MEMORANDUM OF UNDERSTANDING (MOU)

POWER SWITCHING LIMITATION POLICY AT KSC/CCAFS SPACEPORT

[Supersedes MOU SFOC-GEN-005/JBOSC-MULTI-005)

I. **INTRODUCTION:** Florida Power and Light, the Institutional Support Contractor (ISC) and the Infrastructure Operations and Maintenance Services (IOMS) contractor require a Memoran-dum of Understanding (MOU) between all Spaceport contractors performing power-switching operations at Kennedy Space Center (KSC) and Cape Canaveral Air Force Station (CCAFS). It is considered beneficial to the Government for these contractors to enter into this MOU to establish the procedures to be followed for all power-switching operations at KSC and CCAFS. Nothing in this MOU changes the contractors' obligations under their respective con-tracts nor creates a contractual relationship between the parties. Except for the requirements as specified in this MOU, no party shall have any other obligations to the others as a result of this MOU.

II. **PURPOSE:** The purpose of this MOU is to establish a power-switching limitation policy for high-voltage and medium-voltage switching of the Power Transmission (115-kV) and Distribu-tion (15-kV) System affecting space launch facilities, payload processing facilities, and asso ciated support systems operated or maintained by Spaceport contractors.

III. **SCOPE:** This MOU consists of the Basic MOU and three (3) attachments.

III.a Basic MOU: The basic MOU provides a basic overview of general policy information. Approval is by executive management of the participating contractors.

III.b Attachments: Each Attachment addresses the specific switching policies and responsi-bilities between the participating contractors. Approval is by management of the partici-pating contractors. Attachments are standalone agreements to the basic MOU but con-sidered part of the basic MOU.

IV. **PRECEDENCE:** In the event of conflict between the requirements of this MOU and those of the current Government contracts, the terms, conditions, and other provisions of the Govern-ment contracts shall take precedence.

V. **REVIEW/EFFECTIVITY:** This MOU is to be reviewed as required, and changes made to keep it up to date. Revisions may be initiated by any participating contractor by contacting the Florida Power and Light account representative. Any changes to this MOU must be coordi-nated between all the involved organizations.

VI. GENERAL POLICY INFORMATION

VI.a Anyone requiring FPL switching support, shall contact the KSC Power Coordinators, if the switching is on KSC, or the IOMS Power Coordinators if the switching is on CCAFS.

KSC: (321) 867-7300 or Eagle Control on Net 301/101 (OIS-JSEP)

CCAFS: (321) 853-2204 or Dispatch on Utility Net 2

FPL Transmission Load Dispatch: (305) 442-5739

FPL North Area Distribution RCC (Reliability Control Center): (941) 331-4062

VI.b United Launch Alliance (ULA) is responsible for operation of the ULA Delta IV substation and downstream distribution. The ULA Delta IV substation downstream switching devices rated 480 V or less is excluded from this MOU. The ULA Delta IV substation and downstream distribution rated 13.2 kV is to comply with the provisions of the current Cape Bulletin, Protection of Critical Facilities and Utilities during Launch Critical Days.

VI.c FPL is responsible for Lighthouse substation switching activities affecting both the 115-kV and 13.2-kV systems. OSL is responsible for the 13.2-kV system once it leaves the substation property and downstream distribution. The OSL operated downstream switch-ing devices rated 4,160 V or less are excluded from this MOU. The FPL Lighthouse sub-station 115-kV and 13.2-kV systems are to comply with the provisions of the current Cape Bulletin, Protection of Critical Facilities and Utilities during Launch Critical Days.

VII. FORMS AND REFERENCES

VII.a Cape Bulletin 09-01, Protection of Critical Facilities and Utilities During Launch Critical Days (subsequent revisions/changes to this document are incorporated).

VIII. DEFINITIONS

VIII.a **Primary Switching:** Switching of a device that is a part of the high-voltage (115-kV) or medium-voltage (15-kV) power system supplied by the substations at KSC or CCAFS. This does not include switching of any medium-voltage distribution lines supplied directly from Florida Power & Light's distribution system (e.g. Gate 3, Gate 4, Kennedy Area Recreational Services Park, etc).

VIII.b **Spaceport Customers:** Spaceport Customers are defined as follows:

VIII.b.1 **NASA** (National Aeronautics and Space Administration).

VIII.b.2 **United States Air Force**.

VIII.c **Spaceport Contractors:** For the purposes of this agreement, the term Spaceport Contractors includes all entities responsible for operations and maintenance of the high-voltage (115-kV) and/or medium-voltage (15-kV) power distribution systems located on CCAFS and KSC. These entities include the following:

VIII.c.1 EG&G: This Spaceport Contractor receives 115 kV electrical service and operates the distribution systems at, and downstream of, the C-5 and Orsino substations.

VIII.c.2 InDyne, Inc.: This Spaceport Contractor receives 115 kV electrical service and operates the distribution systems at, and downstream of, the South, North, and Titan substations.

VIII.c.3 United Launch Alliance (ULA): This customer receives 115 kV electrical service and operates the distribution system at the Delta substation.

VIII.c.4 Office of Space Launch (OSL): This customer receives 13.2 kV electrical service and operates the distribution system fed from Lighthouse substation.

VIII.d Sub-contractors: For the purposes of this agreement, the term sub-contractor includes all entities performing work on the power distribution systems that are maintained by the Spaceport Contractors. This term excludes the Spaceport Contractor itself when the entity is performing work on its own system.

VIII.e KSC Critical Loop: The following substations and the line sections feeding these substations are considered part of the KSC critical loop for the purposes of this agreement (see figure 1):

VIII.e.1 C-5 Substation

VIII.e.2 Orsino Substation

VIII.e.3 Grissom (Air Liquide) Substation

VIII.f CCAFS Critical Loop. The following substations and the line sections feeding these substations are considered part of the CCAFS critical loop for the purposes of this agree-ment (see figure 1):

VIII.f.1 South Cape Substation

VIII.f.2 Lighthouse Substation

VIII.f.3 North Cape Substation

VIII.f.4 Delta Substation

VIII.f.5 Titan (624A) Substation

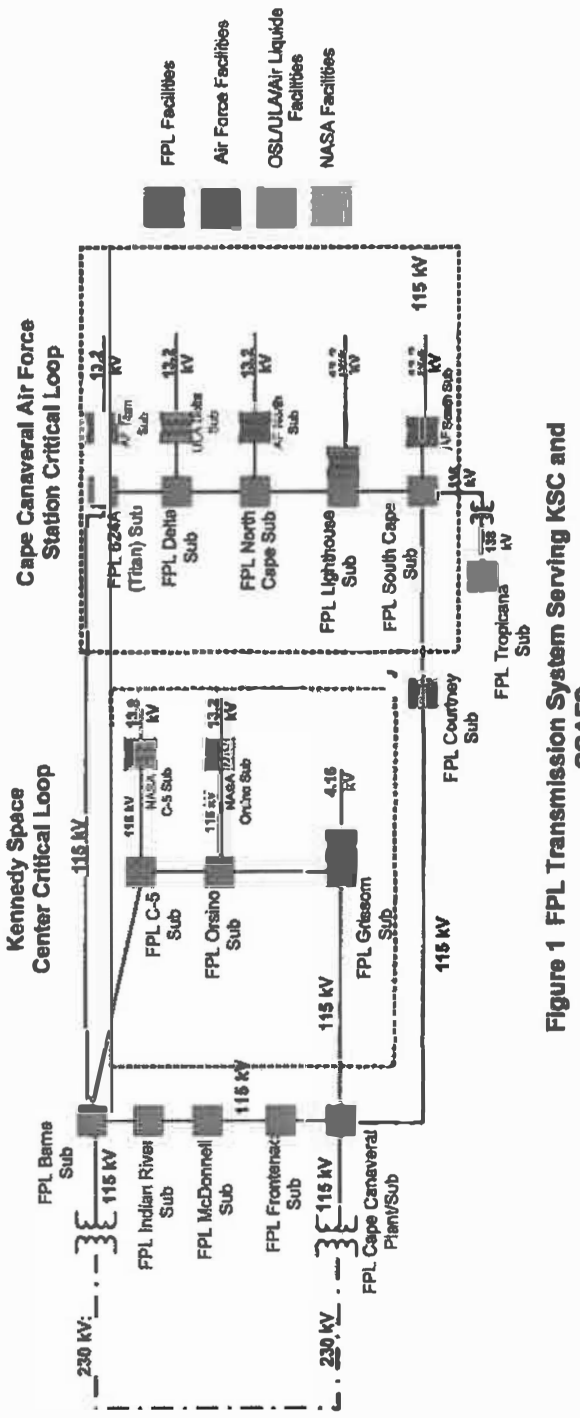

Figure 1 FPL Transmission System Serving KSC and CCAFS

INDEX OF ATTACHMENTS

Attachment No.	Title	Date
1	ISC/IOMS/FLORIDA POWER & LIGHT 115-KV TRANSMISSION SWITCHING POLICY AT CCAFS AND KSC	31 July 2009
2	IOMS/ULA/FPL 115-KV SWITCHING POLICY AT FPL SUBSTATION 842 AND THE ULA DELTA IV SUBSTATION	31 July 2009
3	IOMS/OSL/FPL 115-KV AND 13.2-kV SWITCHING POLICY AT FPL LIGHTHOUSE SUBSTATION	31 July 2009

APPROVED:



EG&G Technical Services, Inc
Institutional Services Contract

TITLE: **ISC/IOMS/FLORIDA POWER & LIGHT 115-KV TRANSMISSION SWITCHING POLICY AT CCAFS AND KSC**

I. POLICY

I.a The purpose of this agreement is to establish a communication and control policy for 115-kV switching on the transmission lines providing power to CCAFS and KSC. These transmission lines are operated and maintained by FPL. Reference the attached single-line diagrams of the FPL transmission system serving CCAFS (figure 3) and KSC (figure 2).

II. PROCEDURES

II.a Switching will not be performed on the respective 115kV loop (KSC and/or CCAFS) on critical days, as defined by the Launch Operations Forecast. This schedule will be provided to FPL via e-mail by ISC and IOMS weekly, or as changes occur.

II.b IOMS and ISC Power Coordinators communicate critical days to the FPL Dispatcher using the forecasted Launch Operations Forecast. This is the document recognized by FPL to identify critical days. Launch increase significantly with the addition of SpaceX

II.c FPL Dispatcher will coordinate with the IOMS and ISC Power Coordinator all switching associated with the transmission loops, regardless of critical and non-critical periods. The primary method of this communication is via the FPL Hot Line (Hoot and Holler). It rings, and can be monitored simultaneously at both the CCAFS and KSC Power Dispatch Offices.

KSC: (321) 867-7300 or Eagle Control on Net 301/101 (OIS-JSEP)

CCAFS: (321) 853-2204 or Power Dispatch on Utility Net 2

FPL Transmission Load Dispatch: (305) 442-5739

II.d FPL is responsible for maintaining redundant transmission configuration (i.e., closed loop) to CCAFS and/or KSC substations during identified critical days.. Reference single-line diagrams (figures 2 & 3) for the closed-loop configuration recognized during critical days.

II.e The following substations are on a Commercial Industrial Load Control rate and are available for FPL to control when FPL is controlling load; C-5, Orsino, South Cape, North Cape. During critical loop periods, it is the Customer's responsibility to disable the com-munications link to FPL's load dispatch offices to insure they are not controlled. It is the Customer's responsibility to re-enable the communications link immediately after the loop is again non-critical.

II.f Emergency 115-kV switching that is required because of anomalies, mishaps, or **unscheduled outages** on the CCAFS and KSC transmission loops will **not** require prior approval **but must be reported immediately to the appropriate KSC and CCAFS Power Coordinator.**

II.g **ALL SUB-CONTRACTORS desiring FPL switching support shall contact the ISC Power Coordinators office for switching support in EG&G operated substations and the IOMS Power Coordinators office for switching support in InDyne, Inc. operated substations.**

III. Transmission Switching at KSC Substations:

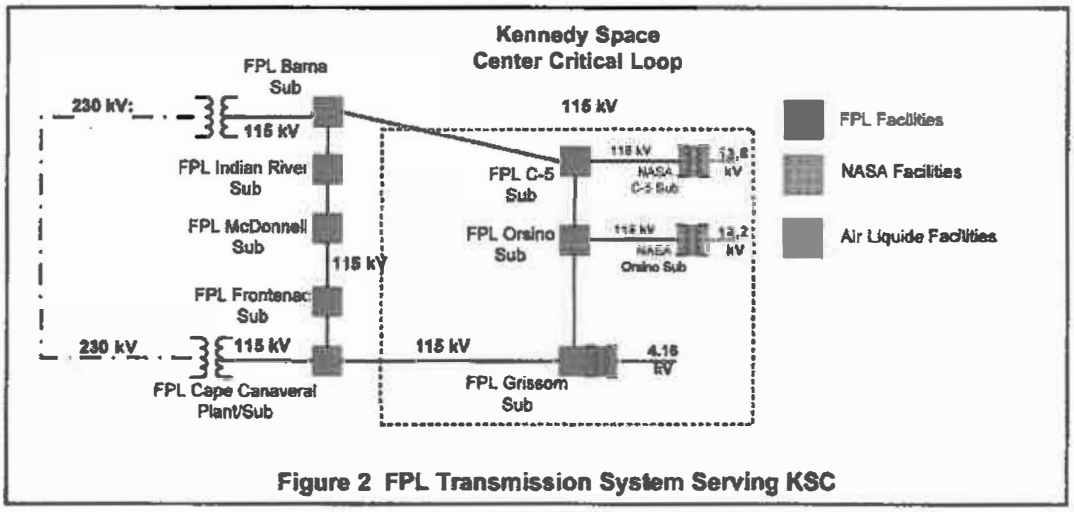

Figure 2 FPL Transmission System Serving KSC

III.a The 115-kV transmission lines at KSC substations are operated and maintained by FPL. Reference Figure2 for a single-line diagram of the FPL transmission system serving KSC.

III.b The following is the sequence of events to effect all requests for substation work

b.1 Sub-contractors desiring KSC substation switching operations shall contact the ISC Power Coordinators. Sub-contractors making switching requests directly to FPL shall be directed by FPL personnel to contact ISC Power Coordinators. No action shall be initiated by FPL based solely on sub-contractor requests except in the event of an emergency.

III.b.2 ISC Power Coordinators shall request work clearances from FPL upon receipt of the sub-contractor switching request.

III.b.3 Upon receipt of an FPL-issued clearance for work, ISC Power Coordinators shall issue a work permit to the sub-contractor.

III.b.4 The sub-contractor shall return the work permit to the ISC Power Coordinator upon completion of work.

III.b.5 ISC Power Coordinators shall release the clearance back to FPL upon closure of the work permit.

IV. 115-kV Transmission Switching at CCAFS Substation

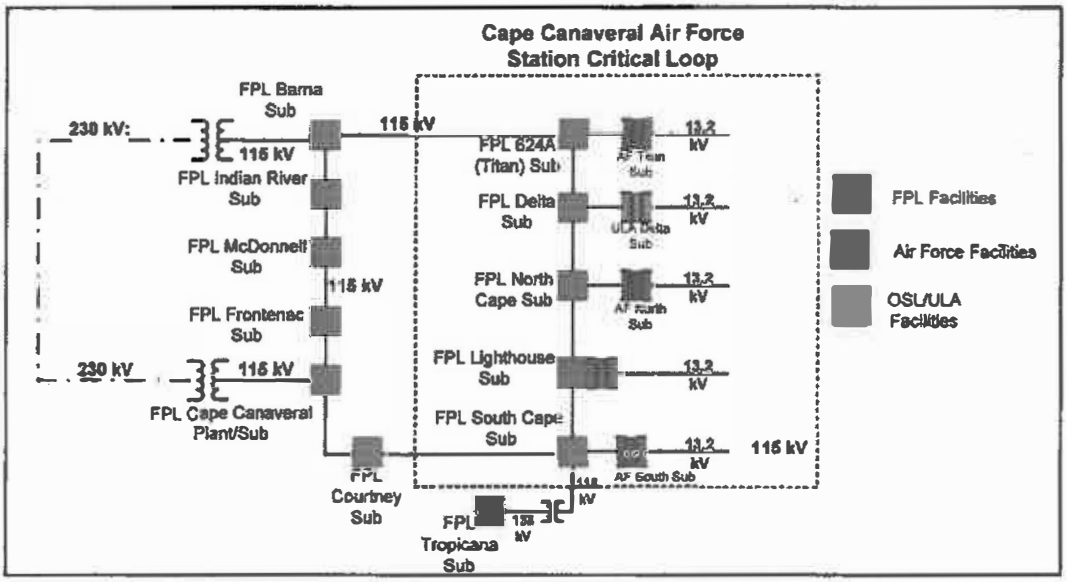

Figure 3 FPL Transmission System Serving CCAFS

IV.a The 115-kV transmission lines at CCAFS substations are operated and maintained by FPL. Reference Figure 3 for a single-line diagram of the FPL transmission system serving CCAFS.

IV.b The following is the sequence of events to effect all requests for substation work:

IV b.1 Sub-contractors desiring CCAFS substation switching operations shall contact the IOMS Power Coordinators. Sub-contractors making switching requests directly to FPL shall be directed by FPL personnel to contact IOMS Power Coordinators. No action shall be initiated by FPL based on sub-contractor requests except in the event of an emergency.

IV.b.2 IOMS Power Coordinators shall request work clearances from FPL upon receipt of the sub-contractor switching request.

IV.b.3 Upon receipt of an FPL-issued clearance for work, IOMS Power Coordinators shall issue a work permit to the sub-contractor.

IV.b.4 The sub-contractor shall return the work permit to the IOMS Power Coordinator upon completion of work.

IV.b.5 IOMS Power Coordinators shall release the clearance back to FPL upon closure of the work permit.

FPL/ISC/IOMS CONCURRENCE SIGNATURE SHEET

FPL CONCURRENCE:

ISC/EG&G CONCURRENCE:



TITLE: IOMS/ULA/FPL 115-KV SWITCHING POLICY AT FPL SUBSTATION 842 AND THE ULA DELTA IV SUBSTATION

I. POLICY

I.a The purpose of this agreement is to establish a policy for 115-kV switching at Substation 842, operated by FPL, and the adjacent ULA Delta IV/Atlas V substation, operated by United Launch Alliance (ULA). This agreement also establishes a policy for 15-kV switching and automation control between the CCAFS Switch Station 37 (SS37) switchgear and the Delta IV Beach Road PCC (facility # 38105).

II. PROCEDURES

II.a 115-kV switching at FPL Substation 842 (Delta) affects the configuration of the 115-kV loop (i.e., "breaks" or "makes" the loop). 115-kV switching at the ULA Delta IV substation connects or disconnects load from the 115-kV loop regardless of loop configuration.

II.a.1 No 15-kV or 115-kV switching will be performed during launch critical days, except for an emergency.

II.a.2 ULA is responsible for switching instructions and switching operations at the ULA Delta IV substation and downstream distribution. ULA will coordinate with and notify IOMS of all 15-kV and 115-kV switching operations.

II.a.3 ULA will coordinate through IOMS all required switching at FPL's Delta substation including time and switching required. This switching, which "breaks" the 115-kV loop, is required for certain maintenance at the ULA Delta IV substation.

II.b A 15-kV interconnection exists between SS37 and the Delta IV Beach Road PCC. The purpose of this interconnection is to supply the Delta IV Beach Road PCC a third source of power during days deemed launch critical for the Delta IV EELV program by the 45th Space Wing. An automation scheme controls this interconnection when supporting the Delta IV EELV program during these launch critical days. When the automation scheme is enabled, the 15-kV tie breaker (11B) will be used to automatically supply power to the Delta IV Beach Road PCC 15-kV bus in the event of a loss of power from the Delta IV Substation breakers 5B and 2B. Caution must be taken to never tie the system at the 15-kV level when the 115-kv loop is open between The North Cape Sub and the FP&L Delta Sub.

II.b.1 No 15-kV switching will be performed during any launch critical days, except for in an emergency,

II.b.2 ULA is responsible for switching instructions and switching operations at the ULA Delta IV substation, and downstream distribution including the Beach Road PCC. ULA will coordinate with and notify the IOMS Power Coordinator of all 15-kV switching operations.

II.b.3 The interconnection automation scheme can be auto-enable(d) or auto-inhibit(ed) via the CCAFS SCADA system at Hangar R&D. The IOMS Power Coordinators exercise

control of the automation scheme through this SCADA system. Upon the onset of launch critical days for the Delta IV EELV program, ULA will contact the IOMS Power Coordinators and request that the automation scheme be placed in auto-enable(d).

II.b.4 Upon completion of launch critical days for the Delta IV EELV program, ULA shall contact the IOMS Power Coordinators and request that the automation scheme be placed in auto-inhibit.

II.b.5 The IOMS Power Coordinators will not place the automation scheme in auto-inhibit during launch critical days for the Delta IV EELV program without ULA consent.

II.b.6 The IOMS Power Coordinators may place the automation scheme in auto-inhibit upon completion of launch critical days for the Delta IV EELV program without ULA consent.

II.b.7 The 15-kV tie may be used to supply power to the Delta IV Beach Road PCC from SS37 during non launch critical days by mutual agreement between ULA and In-Dyne.

II.b.8 The 15-kV tie may be used to supply power to SS37 from the Delta IV Beach Road PCC during non launch critical days by mutual agreement between ULA and In-Dyne.

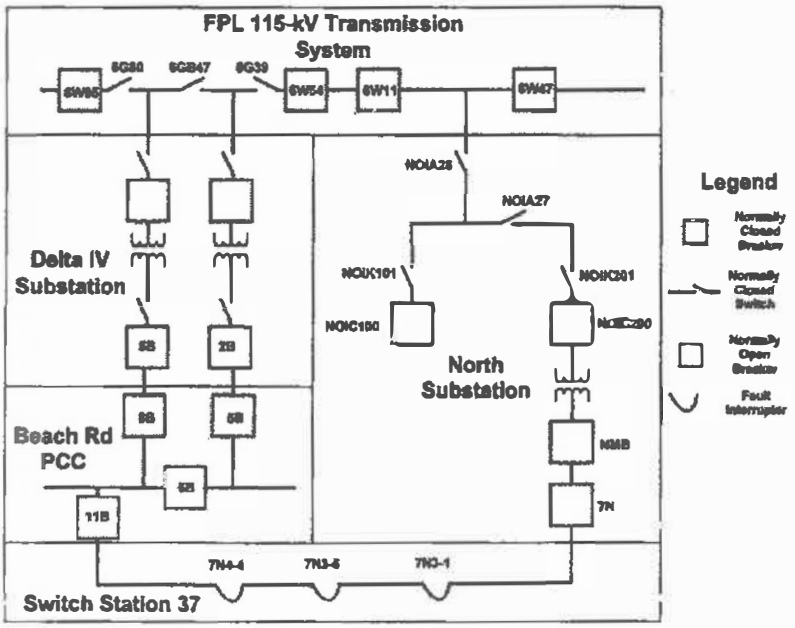

Figure 4 Delta-North Substation Tie, One-Line Diagram

ULA/FPL/IOMS CONCURRENCE SIGNATURE SHEET

ULA CONCURRENCE **IOMS/INDYNE CONCURRENCE**



TITLE: FPL/OSL/IOMS 115-KV AND 13.2-kV SWITCHING POLICY AT FPL LIGHTHOUSE SUBSTATION

I. POLICY

I.a The purpose of this agreement is to establish a policy for 115-kV and 13.2 kV switching at Lighthouse Substation.

II. PROCEDURES

II.a No 13.2 kV or 115-kV switching will be performed during launch critical days, except for an emergency,

II.b Emergency 115-kV and 13.2 kV switching performed during critical days will be in accordance with the basic MOU's Section VI, General Policy Information, and Cape Bulletin, Protection of Critical Facilities and Utilities during Launch Critical Days.

II.c FPL is responsible for all switching (115 kV & 13.2 kV) instructions and switching operations at Lighthouse Substation.

II.d OSL is responsible for switching instructions and operations of the 13.2 distribution system after it leaves Lighthouse substation.

II.e OSL will notify IOMS Power Coordinators of all FPL switching/support needed at Lighthouse substation.

II.f After receiving concurrence from the IOMS Power Coordinators, OSL will contact the FPL Distribution Dispatch offices (RCC) and/or the FPL Account Manager, (321) 726-4947 to schedule the work.

CCAFS/IOMS Power Coordinators: (321) 853-2204 or Dispatch on Utility Net 2

FPL North Area Distribution RCC (Reliability Control Center): (941) 331-4062

II.g Upon receiving the support request, FPL shall coordinate directly with OSL the specific work requirements and related clearance issues. IOMS Power Coordinators will continue to be copied on communications and activities at Lighthouse substation.

II.h FPL and OSL will notify the IOMS Power Coordinators upon completion of the activities at Lighthouse substation.

FPL/IOMS/OSL CONCURRENCE SIGNATURE SHEET

OSL CONCURRENCE **IOMS/INDYNE CONCURRENCE**

