FLIGHT READINESS STATEMENT
STS-88/ET-97
EXTERNAL TANK PROJECT
PRE-FLIGHT REVIEW

EXTERNAL TANK ET-97/STS-88, AS IDENTIFIED IN THE EXTERNAL TANK PROJECT PRE-FLIGHT REVIEW DATED OCTOBER 22, 1998, IS CONSIDERED READY TO SUPPORT FLIGHT UPON ACCEPTABLE DISPOSITION OF OPEN/PLANNED WORK AND/OR OPEN ACTIONS.

for E. C. SMITH/EB01

J. L. LUSK/EE31

A. F. WHITAKER/EH01

for A. O. GOODSON/CR01

J. W. KILPATRICK/EL01

B. E. GOLDBERG/ED01

M. D. SMILES/CR70

P. V. COUNTS/SA31, CHAIRMAN

ANY SMRB'S ON

October 22, 1998

Space Shuttle
External Tank

STS-88/ET-97
Pre-Flight Review

*1 ACTION: PVC SET UP SEPARATE REVIEW WITH RECHRDS TO OUT-OF-SPEC

*2 ACTION LM JIM FEELEY BLACK/WHITE CHART CLOSURE STATING THAT OUT-OF-SPEC CONDITION IS NO IMPACT FOR FLIGHT (RATIONALE FOR FLIGHT)

ATTACH TO MINUTES OF THIS FRR

REMOVE REALLOCATION CHARTS FROM MAIN LINE PATCH. KEEP AS A BACKUP CHART FOR A LEVEL III ROAD MAP

PVC CONSIDER NO LEVEL I FOR ON SMALL INDICATIONS SINCE THEY WERE FIRST BRIEFED TO LEVEL I FOR FOR 1ST INDICATION TO BE FLOWN (ET 98/STS 95)

ACTION FEELEY ADD TWO ITEMS TO INDICATION'S BACKGROUND

1) DOCUMENT REVIEW W/ HOLLOWAY - GLEN ECORD ETAL
2) STATE PROBABILITY OF DETECTION RATES

*3 ACTION TPS

1) ADD PDL RADIARS
2) ADD RATIONALE FOR FLIGHT LIKE ET 98

OPEN LEVEL III WAIVER

ET97pfr.4250.ls.10/98

Agenda

• ***Overview***	***Jim Feeley***
• ***Current Mission/External Tank Highlights***	
• ET-97 Mass Properties Status	Rick Spring
• Changes	
• Senior Management Review NCD	Presented as Special Topic
• Special Topics	
• SRM&QA Assessment	Terry McKeough
• KSC Processing	Bill Brandow
• Verification/Certification	Jim Feeley
• Mission Unique Assessment	
• Readiness Statement	
• Appendices	
• A: Minor Changes	
• B: SRM&QA Assessment	
• C: KSC Processing	
• D: Previously reviewed material	

Overview

- This review for STS-88/ET-97 includes:
  - Items specific to mission STS-88
  - First time changes, differences and "out of family" non-conformances not previously flown and/or reviewed

- **FRR Series**

- ET/SRB Mate Review	09/16/98
- Pre-flight Review	10/22/98
- Space Shuttle Vehicle FRR	11/23/98
- Mission Management Team (L-1 Day)	12/02/98

Mission/External Tank Highlights

STS-88/ET-97, 12/03/98

Mission	**STS-88**
• Launch	12/03/98
- Window	0445-0455 EST
- Pad	A
- Orbiter	Endeavour (OV-105)
- Orbital inclination	51.6° - Insertion at 173 NM
- ET photo coverage	• Crew photos from cockpit window • Umbilical well cameras
• Primary payload	ISS-2A
• Landing	12/14/98
- Time	2314 EST
- Location	KSC

External Tank	**ET-97**
• DD250 acceptance	3/30/98
• Shipped to launch site	4/02/98

ET97pfr.4250.ls.10/98

Agenda

• Overview	Jim Feeley
• Current Mission/External Tank Highlights	
• ***ET-97 Mass Properties Status***	***Rick Spring***
• Changes	
• Senior Management Review NCD	Presented as Special Topic
• Special Topics	
• SRM&QA Assessment	Terry McKeough
• KSC Processing	Bill Brandow
• Verification/Certification	Jim Feeley
• Mission Unique Assessment	
• Readiness Statement	
• Appendices	
- A: Minor Changes	
- B: SRM&QA Assessment	
- C: KSC Processing	
- D: Level II Waivers/Level III Devations	

ET97pfr.4250.ls.10/98

ET-97 Mass Properties Status

Issue:

- ET-97 Weight Status (predicted vs. as-weighed)

Background:

- The specification weight for ET-97 is 57,911 lbs
- The nominal control weight for SLWT is 58,005±511 lbs
  - ET-97 was weighed 4/14/98
    - Predicted 57,819 lbs
    - As-weighed 58,244 lbs
    - Delta + 425 lbs
- ET-97 predicted weight meets specification weight requirement
- ET-97 as-weighed weight meets control weight requirement
- ET-97 as-weighed weight exceeded specification weight by 333 lbs
- Revisions to the weight prediction methodology in work to account for delta between predicted and as-weighed weight
  - C/S J31199 Major Assembly Weighing Activity
- CR S060513L is being processed which will revise current control weight to 58,505 ±511 lbs

ET97ptr.4250.ls.10/98

Propellant Tank Reallocations

J31195/J31195A

Change:

- Reallocated ET-98 LO2 Tank to ET-97

Background/ Reason:

- Management decision to reallocate tanks
  - Standard Procedure 49:12
- Earliest available hardware allocated to first delivered effectivities
  - ET-98 LO2 tank passed proof test before ET-97 LO2 tank

Propellant Tank Reallocations

J31195/J31195A

Summary of SLWT Tank Allocations

			ET As Built		
Mission	**Date**	**ET DD250**	**LO2**	**LH2**	**I/T**
STS-91	**06/02/98**	**96**	**96**	**96**	**96**
STS-95	10/29/98	98	97	99	98
STS-88	*12/03/98*	*97*	*98*	*97*	*97*
STS-93	01/21/99	99	99	98	99
STS-96	05/13/99	100	101	100	100
STS-92	06/17/99	101	102	101	101
STS-97	08/05/99	102	100	102	102
		103	103	103	103

Bold = Missions/Tanks flown
Shaded = Planned Missions

ET97pfr.4250.ls.10/98

Propellant Tank Reallocations

J31195/J31195A

Basis for Certification:

Test	Analysis	Similarity	Inspection
X		X	X

- Test/Inspection
  - Methodology: Fracture based proof test and inspection ensures all undetected flaws will not cause failure in 4 mission lives (as demonstrated by coupon testing)
  - Results:
    - Successful proof test demonstrated performance consistent with fracture test program
- Similarity
  - Design requirements identical
  - All parts are either identical or incorporate minor changes that have no effect on form, fit or function
    - No COQ or HCS impacts

Implementation of Dual Cover Pass

J31188

Change:

- Implemented dual cover pass weld process on the LO2 tank O3 and O4 welds

Background/ Reason:

- High incidence of pre- and post-proof cracks on circumferential welds at longitudinal weld intersections
- Dual cover pass reduces sensitivity to intersection cracking and subsequent repairs
  - Eliminates the residual stress element associated with cross-over cover passes
- Implemented on STS-95/ET-98 at several locations
  - LO2 tank: O5 weld
  - LH2 tank: H1 thru H8 welds

Implementation of Dual Cover Pass

J31188

Implement Dual Cover Pass on STS-88/ET-97 O3 and O4 Welds

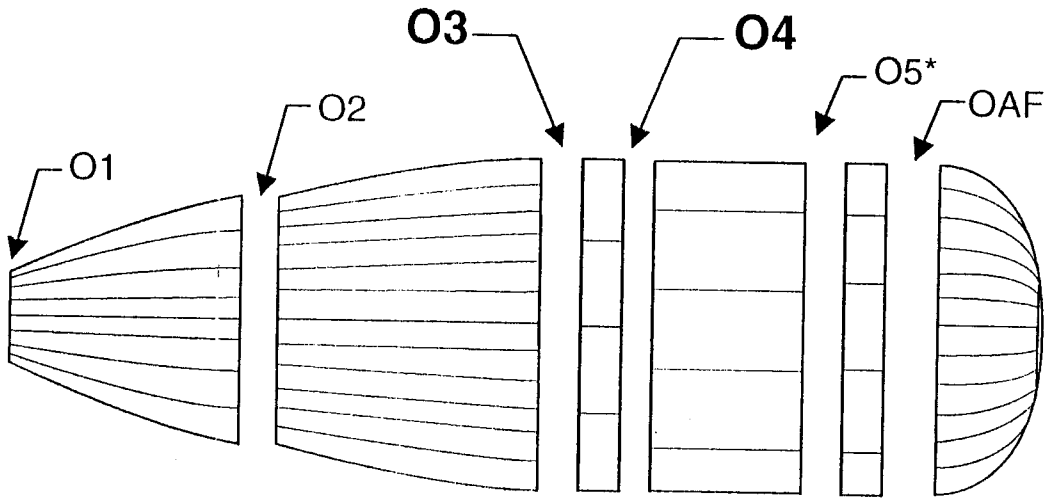

Was:

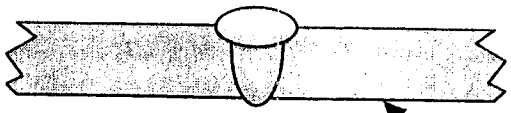

Now:

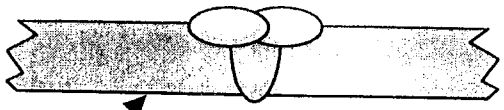

Inner Skin Line (ISL)

- Single Cover Pass
- Dual Cover Pass

* Previously implemented on STS-95/ET-98

ET97ptr.4250.ls.10/98

Implementation of Dual Cover Pass

J31188

Basis for Certification:

Test	Analysis	Similarity	Inspection
X	X		X

- Test/Inspection
  - Methodology: Fracture based proof test and inspection ensures all undetected flaws will not cause failure in 4 mission lives (as demonstrated by coupon testing)
  - Results:
    - Successful proof test demonstrated performance consistent with fracture test program
    - Demonstrated load capability in proof greater than 100% of flight limit load (O3,O4: 118%-220%)
  - Dual cover pass weld allowables and weld certification developed
    - Allowables met or exceeded those for single cover pass
      - Design allowables remain unchanged
      - Factor of safety analysis unchanged for certification of dual cover pass weld programs

ET97pfr.4250.ls.10/98

Implementation of Dual Cover Pass

J31188

Basis for Certification (continued):

- Analysis
  - Methodology: NASTRAN, BOSOR, Weld Margin Programs
  - Requirements/Results:
    - Weld Factors of Safety unchanged
    - No change in weld design allowables

Agenda

• Overview	Jim Feeley
• Current Mission/External Tank Highlights	
• ET-97 Mass Properties Status	Rick Spring
• Changes	
• ***Senior Management Review NCD***	***Presented as Special Topic***
• ***Special Topics***	
• SRM&QA Assessment	Terry McKeough
• KSC Processing	Bill Brandow
• Verification/Certification	Jim Feeley
• Mission Unique Assessment	
• Readiness Statement	
• Appendices	
• A: Minor Changes	
• B: SRM&QA Assessment	
• C: KSC Processing	
• D: Previously reviewed material	

Special Topics

Description	Presenter
• ODG Post Proof NDE Indications	Don Bolstad
• LH2 Tank Post Proof X-Ray Indications *	
• Intertank Thrust Panel Foam Loss (IFA STS-87-T-01)	Jim Feeley

* *Senior Management Review NCD*

ODG Post Proof NDE Indications

Issue:

- Acceptance of lack of fusion indications on LO2 tank ODG (LO2 tank dome gore) welds

Background:

- Faint linear indication was noted on both sides of ODG-7 weld during post proof X-ray on ET-98 LO2 tank
- Examination of weld with ultrasonic testing (UT) revealed a flat bottom defect (interpass lack of fusion)
  - Approximately 0.20" wide and 15" long
  - NCD disposition was to repair, planish and reproof
- Following ET-98 detection and repair, similar indications were found by UT on ET-97
  - No x-ray indication
- Discovery led to extensive investigation on cause of defect, potential structural impacts, and corrective actions

ODG Post Proof NDE Indications

Discussion:

- Post proof inspection (UT) of the ET-97 LO2 tank detected defects on ODG-6 and ODG-7 welds
- Cause determined to be interpass (I/P) lack of fusion
  - Cover pass did not completely fill the gap between the penetration pass and adjacent weld land
- Structural assessment shows the defect orientation is such that they have no impact to tensile or fracture strength as long as not detectable by x-ray
  - ET-97 ODG-6 and ODG-7 defects were not a threat and were candidates for use-as-is
- Weld defect cause is well understood
- Corrective action initiated
  - Penetration pass modified to eliminate deep gap
  - Depth of cover pass increased
- MAF and MSFC Fracture Control Boards concurred on use-as-is dispositions

ODG Post Proof NDE Indications

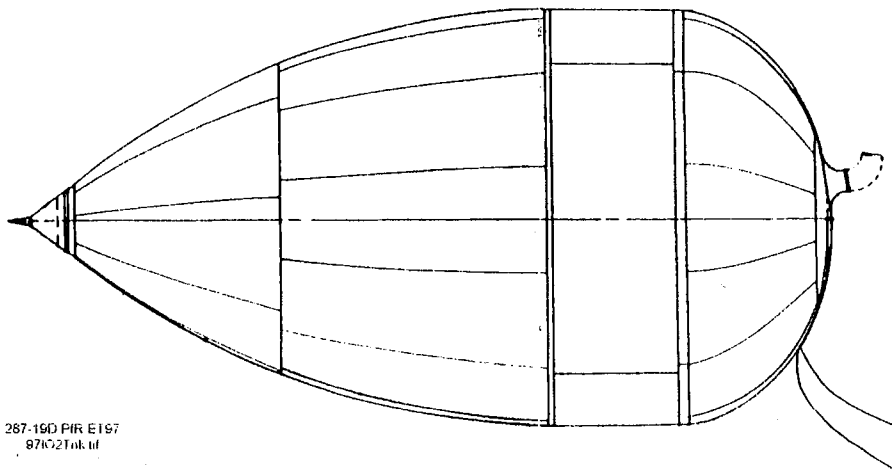

LO2 Tank

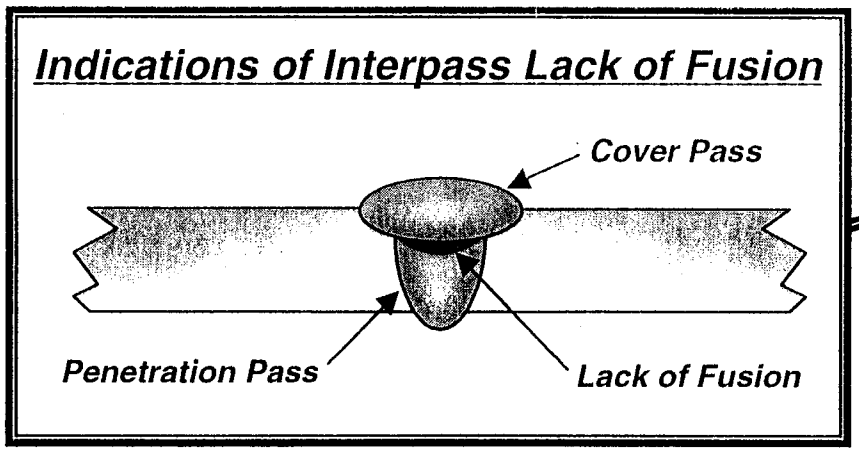

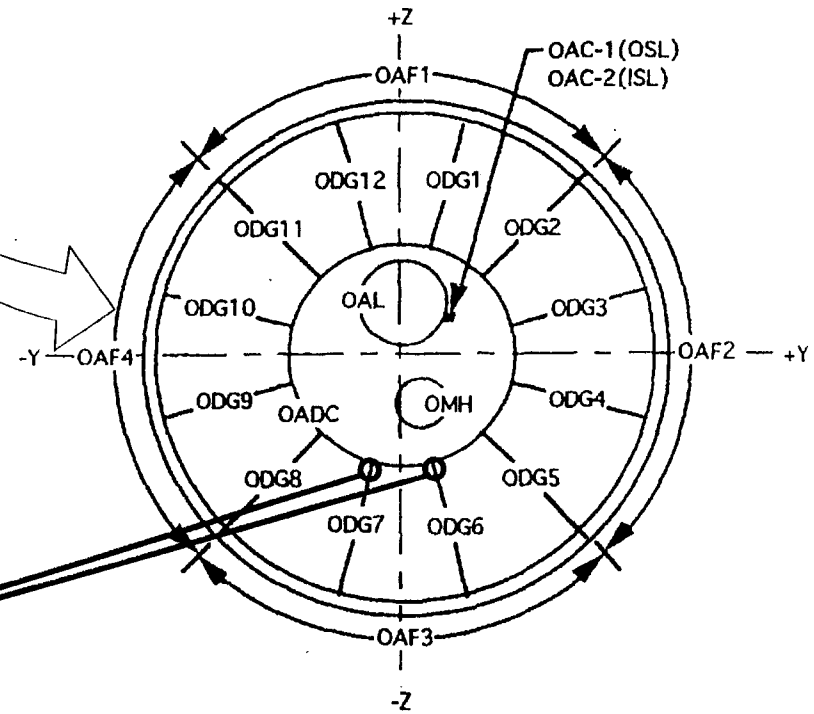

LO2 Aft Dome

ET97pfr.4250.ls.10/98

ODG Post Proof NDE Indications

Basis for Certification:

Test	Analysis	Similarity	Inspection
X	X		X

- Test/Inspection
  - Methodology:
    - Reviewed existing test data
    - Performed 86 room temperature and 37 cryogenic tensile tests
    - Performed 74 simulated service tests
  - Results
    - Assessment shows no impact on tensile and fracture strength
    - Successful proof and post proof NDE
- Analysis
  - Correlated test specimen results with NDE indications (x-ray and UT)
    - Established conservative criteria for acceptance of UT indications
      - X-ray indication: repair weld
      - No x-ray indication: use-as-is

ET97pfr.4250.ls.10/98

LH2 Tank Post Proof X-Ray Indications

Issue:

- Acceptance of small x-ray indications on LH2 tank H4 and H6 welds

Background:

- Two linear indications detected by x-ray after ET-97 LH2 tank proof test
  - H4 weld @ 779" 0.045" indication
  - H6 weld @ 390" 0.030" indication
- Because of the small size of the indications, an analysis performed to determine suitability of use as is disposition
- MAF and MSFC Fracture Control Boards approved indications "use-as-is"

ET97pfr.4250.ls.10/98

LH2 Tank Post Proof X-Ray Indications

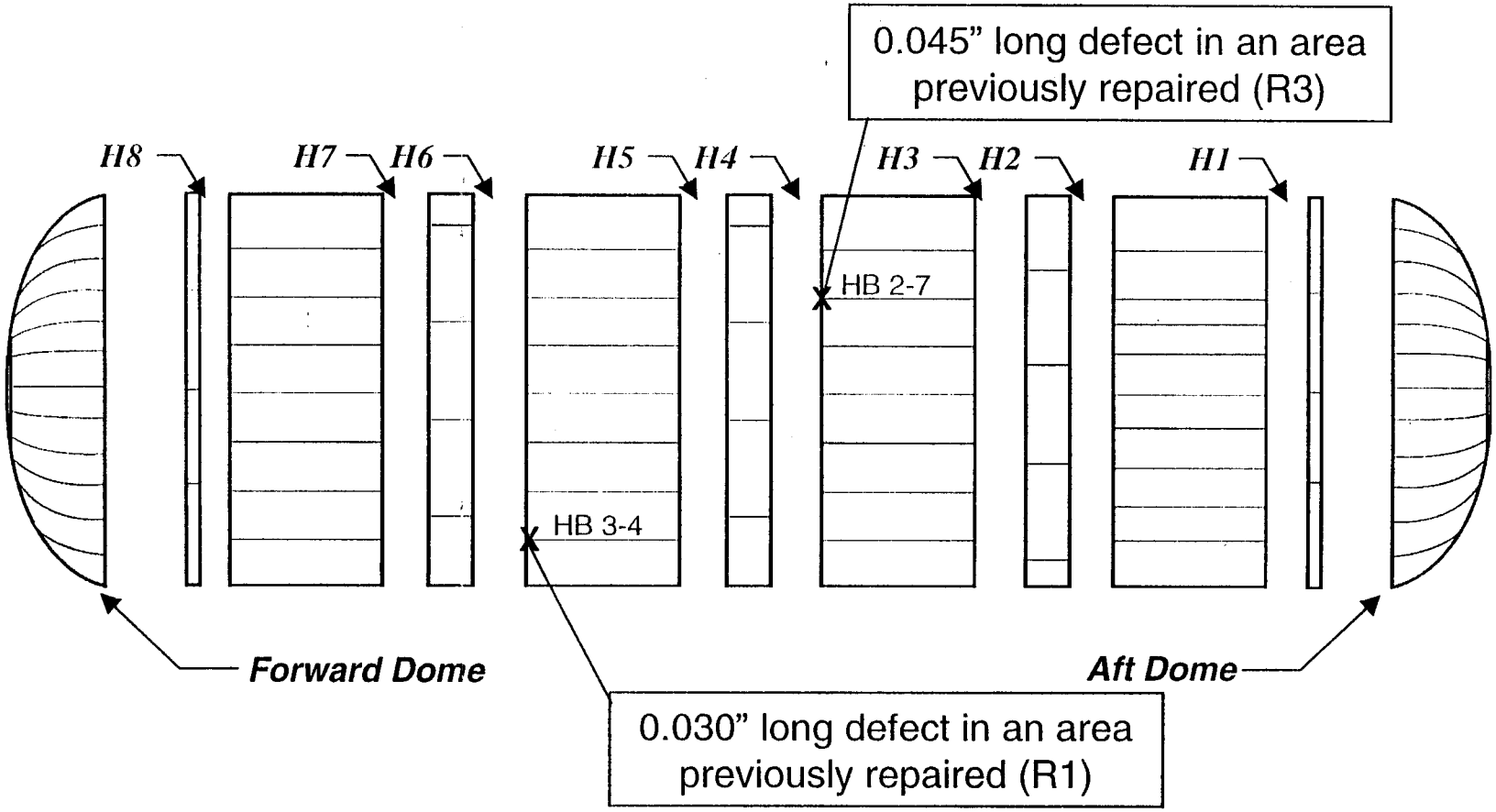

ET97pfr-4250.ls.10/98

LH2 Tank Post Proof X-Ray Indications

Basis for Certification:

Test	Analysis	Similarity	Inspection
X	X	X	X

- Analysis
  - Methodology: JSC FLAGRO fracture analysis program
    - Assumes worst case orientation for flaw
    - Assumes worst-case stresses (outer fiber stress used as thru-the-thickness stress)
    - Assumes reported flaw size is 2x in mission life prediction
  - Results:
    - Critical flaw size $\geq$ 0.500"
    - > 1000 mission lives

ET97pfr.4250.ls.10/98

LH2 Tank Post Proof X-Ray Indications

Basis for Certification (continued):

- Test/Inspection
  - Methodology: Fracture based proof test and inspection ensures all accepted flaws will not cause failure in 4 mission lives (as demonstrated by coupon testing)
  - Results
    - Successful proof test demonstrated performance consistent with fracture test program
      - H6: Minimum108% limit load demonstrated in proof
      - H4: Minimum 97% limit load demonstrated in proof
    - Successful proof and post proof NDE
    - Over 600 fracture tests with Al 2195
- Similarity
  - LWT program has accepted post proof indications for flight
  - Same discipline used to develop Al 2195 data base as used on Al 2219

Intertank Foam Loss

STS-88/ET-97 Thrust Panel Foam Summary

- NASA and Lockheed Martin Investigation Team continue to work foam loss root cause scenario
  - Definitive cause of foam loss undetermined
  - Aggressive test program underway
- STS-88/ET-97 Intertank foam configuration (machined NCFI 24-124 with SS-1171 circumferential rib closeouts) same as flown on STS-91/ ET-96
  - STS-91 post separation photo resolution not sufficient to assess circumferential rib closeout material (SS-1171) performance
    - Orbiter tile hits > 1"
      - STS-91: 45
      - Average: 13
    - Tile replacement not required
- STS-88/ET-97 material properties comparable to STS-91/ET-96
- Waiver to NSTS 07700, Vol. X approved and waiver to EIS processed to document possible ET debris generation
- No constraint to flight
  - Loss of thrust panel foam loss is not a safety of flight concern
  - Orbiter turnaround maintenance issue only

Intertank Foam Loss

Material Properties Comparison

Foam Property	Requirement	STS-91/ET-96	STS-88/ET-97
• **NCFI 24-124**			
– Tensile	30 psi	40.9 avg (38.2/43.6)	46.9 avg (44.3/49.5)
– Density	2.0 - 2.8 psi	2.40/2.40	2.38/2.42
• **SS-1171**			
– Tensile	35 psi	43.5 avg	42.1
+Y		(44.7/42.3)	(39.7/40.6)
-Y		(44.7/42.3)	(47.1/41.2)
– Density	1.8 - 2.6 psi	2.37 avg	2.75 avg
+Y		2.41/2.34 avg	2.93/3.06 avg *
-Y		2.41/2.34 avg	2.55/2.48 avg

* Non-conformance for density out of specification condition accepted per NCD/MRB

ET97pfr.4250.ls.10/98

Agenda

• Overview	Jim Feeley
• Current Mission/External Tank Highlights	
• ET-97 Mass Properties Status	Rick Spring
• Changes	
• Senior Management Review NCD	Presented as Special Topic
• Special Topics	
• ***SRM&QA Assessment***	***Terry McKeough***
• KSC Processing	Bill Brandow
• Verification/Certification	Jim Feeley
• Mission Unique Assessment	
• Readiness Statement	
• Appendices	
• A: Minor Changes	
• B: SRM&QA Assessment	
• C: KSC Processing	
• D: Previously reviewed material	

ET97pfr.4250.ls.10/98

SRM&QA Assessment

as of 10/20/98

Item	Status
• Alerts	None Open
• MRB Assessment	Complete - No issues/no impact to hazard controls
• Hazard Assessment	Complete - All hazard reports were re-assessed and hazard controls verified
• Corrective Action Problem Summaries (CAPS) - T-067PF, Loss of Intertank SOFI during Ascent of STS-87/ET-89	Closed pending action • Previously discussed as Special Topic

ET97pfr.4250.ls.10/98

KSC Processing - Status

as of 10/20/98

- Discrepancy Reports (DRs)/Problem Reports (PRs) Review
  - All PR/MRB discrepancies/dispositions similar to previously flown vehicles
  - All MRBs have been reviewed by MAF Reliability for potential SMR

- Limited Life Component/ET Status
  - All within required life through scheduled launch date plus 90 days

- OMRSD Exceptions/Waivers: None

KSC Processing - Status

as of 10/20/98

- Changes
  - ET modifications
    - Mod Kits 0
    - DC&R 0
    - Bldg 45 support 1
    - FEC 1
  - OMRSD/LCC 0
  - Software 0

- Temp/Press recordings to ET-97 weighing *
- LO2 Ogive TPS Trim *

- SIM Load (S0044) 10/14/98
- SIM Launch (S0056) 11/11/98

* Previously implemented/flown

Agenda

• Overview	Jim Feeley
• Current Mission/External Tank Highlights	
• ET-98 Mass Properties Status	Rick Spring
• Changes	
• Senior Management Review NCD	Presented as Special Topic
• Special Topics	
• SRM&QA Assessment	Terry McKeough
• KSC Processing	Bill Brandow
• ***Verification/Certification***	***Jim Feeley***
• ***Mission Unique Assessment***	
• Readiness Statement	
• Appendices	
• A: Minor Changes	
• B: SRM&QA Assessment	
• C: KSC Processing	
• D: Previously reviewed material	

ET97pfr.4250.ls.10/98

Verification/Certification

as of 10/20/98

Item	Status
• NSTS 07700, Volume X Baseline - Revision L, Change 246	No Issues
• Certification documentation - Hardware Certification Sheets (HCS) - Certificates of Qualification (COQ)	Complete - No Issues
• Waivers/Deviations - Evidence from prior flights showed Intertank foam loss - Potentially violates "debris prevention" paragraph in Level II and Level III specification	• Level II waiver approved by PRCBD S082962A (10/2/98) • Level III DAR pending MSFC approval

ET97pfr.4250.ls.10/98

Mission Unique Assessment

as of 10/20/98

Category/Item	STS-88
• Review of MRB actions using updated loads	ECD 11/20/98
• MPS Preflight Prediction Package	ECD 11/20/98

Readiness Statement

The External Tank, ET-97, is hereby certified and ready for STS-88 flight pending completion/closure of open and planned work

Terry L. Hibbard

Vice President, External Tank Project
Lockheed Martin Michoud Space Systems

ET97pfr.4250.ls.10/98

Appendices

- A: Minor Changes

- B: SRM&QA Assessment
  - NCD Assessment Criteria

- C: KSC Processing
  - Limited Life Components
  - Modification Summaries/Status
  - Alternate Blowing Agent Usage at KSC
  - Software Changes: None
  - OMRSD Exceptions/Waivers: None
  - OMRSD Changes (RCNs): None

- D: Waivers/Deviations

Minor Changes

B01982AA

Description: Implemented intermediate step in the revision of longeron machining at Sta 1973 interface

Reason: Machining changes implemented to enhance producibility by eliminating cracks in the forging during straightening

Basis for Certification: Similarity

- Longeron basic configuration and critical failure mode unchanged
- Design change provides additional material for producibility which locally increases longeron robustness

Class II or JS/DCN Changes

- All Class I/II JS/DCN changes have been reviewed by MSFC Resident Office
- All Class II STP/STM/Standards changes have been reviewed by MSFC M&P Lab
- These changes are acceptable for flight and summarized in this appendix (presentation not required)
  - Presentation criteria - Selection for presentation based on changes affecting:
    - Processes
    - Configuration
    - Material
    - Alternate Hardware
  - Presentation rejection criteria - All changes that do not affect configuration, material or processes
    - Revise Point of Incorporation
    - Drawing Clarification
    - Non-Flight Hardware Installation/Removal
    - Datum Changes
    - Update Usage/List of Materials (L/M)
    - Drawing Incorporation Errors
    - Manufacturing Aid
    - Drawing Errors
    - Fastener Type/Grip
    - Tolerance Change
    - Productivity
    - Minor changes taken care of by initial release of Class I Change
      (Same categories as above)

Minor Class II Changes

Propulsion/Mechanical

H35809-964 Allowed one seal part number to be substituted for another in the GO2 Vent Duct Assembly. Seals identical and interchangeable

Structures

H35809-802 Seal pass (first pass) added to O2 weld at 629.2+/-7.00 (292.5 ref)

TPS

J31193-001 Revision to Intertank foam application drawing to pick up part no. roll for stringer cap installation change

NCD Assessment Criteria

- Assessment of all MRB Items
  - Adequacy of technical dispositions
  - Completeness of required repair/retest
  - First time occurrences/SMR
  - Verification of margin of safety assessment/documented
  - Review of impact to hazards
  - Engineering review for impact to loads
  - Engineering review for reduced extrusion to plate weld allowables

ET-97 DR/PR/OMRSD Waiver/Exceptions

as of 10/20/98

System	Discrepancy	Problem	MRB Items	Exceptions/ Waivers
• Electrical	0	0	0	0
• Propulsion/ Pneumatics	1	1	0	0
• Structures	1	1	1	0
• Thermal (TPS)	1	7	4	0
Total	**3**	**9**	**5**	**0**

ET97pfrc.4250.ls 10/98

ET-97 PR/MRBs, Thermal

PR No./Status	Title/Description	Disposition
PET-97-TS-0002	Aft hard point close-out has areas of low foam during close-out	• Use as repaired • Disposition to trim and re-foam aft hard point and MRB repair • Additional bondlines have no affect on material performance
PET-97-TS-0005	Damaged foam on +Y PAL ramp trailing edge above cable tray	• Use as repaired with SS-1171 • Provides adequate thermal protection
PET-97-TS-0006	+Y aft fairing close-out 8 areas not per drawing	• Use as repaired with PDL • Structural temperatures unchanged • Margin of Safety unaffected
PET-97-TS-0007	-Y aft fairing close-out 4 areas not per drawing	• Use as repaired with PDL • Structural temperatures unchanged • Margin of Safety unaffected

ET97pfrc.4250.ls 10/98

ET-97 PR/MRBs, Structures

PR No./Status	Title/Description	Disposition
PET-97-ST-0004	• Scratch on +Y spindle with raised metal and measureable depth (0.015") • Defect is on spinlde edge with a minimum part thickness of 0.490"	Remove raised metal • Localized defect • No crack or crack like indications under magnification • Critical M.S. unaffected

ET97pfrc.4250.ls 10/98

ET-97 Field Engineering Changes

- FEC KET-0039
- SPAR #ET-0041-R04 (TPS ET-97-TS-001)
  - SPAR was approved to reduce foam thickness at the LO2 +Z quadrant to reduce potential of TPS cracking at Sta 536 adjacent to the O2/OAO12 intersection

ET-97 Limited Life Components

Cycle Sensitive

Description	Part No.	Serial No.	Limit	Required	Remaining
LH2 Manhole Cover Assy -Fwd	80914081488 -509	00538060	8	1	8
LO2 Tank Mechanical Assy	80912002000 -500	00611440	8	1	8
LH2 Tank Mechanical Assy	80914002000 -500	00576800	8	1	8
LO2 Manhole Cover Assy	80911001205 -509	00624760	8	1	8

ET-97 Limited Life Components

Cycle Sensitive

Description	Part No.	Serial No.	Limit	Required	Remaining
LO2 Fwd Ogive Cover Plate	80911001207 -509	00543630	8	1	8
LH2 Manhole Cover Assy -Aft	80911001444 -509	00613220	8	1	8
LH2 Tank Siphon Closure	80911001445 -502	00630700	8	1	8

ET-97 Limited Life Components

Age Sensitive

Description	Part No.	Serial No.	Limit	Initiation	Expiration
External Tank	80901000000 -500	00000090	6 Yrs	3/98	3/2004

ET-97 Limited Life Components

Age Sensitive Pyrotechnics - 10 Years Life/Requires Lot Verification Tests After 4 and 7 Years

Description	Part No.	Lot No.	Serial No.	Latest Retest	Expiration
Separator Assy GUCP	PD500020-059	AAH	0001135	04/13/1998	10/2003
Cartridge Assy	PD500020-030	AAH	0001205	04/13/1998	10/2003
Cartridge Assy	PD500020-030	AAH	0001247	04/13/1998	10/2003

ET-97 Alternate Blowing Agent Usage at KSC

Foam	Document	Description	Location	Size
SS-1171	T5141	Aft Hardpoint Closeout	xt 1973-2076, 180 degrees	4410 sq. in.
SS-1171	TS-0005	Foam repair on +Y ET/SRB PAL ramp	Xt 2050, ET/SRB PAL ramp aft edge	22.5 sq. in.

ET97pfrc.4250.ls 10/98

Level II Waivers - Baseline

Document / Requirement	Authority	Paragraph	Waiver No.	Effectivity
NSTS 07700 Vol V – Information Management Requirements				
Generic part name, type, common designation, and part manufacturer H4 code are not required for EEE parts status print out	S00127B 6/28/88	Table C.5 Item 2SR-10	6	ETs 49 & up
Data required in limited life status report is supplied in acceptance data package	S00127B 6/28/88	Table C.6 Item 2SR-7	8	ETs 49 & up
Requirement to deliver element pressure vessel historical data to EPO will remain at contractor facility	S00127B 6/28/88	Table C.6 Item 2SR-7	10	ETs 49 & up

Level II Waivers - Baseline

Document / Requirement	Authority	Paragraph	Waiver No.	Effectivity
NSTS 07700 Vol X – Space Shuttle Flight and Ground System Specification, Book 1 Requirements				
Electrical wiring of redundant systems NSTS 08080-1, 20A/4B	S040732G 6/18/88	Table 2.0	362	ETs 23, 27-29, 31 & up
Electrical bonding per MIL-B-5087B (2)	S040732M 9/9/88	3.6.14	378	ETs 23, 27-29, 31 & up
Soldering, circuit boards, and connectors	S040732M 9/9/88	3.6.15.1.1	379	ETs 23, 27-29, 31 & up
PD7400106 circuit boards	S040732M 9/9/88	3.6.15.2.1	382	ETs 23, 27-29, 31 & up
PCM MUX and pressure transducer circuit boards	S040732M 9/9/88	3.6.15.2.1	383	ETs 23, 27-29, 31 & up
Soldering of electrical connectors	S094779C 2/21/91	3.6.15.1.1	573	ETs 37, 41 & up

Level II Waivers - Baseline

Document / Requirement	Authority	Paragraph	Waiver No.	Effectivity
NSTS 07700 Vol X – Space Shuttle Flight and Ground System Specification, Book 1 Requirements				
Debris prevention	S082962A 10/2/98	3.2.1.2.14		ETs 92, 97-105
NSTS 07700-10-MVP-01– Shuttle Master Verification Plan				
Environmental acceptance of ET components	S002130H 3/7/89	3.7.1	13	ETs 23, 27-29, 31 & up
NSTS 07700-10-MVP-01– Shuttle Master Verification Plan				
LH2 feedline bellows	S005203G-R1 8/2/91	1.2	3	ETs 42-45, 47 & up

ET97pfrd.4250.ls.10/98

Level II Waivers - Baseline

Document / Requirement	Authority	Paragraph	Waiver No.	Effectivity
SL-E-0001 – Specification Electromagnetic Compatibility Requirement				
Wire marking is not applicable to the ET	S40732K 9/27/89	3.2.5	3	ETs 23, 27-29, 31 & up
SW-E-0002 – Ground Support Equipment General Design Requirements				
Factor of safety applied to yield for GUCP leg	S87020L 8/17/88	3.4.2.1	21	ETs 23, 27-29, 31 & up

ET97pfrd.4250.ls.10/98

Level III Deviations

Document / Requirement	Paragraph	Waiver No.	Effectivity
CPTO1M09A, External Tank Contract End Item Specification			
• Photographic evidence shows a loss of foam from both +Y and –Y Intertank Thrust Panels • Analysis concluded a low probability of debris impact on Orbiter critical area	3.2.5	233	ETs 92, 97-99, 101-105

ET97pfrd.4250.ls.10/98