FLIGHT READINESS STATEMENT
STS-70/ET-71 AND STS-69/ET-72
Δ EXTERNAL TANK PROJECT REVIEW

EXTERNAL TANKS ET-71 AND ET-72, AS IDENTIFIED IN THE EXTERNAL TANK PROJECT DELTA FLIGHT READINESS REVIEW DATED JULY 7, 1995, ARE CONSIDERED READY TO SUPPORT FLIGHT UPON ACCEPTABLE DISPOSITION OF OPEN WORK AND/OR OPEN ACTIONS.

for Marion L. Teaf
J. RANDALL/EB01

Cynthia Snoddy
for M. PESSIN/EE31

for J. M. Tenh
P. SCHUERER/EH01

M. D. Smiles
FOR J. EHL/CR01

for John Aberg
J. STRICKLAND/EL01

Lee D. Foster
for J. BLAIR/ED01

Michael B. Moore
for J. MCCARTY/EP01

M. D. Smiles
M. SMILES/CR70

Parker V. Counts
P. V. COUNTS/SA31, CHAIRMAN

STS-69/ET-72 Flight Readiness Review

Frank File

STS-69
SSP FRR

FOR INFORMATION ONLY

Overview

- **Mission highlights**
- **Changes** — **None to be presented**
- **Processing Anomalies**
  - Anomalous GH2 vent/relief valve position indication
- **Certification Status** — **No issues**
- **Open work/paper** — **No constraints**
- **Certification of Flight Readiness** — **No constraints**
- **Readiness Statement**

Anomalous GH2 V/R Valve Position Indication

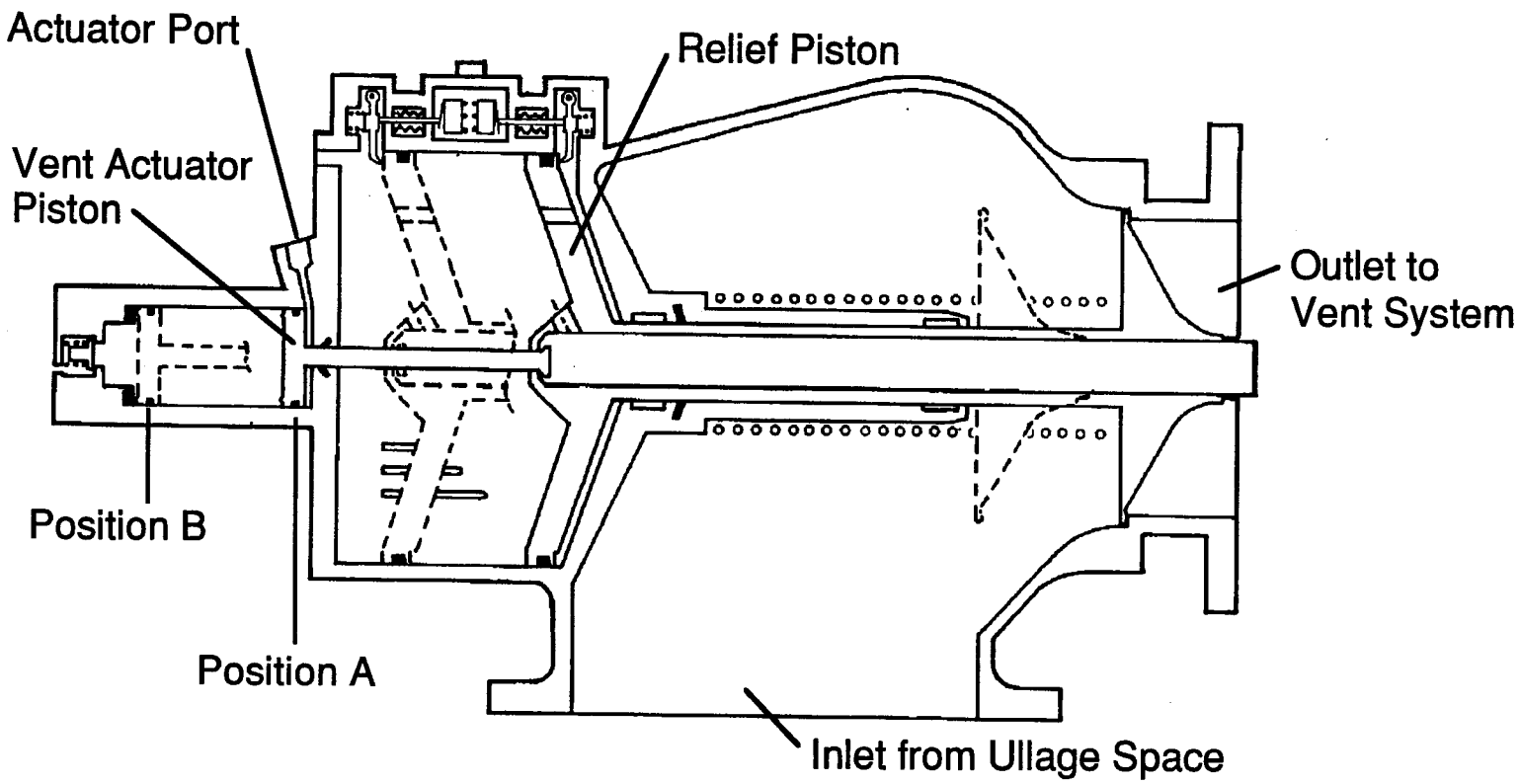

Vent/Relief Valve Action

Anomalous GH2 V/R Valve Position Indication

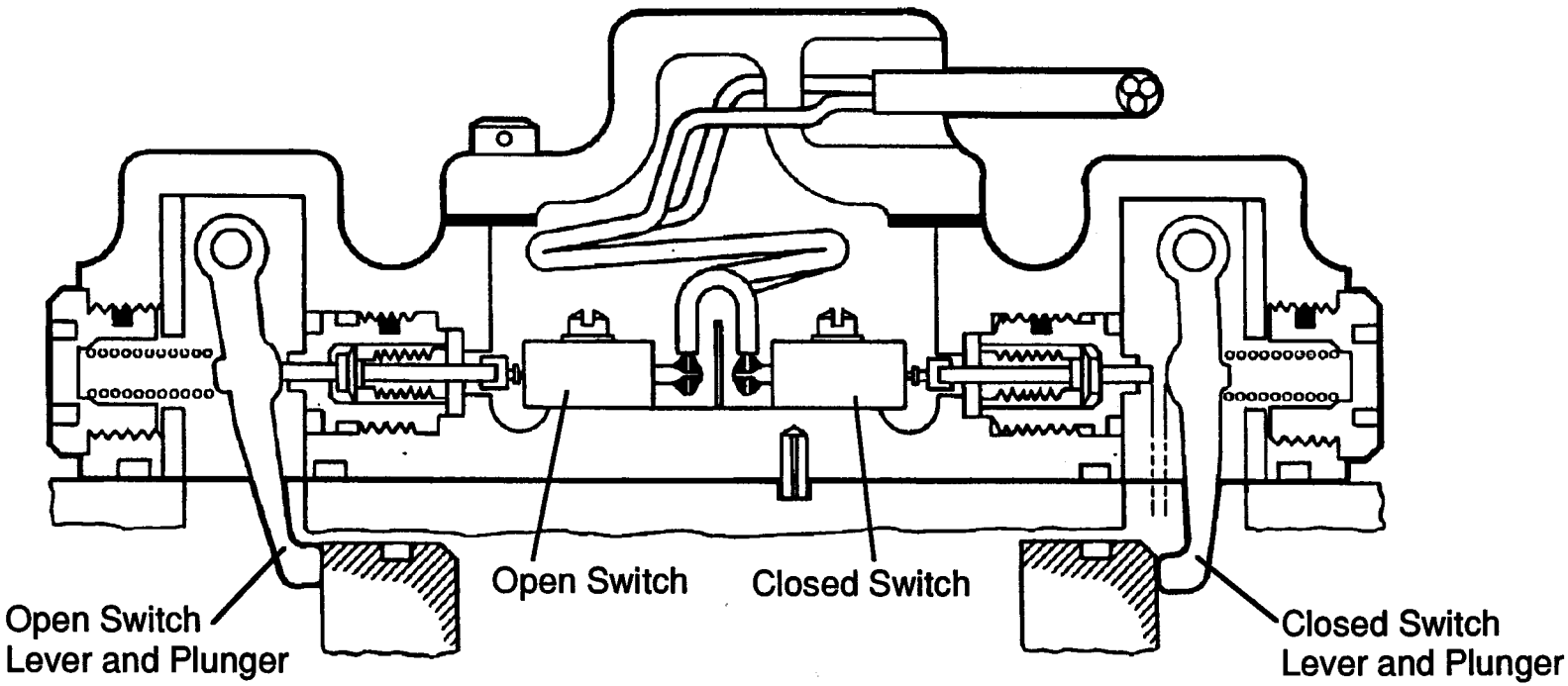

Vent/Relief Valve Switch Assembly

Anomalous GH2 V/R Valve Position Indication

Background (continued):

- ET-72 (S/N 202)
  - During H2 blank-off plate installation IPR-69V-066 was generated as a result of anomalous position indication
  - IPR investigation revealed that closed position indicator failed to show "on" on 2 occasions
  - Investigation also showed one cycle with simultaneous indications of open and closed
  - Several instances of intermittent "off/on" indications occurred with valve in closed position
- No anomalies noted for S/N 202 during vendor ATP, MAF test/checkout and KSC valve timing checks and pad validation
  - No leakage during 9 months storage period at MAF
- Vent/relief valve failure history
  - ET-43 position indicator switch exhibited simultaneous open/closed electrical indications during checkout at MAF
  - Failure investigation concluded that damage to the switch case of the open position micro switch was responsible for failure

Anomalous GH2 V/R Valve Position Indication

H2 Valve Cycling Closed Indication Anomaly

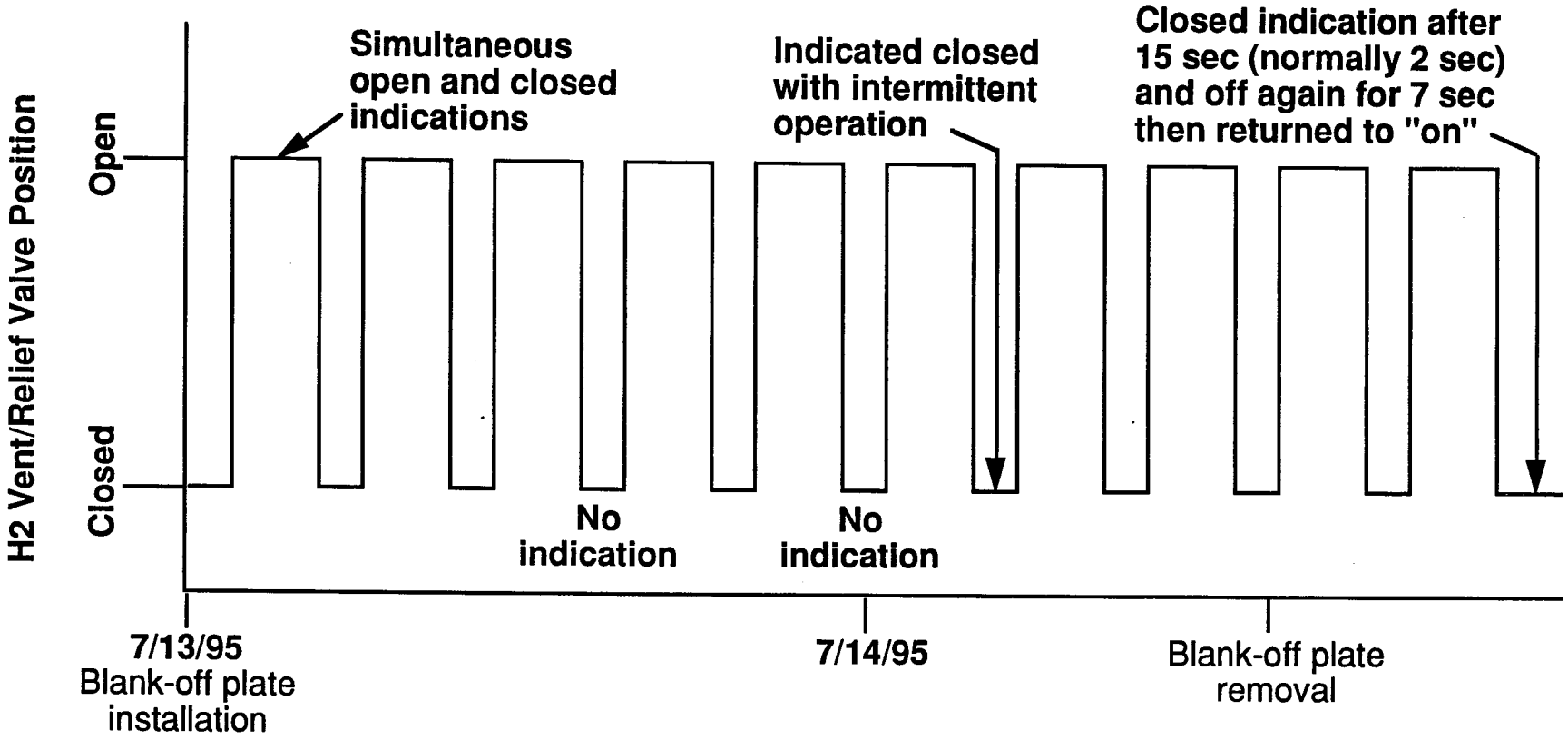

Anomalous GH2 V/R Valve Position Indication

Discussion:

- Anomaly isolated to vent/relief valve closed position indicator assembly/circuit
  - Simultaneous indications of open and closed
  - With valve closed closed indicator exhibited intermittent "off/on" conditions
  - With valve closed all other instrumentation functioned normally
- Vent/relief valve closed indicator
  - OMRSD requirements:
    - Vent valve open/closed timing checks completed - Nominal
    - Verify closed indicator "on" at initiation of pre-press (S00FM0.400)
    - Verify closed indicator "on" for contingency restart of cavitating recirc pumps (S00E00.576)
  - Not critical (Crit 3)
  - Not monitored nor used in any LCC
  - Not used for propellant loading control
  - Not used in GLS

Conclusions:

- LCC (ET-04, Pre-pressurization cycle anomaly) provides protection from excessive H2 leakage in flight (ref Hazard Report S.10)
- ET-72 acceptable for flight with existing vent valve (S/N 202)
  - Exception to OMRSD (S00FM0.400 and S00E00.576) in process

Status:

- Additional checks in progress to isolate anomaly

Readiness Statement

The External Tank, ET-72, is hereby certified and ready for STS-69 flight pending completion/closure of open and planned work

Dennis R. Deel
Vice President, External Tank Project
Lockheed Martin Manned Space Systems

Parker V. Counts
Manager, External Tank Project
Marshall Space Flight Center

External Tank Back-Ups

Anomalous GH2 V/R Valve Position Indication

BU ET-2

Pre-press ullage pressure - No leakage vs Worst Case Acceptable Using LCC ET04

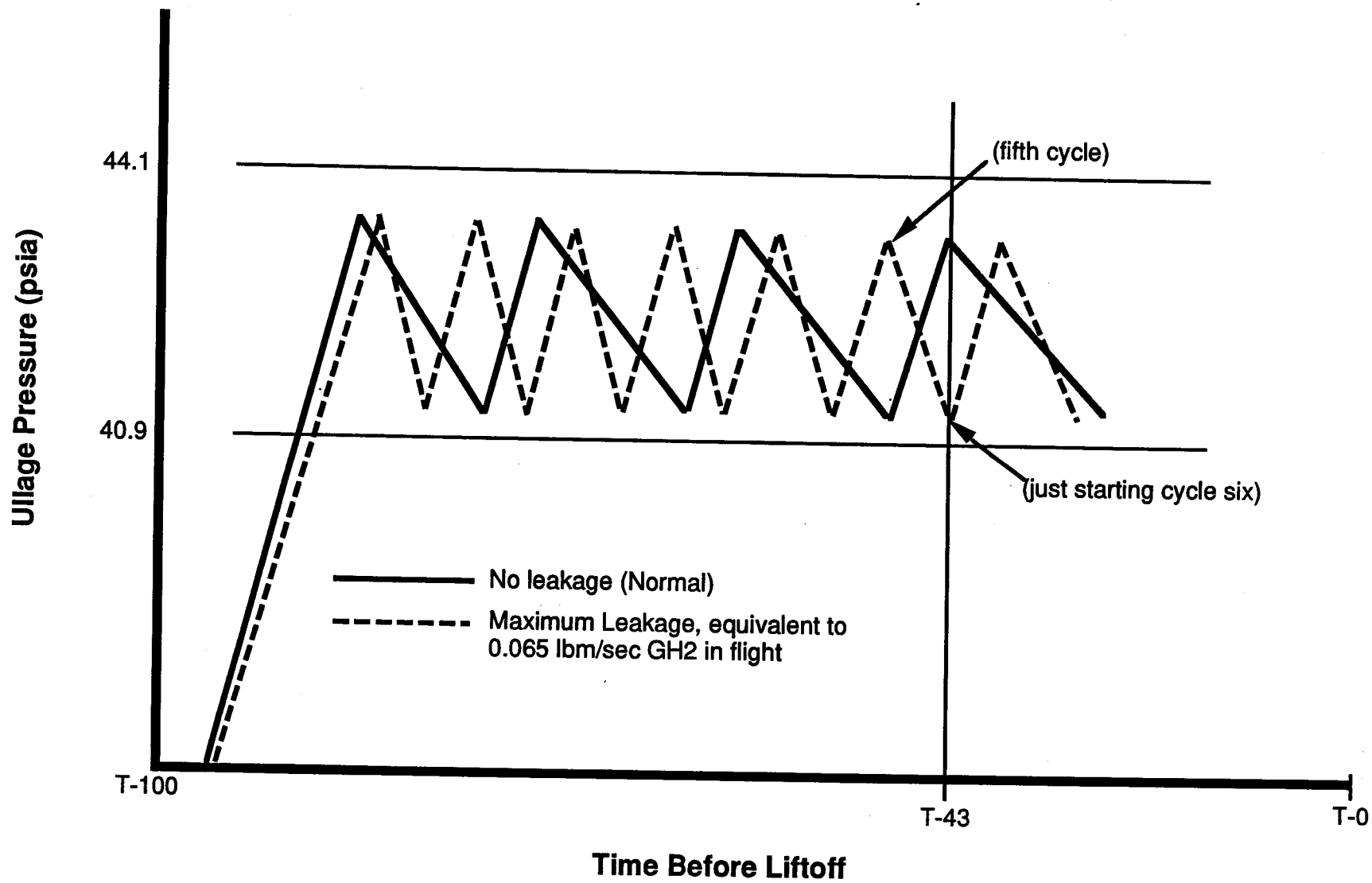

Manned Space Systems

ET72FRR.4220.dd.7/95

STS-70/ET-71 and STS-69/ET-72
Delta ET Project Flight Readiness Review
July 7, 1995
Action Item

Action Item No. : 1 **Chart No.:** 4

Actionee: Gene Horak **Due Date:**

Description: Provide investigaton results/corrective action for topcoat adhesion on GO2 vent seal after retraction.

Initiator: Parker Counts

Closure: Investigation results revealed that topcoat adhesion to the GO2 vent seal tends to occur in thicker topcoat applications. Off line tests demonstrated adhesion and peeling away of topcoat in thickness greater than 2 mils. Corrective action will be implemented as follows:

1) ET 75-81 will be reworked at KSC via Problem Reports (PRs)
2) ET-82 will be reworked at MAF via NCD
3) ET-83 and subs will implement a design change to control the thickness of the topcoat application in the GO2 seal by use of a workmanship standard that results in a topcoat thickness of 2 mils or less

See Special investigation IS-95-T-004 for additional details.

Submitted by:		**Approved by:**	
J. Feeley (signature on file) Actionee	12/11/95 Date	D. Deel (signature on file) Vice President ET Project	12/12/95 Date
S. Copsey (signature on file) Manager	12/11/95 Date	G. Z. Summer Chairperson/Initiator	12/13/95 Date

STS-70/ET-71 and STS-69/ET-72
Delta ET Project Flight Readiness Review
July 7, 1995
Action Item

Action Item No. : 3 **Chart No.:** 8 - 14

Actionee: Frank Ramsey **Due Date:** 7/10/95

Description: Clarify/update charts on CAPS P-078 to reflect current information and include discussion of critical flaw size

Initiator: Parker Counts

Closure: See attached revised charts

Submitted by:

Actionee — Date: 7-11-95

Manager — Date: 7/11/95

Approved by:

Vice President ET Project — Date: 8/7/95

Chairperson/Initiator — Date: 8/7/95

GO2 Forward Pressure Line Leak (CAPS P-078)

Revised 7/10/95

19a

Issue:

- GO2 forward pressure lines failed ATP for leakage
  - Line S/N 0001278 leak detected at weld #4
  - Line S/N 0001682 leak detected at weld #6

Background:

- Acceptance requirements:
  - All lines are subjected to x-ray and dye penetrant inspection prior to ATP
  - During Acceptance Test Procedure (ATP) all lines are tested as follows:
    - Hydrostatic proof test (1500 psig)
    - Non pressurized deflection test
    - Hydrostatic pressurized deflection test (600 psig)
    - GN2 bubble leak test (300 psig)
- Line configuration/material/weld fabrication
  - Inconel 718 tubing to ARMCO 21-6-9 CRES BSTRA
  - Fusion weld fabricated manually
    - Butt weld joint utilizing hastalloy "W" filler
    - Welded per Spec MPQ-103 (supplier document)

GO2 Forward Pressure Line Leak (CAPS P-078)

Revised 7/10/95

19b

Discussion:

- Line S/N 0001278 at weld #4
  - Leaked during hydrostatic pressurization for the 600 psig deflection test
  - Leak subsequently verified by the GN2 leak test (noticeable at 25 psig)
  - Prior to deflection test, a drop of water was seen by operator following the 1500 psig proof test (source unknown)
  - Leak caused by a 0.030" long x 0.003" wide crack
    - Critical flaw size for weld #4 is 1.76"
    - Crack not detectable by X-ray and smaller than Probability of Detection (POD) for penetrant inspection
- Line S/N 0001682 at weld #6
  - Leaked during the 1500 psig proof test
  - Leak confirmed by a second 1500 psig proof test
  - Leak caused by a 0.025" long crack (unable to determine width)
    - Critical flaw size for weld #6 is 1.76"
    - Crack smaller than Probability of Detection (POD) for penetrant inspection

Cause: Pending investigation results

Corrective Action: Pending investigation results

Rationale for Flight:

- ET-71 and up - All units successfully passed ATP
- ATP is designed to catch this type of failure

GO2 Pressure Line Leak (CAPS P-078)

Revised 7/10/95

19c

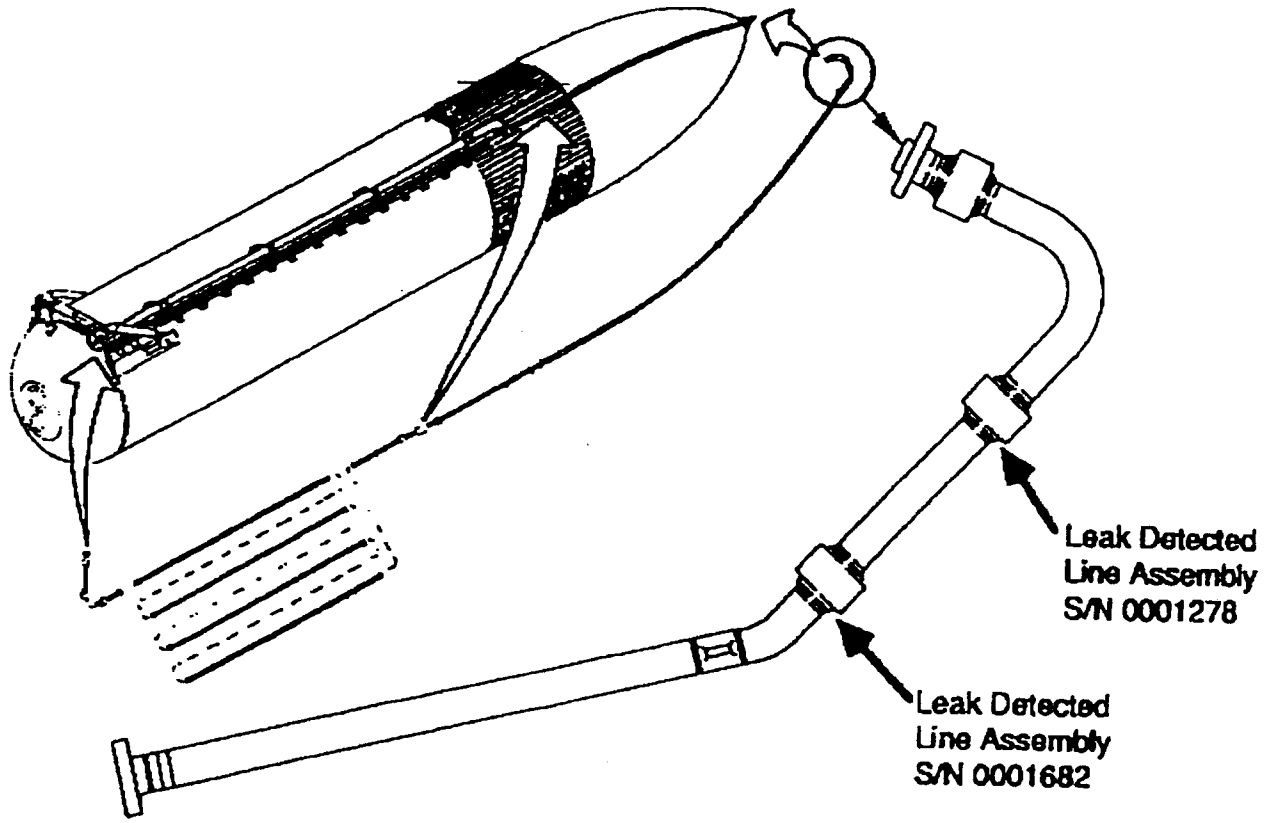

Delta ET Project

STS-70/ET-71
STS-69/ET-72
Flight Readiness Review

LOCKHEED MARTIN

Manned Space Systems

ET71/ET72ΔP.7/95.S1.1

Agenda

- ***Overview*** — ***Ben Ferrell***
- ***Prior Mission Performance Summary***
- ***Mission/External Tank Highlights***
- Changes: No new items
- Senior Management Review NCDs: None
- Special Topic: ET-71 TPS damage/repair
- SRM&QA Assessment — Frank Ramsey
- KSC Processing — Greg Hart
- Verification/Certification — Ben Ferrell
- Mission Unique Assessment
- Readiness Statement
- Appendices
  - A: Minor Changes
  - B: SRM&QA Assessment
  - C: KSC Processing
  - D: Previously reviewed material
  - E: Special Topic: ET-71 TPS damage/repair

Overview

- Review covers changes/differences/non-conformances not previously flown and/or reviewed

- This Delta review for STS-70/ET-71 and STS-69/ET-72 includes:
  - Prior mission performance summary
  - Items not previously addressed at the Block 12 ET Project FRR
  - Items specific to mission STS-70 and STS-69
  - Details of previously addressed items are available in appendix D

FRR Series	**STS-70/ET-71**	**STS-69/ET-72**
- Block 12 ET Project (ETs 71-75)	5/3/95	5/3/95
- Mission Specific Reviews		
• ET/SRB Mate	4/10/95	5/25/95
• Delta ET Project (Baseline)	7/7/95	7/7/95
• Associate Administrator FRR	5/26/95	7/18/95
• Mission Management Team (L-2 Day)	7/11/95	7/28/95

Mission STS-71/ET-70 Performance Summary

System	Performance	
	Scrub 6/24/95 (due to weather)	Launch 6/27/95
OMRSD/LCC	Violated LCC weather rules for precipitation	No violations
Instrumentation	Nominal	Nominal
MPS	Nominal - Blown power fuse in MLP delayed LO2 drain	No violations
Hazardous Gas	No violations	No violations
TPS	Topcoat adhered to GO2 vent seal at retraction	Nominal
ET Disposal	Not applicable	Nominal
Orbiter Tile Damage	Not applicable	Not available
Post Separation Photos	Not applicable	Not available

Mission/External Tank Highlights

Mission	STS-70	STS-69
• **Launch**	7/13/95	7/30/95
- Window	09:41 - 13:41 EDT	10:40 - 15:08 EDT
- Pad	B	A
- Orbiter	Discovery (OV-103)	Endeavour (OV-105)
- Orbital inclination	28.45° - Insertion at 160NM	28.45° - Insertion at 200NM
- ET photo coverage	• Crew photos from cockpit window	• Umbilical well cameras • Crew photos from cockpit window
• **Primary payload**	TDRS-G (Tracking and Data Relay Satellite	WSF-2 (Wake Shield Facility)
• **Landing**	7/21/95	8/10/95
- Time	7:48 EDT	7:11 EDT
- Location	KSC	KSC

External Tank	ET-71	ET-72
• DD250 Acceptance	5/4/94	7/1/94
• Shipped to launch site	12/9/94	3/9/95

Agenda

- Overview — ***Ben Ferrell***
- Prior Mission Performance Summary
- Mission/External Tank Highlights
- ***Changes: No new items***
- ***Senior Management Review NCDs: None***
- Special Topic: ET-71 TPS damage/repair
- SRM&QA Assessment — Frank Ramsey
- KSC Processing — Greg Hart
- Verification/Certification — Ben Ferrell
- Mission Unique Assessment
- Readiness Statement
- Appendices
  - A: Minor Changes
  - B: SRM&QA Assessment
  - C: KSC Processing
  - D: Previously reviewed material
  - E: Special Topic: ET-71 TPS damage/repair

Changes - List

Description

- **Previously presented at Block 12 FRR, 5/3/95** (included in Appendix D)
  - **ET-71**
    - Delete aft LO2 feedline bracket heaters (B01937)
    - Generic certification for ET thermal environments (B01959)
  - **ET-72**: None
- **New items since Block 12 FRR:** None

Special Topic: ET-71 TPS Damage/Repair

Issue:

- Inspection of ET-71 TPS surface revealed numerous (216) areas of damaged foam caused by woodpecker while at Pad B

Background:

- Detail mapping of damaged areas revealed 216 damage locations
- All areas to be repaired or dispositioned as acceptable for flight
- STS-70 returned to VAB to accomplish repairs
  - 175 areas repaired:

• Nose cone	8
• LH2 barrel	19
• Aft hard point	1
• LO2 ogive cable tray	14
• LO2 ogive and barrel	58
• LO2 feedline	1
• Intertank	63
• Aft dome	11

  - 41 peck holes < 0.125" in diameter not repaired
- Concern related to ice formation, structural integrity and ET disposal footprint

Status:

- All areas repaired or dispositioned as acceptable for flight

Special Topic: ET-71 TPS Damage/Repair

Basis for Certification

Standard Repair
- **No primer touch-up**
- **No red dye**

PDL
- Validated repair process and material
- PDL repairs have been flown numerous times
- Primer utilized for corrosion prevention and foam adhesion
  - No corrosion concern based on ET-71 launch date
  - Inspection revealed sufficient primer remained in all repair areas to provide adequate bond strength for foam adhesion
- Red dye not utilized due to known cause of defects
  - Red dye used to determine extent of damage when cause is unknown

Type I SLA
- Approved - Test validated material/process
- Used for non-cryogenic surfaces

Type II SLA
- Approved - Test validated material/process
- Used for cryogenic surfaces

Special Topic: ET-71 TPS Damage/Repair

Basis for Certification

- **Repair with no adhesive**
  - Repair areas were single peck holes <0.5 " and >0.125" diameter
  - Repaired with PDL - No adhesive (Conathane) allowed per STP 1518
  - Bond adhesion to substrate and TPS sidewall sufficient to retain repair in place
  - Repair process validated by test
- **No repair required**
  - Areas/holes ≤0.125"diameter
    - Thermal analysis shows no increase in structural design temperatures
    - Cryogenic tests performed showed that frost formed in holes < 0.125 " diameter to substrate
    - Frost is acceptable in the ice/frost area and is not a debris concern

Special Topic: ET-71 TPS Damage/Repair

MRBs - LO2 Nose Cone and Cable Tray Fairing Area

Discrepancy	Disposition/Rationale
• 3 peck hole locations	• Use as repaired (blended) - Apply topcoat
• 2 areas violate minimum drawing thickness - Should be: 0.60" min. - Actual: 0.57" min.	• Use as repaired - Apply topcoat - Total area of defects is small in size - No impact - No increase in structural design temperatures

• 6 handpack Type I repairs used shelf-life expired DC1200 primer	• Use as repaired
	- DC1200 used to treat metallic substrate
	- Milky or cloudy will indicate hydrolyzed material
	  • OMI visually verified clear DC1200 material application (verifies no hydrolysis occurred)
	  • Tensile test results acceptable (cohesive failure) not a substrate failure
	- Tests performed on DC1200 material passed normal shelf life extension requirements

MRBs - LH2 Aft Dome Area

Discrepancy

- 6 areas on LH2 aft dome aft of Station 2070 were repaired with PDL using single bag method or enhanced bag and straw method
  - KSC In process rework requires use of an ethafoam tool in support of these overhead repair areas

Disposition/Rationale

- Use as repaired
- Validated PDL process
- 1 area repaired with PDL utilized the bag method
  - Does not violate criteria utilized at MAF for overhead bag repairs
  - KSC criteria slightly more stringent
- 5 areas repaired with PDL over SLA utilizing an enhanced bag & straw method
  - Straw allows venting of any entrapped air
  - KSC/MAF technicians demonstrated process/technique with acceptable results

Special Topic: ET-71 TPS Damage/Repair

MRBs - LH2 Aft Dome Area

Discrepancy

- 10 areas on LH2 aft dome aft of Station 2070 were repaired with PDL using single bag method
  - KSC In process rework requires use of an ethafoam tool in support of these overhead repair areas

Disposition/Rationale

- Use as repaired
- Validated PDL process
- 5 areas not truly overhead
  - Actual repair areas fall within 45° horizontal tank rework requirement
  - KSC requirement a guideline to allow case by case assessment
- 5 areas repaired with PDL over SLA utilizing an enhanced bag & straw method
  - Straw allows venting of any entrapped air
  - KSC/MAF technicians demonstrated process/technique with acceptable results

Special Topic: ET-71 TPS Damage/Repair

MRBs - LH2 Aft Dome Area

Discrepancy

- Contamination from mixing process and/or application process/materials prevented SLA cure on 5 repairs
- Contaminated material removed, additional cleaning with MEK solvent and trimming performed
- SLA reapplied

Disposition/Rationale

- Use as repaired
- MEK cleaning eliminated silicone contaminants
- RTV compatibility test replaced the need for a water break free verification
  - Verified no silicone contaminants present
  - Eliminated potential of spreading contamination during water break free process
- SLA applied fully cured - met all requirements
- Contractural FS requirement maintained

Agenda

• Overview	Ben Ferrell
• Prior Mission Performance Summary	
• Mission/External Tank Highlights	
• Changes: No new items	
• Senior Management Review NCDs: None	
• Special Topic: ET-71 TPS Damage/Repair	
• ***SRM&QA Assessment***	***Frank Ramsey***
• KSC Processing	Greg Hart
• Verification/Certification	Ben Ferrell
• Mission Unique Assessment	
• Readiness Statement	
• Appendices	
- A: Minor Changes	
- B: SRM&QA Assessment	
- C: KSC Processing	
- D: Previously reviewed material	
- E: Special Topic: ET-71 TPS damage/repair	

SRM&QA Assessment

as of 6/29/95

Item	Status	
	STS-70/ET-71	STS-69/ET-72
• **Alerts**	None	None
• **MRB Assessment**	Complete - No issues/no impact to hazard controls	
• **Hazard Assessment**	Complete - All hazard reports were re-assessed and hazard controls verified	
• **Corrective Action Problem Summary (CAPS)**		
- ET-80 LH2 siphon cover joint leak test failure (P-077)	Pending closure at MSFC	
- GO2 forward pressure line leak test failure at vendor (P-078)	To be discussed in separate handout	

LH2 Siphon Cover Joint Leak (CAPS P-077)

Issue:

- ET-80 LH2 siphon cover joint leak test failed ATP

Background:

- During the dual seal cavity leak check in Final Assembly, a 472 sccm leak was detected (requirement = sccm maximum)
- Flange uses a Teflon coated Inconel Naflex seal
- No test equipment malfunction found during investigation
- Upon joint disassembly inspection of seal found the following:
  - Area on the primary seal lip, where no evidence of seal to flange contact was present (no witness mark)
  - Dished area with no disruption or damage to the Teflon coating
- Seal returned to supplier for failure investigation

Cause:

- Isolated incident
- During machining operations an Inconel chip became lodged between the seal and the lathe chuck, causing a localized deformation on the primary seal
  - Upon release, the seal height became undersize

LH2 Siphon Cover Joint Leak (CAPS P-077)

Corrective Action:

- Machining technique was changed in December 1993 to restrain the seal in the lathe by an improved method and revise the machining sequence
- Effective June 1995, an additional inspection step was added to verify the seal flatness prior to removing the seal from the machining lathe

Fleet Clearance:

- ET-80 joint reworked and successfully retested
- All others - No issue
  - Problems of this nature are screened during leak test

GO2 Pressure Line Lea (CAPS P-078)

Issue:

- GO2 forward pressure line leak detected during ATP

Background:

- Pressure line assembly tests:
  - 1500 psig hydrostatic proof test
  - Deflection tests
    - Two motions unpressurized
    - Two motions with line hydrostatically pressurized to 600 psig
  - Line is dried and leak tested using GN2
  - Initial proof test resulted in a drop of H2O viewed on weld #4
  - Leak was confirmed during pressurization for deflection testing

Cause:

- Pending investigation results

Corrective Action:

- Pending cause determination

Fleet Clearance:

- ET-71 and up - All units successfully passed ATP
- ATP is designed to catch this type of failure

GO2 Pressure Line Leal (CAPS P-078)

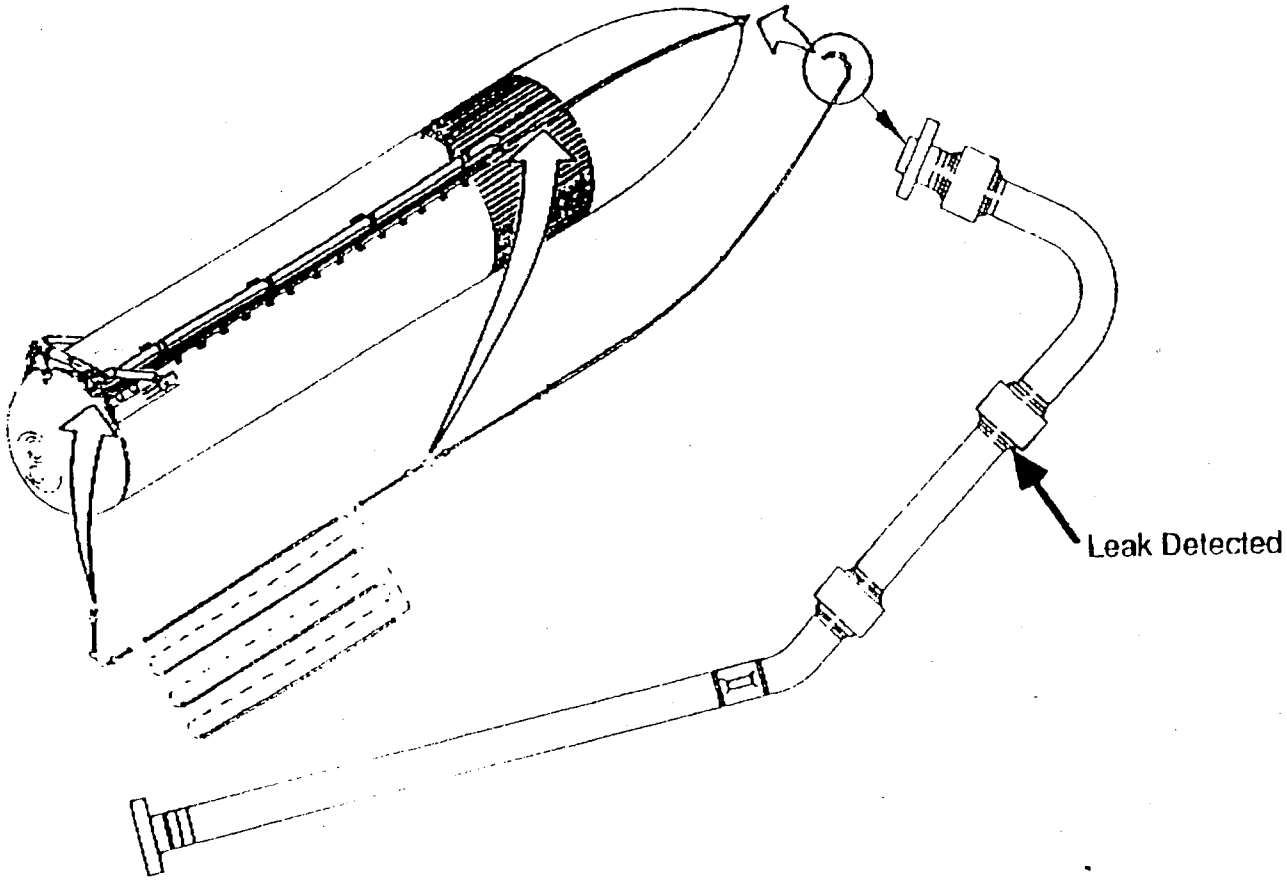

LOCKHEED MARTIN

Manned Space Systems

ET71/ET72ΔP.7/95.S7.2

LH2 Siphon Cover Joint Leak (CAPS P-077)

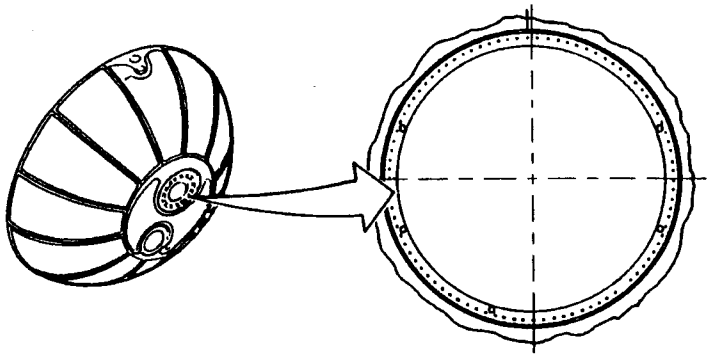

LH2 siphon manhole cover

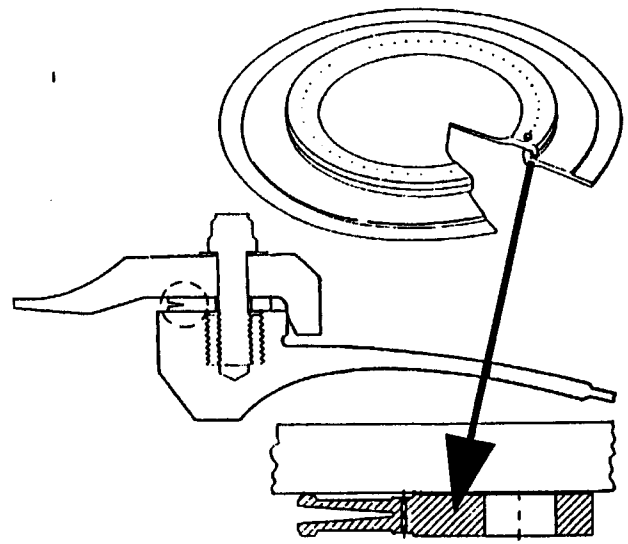

Naflex seal

Agenda

• Overview	Ben Ferrell
• Prior Mission Performance Summary	
• Mission/External Tank Highlights	
• Changes: No new items	
• Senior Management Review NCDs: None	
• Special Topic: ET-71 TPS Damage/Repair	
• SRM&QA Assessment	Frank Ramsey
• ***KSC Processing***	***Greg Hart***
• Verification/Certification	Ben Ferrell
• Mission Unique Assessment	
• Readiness Statement	
• Appendices	
- A: Minor Changes	
- B: SRM&QA Assessment	
- C: KSC Processing	
- D: Previously reviewed material	
- E: Special Topic: ET-71 TPS damage/repair	

KSC Processing - Status

as of 6/29/95

- **Discrepancy Reports (DRs)/Problem Reports (PRs) Review**
  - All PR/MRB * discrepancies/dispositions similar to previously flown vehicles and are within existing database
  - All MRBs have been reviewed by MAF Reliability for potential SMR

- **Limited Life Status ***
  All within required life through scheduled launch date plus 89 days

	STS-70/ET-71	STS-69/ET-72
• **OMRSD Exceptions/Waivers**	0	0
• **Changes**		
- ET modifications		
• Mod kit *	1	2
• DC&R (Discrepancy Check and Report) *	1	1
• Bldg 45	0	1
• FEC (Field Engineering Change)	0	0
- Software	0	0
• SIM load	5/23/95	TBD
• SIM launch	5/3/95	TBD

* Included in Appendix C

Agenda

• Overview	Ben Ferrell
• Prior Mission Performance Summary	
• Mission/External Tank Highlights	
• Changes: No new items	
• Senior Management Review NCDs: None	
• Special Topic: ET-71 TPS Damage/Repair	
• SRM&QA Assessment	Frank Ramsey
• KSC Processing	Greg Hart
• ***Verification/Certification***	***Ben Ferrell***
• ***Mission Unique Assessment***	
• Readiness Statement	
• Appendices	
- A: Minor Changes	
- B: SRM&QA Assessment	
- C: KSC Processing	
- D: Previously reviewed material	
- E: Special Topic: ET-71 TPS damage/repair	

Verification/Certification

as of 6/29/95

Item	Status
• **NSTS 07700, Volume X Baseline** - Revision L, Change 211	**No constraints**
• **Certification documentation** - Hardware Certification Sheets (HCS) - Certificates of Qualification (COQ)	**Complete - No issues**
• **Waivers/Deviations**	**Complete - No issues**

Mission Unique Assessment

as of 6/29/95

Category/Item	STS-70/ET-71	STS-69/ET-72
• **Vehicle loads**	No longer applicable * • First implementation of DOLILU II, Low Q	
• **Thermal assessment** - Ascent - Intact abort and reentry	No longer applicable * • First implementation of generic thermal environments	
• **Review of MRB actions using updated loads**	Complete - No issues	Complete - No issues
• **MPS Preflight Prediction Package**	ECD 7/3/95	ECD 7/20/95

* Previously presented at Block 12 FRR (5/3/95)

Agenda

- Overview — Ben Ferrell
- Prior Mission Performance Summary
- Mission/External Tank Highlights
- Changes: No new items
- Senior Management Review NCDs: None
- Special Topic: ET-71 TPS Damage/Repair
- SRM&QA Assessment — Frank Ramsey
- KSC Processing — Greg Hart
- Verification/Certification — Ben Ferrell
- Mission Unique Assessment
- ***Readiness Statement***
- Appendices
  - A: Minor Changes
  - B: SRM&QA Assessment
  - C: KSC Processing
  - D: Previously reviewed material
  - E: Special Topic: ET-71 TPS damage/repair

ET-71 Readiness Statement

The External Tank, ET-71 is hereby certified and ready for STS-70 flight pending completion/closure of open and planned work

Dennis R. Deel
Vice President, External Tank Project

ET-72 Readiness Statement

The External Tank, ET-72 is hereby certified and ready for STS-69 flight pending completion/closure of open and planned work

Dennis R. Deel
Vice President, External Tank Project

Appendices

- **A: Minor Changes**
- **B: SRM&QA Assessment**
  - NCD Assessment Criteria
- **C: KSC Processing**
  - Processing/Planned Work Schedules
  - PR/MRB Summaries
  - OMRSD Exceptions/Waivers: None
  - Limited Life Components
  - Modification Summary/Status
  - Software Changes: None
- **D: Previously reviewed material**
  - Changes
  - DOLILU II Low Q Impact Assessment for LWT
  - Block I SSME Ullage Pressure Assessment for LWT
  - Waivers/Deviations
- **E: Special Topic: ET-71 TPS damage/repair**

Class II or JS/DCN Changes

- Class I/II JS/DCN changes that have been reviewed by MSFC Resident Office
- All Class II STP/STM/Standards changes have been reviewed by MSFC M&P Lab
- These changes are acceptable for flight and summarized in this appendix (presentation not required)
  - Presentation criteria - Selection for presentation based on changes affecting:
    - Processes
    - Configuration
    - Material
    - Alternate Hardware
  - Presentation rejection criteria - All changes that do not affect configuration, material or processes
    - Revise Point of Incorporation
    - Drawing Clarification
    - Non-Flight Hardware Installation/Removal
    - Datum Changes
    - Update Usage/List of Materials (L/M)
    - Drawing Incorporation Errors
    - Manufacturing Aid
    - Drawing Errors
    - Fastener Type/Grip
    - Tolerance Change
    - Productivity
    - Minor changes taken care of by initial release of Class I Change (Same categories as above)

Class I/II or JS/DCN Changes - List

Change No.	Description	Effectivity
Electrical		
H34809-757	Add gapping requirement to electrical umbilical fairing installation	ET-71 and up
H34809-854	Initial PDL data load - drawing clarification	ET-71 and up
Propulsion		
B01975-900	LH2 feedline drawing clarification	ET-71 and up
B01975-901	LH2 feedline drawing clarification	ET-71 and up
H34809-681	Relax LH2 feedline drawing tolerance	ET-71 and up
H34809-788	Replaced view CH with an identical view FH with extended effectivity	ET-71 and up
H34809-830	Add gapping requirement for 45L2-32C clamp	ET-71 and up
H34809-884	Pressure line installation gap check at ground jumper to clamp fastener	ET-71 and up
H50001-697	Revise Nose cone purge installation drawing to relax tolerance	ET-71 and up
H50001-713	Clarify CDF installation in LO2 cable tray and Intertank	ET-72 and subs

Class I/II or JS/DCN Changes - List

Change No.	Description	Effectivity
Structures		
H34809-170	Clarify metal finish and touch-up requirements on thrust strut end fitting	ET-71 and up
H34809-473	Relax tolerances for minimum weld land width dome cap to LH2 tank gore assembly	ET-71 and up
H34809-486	Relax tolerances for minimum weld land width dome cap to LH2 tank gore assembly	ET-71 and up
H34809-528	Clarified requirement for LH2 aft dome frame	ET-71 and up
H34809-586	Clarified primer touch-up requirements for thrust panels	ET-71 and up
H34809-726	Revise drawing to reflect correct torque sequence - LH2 tank splice	ET-71 and up
H34809-728	Clarify reference dimension on LO2 cover plate assembly drawing	ET-71 and up
H34809-729	Remove primer application on bonding straps of aft crossbeam	ET-71 and up
H34809-780	Remove tooling part number from flag note	ET-71 and up
H50001-552	Revised vibro acoustics mark to ink stamp	ET-71 and up
Systems		
H34809-637	Update CIL implementation drawing	ET-71 and up
H34809-640	Update CIL implementation drawing	ET-71 and up
H34809-646	Update CIL implementation drawing	ET-71 and up

Class I/II or JS/DCN Changes - List, TPS

Change No.	Description	
H34809-639	Delete plug pull at +Z on Intertank CPR foam	ET-71 and up
H34809-622	Incorporate changes to enhance production and flow time	ET-71 and up
H34809-669	Revise foam trim dimension for Station 1377 feedline support	ET-71 and up
H34809-672	SLA trim on LO2 cable tray fairing	ET-71 and up
H34809-675	Revised not to delete "No substrate finish required"	ET-71 and up
H34809-684	Revised serialized code to yes for the -019 and -020 assembly	ET-71 and up
H34809-706	Delete topcoat application to LO2 C/T fairing	ET-71 and up
H34809-778	Added dimension and closeout line to LH2 foam ramps	ET-71 and up
H34809-841	Exempt rind tests at GH2 pressure line bellows/foam closeout at Station 2038	ET-71 and up
H34809-857	Relocate hand pack SLA application	ET-71 and up
H34809-881	Add trim dimensions	ET-71 and up
H34809-893	Revise views for LO2/Intertank flange area	ET-71 and up
H50001-674	Enhance foam closeout operations of the two vertical strut fittings	ET-71 and up
H50001-685	LO2 feedline closeout production build and flow time enhancement changes	ET-71 and up
H50001-694	Relax primer touch-up and adhesive application requirements on thrust and diagonal strut fittings	ET-71 and up
H50001-702	SLA deletion on LH2 cable tray/pressure line support brackets	ET-71 and up
H34809-561	Revise plug pull locations on Intertank	ET-71 and up
H34809-715	Increase CPR trim dimension inboard side of LO2 feedline support bracket	ET-71 and up
H34809-723	Revise PDL closeout of vertical strut cable tray supports	ET-71 and up
H34809-735	Add note for SLA termination radii on diagonal strut	ET-71 and up
H34809-756	Revise note for cryo flex specimen test location	ET-72 and up
H34809-902	Exempt rind test on diagonal strut/inboard LO2 feedline support	ETs 72, 74 and up
H50001-671	Revise trim on LH2 manhole cover	ET-71 and up

Class I/II or JS/DCN Changes - List, Materials

Change No.	Document	Description
H35809-147	26L33	Clarify vendor drawing and standard drawing
H35809-035	STP6506	Update requirements and reformat
H35809-036	STP6522	Revise to remove 58L7 slice and shield termination seals
H35809-129	STP1004	Clarification of requirements for drawing
H35809-143	STP5501	Update/correct figures
H35809-144	STP5506	Update/correct figures
H35809-146	STP7523	Revise test requirements to be consistent with allowables
H35809-154	K499 & K308	Revise storage requirements to be consistent with storage facility and define approved vendors
H35809-161	26L23	Added new vendor to approved vendor list
H35809-168	STP6510	• Revise to clarify adhesive requirements • Update format • Replace freon TMC • Clarify to improve consistency
H35809-170	STP5006	• Allow exception to masking requirement • Standardize etch rate at MAF • Delete obsolete materials/references
H35809-171	STP3001	• Allow exception to masking requirement • Update requirements
H35809-179	STP5506	• Acceptance criteria was inadvertently omitted in Rev C • Clarification
H35809-184	K1A3	• Added new mold release agent - Old material will no longer be available

NCD Assessment Criteria

- Assessment of all MRB NCD Items
  - Adequacy of technical dispositions
  - Completeness of required repair/retest
  - First time occurrences/SMR
  - Verification of margin of safety assessment/documented
  - Review of impact to hazards
  - Engineering review for impact to loads

ET-71 Processing Schedule

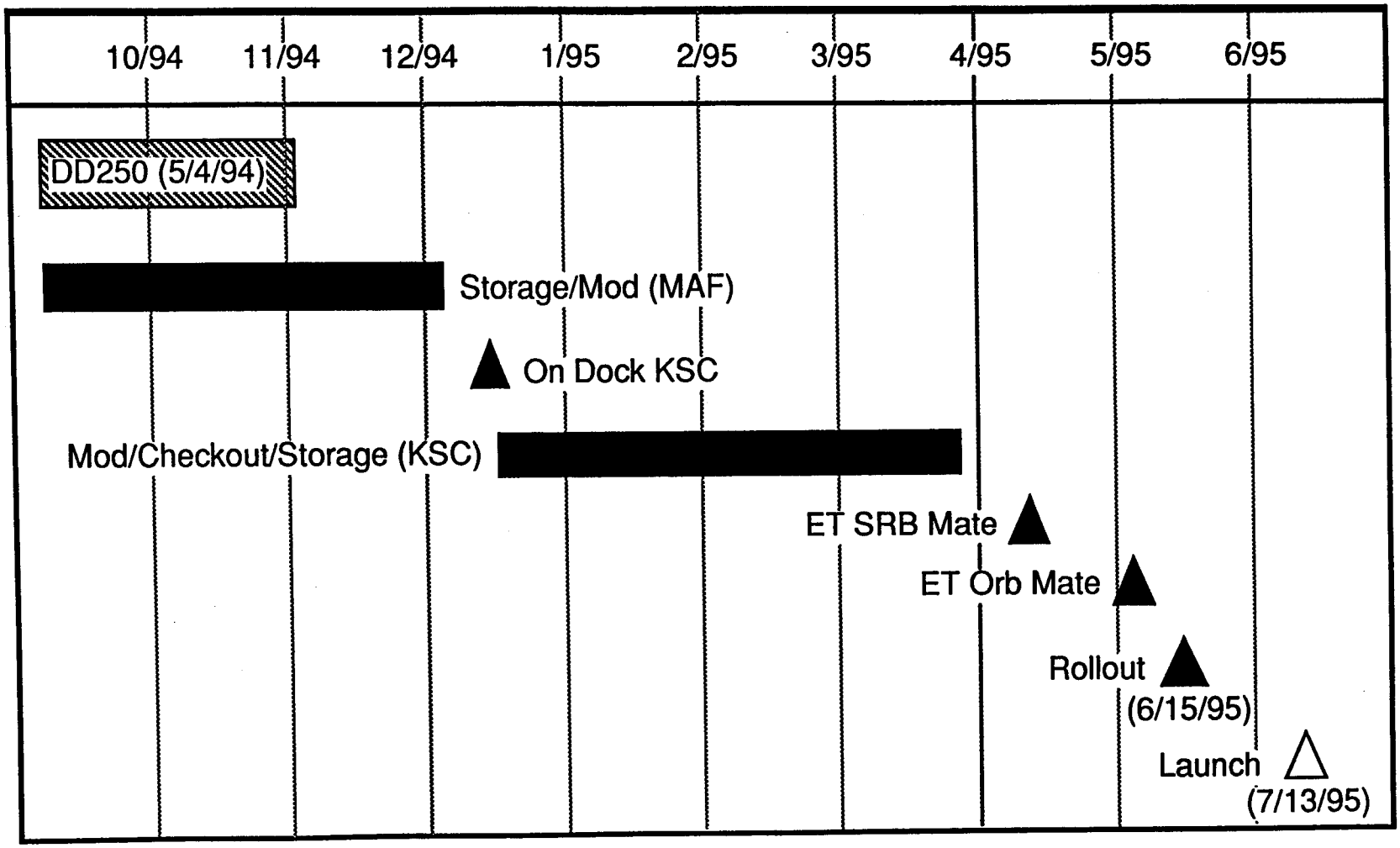

LOCKHEED MARTIN

Manned Space Systems

ET71/ET72ΔP.7/95.S4.1

ET-71 Planned Work

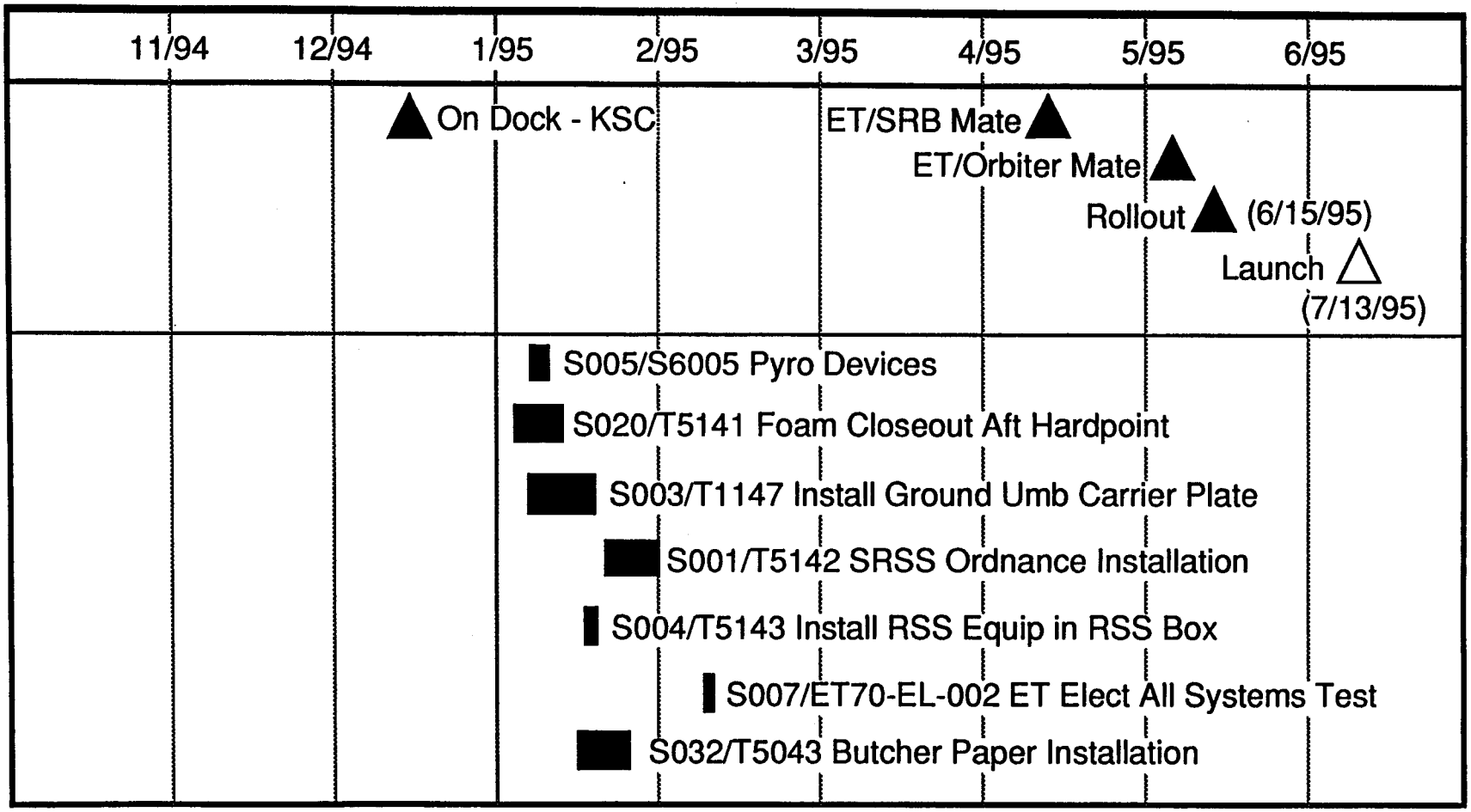

ET-71 Planned Work

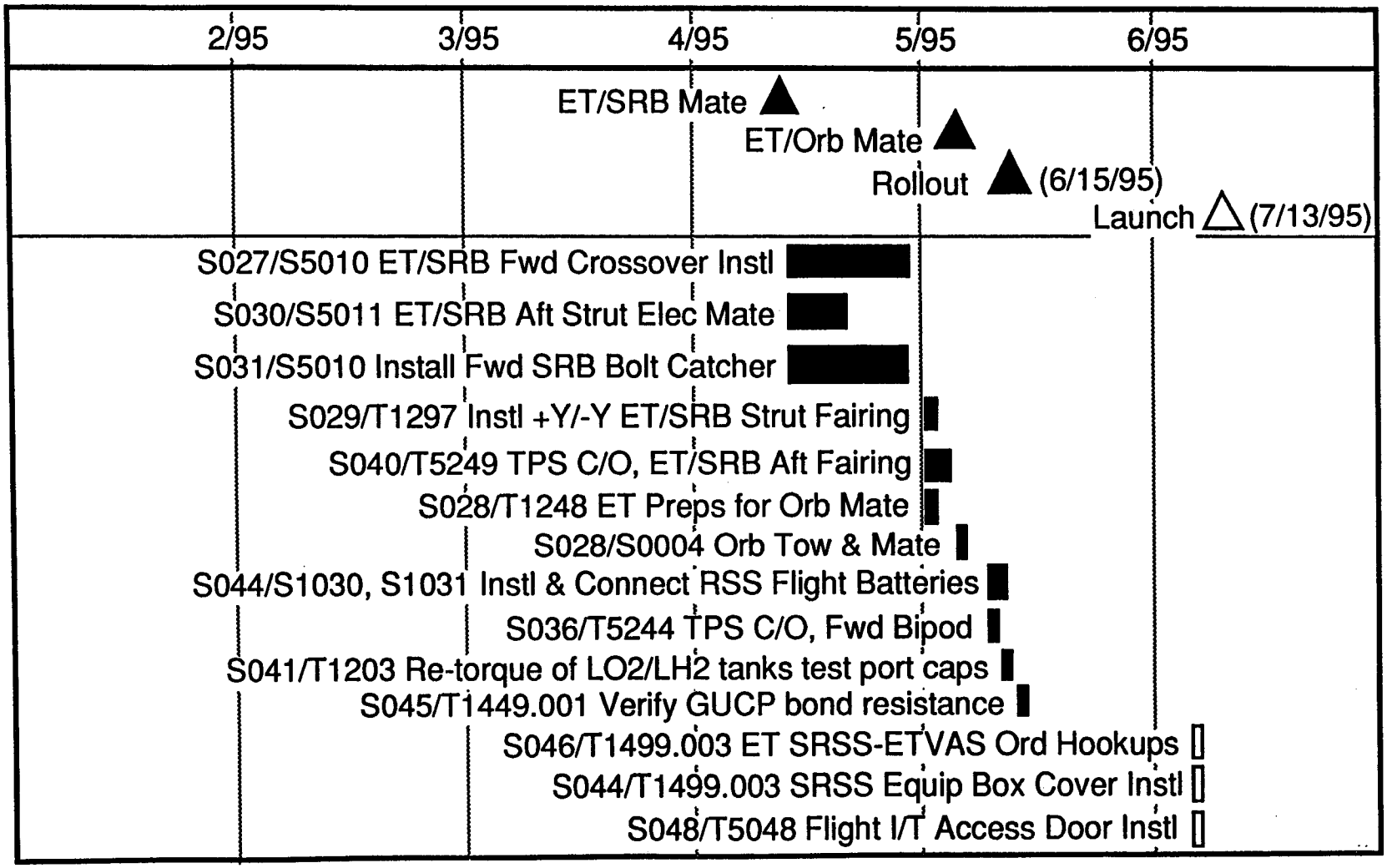

ET-71 DR/PR/OMRSD Waiver/Exception - Summary

C4

as of 6/29/95

System	Discrepancy Total	Problem Total	MRB Items Total	MRB Items Open	Waivers/Exceptions Total	Waivers/Exceptions Open
• Electrical	1	1	**0**	0	0	0
• Propulsion/ Pneumatics	0	6	**3**	0	0	0
• Range Safety	0	1	**0**	0	0	0
• Structures	5	12	**3**	0	0	0
• Thermal (TPS)	6	28	**5**	4	0	0
Total	**8**	**48**	**11**	**4**	**0**	**0**

PR/MRB History

(1994 - 1995)

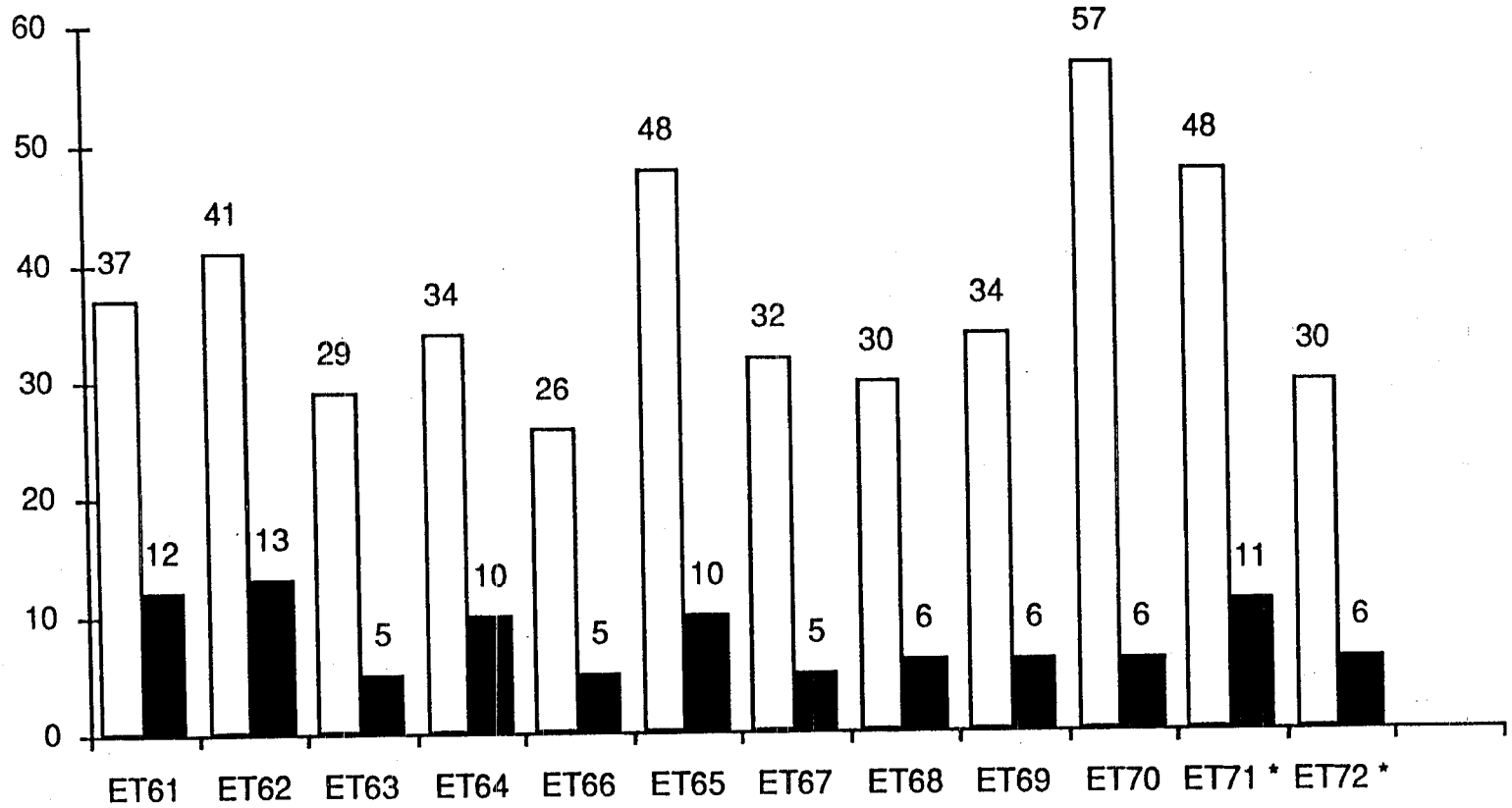

Total PRs
Total MRBs

* Incomplete data

LOCKHEED MARTIN

Manned Space Systems

ET71/ET72ΔP.7/95.S4.5

ET-71 PR/MRBs - Summary

Thermal

PR No./Status	Title/Description	Disposition
PET-71-TS-0014 Closed	Fire barrier applied to +Z LH2 umbilical out of application parameters • Should be 70% max • RH actual 84%	• Use as is • No evidence of flaking, peeling or blistering
PET-71-TS-0019 * Open	No red dye used to determine depth of defects	• Use as is - Known cause of damage - No visual evidence of damage foam remained

* Previously discussed as Special Topic: ET-71 TPS damage/repair

ET-71 PR/MRBs - Summary

Thermal

PR No./Status	Title/Description	Disposition
PET-71-TS-0021 * Open	• Environmental requirements not met for PDL application to areas 1 and 13	• Use as is - Successful adhesion and backface heating/vacuum tests on repairs poured at high humidity (≈90%) - No condensate present based on +4°F temperature above dewpoint
	• Repair areas 3 (12.24 sq in.) and 4 (10.75 sq in.) exceeded 10 sq in.	• Use as repaired - Repairs within existing data base
	• No red dye used to determine depth of defects	• Use as is - Known cause of damage - No visual evidence of damage foam remained

* Previously discussed as Special Topic: ET-71 TPS damage/repair

ET-71 PR/MRBs - Summary

Thermal

PR No./Status	Title/Description	Disposition
PET-71-TS-0024 * Open	• No red dye used to determine depth of defects	• Use as is - Known cause of damage - No visual evidence of damage foam remained
	• Bare metal exists in areas 17, 20 and 22	• Use as is - Foam induced corrosion will be minimal due to short duration until launch - Remaining primed substrate and foam sidewalls will provide sufficient adhesion
PET-71-TS-0025 * Open	• No red dye used to determine depth of defects	• Use as is - Known cause of damage - No visual evidence of damage foam remained
	• Repairs performed using SLA Type II/ PDL as a substitute for NCFI	• Use as repaired - SLA/PDL combination will provide adequate thermal protection

* Previously discussed as Special Topic: ET-71 TPS damage/repair

ET-71 Limited Life Components

Cycle Sensitive

Description	Part No.	Serial No.	Limit	Required	Remaining
LH2 Manhole Cover Assy	80914081488 -019	00000195	100	1	100
LO2 Tank Mechanical Assy	80912002000 -019	00000066	100	1	100
LH2 Tank Mechanical Assy	80914002000 -009	00000064	100	1	100
LO2 Manhole Cover Assy	80911001205 -010	00000167	100	1	100
LO2 Fwd Ogive Cover Plate	80911001207 -029	00000203	100	1	100
LH2 Manhole Cover Assy (Aft Dome)	80911001444 -010	00000354 00000355	100 100	1 1	100 100

ET-71 Limited Life Components

Age Sensitive

Description	Part No.	Serial No.	Limit	Initiation	Expiration
External Tank	80901000000 -270	00000064	6 Yrs	5/94	5/2000
RSS Battery A	10406-0133 -801	2000140	2 Yrs 90 Days	12/93 5/2/95	12/95 * 7/95 **
RSS Battery B	10406-0133 -801	2000143	2 Yrs 90 Days	12/93 5/95	12/95 * 7/95 **

* Shelf Life
** Operating Limit

ET-71 Limited Life Components

Age Sensitive Pyrotechnics - 10 Years Life/Requires Lot Verification Tests After 4 and 7 Years

Description	Part No.	Lot No.	Serial No.	Latest Retest	Expiration
Confined Detonating Fuse	10315-0002 -825	AAB	309	1/93	3/96
	-826	AAB	262	1/93	3/96
	-827	AAB	218	1/93	3/96
	-828	AAB	175	1/93	3/96
	-831	AAB	450	1/93	3/96
Confined Detonating Fuse	10312-0001-106	AAT	2002025	11/94	3/98
Manifold	10312-0001-107	AAT	2002065	11/94	3/98
Safe & Arm Device	10311-0001-803	AAG	1000374	6/91	8/95 *
NSD	SEB26100094 -201	JHR	0620	8/92	8/96
		JHS	0132	7/92	7/96

* Lot acceptance test completed - Certification sheet in work to update to 8/98

ET-71 Limited Life Components

Age Sensitive Pyrotechnics - 10 Years Life/Requires Lot Verification Tests After 4 and 7 Years

Description	Part No.	Lot No.	Serial No.	Latest Retest	Expiration
Separator Assy GUCP	PD500020 -059	AAF	0000821	5/92	5/96
Cartridge Assy	PD500020 -030	AAF AAF	69968 69969	5/92 5/92	5/96 5/96
Linear Shaped Charge	PD500016 -050	AAJ	0001573	6/95	6/98

ET-71 Modification Summary

No.	Description	Status
Mod Kit		
B489/B01945B	Enhanced jack pad closeout process at KSC	Complete
DC&R		
P-95-001	Inspect helium inject tube assembly	Complete - MRB to use as is

ET-72 Processing Schedule

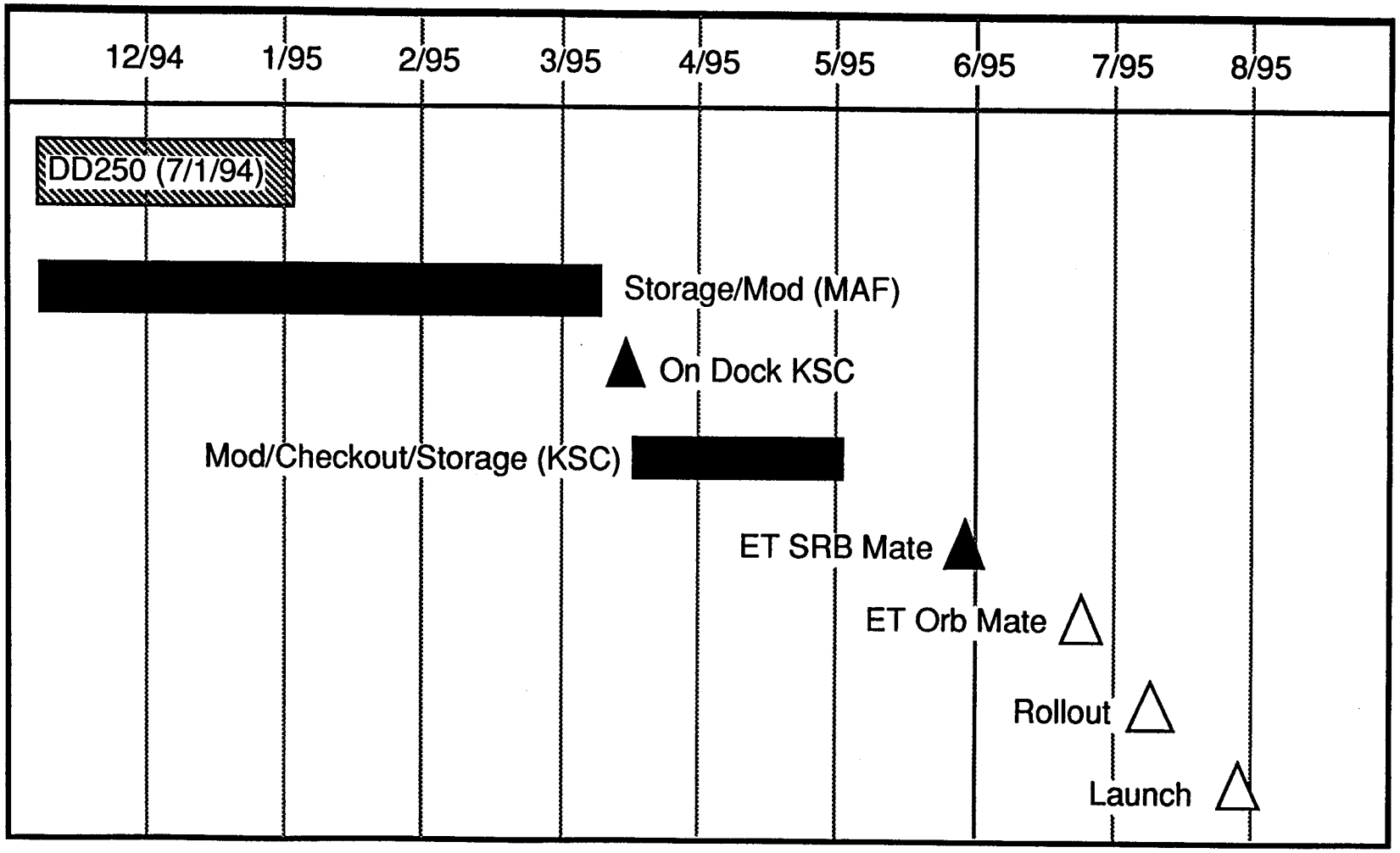

ET-72 Planned Work

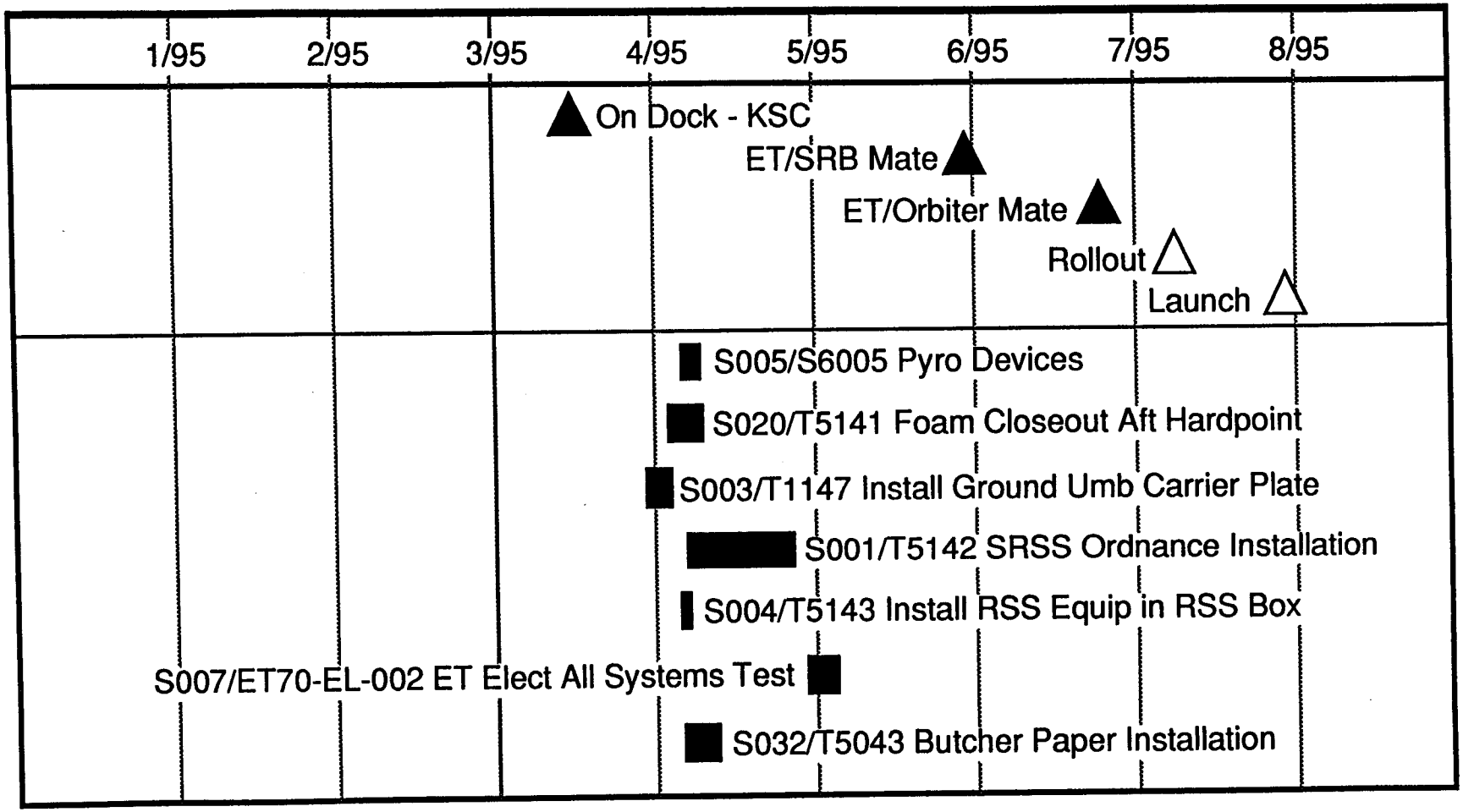

LOCKHEED MARTIN

ET-72 Planned Work

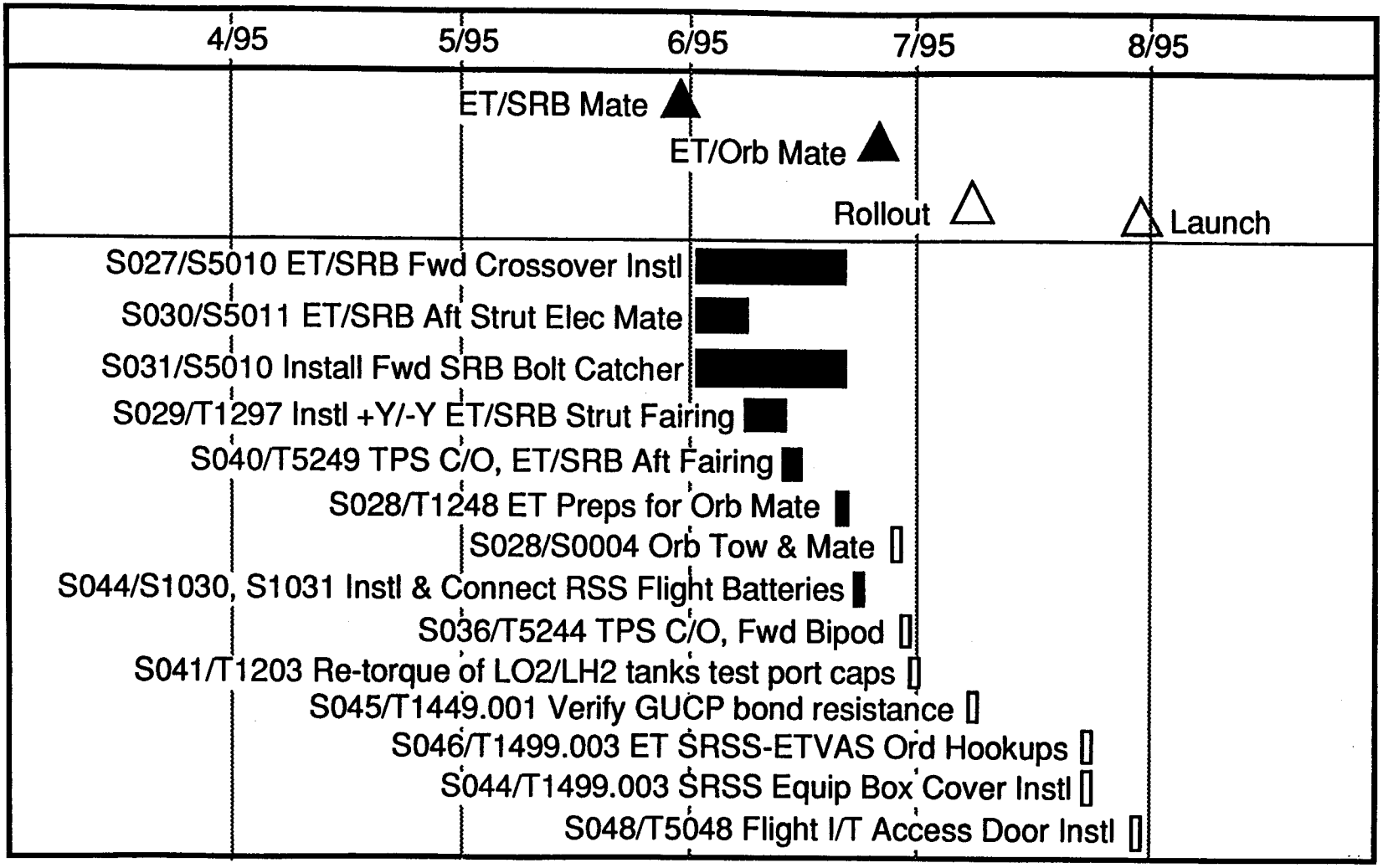

ET-72 DR/PR/OMRSD Waiver/Exception - Summary

as of 6/29/95

System	Discrepancy Total	Problem Total	MRB Items Total	MRB Items Open	Waivers/Exception Total	Waivers/Exception Open
• Electrical	0	0	0	0	0	0
• Propulsion/ Pneumatics	0	5	2	0	0	0
• Range Safety	0	0	0	0	0	0
• Structures	5	8	2	0	0	0
• Thermal (TPS)	2	17	1	1	0	0
Total	7	30	5	1	0	0

ET-72 PR/MRBs - Summary

PR No./Status	Title/Description	Disposition
Propulsion		
PET-72-FP-0001 Closed	Inspect helium inject tube assembly (DC&R P-95-001)	• Use as is - Inspection completed • Tube diameter exceeded 0.480" requirement to maintain adequate thermal protection
PET-72-FP-0005 Closed	Crush washers installed in the GH2 vent valve tube assembly/fitting connections	• Use as is • MRB documents configuration change

ET-72 PR/MRBs - Summary

PR No./Status	Title/Description	Disposition
Structure		
PET-72-ST-0009 Closed	Bipod yoke - Several scratches on yoke titanium fitting	• Use as is - Mold impression measured less than 0.001"
Thermal		
PET-72-TS-0018 Open	LH2 tank foam acreage - PDL repair of damaged CPR located outboard of -Y aft SRB fairing is >10 sq in.	• Use as is - Repair within MAF data base - PDL provides adequate protection for thermal environments

ET-72 Limited Life Components

Cycle Sensitive

Description	Part No.	Serial No.	Limit	Required	Remaining
LH2 Manhole Cover Assy	80914081488 -019	00000196	100	1	100
LO2 Tank Mechanical Assy	80912002000 -019	00000067	100	1	100
LH2 Tank Mechanical Assy	80914002000 -009	00000065	100	1	100
LO2 Manhole Cover Assy	80911001205 -010	00051530	100	1	100
LO2 Fwd Ogive Cover Plate	80911001207 -029	00000205	100	1	100
LH2 Manhole Cover Assy (Aft Dome)	80911001444 -010	00000360 00000361	100 100	1 1	100 100

ET-72 Limited Life Components

Age Sensitive

Description	Part No.	Serial No.	Limit	Initiation	Expiration
External Tank	80901000000 -270	00000065	6 Yrs	5/94	5/2000
RSS Battery A	10406-0133 -801	2000144	2 Yrs 90 Days	12/93 6/95	12/95 * 9/95 **
RSS Battery B	10406-0133 -801	2000145	2 Yrs 90 Days	12/93 6/95	12/95 * 9/95 **

* Shelf Life
** Operating Limit

ET-72 Limited Life Components

Age Sensitive Pyrotechnics - 10 Years Life/Requires Lot Verification Tests After 4 and 7 Years

Description	Part No.	Lot No.	Serial No.	Latest Retest	Expiration
Confined Detonating Fuse	10315-0002 -825	AAB	310	1/93	3/96
	-826	AAB	263	1/93	3/96
	-827	AAB	219	1/93	3/96
	-828	AAB	176	1/93	3/96
	-831	AAB	451	1/93	3/96
Confined Detonating Fuse Manifold	10312-0001-106	AAT	2002026	11/94	3/98
	10312-0001-107	AAT	2002027	11/94	3/98
Safe & Arm Device	10311-0001-803	AAG	1000381	6/91	8/95 *
NSD	SEB26100094	JHS	0266	7/92	7/96
	-201	JHS	0267	7/92	7/96

* Lot acceptance test completed - Certification sheet in work to update to 8/98

ET-72 Limited Life Components

Age Sensitive Pyrotechnics - 10 Years Life/Requires Lot Verification Tests After 4 and 7 Years

Description	Part No.	Lot No.	Serial No.	Latest Retest	Expiration
Separator Assy GUCP	PD500020 -059	AAF	0000823	5/92	5/96
Cartridge Assy	PD500020 -030	AAF AAF	69996 69997	5/92 5/92	5/96 5/96
Linear Shaped Charge	PD500016 -050	AAJ	0001714	6/95	6/98

ET-72 Modification Summary

No.	Description	Status
Mod Kit		
B490/B01945B	Enhanced jack pad closeout process at KSC	• Part 1 - BX trim complete • Part 2 - To be completed after S0004
E128/B02006	RSS ground checkout cable assembly modification	Work complete
DC&R		
P-95-001	Inspect helium inject tube assembly	Measurements complete - MRB to use as is in work
Bldg. 45		
B0682R1	KSC scale weigh non flight items	In work- Will continue after S0004

Delete Aft LO2 Feedline Bracket Heaters (B01937)$_{D1}$

Change:

- Delete aft LO2 feedline bracket heaters
  - LCC changed to allow up to 100 sq. in. of ice formation on LO2 feedline brackets
  - OMRS changed for STS-45 to delete heater test, checkout and activation at KSC (Previously presented at STS-45/ET-44 Delta ET Project FRR, 2/21/92)
  - MAF test and checkout requirements (TM04) revised ET 64 and up to eliminate testing of heaters and associated cabling (Previously presented at Block 11 ET Project FRR, 8/10/94)

Reason:

- Thermal analysis indicates that worst case ice formation with unheated aft LO2 feedline brackets would be 61.3 sq in.
  - Heaters and associated cabling no longer required

Basis for Certification:

- Thermal analysis - Ice/frost formation in this area is within acceptable limits

Generic Cert for ET Thermal Environments

Change:

- PRCBD S052638 directed implementation of generic thermal environments for ET certification

Background/ Reason:

- Eliminates requirement for mission unique thermal assessments/ certification
  - Reshaped trajectories resulted in:
    - Decrease in heating environments for forward LO2 tank
    - Increase in heating environments for protuberances
  - Assessment of environments identified need for:
    - Minor TPS design changes
    - Addition of allowable debris catalog to NSTS 07700,Vol. X

Description:

- Documentation
  - Revised NSTS 07700, Volume X to include an ET allowable debris catalog
    - Preclude significant redesign due to potential exceedance of maximum allowable bondline temperatures
    - Does not compromise ET structural integrity
  - Revised ICD to reflect new protuberance configurations
  - Revised CIL and Hardware Certification Sheets to reflect updated part numbers

Generic Cert for ET Thermal Environments

Basis for Certification:

- Analysis
  - Thermal
  - Stress: All hardware meets design FS requirements
  - Venting
- Similarity - TPS materials previously qualified for similar applications

DOLILU II Low Q Impact Assessment for LWT

DOLILU II Low Q Impact Assessment for LWT

Background:

- **DOLILU I Processor**
  - Trajectory steering modified by DOL wind data
    - Reduced adverse pitch and yaw effects
    - FRR/FMA are done on nominal trajectory
- **DOLILU II Processor**
  - Modifies thrust as well as steering that affect trajectory
    - No nominal trajectory
    - No FRR/FMA assessments
    - MPS trajectory dispersions must now be stacked rather than RSS'd due to lack of nominal trajectory
- **Cost Reduction Enhancement**
  - Flight specific trajectories generated days before flight will be replaced by building a trajectory hours before flight with L-4 hour winds
  - Trajectory will be within a certification set (DOLILU II) of trajectories covering a wide range of situations previously approved

DOLILU II Low Q Impact Assessment for LWT

System Impacts:

- **Main Propulsion System (MPS)**
  - Ullage pressure effects of DOLILU II trajectories must be approved
    - Eliminates flight specific ullage pressure predictions for similarly configured flights
  - Four sets of MPS DOLILU II trajectories will eventually exist
    - Low Q for certain LWT flights prior to ISSA
      - All remaining 1995 flights and when Mid Q not needed
      - Trajectories now available
    - Mid Q for other LWT flights prior to ISSA
      - STS-75 and subs as needed
      - Trajectories available in September, 1995
    - LWT flights after 1st ISSA flight
      - Trajectories available June, 1995
    - Performance Enhancement flights (SLWT, Low to High Q)
      - Corrected trajectories available June, 1995 (deleting LSRM/ESRB and Extended Nozzle)
- **Loads**
  - DOLILU I system works with a nominal I-Load
  - DOLILU II is more basic by building the trajectory completely
  - Both systems utilize actual wind versus nominal wind for trajectory construction
  - No nominal I-Load to do an FRR assessment
    - All Rev. M Algorithms will be evaluated DOL
      - Level II complied with request to have all available

DOLILU II Low Q Impact Assessment for LWT

System Impacts (continued):

- **Thermal**
  - RI/D certification analysis indicated DOLILU II heating less than Generic Certification
    - DOL 1st Stage heating protected by Rule S-9

Change:

- **Main Propulsion System**
  - Insignificant change to LH2 ullage pressure prediction due to flow control valves with sufficient control authority to compensate for trajectory changes
  - LWT LO2 ullage pressure evaluation generic rather than flight specific
  - Trajectory effects on ullage pressure now stacked rather than RSS'd
    - Extreme trajectory cases evaluated for enveloping throttle, atmospheric temperature and acceleration effects
  - Orbiter specific maximum drainback hold time dispersions
  - Updated DOLILU II web action time dispersions (RSS'd values)
- **Loads**
  - FRR/FMA analysis not possible
  - Preflight generated trajectories replaced by trajectory created during prelaunch countdown
    - Utilizes L-4 hour balloon data
    - Minimizes the effects of wind

DOLILU II Low Q Impact Assessment for LWT

Basis for Certification:

- **Main Propulsion System (MPS)**
  - STS-70
    - Flight ullage pressure assessment complete and acceptable (One Block I and two Phase II SSMEs)
  - Generic
    - LO2 ullage pressures meet LWT requirements for all Phase II SSME DOLILU II Low Q trajectories only with expanded ICD limits
      - S060604A IRN approval received to modify ICD (5/19/95)
      - SSP Program accepted loss of margin above 1.4 FS (7% to 6%) on 3/16/95
    - Evaluation of Block I SSMEs awaiting autogeneous tag effects of ISP fixes

DOLILU II Low Q Impact Assessment for LWT

Basis for Certification (cont.):

- **Loads**
  - Revision M to the ET load indicator equations/algorithms provided for DOLILU II generic trajectory assessment
  - These equations reflect loads cases, incorporated into the design set, covering expanded throttle bucket consistent with DOLILU II
    - Incorporated multiple wind sets
  - Algorithm set has been coded and checked out by RI/D
    - Equations values match the checkout conditions supplied by Manned Space Systems
  - Test operations demo of STS-70 with a single wind produced algorithm values similar to the nominal trajectory from baseline methodology for critical indicators
    - Shows consistency of new method versus old method
  - R/I generated thousands of trajectories for generic certification of the DOLILU II system
    - Winds for all months
    - Hot and cold SRBs
  - Algorithm E3-104 showed some exceedances
  - Engine knockdown was responsible
  - Modification to knockdown approach eliminated problem
  - Knockdown methodology to be documented in NSTS 08209, Vol III
  - Launch probability for summer months was greater than 85% goal
- **Thermal**
  - ET heating is less than the generic certification DOL 1st Stage heating

DOLILU II Low Q Impact Assessment for LWT

Open Issues:

- **Main Propulsion System (MPS)**
  - Completion of LWT LO2 and LH2 ullage pressure assessment for 3 Block I SSME configuration (post STS-70)
- **Loads**
  - None

Conclusions:

- Rev. M algorithms protect the ET
- STS-70 has been cleared by MPS flight specific assessment
- DOLILU II Low Q process is an acceptable method of flying STS with Phase II SSMEs from the ET perspective

Block I SSME LO2 Ullage Pressure Assessment for LWT

Block I SSME Ullage Pressure Assessment for LWT

Change:

- Changes from current Phase II SSME hardware configuration:
  - 2-duct powerhead (Phase II was 3-duct)
  - Baffleless main injector
  - Slightly enlarged boundary layer coolant holes
  - Single coil heat exchanger
  - Alternate high pressure oxidizer turbopump

Background/ Reason:

- STS-70 (June 1995) is first flight to use Block I SSME (S/N 2036)
  - Two Phase II SSMEs (S/N 2019 and 2017)
    - Generic LWT LO2 and LH2 ullage pressure impacts uncertain due to recently corrected Block I autogeneous performance data from Rocketdyne, and still to be determined effect of ISP fix

Basis for Certification:

- STS-70 predicted LO2 and LH2 ullage pressures meet ICD requirements
- Generic LWT LO2 and LH2 ullage pressure assessments for 3 Block I SSME configuration complete by mid-August 1995

Level II Waivers - Baseline

Document/ Requirement	Authority	Paragraph	Waiver No.	Effectivity
NSTS 07700 Vol. V - Information Management Requirements				
Generic part name, type, common designation, and part manufacturer H4 code are not required for EEE parts status printout	S00127B 6/28/88	Table C.5 Item 2SR-10	6	ETs 49 and up
Data required in limited life status report is supplied in acceptance data package	S00127B 6/28/88	Table C.6 Item 2SR-7	8	ETs 49 and up
Requirement to deliver element pressure vessel historical data to EPO will remain at contractor facility	S00127B 6/28/88	Table C.6 Item 2SR-7	10	ETs 49 and up

Level II Waivers - Baseline

Document/ Requirement	Authority	Paragraph	Waiver No.	Effectivity
NSTS 07700 Vol. X - Space Shuttle Flight and Ground System Specification , Book 1 Requirements				
Electrical wiring of redundant systems NSTS 08080-1, 20A/4B	S40732G 6/18/88	Table 2.0	362	ETs 23, 27-29, 31 and up
Electrical bonding per MIL-B-5087B (2)	S040732M 9/9/88	3.6.14	378	ETs 23, 27-29, 31 and up
Soldering, circuit boards & connectors	S040732M 9/9/88	3.6.15.1.1	379	ETs 23, 27-29, 31 and up
PD7400106 circuit boards	S040732M 9/9/88	3.6.15.2.1	382	ETs 23, 27-29, 31 and up
PCM MUX and pressure transducer circuit boards	S040732M 9/9/88	3.6.15.2.1	383	ETs 23, 27-29, 31 and up
Range safety system compliance with AFETRM 127-1 and SAMTECM 127-1	S94934 9/10/88	3.5.4.12	388	ETs 23, 27-29, 31 and up

Level II Waivers - Baseline

Document/ Requirement	Authority	Paragraph	Waiver No.	Effectivity
NSTS 07700 Vol. X - Space Shuttle Flight and Ground System Specification , Book 1 Requirements				
CIL fail safe and redundancy requirements	S040201E 4/3/87	3.5.1.1.1 Thru 3.5.1.1.3	401	ETs 23, 27-29, 31 and up
Soldering of electrical connectors	S094779C 2/21/91	3.6.15.1.1	573	ETs 37, 41 and up

Level II Waivers - Baseline

Document/ Requirement	Authority	Paragraph	Waiver No.	Effectivity
NSTS 08060, Rev. F - System Pyrotechnic Specification				
Design pyrotechnics for reliability - No redundant tumble valve	S003422E 6/24/88	3.1	60	ETs 23, 27-29, 31 and up
Use 40M36298 connectors	S040732F 6/24/88	3.4.1	61	ETs 23,27-29, 31 and up
Epoxy to separate dissimilar metals on LSCs	S040732F 6/24/88	3.5.8	62	ETs 23, 27-29, 31 and up
Circuit resistance check not required after connector mate in tumble system	S040732F 6/24/88	7.3	63	ETs 23, 27-29, 31 and up
Prevent adverse effects of common mode currents	S040732F 6/24/88	8.2.1	64	ETs 23, 27-29, 31 and up

Level II Waivers - Baseline

Document/ Requirement	Authority	Paragraph	Waiver No.	Effectivity
NSTS 08060, Rev. F - System Pyrotechnic Specification				
Fire circuit wiring shall be routed separately	S040732F 6/24/88	8.2.3	65	ETs 23, 27-29, 31 and up
NSTS 07700-10-MVP-01 - Shuttle Master Verification Plan				
Environmental acceptance of ET components	S002130H 3/7/89	3.7.1	13	ETs 23, 27-29, 31 and up
NSTS 08123, Rev. B - Certification of Flexible Hoses and Bellows				
LH2 feedline bellows	S0052023G-R1 8/2/91	1.2	3	ETs 42 - 45, 47 and up

Level II Waivers - Baseline

Document/ Requirement	Authority	Paragraph	Waiver No.	Effectivity
SL-E-0001 - Specification Electromagnetic Compatibility Requirement				
Wire marking is not applicable to the ET	S40732K 9/27/88	3.2.5	3	ETs 23, 27-29, 31 and up
SW-E-0002 - Ground Support Equipment General Design Requirements				
Factor of safety applied to yield for GUCP leg	S87020L 8/17/88	3.4.2.1	21	ETs 23, 27-29, 31 and up

Level III Deviations - Baseline

Document/Requirement	Paragraph	DAR No.	Effectivity
Ultimate and yield factors of safety below requirement for pressurized lines less than 1.5" dia • Actual: 1.37 and 1.01 • Requirement: 1.5 and 1.25	3.2.1.5.2.2	219	ETs 66 and 71 thru 75

Special Topic: ET-71 TPS Damage/Repairs

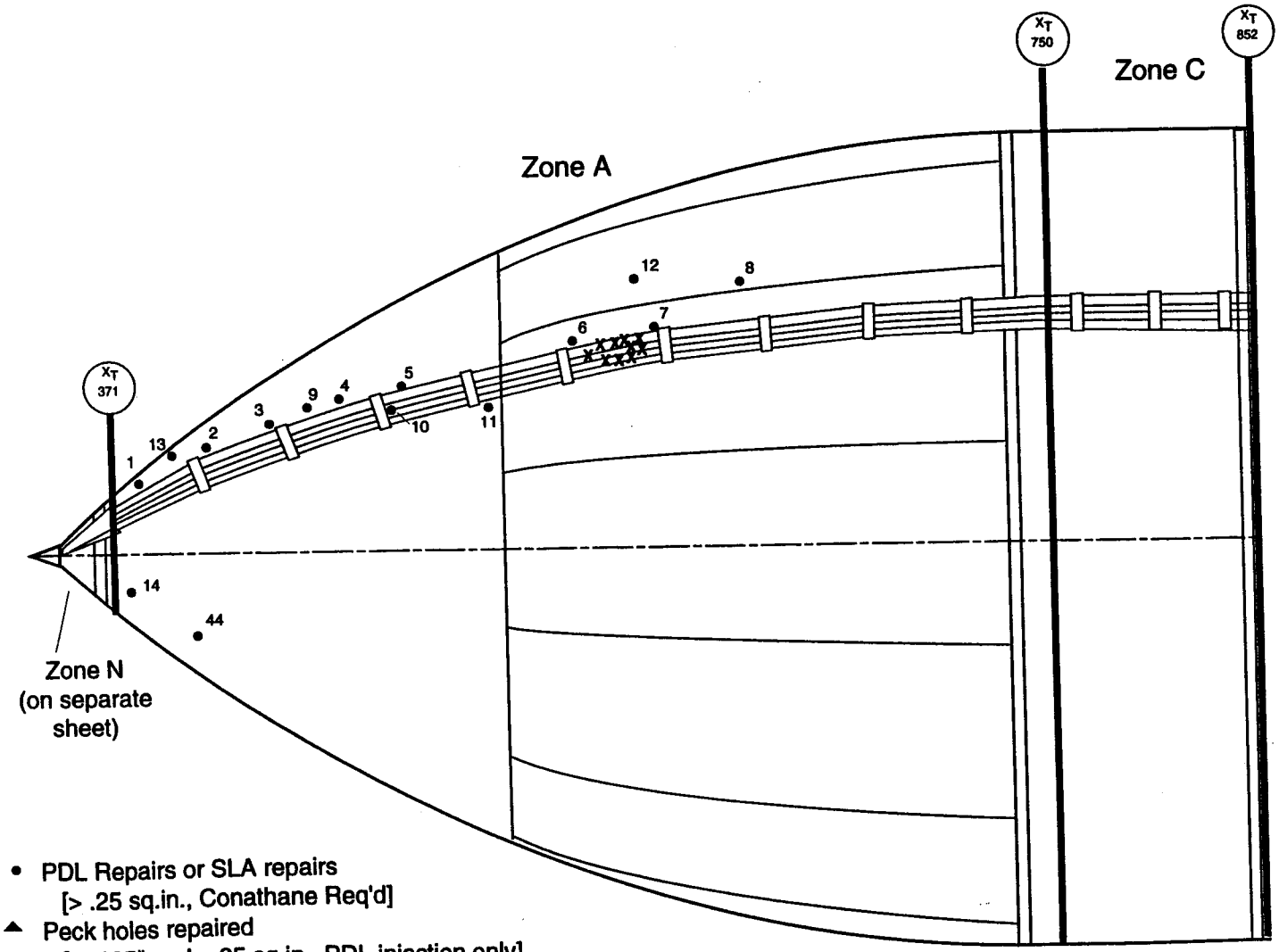

- • PDL Repairs or SLA repairs
  [> .25 sq.in., Conathane Req'd]
- ▲ Peck holes repaired
  [> .125" and <.25 sq.in., PDL injection only]
- X Peck holes not repaired
  [< .125"]

LO2 Tank C/T Run View

LOCKHEED MARTIN

Special Topic: ET-71 TPS Damage/Repairs

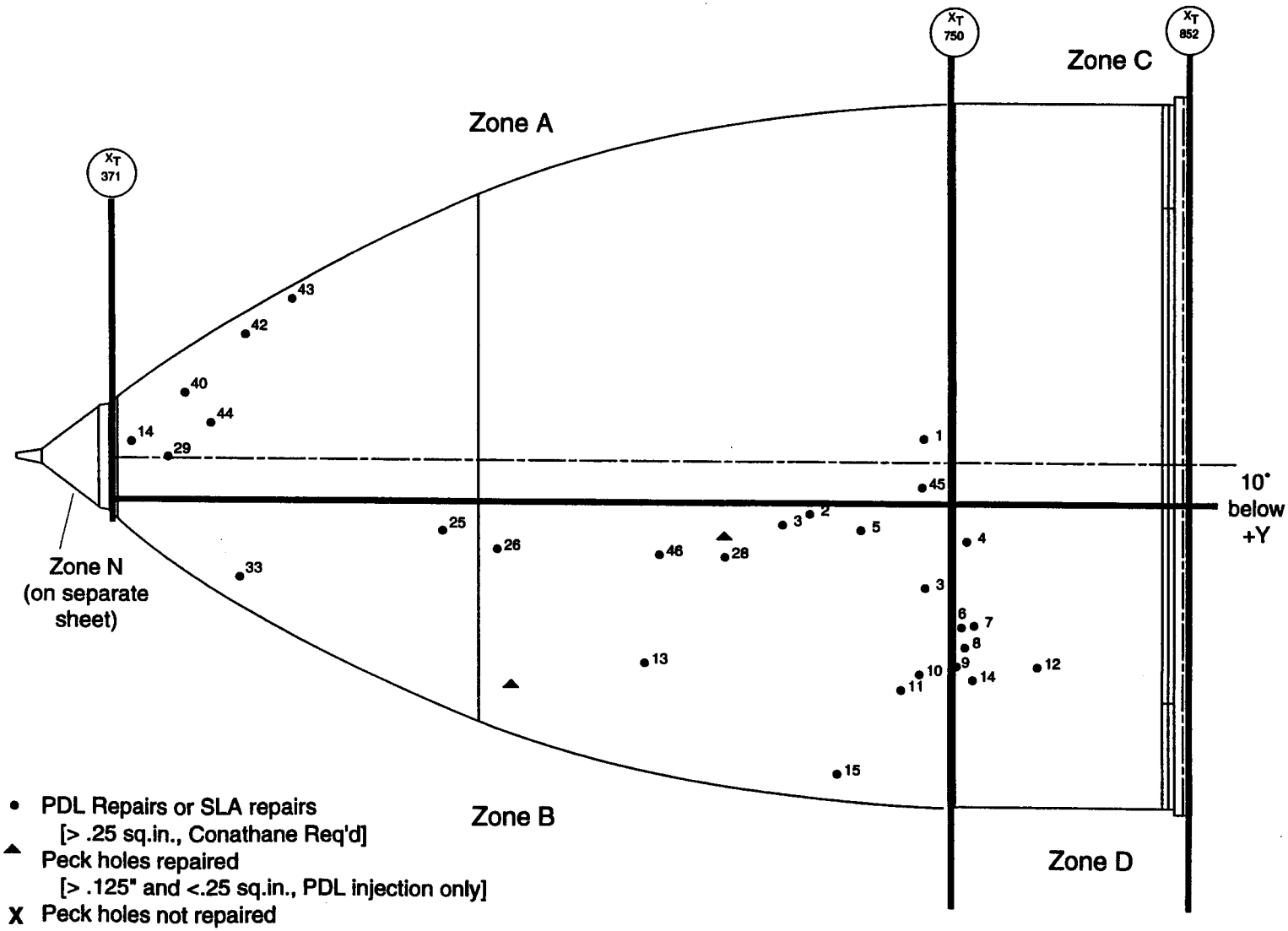

- • PDL Repairs or SLA repairs
  [> .25 sq.in., Conathane Req'd]
- ▲ Peck holes repaired
  [> .125" and <.25 sq.in., PDL injection only]
- X Peck holes not repaired
  [< .125"]

LO2 Tank +Y View

Special Topic: ET-71 TPS Damage/Repairs

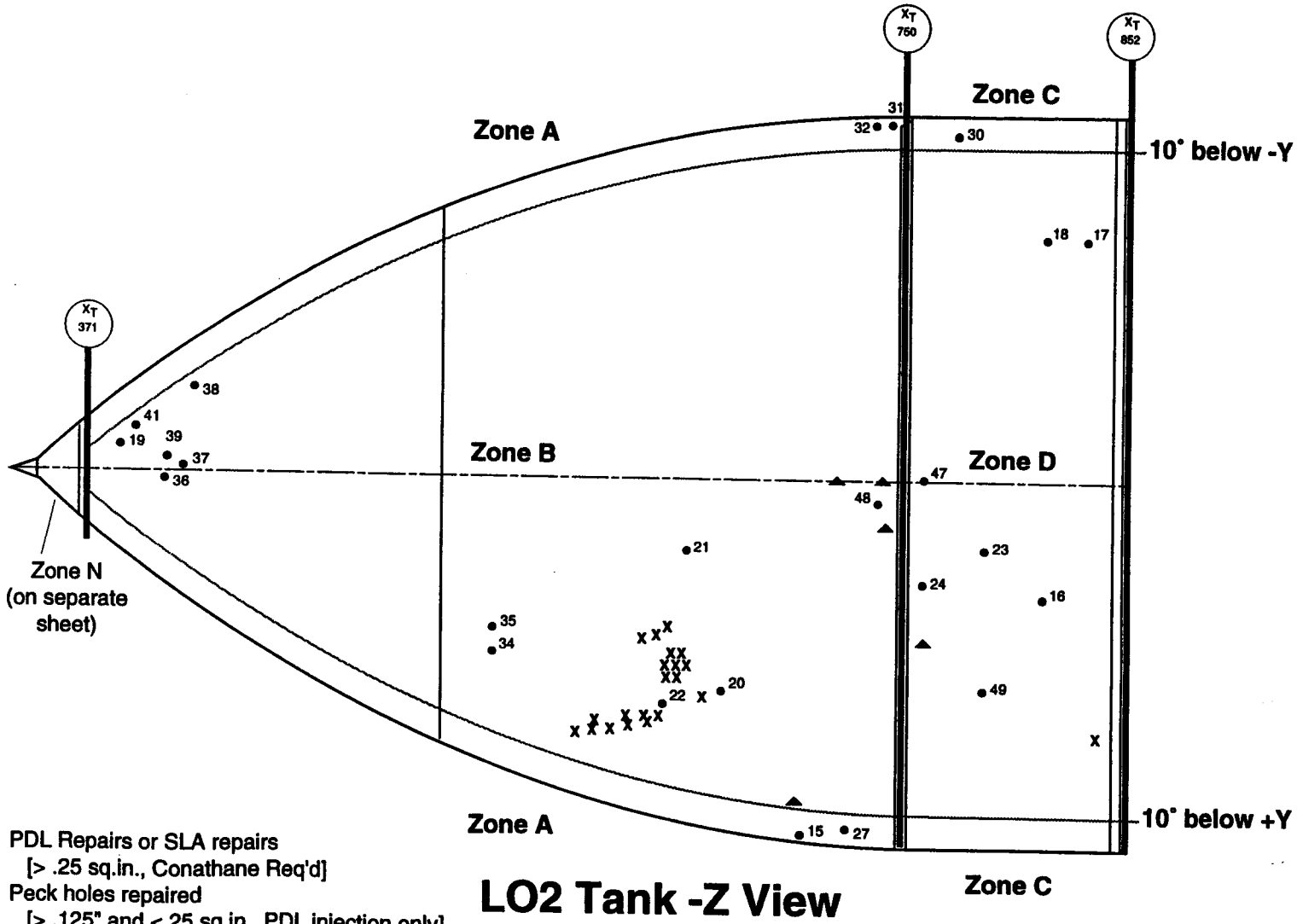

- • PDL Repairs or SLA repairs
  [> .25 sq.in., Conathane Req'd]
- ▲ Peck holes repaired
  [> .125" and <.25 sq.in., PDL injection only]
- X Peck holes not repaired
  [< .125"]

LO2 Tank -Z View

LOCKHEED MARTIN

Special Topic: ET-71 TPS Damage/Repairs

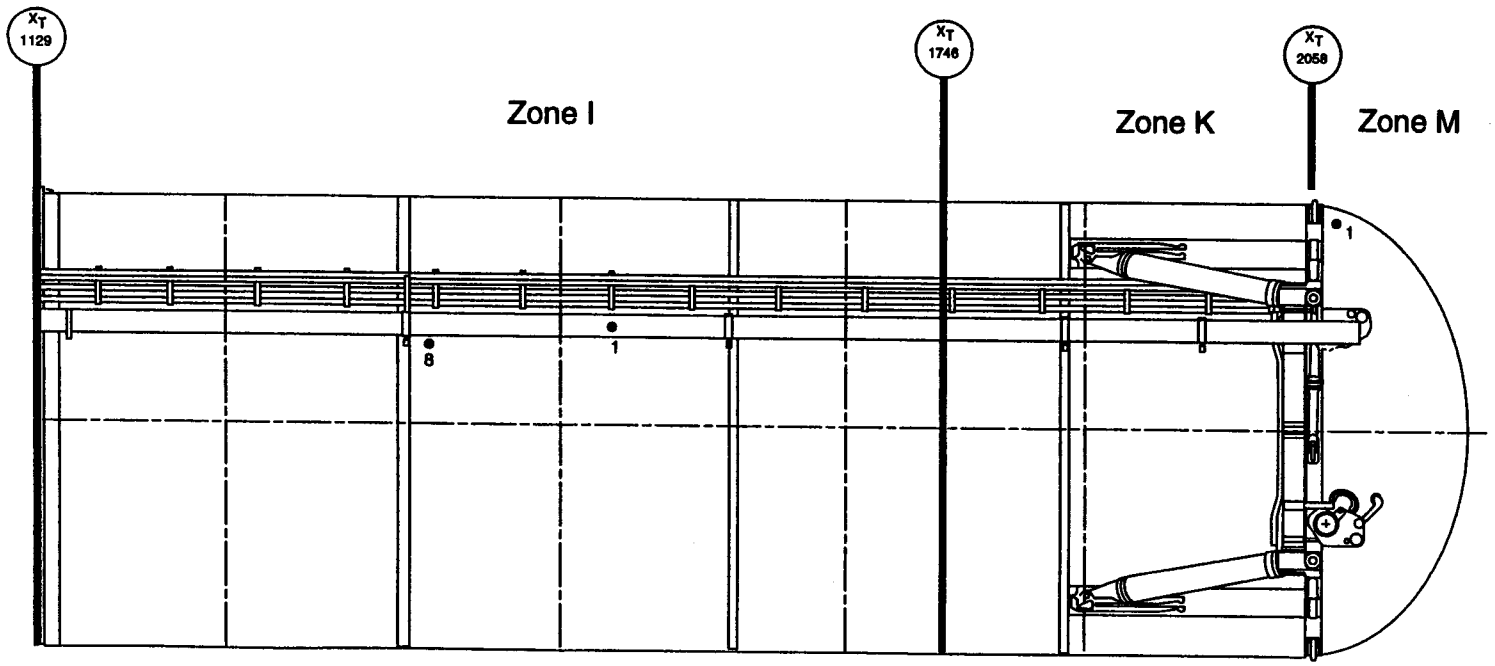

- • PDL Repairs or SLA repairs
  [> .25 sq.in., Conathane Req'd]
- ▲ Peck holes repaired
  [> .125" and <.25 sq.in., PDL injection only]
- X Peck holes not repaired
  [< .125"]

LH2 Tank +Z View

Special Topic: ET-71 TPS Damage/Repairs

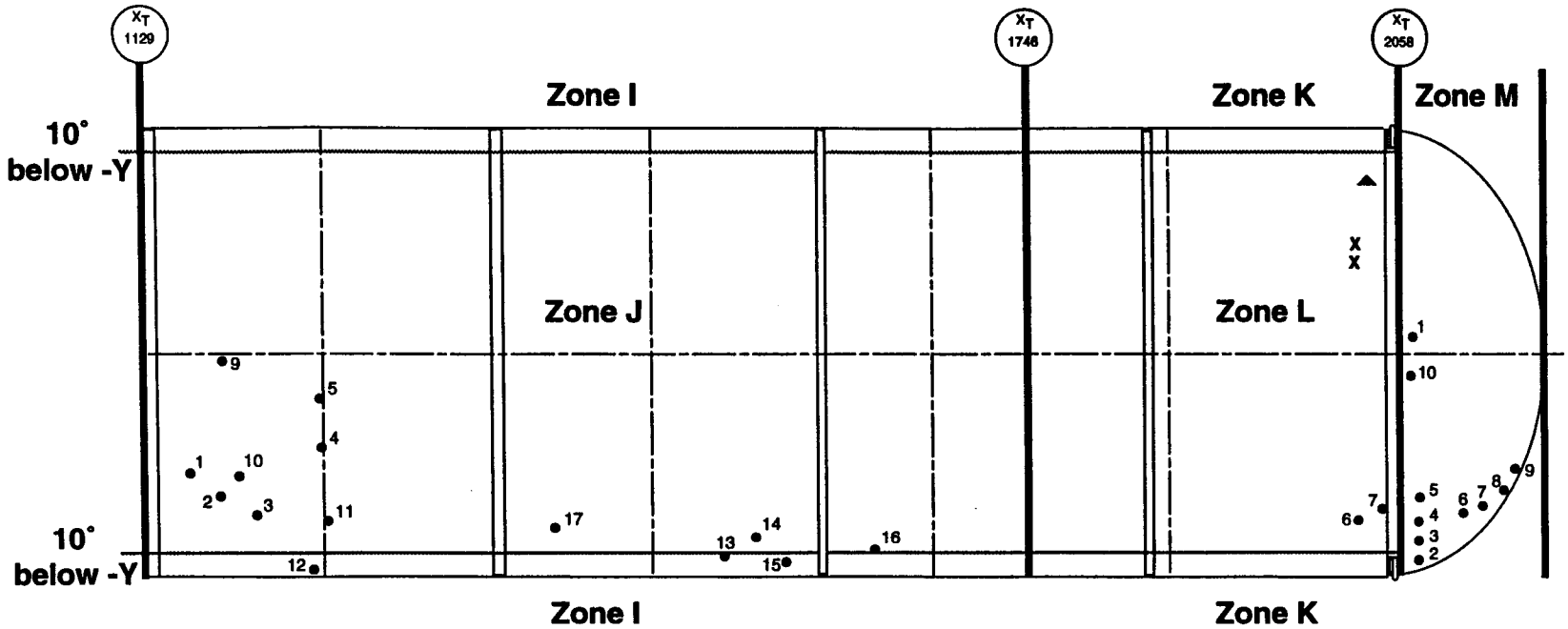

LH2 Tank -Z View

- • PDL Repairs or SLA repairs [> .25 sq.in., Conathane Req'd]
- ▲ Peck holes repaired [> .125" and <.25 sq.in., PDL injection only]
- X Peck holes not repaired [< .125"]

Special Topic: ET-71 TPS Damage/Repairs

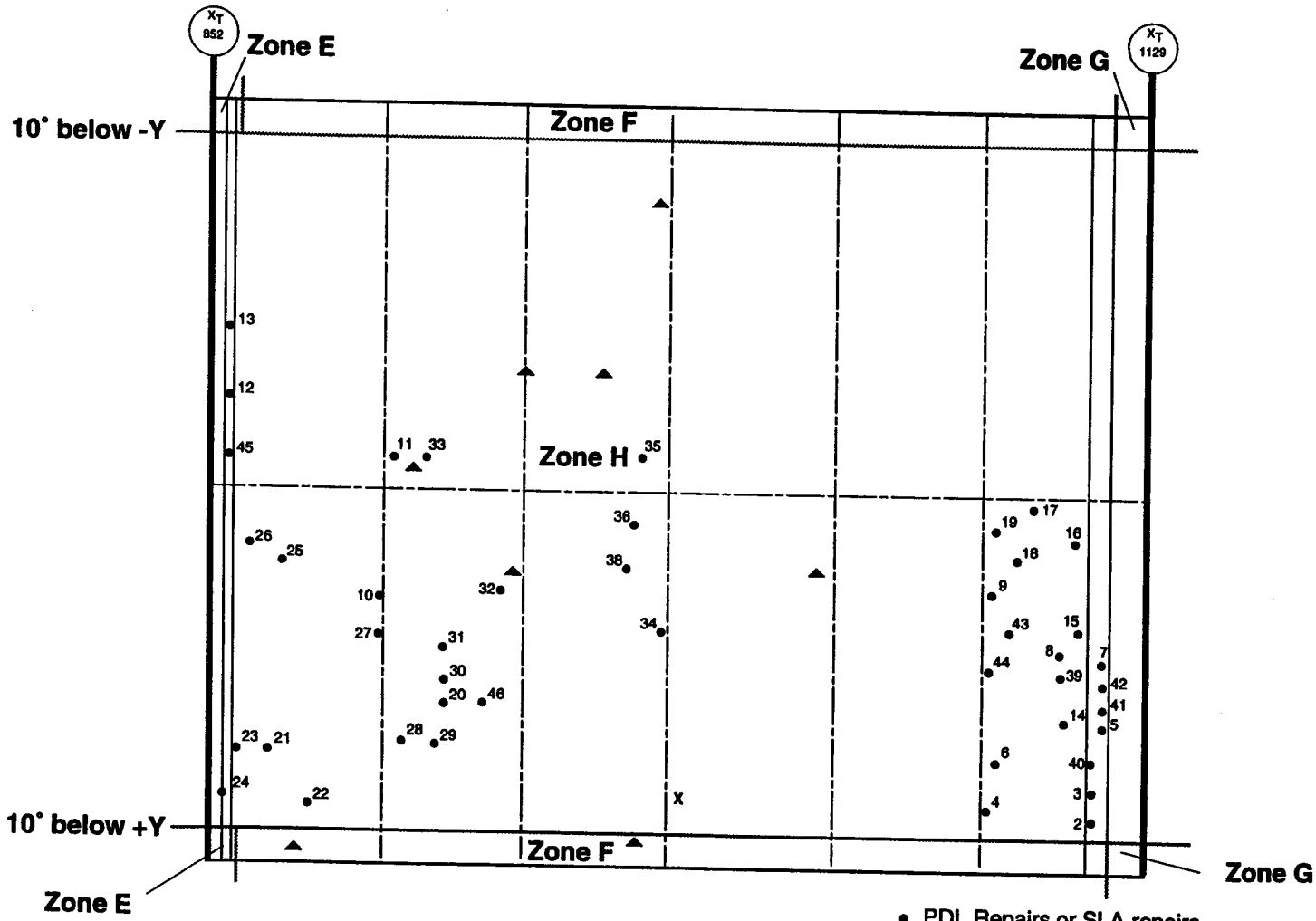

Intertank -Z View

- • PDL Repairs or SLA repairs [> .25 sq.in., Conathane Req'd]
- ▲ Peck holes repaired [> .125" and <.25 sq.in., PDL injection only]
- X Peck holes not repaired [< .125"]

Special Topic: ET-71 TPS Damage/Repair

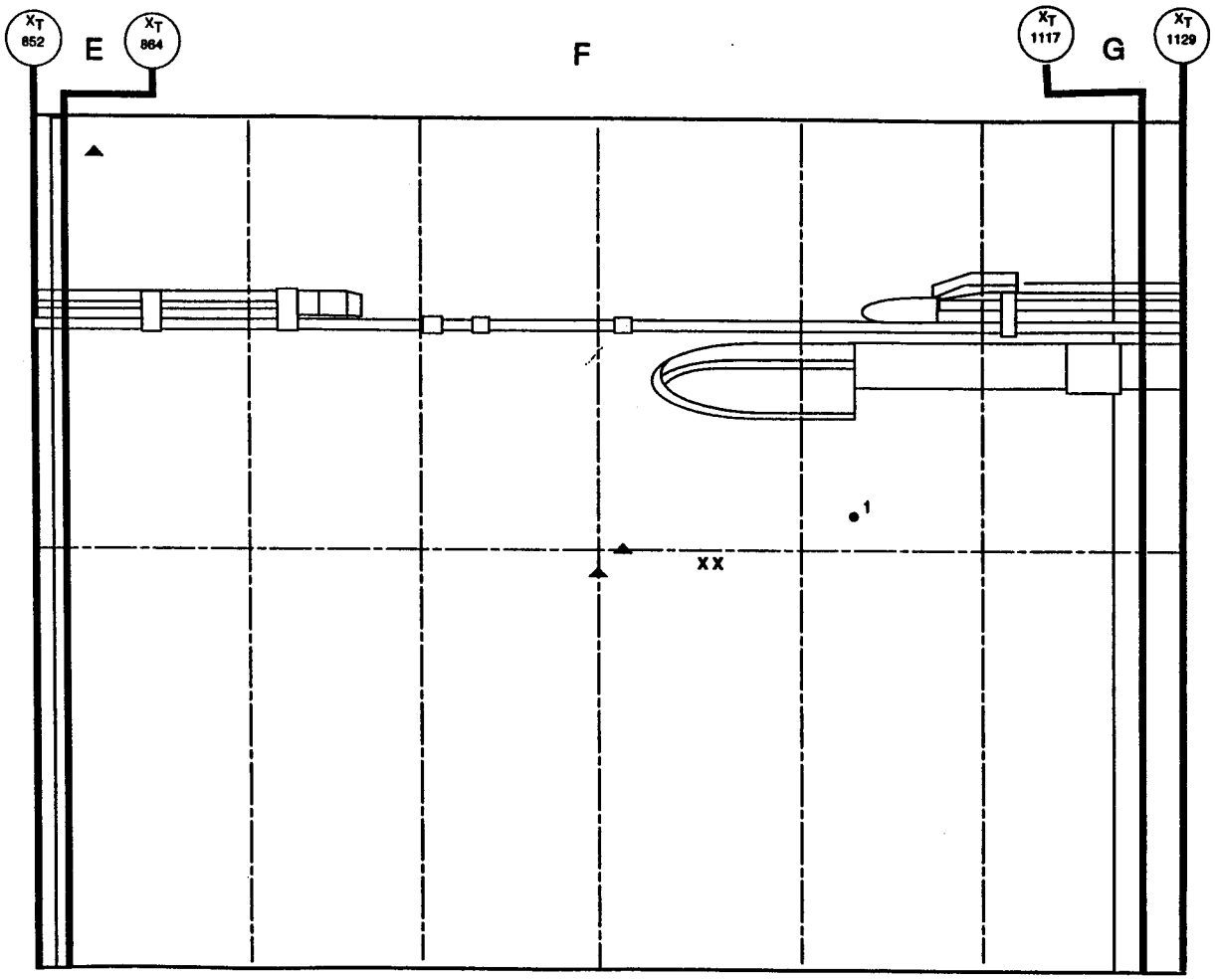

Intertank +Z View

- ● PDL Repairs or SLA repairs
  [> .25 sq.in., Conathane Req'd]
- ▲ Peck holes repaired
  [> .125" and <.25 sq.in., PDL injection only]
- X Peck holes not repaired
  [< .125"]

Special Topic: ET-71 TPS Damage/Repair

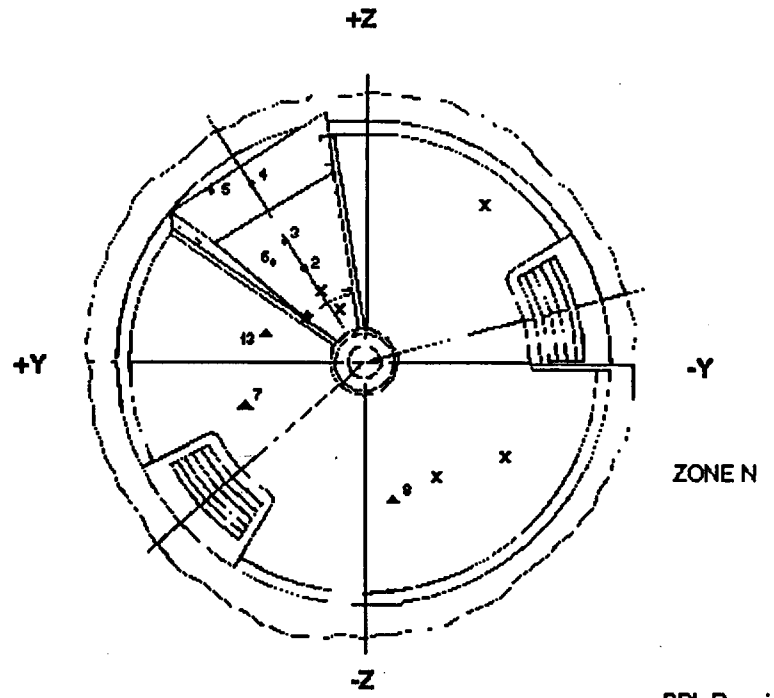

Nosecone Top View

- • PDL Repairs or SLA repairs
  [>.25 sq.in., Conathane Req'd]
- ▲ Peck holes repaired
  [>.125' and <.25 sq.in., PDL injection only]
- X Peck holes not repaired
  [<.125']