GS Yuasa LSE12x Cell and Battery Update

Prepared for
NASA Battery Workshop 2023

November 14-16, 2023

Curtis Aldrich, George Bergmark, Tom Pusateri - GYLP
Go Honda, Hiroki Fuse, Masazumi Segawa - GYT

© 2023 by GS Yuasa Lithium Power Inc. NASA Battery Workshop 2023

Topics

- GS Yuasa corporate introduction & experience supporting critical space applications
- Gen 4 Space Cell Li-ion design and qualification status
- LSE12x cell introduction
- LSE12x performance compared to COTS 18650 cells
- MA12x battery and manufacturing capability at GYLP (Roswell, Ga, USA)

© 2023 by GS Yuasa Lithium Power Inc.

GS Yuasa Company Overview

GS YUASA

GS (Japan Storage Battery)

Inventor's spirit
contribute to society by developing high quality products

Founder of Japan Storage Battery Co., Ltd.
Genzo Shimadzu

Contributing to the steady supply of electric power and the development of public infrastructure

1900s
Manufacture of large-capacity storage batteries for auxiliary power

Challenging spirit
develop new businesses ahead of time

Founder of Yuasa Storage Battery Co., Ltd.
Shichizaemon Yuasa

YUASA (Yuasa Corporation)

Contributing to the development of the automotive industry

1910s
Manufacture of automotive lead-acid batteries

2004 Corporate Merger

Ushering in a new EV era

2000s
Supply of lithium-ion batteries for the i-MiEV, the world's first mass-produced EV

Mitsubishi Motors "Eclipse Cross PHEV"

2010s
Supply of lithium-ion batteries for PHEVs to Mitsubishi Motors Corporation

Honda "FIT HYBRID"

Contributing to electrification of Japanese automakers

2010s
Supply of lithium-ion batteries for HEVs to Honda Motor Co.,Ltd.

TOYOTA "Harrier"

2020s
Supply of lithium-ion batteries for HEVs to Toyota Motor Corporation

Contributing to the promotion of clean energy

2000s
Development of renewable energy storage systems

Contributing to the realization of decarbonized society

2020s
Delivery of a world-class storage battery facility for wind power generation

For the next 100 years

Support safety from deep sea to outer space under harsh conditions

Supporting the development of aircrafts

2000s
Receiving orders of lithium-ion battery system for Boeing 787 in the U.S.

2010s
Installation of lithium-ion batteries on the International Space Station

2010s
Mass production of Japan's first lithium-ion batteries for submarines

© 2023 by GS Yuasa Lithium Power Inc. NASA Battery Workshop 2023

GS Yuasa Aerospace and Specialty Battery Groups

GS Yuasa Technology Ltd. "GYT"

- Research, development, manufacturing, test, and sales of specialty cells and batteries for:
  - Aerospace
  - Undersea
  - Defense and Security
- ISO9001 & JISQ9100 certified
- Headquarters located in Kyoto, Japan

GS Yuasa Lithium Power, Inc. "GYLP"

- Primary channel for GS Yuasa Li-ion energy storage technologies and solutions for North American aerospace and defense applications.
- Engineering, sales, service, manufacturing, program management, logistics and export compliance
- ISO9001 & AS9100 certified
- Incorporated in the state of Georgia, US Company

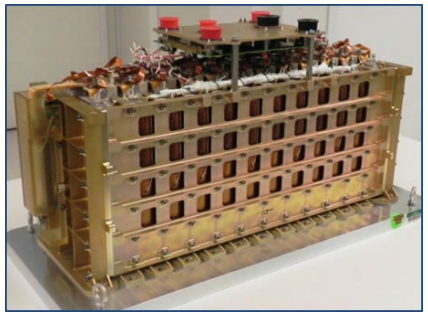

防衛省 MINISTRY OF DEFENSE

DEPARTMENT OF DEFENSE · UNITED STATES OF AMERICA

RECIPROCAL DEFENSE PROCUREMENT MOU

June 2016, extended through June 2031

© 2023 by GS Yuasa Lithium Power Inc. NASA Battery Workshop 2023

LSE Cell Heritage and Program Experience

© 2023 by GS Yuasa Lithium Power Inc. NASA Battery Workshop 2023

Timeline of GS Yuasa Space Chemistry

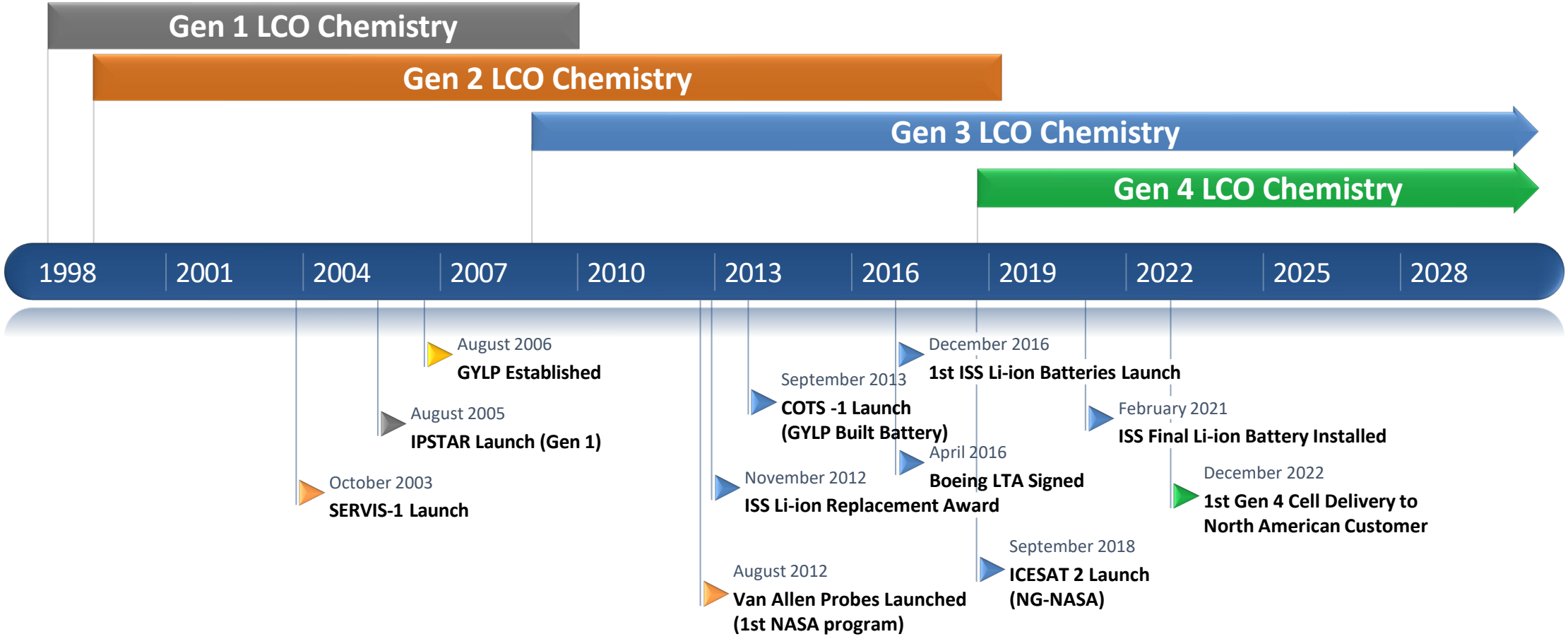

Since inception in 1998, GS Yuasa has demonstrated the ability to maintain configuration and control over material sources for 15+ years thanks to strong relationship with the suppliers.

© 2023 by GS Yuasa Lithium Power Inc. NASA Battery Workshop 2023

Evolution of GS Yuasa $LiCoO_2$, 100% DOD

100Ah Class Cell, Energy Type

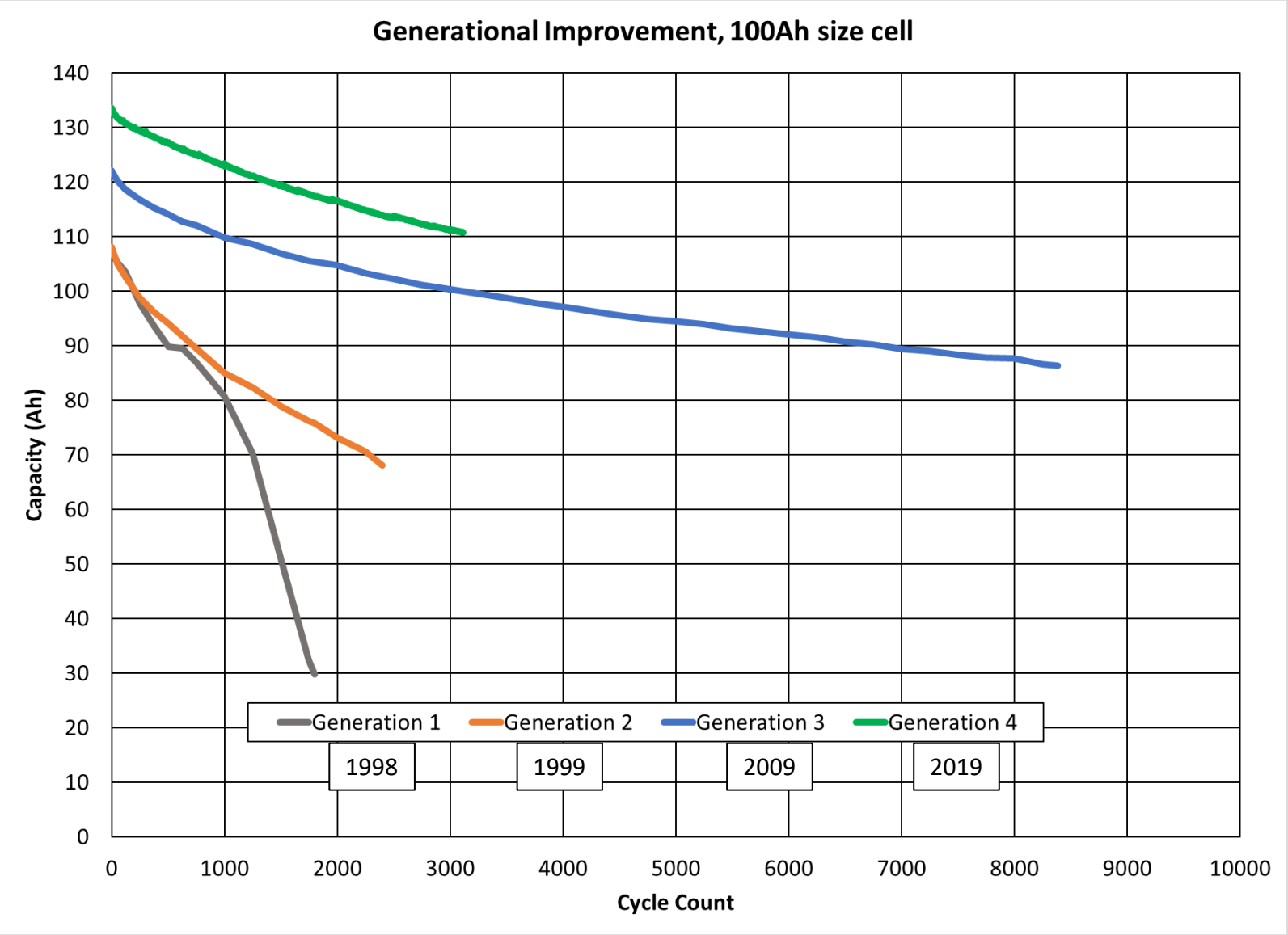

	Cell	Nominal BOL Ah Capacity	EoCV	BOL Wh/Kg
Gen1	LSE100	107	3.98	141
Gen2	LSE100	109	3.98	144
Gen3	LSE110	122	4.1	165
Gen4	LSE122	132	4.1	175

Width	Thick	Height*
130	50	208

© 2023 by GS Yuasa Lithium Power Inc. NASA Battery Workshop 2023

GS Yuasa Space Flight Heritage Update

GS Yuasa is a world leader in Li-ion energy storage for space vehicles

Number of satellites……	245+
– LEO/MEO……..	112+
– GEO……	132
– Interplanetary……	1+
1st satellite on-orbit…….….	Servis 1 (30 Oct. 2003)
Longest satellite on-orbit (yrs)….....	>18yr (IPSTAR, 11 Aug. 2005) still operational
Li-ion Watt-hours flown in space….....	>4.96 MWh (world leader)
Cell-hours flown in space……..	>619 million hours
Space cell qualification programs…….	>27
Cell sizes (Ah) flown….....	35; 50; 55; 100; 102; 110; 134; 145; 175; 190; 200
Performance to date…….....	No failures
Backlog (Wh)…….……	>1.04 MWh

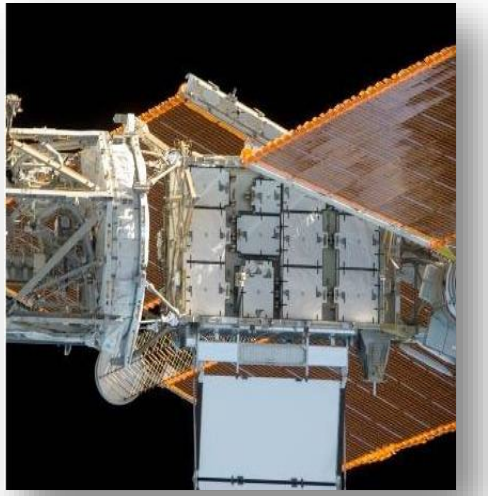

Launch vehicles & number of satellites

Ariane-5ECA	51	Soyuz-STB Fregat-MT	17	Epsilon	6
Falcon 9	28	Antares 120, 230, 230+	15	Zenit-3	5
H-2A-20x	28	H-2B-304	13	Others	10
Proton-M Briz-M	29	Atlas 5 (401)	7		
Soyuz	27	Atlas 5 (421,431,551)	6		

Metrics updated November 2023

© 2023 by GS Yuasa Lithium Power Inc. NASA Battery Workshop 2023

LSE Cell Basic Shape

Over 25 years of outstanding performance

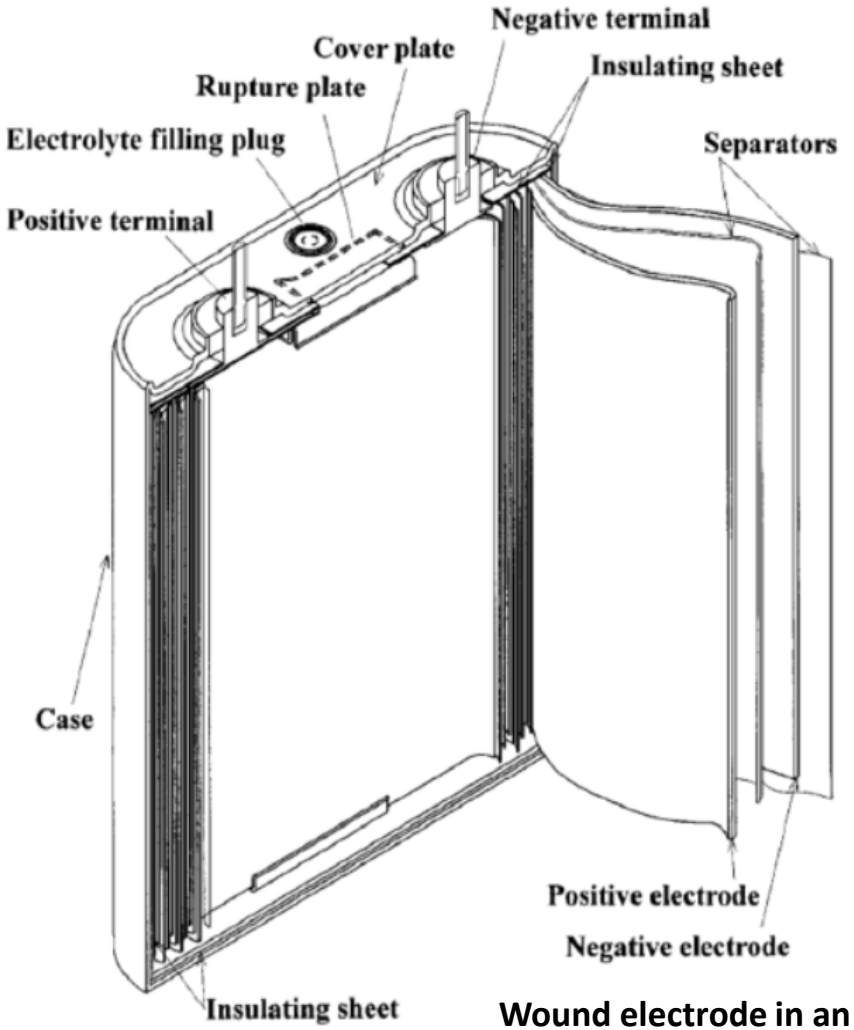

Wound electrode in an elliptical cylindrical case

The LSE cell portfolio consists of various sizes of Li-ion cells. All cells share the same primary features: Al-case, wound-prismatic construction, ceramic terminals, LCO chemistry. All are manufactured in Kyoto, Japan on the same equipment and using the same basic processes. The portfolio can be viewed as a single fundamental cell technology, configurable in height, width and thickness.

© 2023 by GS Yuasa Lithium Power Inc. NASA Battery Workshop 2023

LSE Cell Configurations & Qualification Status

- Configuration Qualified
- Configuration Qualified, QT data property of US Government
- Qualification by Similarity
- Engineering model cells on test
- Qualification Pending

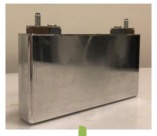

	Chemistry				Dimensions		
	Gen 3		Gen 4		Width	Thick	Height*
	Energy	Power	Energy	Power			
Cell Configuration				LSE12x	133	21	68.2
	LSE42	LSE38	*TBD*	*TBD*	98	37	151
	LSE55	LSE51	LSE60	LSE56	130	50	123
	LSE110	LSE102	LSE122	LSE112	130	50	208
	LSE145	LSE134	LSE160	LSE147	130	50	263
	LSE190	--	LSE205	*TBD*	165	50	263

*not including terminal posts

© 2023 by GS Yuasa Lithium Power Inc. NASA Battery Workshop 2023

LSE12x Lithium-ion Cell for Space
“Small” format cell

© 2023 by GS Yuasa Lithium Power Inc. NASA Battery Workshop 2023

LSE12x Design Objectives

Goal: Design and qualify a cost competitive small form factor cell that aligns with the market's expansion toward smaller and high power spacecraft.

Cell should achieve the following objectives:

→Continue LSE cell reputation for ultra high reliability

- Leverage heritage mechanical piece parts and processes to reduce risk
- GS Yuasa's Generation 4 LCO-Graphite Space chemistry

→Minimize user's program risk through complete configuration control and material traceability

→Design for manufacturability and cost competitiveness

© 2023 by GS Yuasa Lithium Power Inc. NASA Battery Workshop 2023

LSE12x Case Design

Fusion of Aviation and Automotive Cells

Blue Energy

- EH5 Ultra high power cell for Honda/Acura hybrids

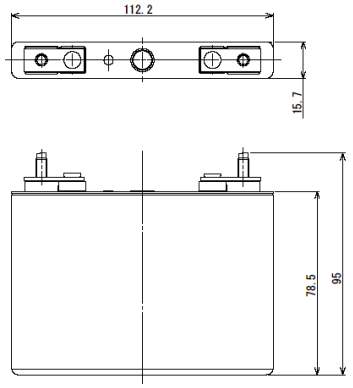

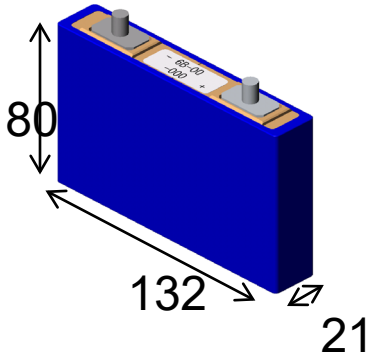

- LVP10 Cell for Aviation Applications

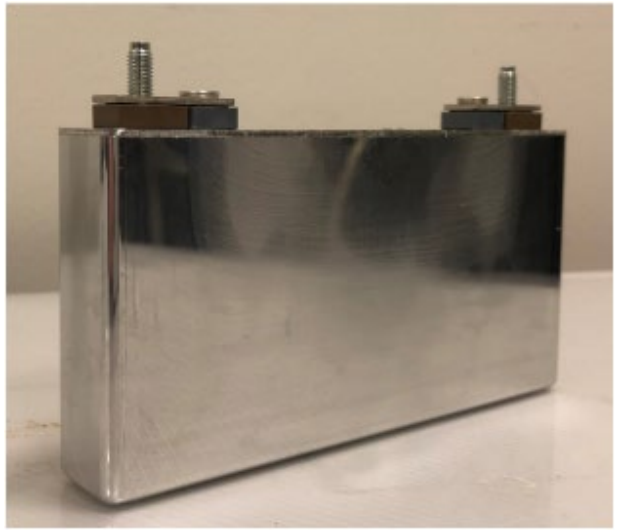

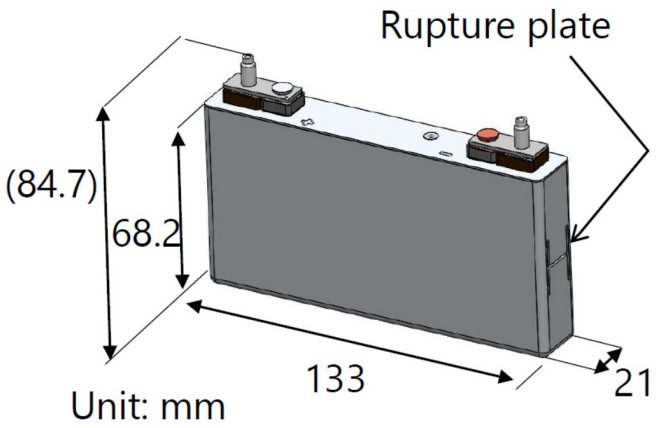

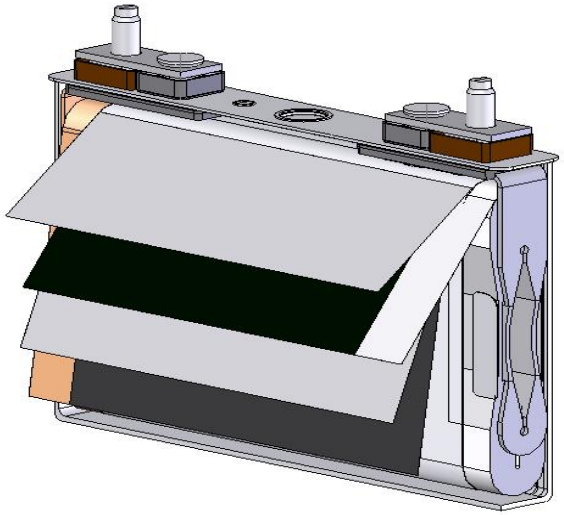

- Wound Element
- Aluminum Case
- Case Neutral Design
- Hermetically Sealed
- Ruggedized Current Collectors

株式会社 ジーエス・ユアサ テクノロジー
GS Yuasa Technology Ltd.

© 2023 by GS Yuasa Lithium Power Inc. NASA Battery Workshop 2023

LSE12x Cell Design

Features and Specifications Summary

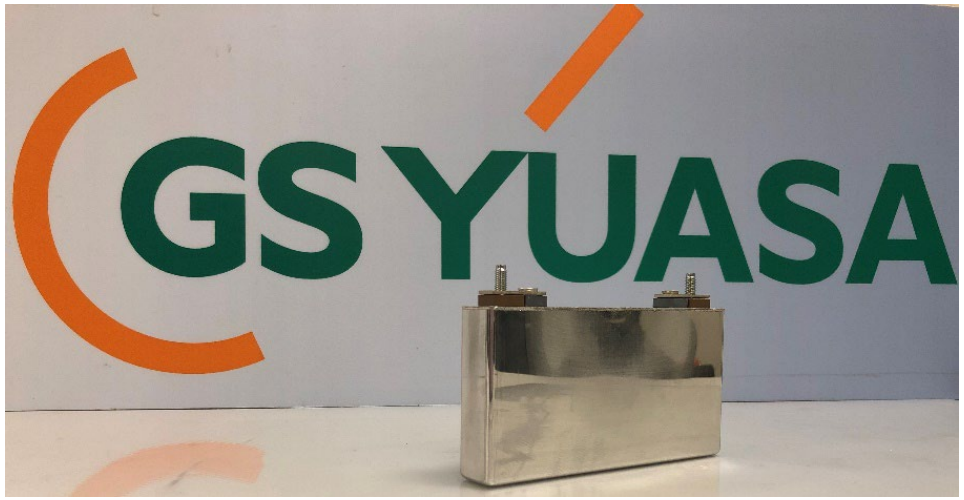

- Inspired by mature commercial cell designs; Enhanced for space
  - Case neutral design
  - Radiation hardened
  - Hermetically sealed
- GS Yuasa's Generation IV Lithium Cobalt Dioxide Chemistry
  - Extremely low DCR
  - Excellent cycle & calendar life
  - High discharge voltage
    - ✓ Ideal for unregulated bus applications
- Suitable for all space vehicles

LSE12X Performance Specification

BOL Capacity	4.1V-2.75V	13.6 Ah, 51.0Wh
	*4.2V-2.75V	15.0 Ah, 56.3Wh
Nameplate Capacity		12 Ah, 45Wh
Nominal Discharge Voltage		3.75 V
Continuous Charge Rate, 15°C		6A
Continuous Discharge Rate		24A
Pulse Discharge Rate		60+A
DCR @ 50% SOC, 15°C		<6 mΩ
Nominal Cell Impedance		1.1mΩ
Mass		0.390 kg

GS Yuasa validated Life and Performance model capability to allow for "right sizing" of a battery solution.

© 2023 by GS Yuasa Lithium Power Inc. NASA Battery Workshop 2023

LSE12x Qualification

Aerospace Space Power Workshop 2022

Cell completed qualification in December 2021. Results presented at Space Power Workshop 2022: https://gsyuasa-lp.com/news/gylp-presents-at-the-2022-aerospace-space-power-workshop/

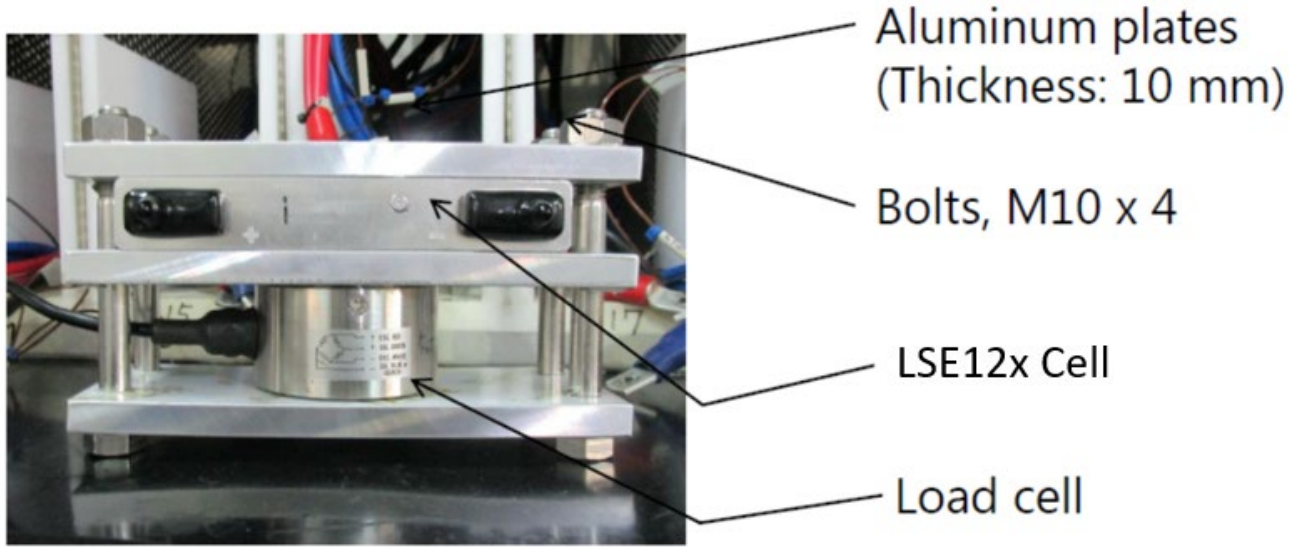

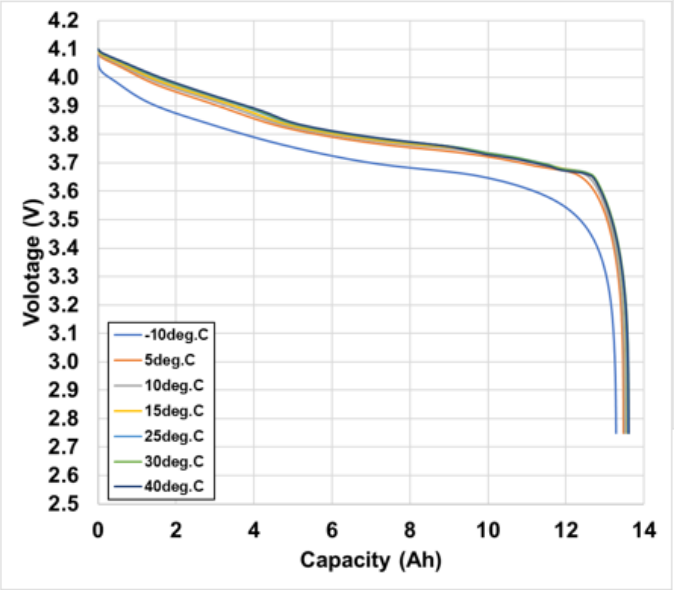

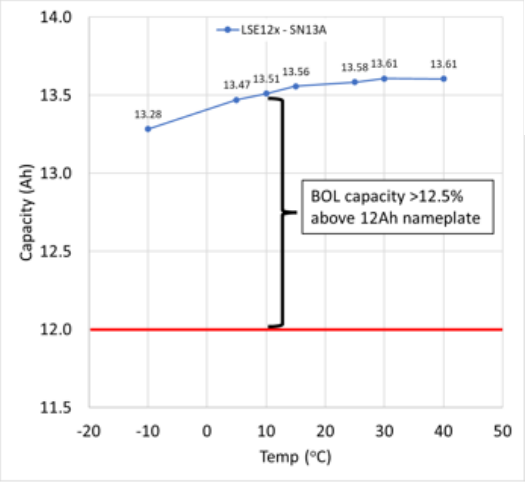

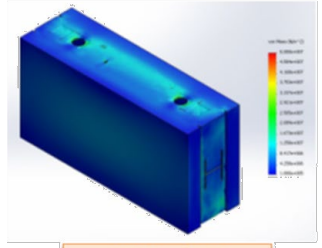
EOL Mechanical FEA

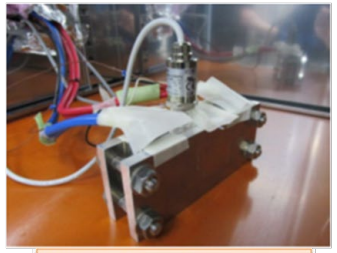
Cycle Internal Pressure Change Evaluation

Case Bust Test

Nail Pen Testing with adj. Cells
(P20L-9567-2B)

© 2023 by GS Yuasa Lithium Power Inc. NASA Battery Workshop 2023

LSE12x Generation 4 LCO-Graphite Chemistry

High DOD LEO Cycling Life Test

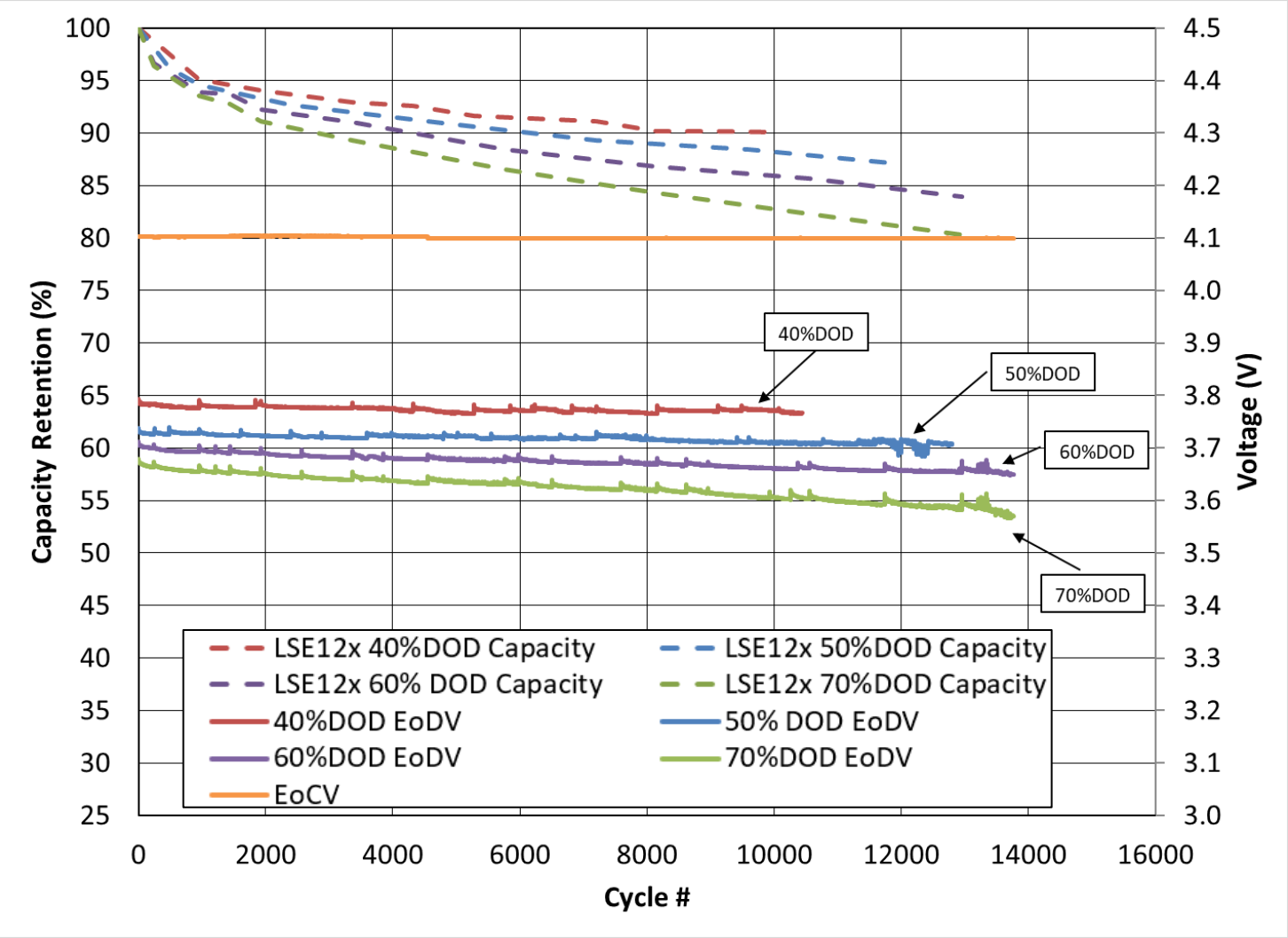

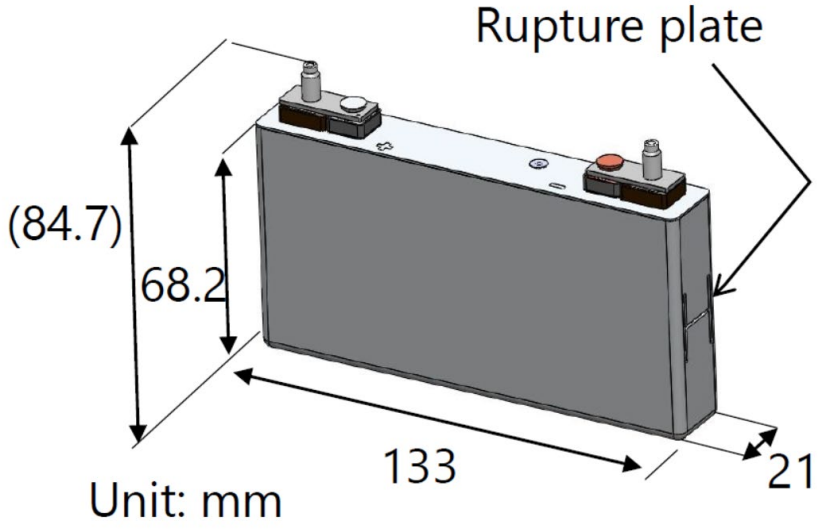

Cycle	Discharge	Charge
40%DOD	0.8C (9.6A) for 0.5hr	0.5C, 4.10V, CC/CV, 1hr
50%DOD	1.0C (12.0A) for 0.5hr	0.6C, 4.10V, CC/CV, 1hr
60%DOD	1.2C (14.4A) for 0.5hr	0.7C, 4.10V, CC/CV, 1hr
70%DOD	1.4C (16.8A) for 0.5hr	0.8C, 4.10V, CC/CV, 1hr

See GS Yuasa's SPW2023 Presentation for more Gen 4 Cycle Life Performance : https://gsyuasa-lp.com/news/gs-yuasa-lithium-power-presents-at-the-2023-aerospace-space-power-workshop/

© 2023 by GS Yuasa Lithium Power Inc. NASA Battery Workshop 2023

LSE12x Generation 4 LCO-Graphite Chemistry

Life and Performance Model

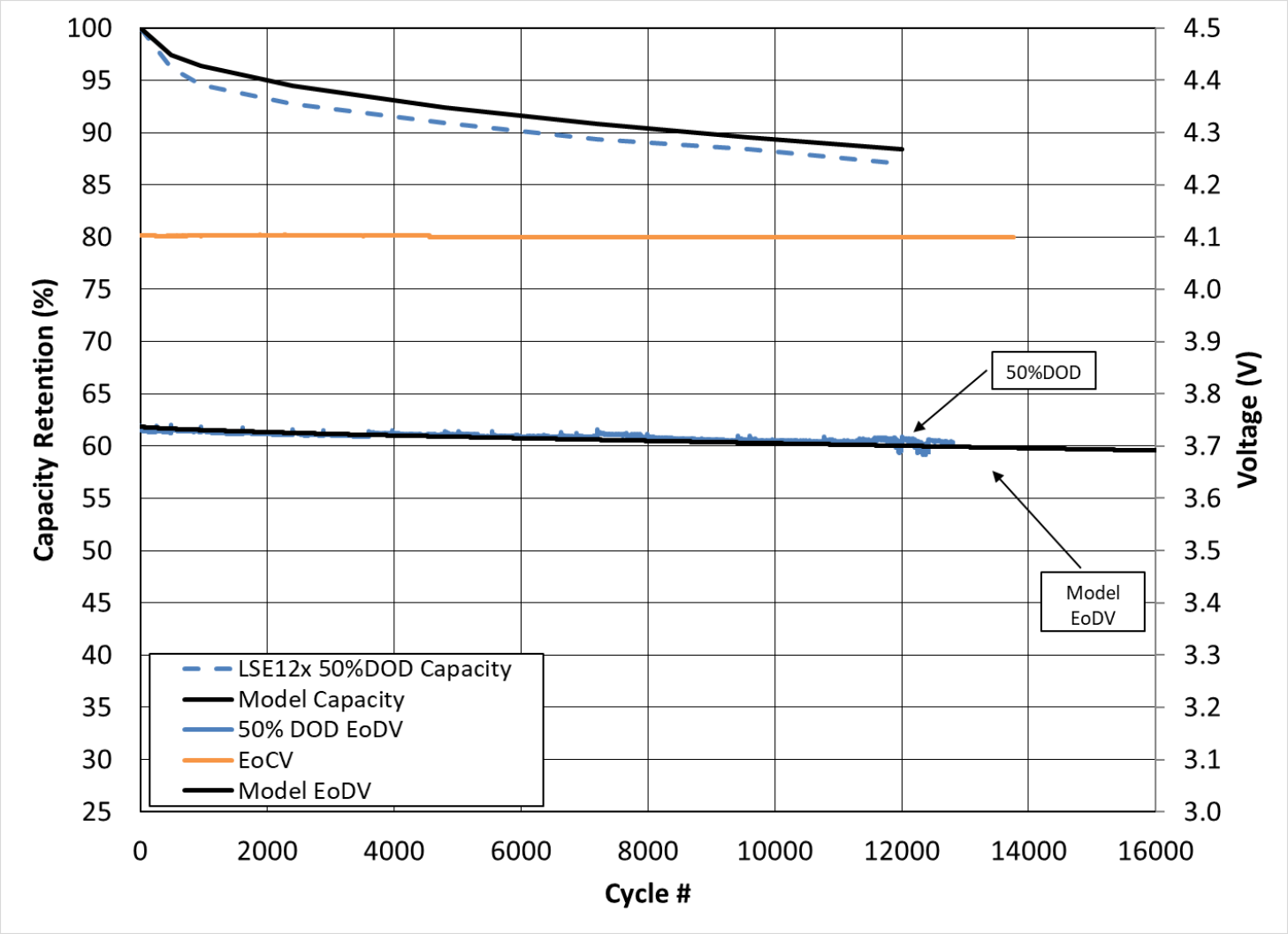

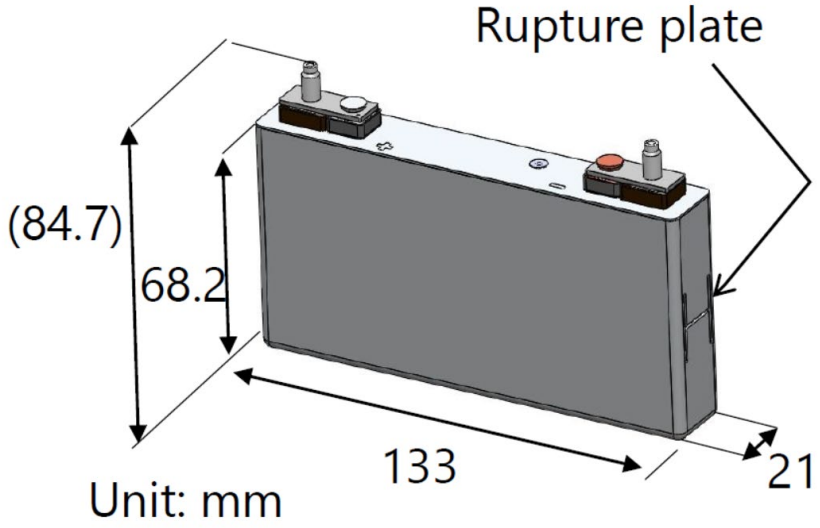

Cycle	Discharge	Charge
40%DOD	0.8C (9.6A) for 0.5hr	0.5C, 4.10V, CC/CV, 1hr
50%DOD	1.0C (12.0A) for 0.5hr	0.6C, 4.10V, CC/CV, 1hr
60%DOD	1.2C (14.4A) for 0.5hr	0.7C, 4.10V, CC/CV, 1hr
70%DOD	1.4C (16.8A) for 0.5hr	0.8C, 4.10V, CC/CV, 1hr

See GS Yuasa's SPW2023 Presentation for more Gen 4 Cycle Life Performance : https://gsyuasa-lp.com/news/gs-yuasa-lithium-power-presents-at-the-2023-aerospace-space-power-workshop/

© 2023 by GS Yuasa Lithium Power Inc. NASA Battery Workshop 2023

LSE12x Generation 4 LCO-Graphite Chemistry

Life and Performance Model

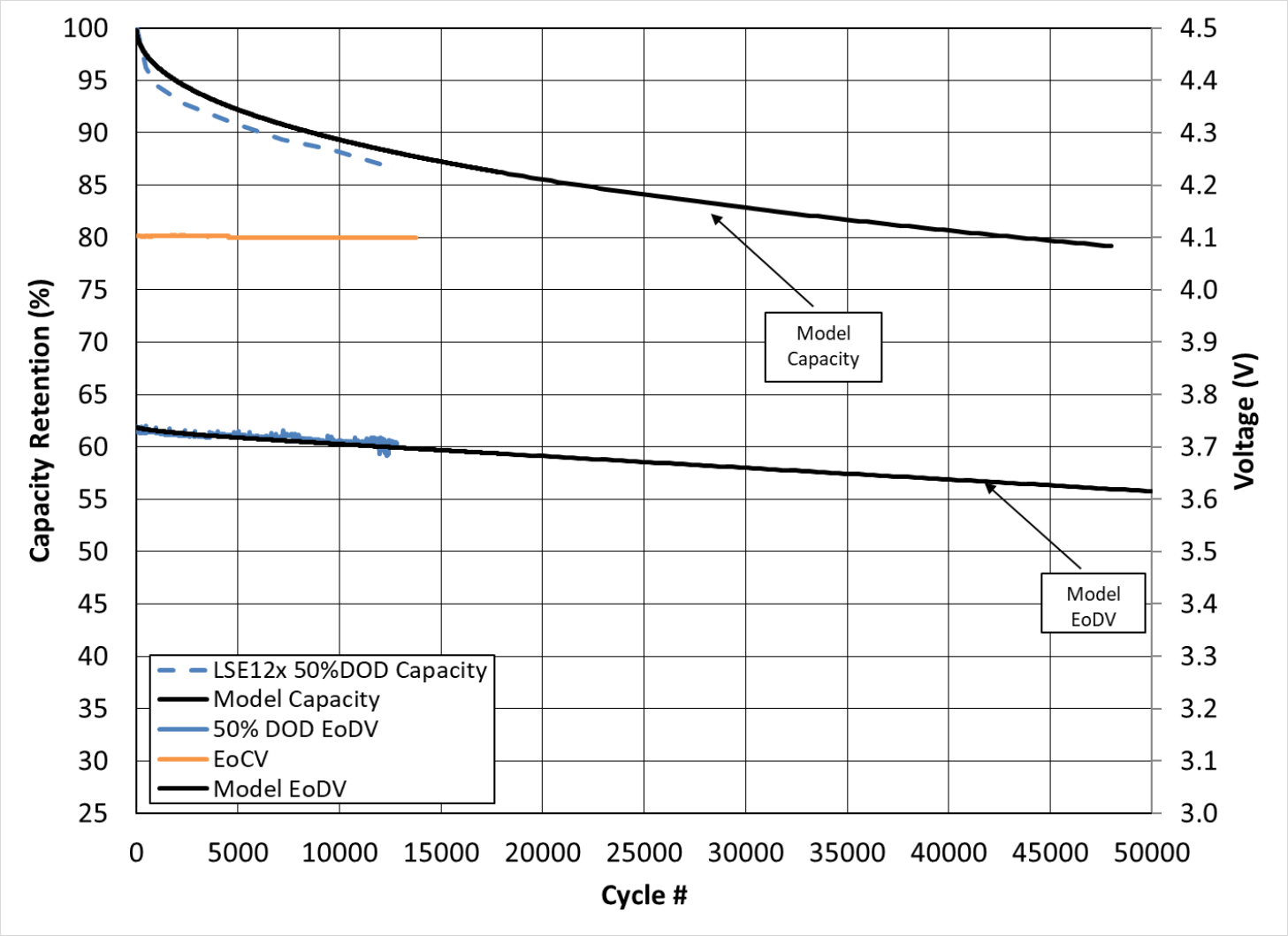

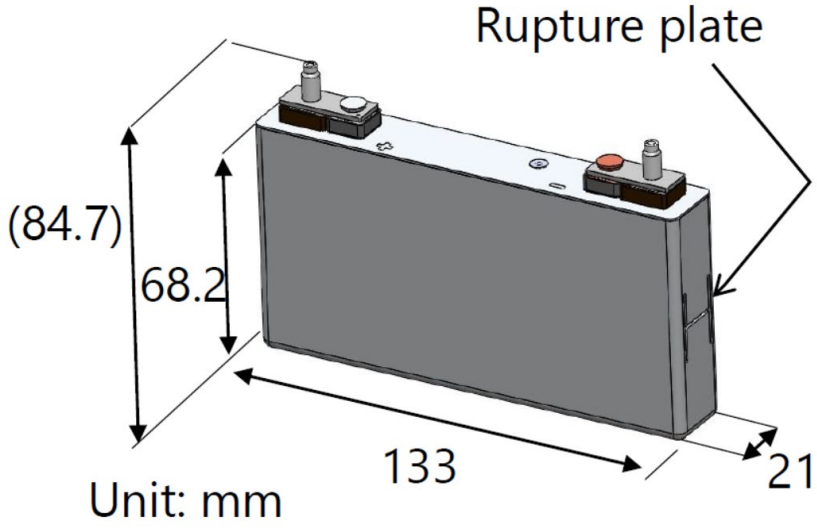

Cycle	Discharge	Charge
40%DOD	0.8C (9.6A) for 0.5hr	0.5C, 4.10V, CC/CV, 1hr
50%DOD	1.0C (12.0A) for 0.5hr	0.6C, 4.10V, CC/CV, 1hr
60%DOD	1.2C (14.4A) for 0.5hr	0.7C, 4.10V, CC/CV, 1hr
70%DOD	1.4C (16.8A) for 0.5hr	0.8C, 4.10V, CC/CV, 1hr

See GS Yuasa's SPW2023 Presentation for more Gen 4 Cycle Life Performance : https://gsyuasa-lp.com/news/gs-yuasa-lithium-power-presents-at-the-2023-aerospace-space-power-workshop/

© 2023 by GS Yuasa Lithium Power Inc. NASA Battery Workshop 2023

LSE12x Lithium-ion Cell for Space
Performance Compared to COTS 18650 cells

© 2023 by GS Yuasa Lithium Power Inc. NASA Battery Workshop 2023

LSE12x Compared to GS Yuasa Large Format Cells

40% DOD LEO Cycle Life

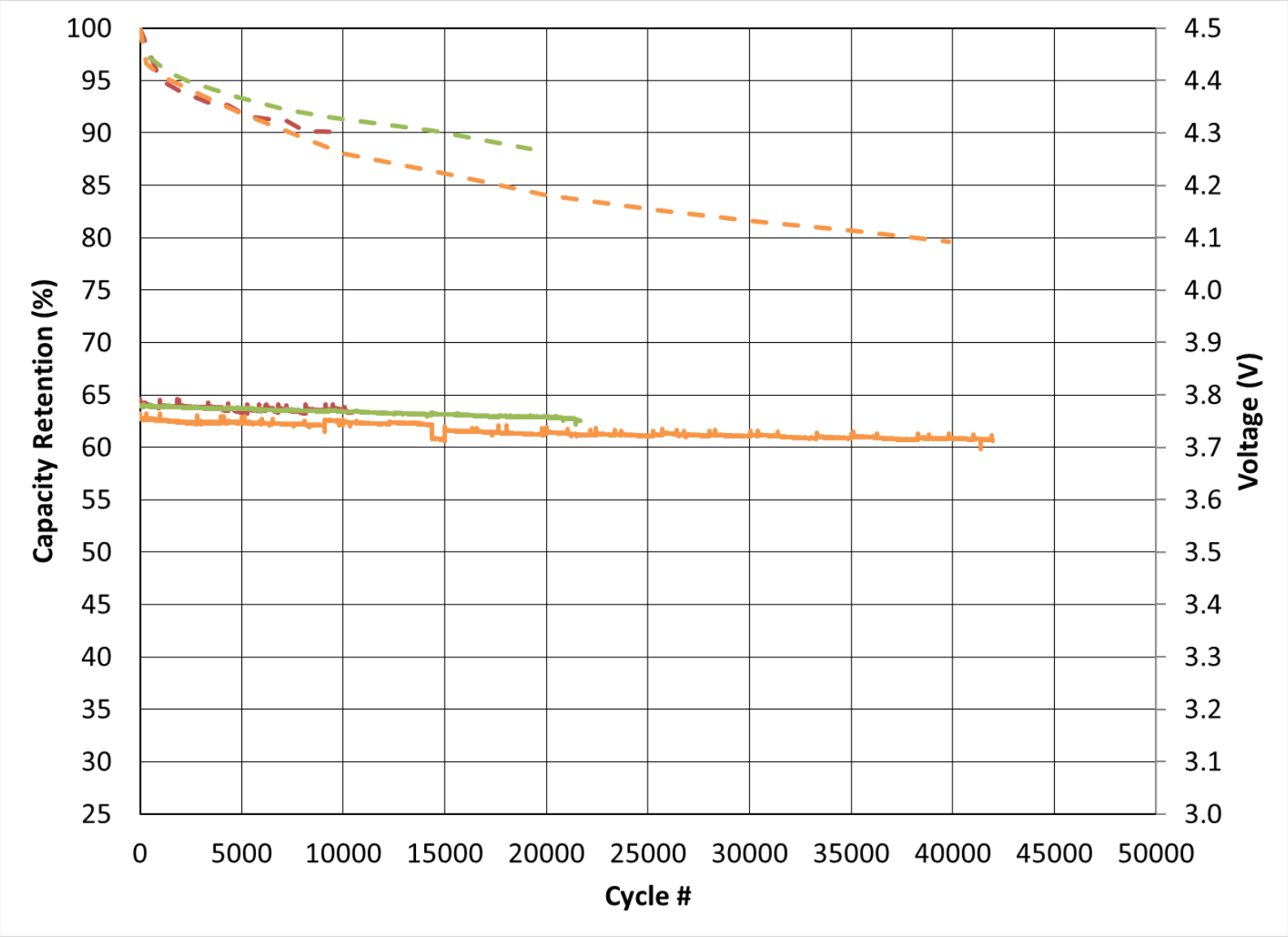

GS Yuasa
LSE12x

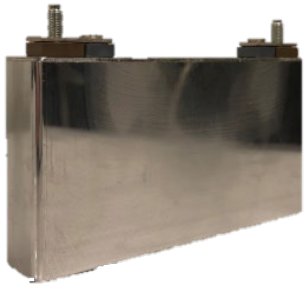

(Not to scale)

LSE134 & LSE112

- - LSE12x 40%DOD Capacity
- - LSE112 (Large Format Gen 4 LSE Cell)
- - LSE134 (Gen 3 Ref)
— LSE12x EoDV
— LSE112 EODV (Large Format Gen 4 LSE Cell)
— LSE134 EoDV (Gen 3 ref)

© 2023 by GS Yuasa Lithium Power Inc. NASA Battery Workshop 2023

LSE12x Compared to COTS 18650

40% DOD LEO Cycle Life

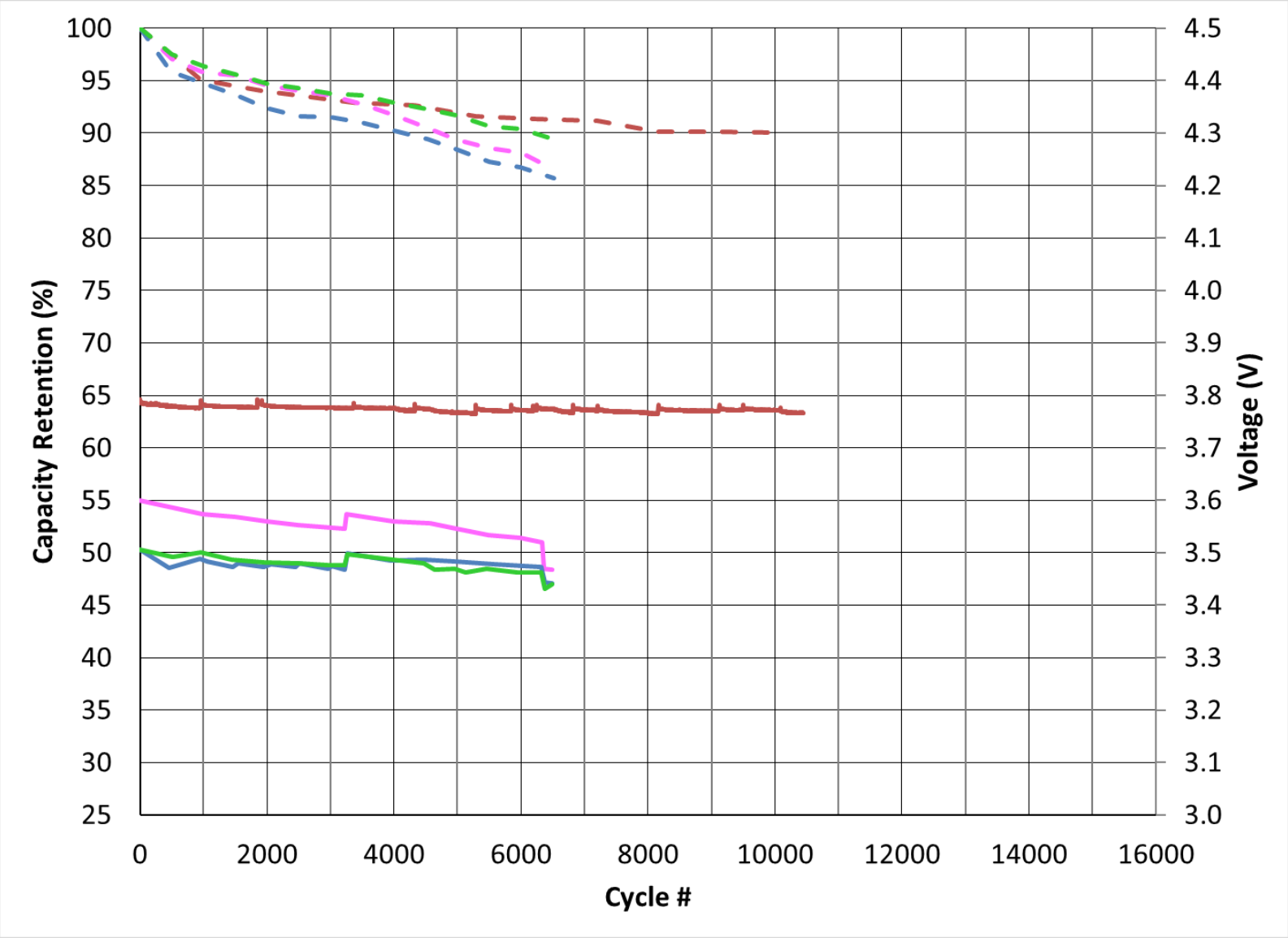

GS Yuasa LSE12x | LG M36 | LG MJ1 | Samsung Q30

(Not to scale)

- LSE12x 40%DOD Capacity (4.1V EoCV)
- Samsung Q30 (4.1V EoCV)
- LG M36 Capacity (4.1V EoCV)
- LG MJ1 Capacity (4.1V EoCV)
- LSE12x EoDV
- Samsung Q30 EoDV
- LG MJ36 EoDV
- LG MJ1 EoDV

COTS 18650 data reference:
F. C. Krause et al 2021 J. Electrochem. Soc. 168 040504

© 2023 by GS Yuasa Lithium Power Inc. NASA Battery Workshop 2023

LSE12x Generation 4 LCO-Graphite Chemistry

Voltage Performance vs. LG and Moli 18650 Cells

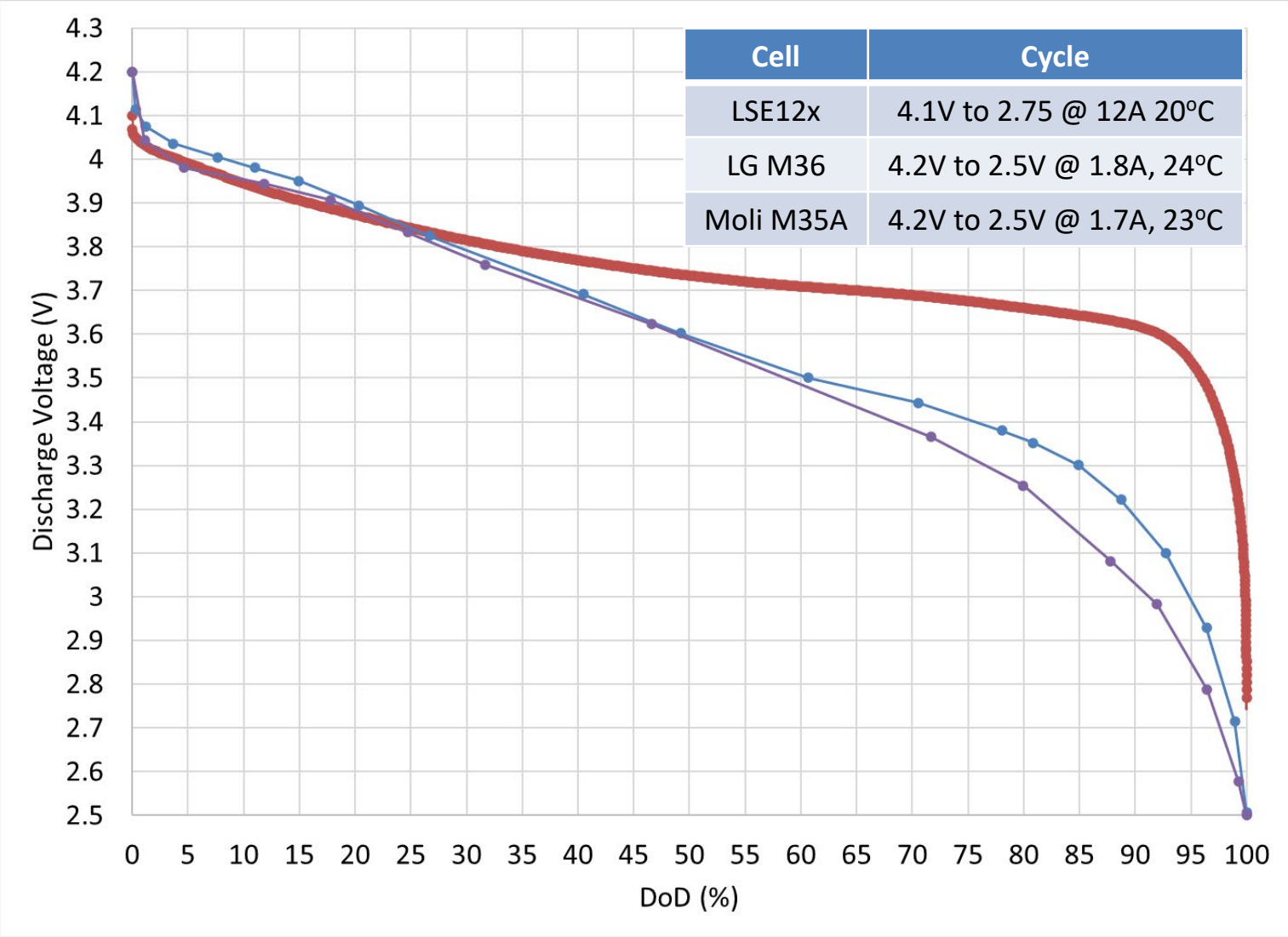

Cell	Cycle
LSE12x	4.1V to 2.75 @ 12A 20°C
LG M36	4.2V to 2.5V @ 1.8A, 24°C
Moli M35A	4.2V to 2.5V @ 1.7A, 23°C

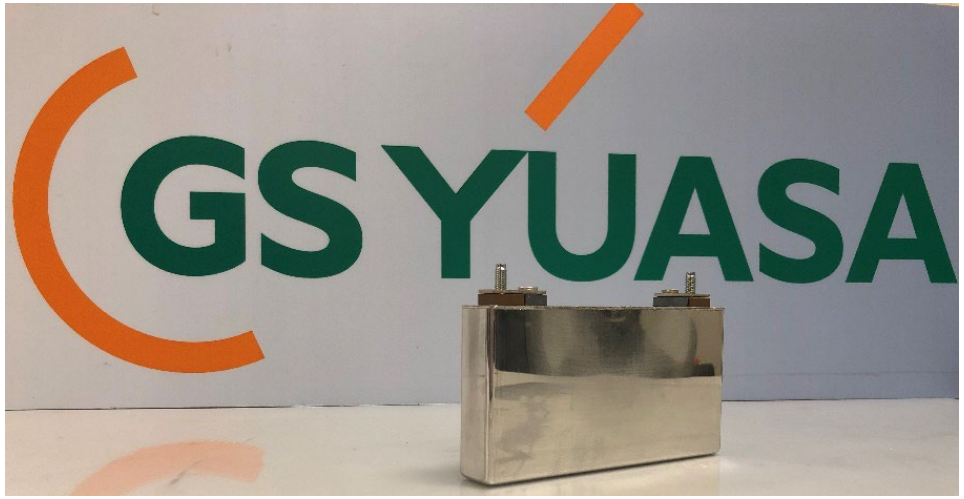

LG M36

Moli M35A

LSE12x discharging at 1.0C rate has superior voltage performance compared to COTS cells discharging at 0.5C rate

© 2023 by GS Yuasa Lithium Power Inc. NASA Battery Workshop 2023

LSE12x Generation 4 LCO-Graphite Chemistry

Voltage Performance vs. LG and Moli 18650 Cells

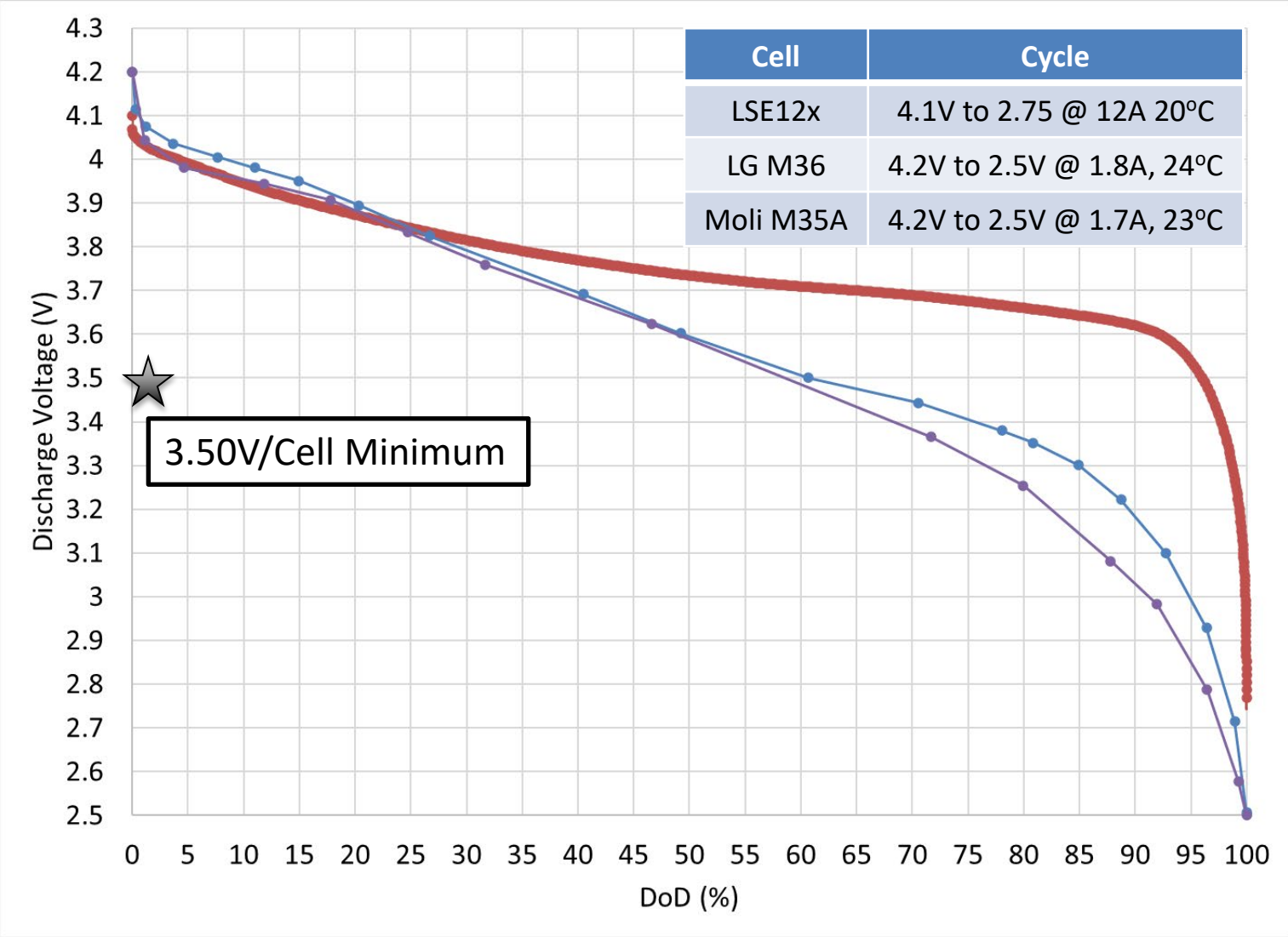

Cell	Cycle
LSE12x	4.1V to 2.75 @ 12A 20°C
LG M36	4.2V to 2.5V @ 1.8A, 24°C
Moli M35A	4.2V to 2.5V @ 1.7A, 23°C

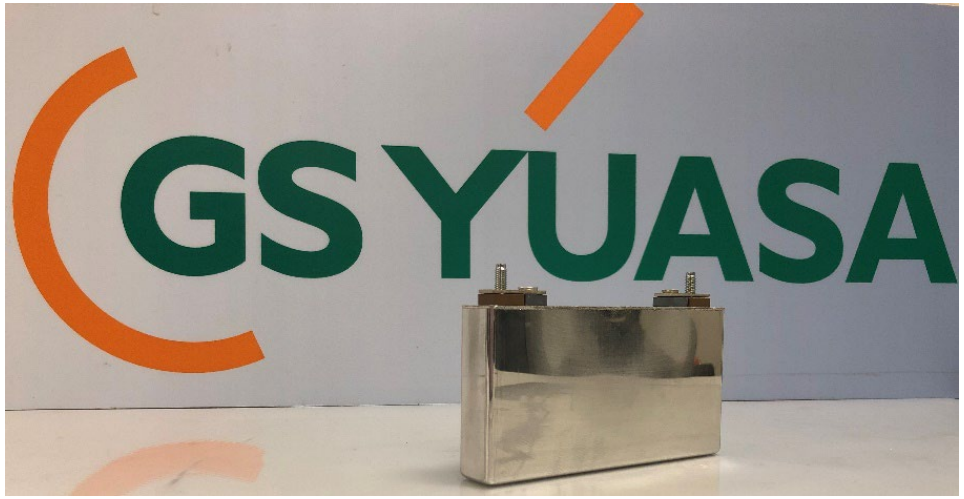

LG M36

Moli M35A

In the case of an unregulated bus architecture, a critical voltage lower bound is present, e.g. 3.50V/cell

© 2023 by GS Yuasa Lithium Power Inc. NASA Battery Workshop 2023

LSE12x Generation 4 LCO-Graphite Chemistry

Voltage Performance vs. LG and Moli 18650 Cells

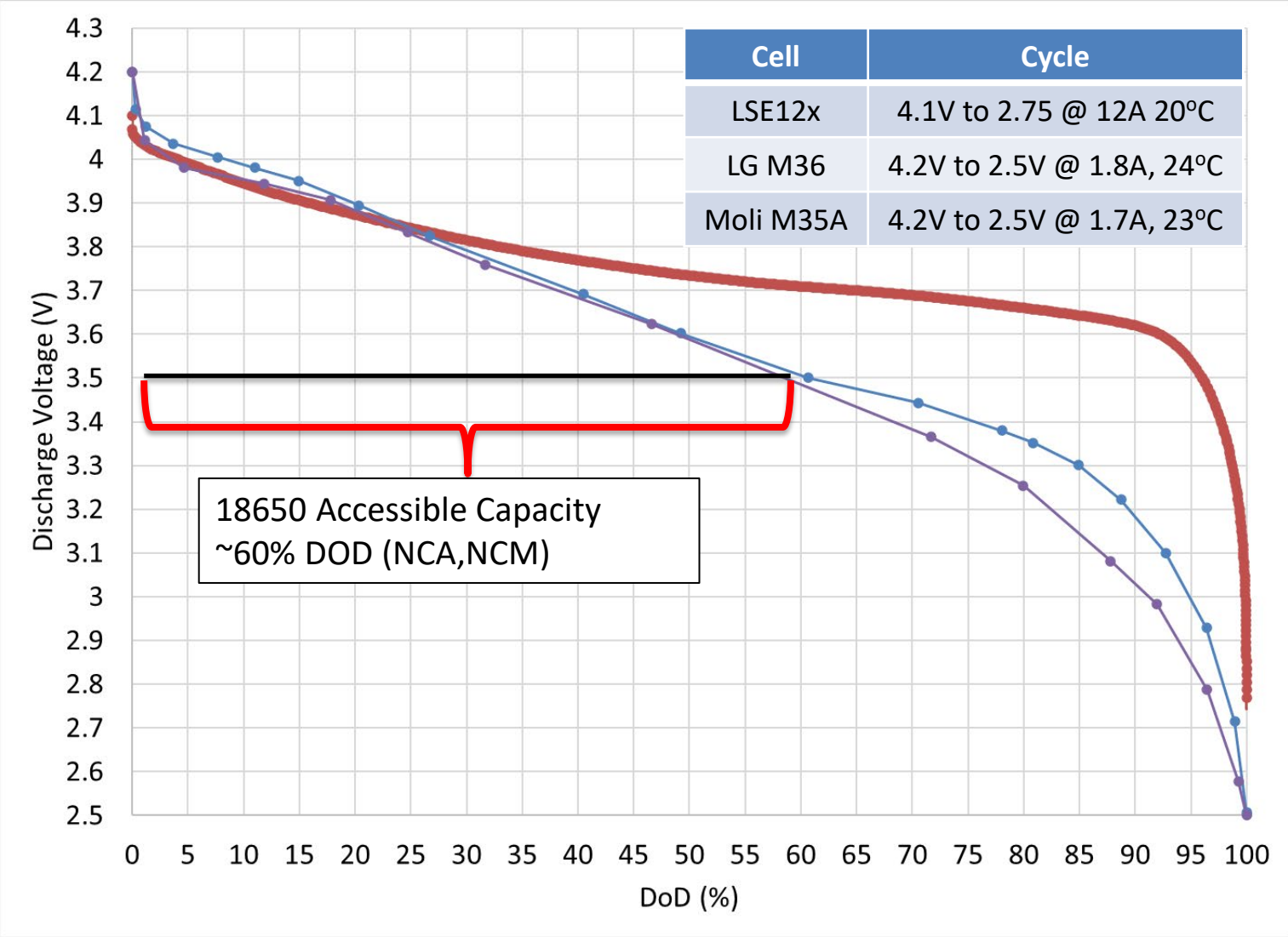

Cell	Cycle
LSE12x	4.1V to 2.75 @ 12A 20ºC
LG M36	4.2V to 2.5V @ 1.8A, 24ºC
Moli M35A	4.2V to 2.5V @ 1.7A, 23ºC

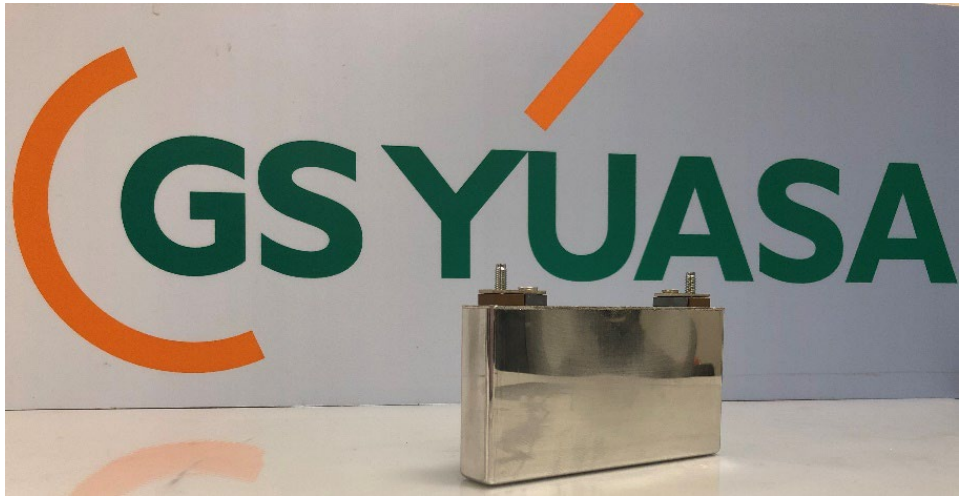

LG M36

Moli M35A

COTS 18650 cells can access only 60% of available capacity at 0.5C discharge rate. 3.45Ah cell is ~2.07Ah effectively (BOL)

© 2023 by GS Yuasa Lithium Power Inc. NASA Battery Workshop 2023

LSE12x Generation 4 LCO-Graphite Chemistry

Voltage Performance vs. LG and Moli 18650 Cells

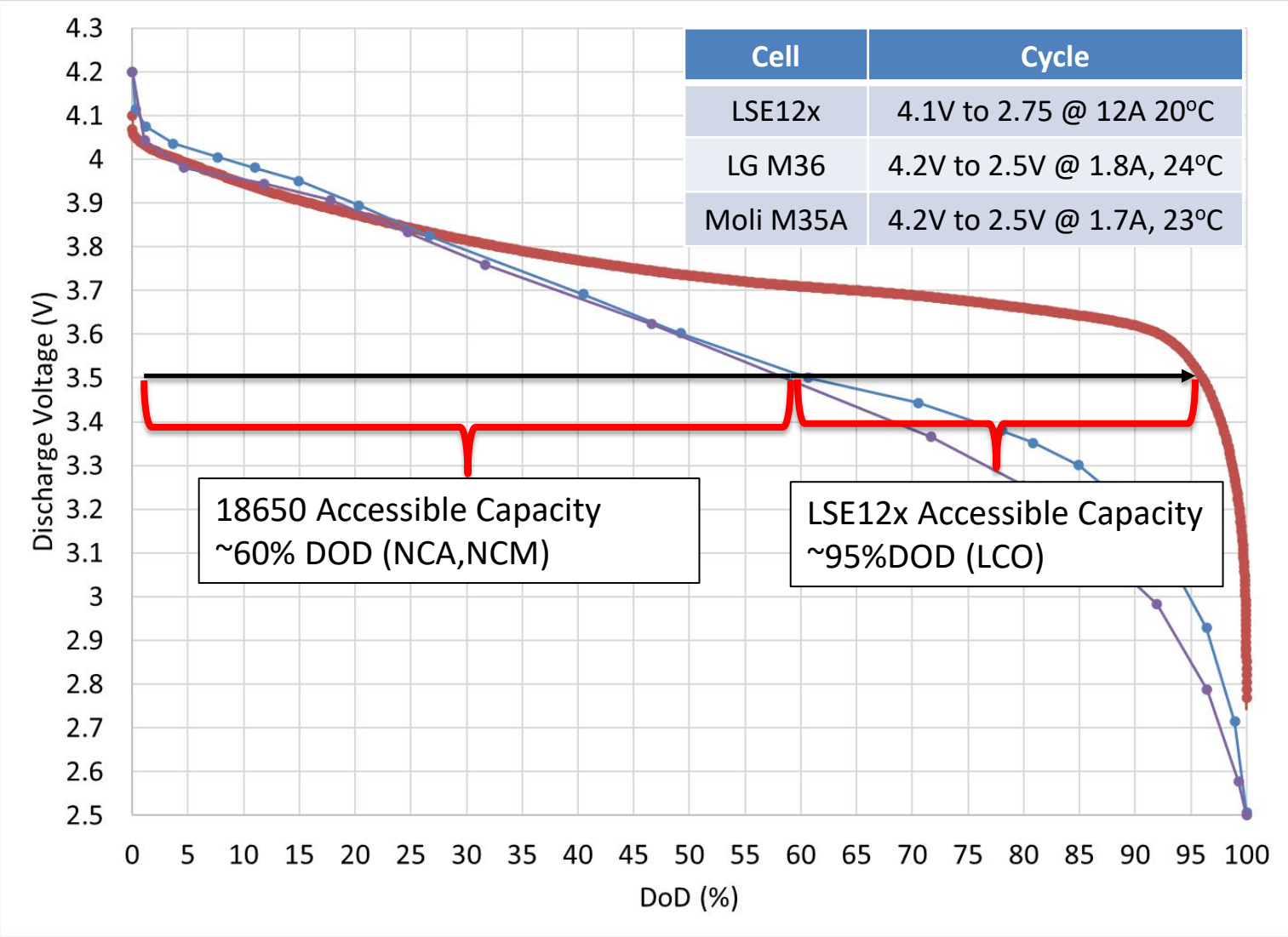

Cell	Cycle
LSE12x	4.1V to 2.75 @ 12A 20°C
LG M36	4.2V to 2.5V @ 1.8A, 24°C
Moli M35A	4.2V to 2.5V @ 1.7A, 23°C

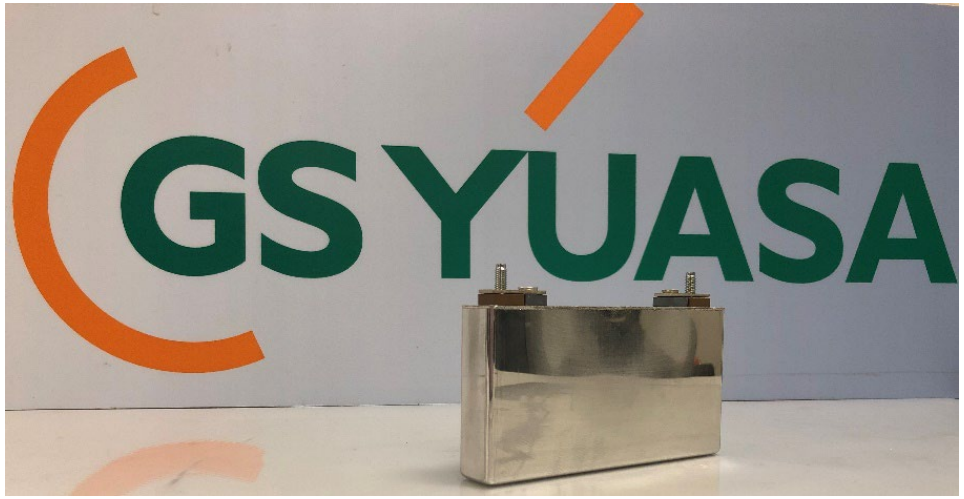

LG M36 | Moli M35A

LSE12x Gen 4 cell has access to ~95% of available capacity at a 1C discharge rate. 13.54Ah cell can access 12.86 Ah (BOL)

© 2023 by GS Yuasa Lithium Power Inc. NASA Battery Workshop 2023

GS Yuasa Lithium Power
MA12x Modular Battery

© 2023 by GS Yuasa Lithium Power Inc. NASA Battery Workshop 2023

Challenge and Design Approach

- **Challenge:**
  → Design a modular battery capable of being combined and / or stacked to meet customer voltage and capacity needs for use in the space industry.

- **Design Approach:**
  → Develop a low impedance, 12-14 Ahr, Li-Ion Cell utilizing GYT space cell expertise and high reliability manufacturing.
    - *Complete: LSE12x developed, qualified, and available to the market*

  → Utilize this smaller cell in an 8S (series combination) to generate the voltage commonly used in space applications (24V - 33V).

  → Develop a mechanical structural strategy to accommodate various number of 8S units connected in parallel to provide the overall capacity required by the customer.
    - 8SnP Capacity = 12Ahr*n units in parallel

© 2023 by GS Yuasa Lithium Power Inc. NASA Battery Workshop 2023

Modular Structure Strategy

- Modular concepts were developed using this design approach and several options were captured that could be qualified depending on customer needs.
- GYLP has decided to build and qualify an 9P8S configuration for the qualification unit since it has one of the larger bottom assemblies and is a two stack module.

8SnP LSE12x Physical Configurations, Top View

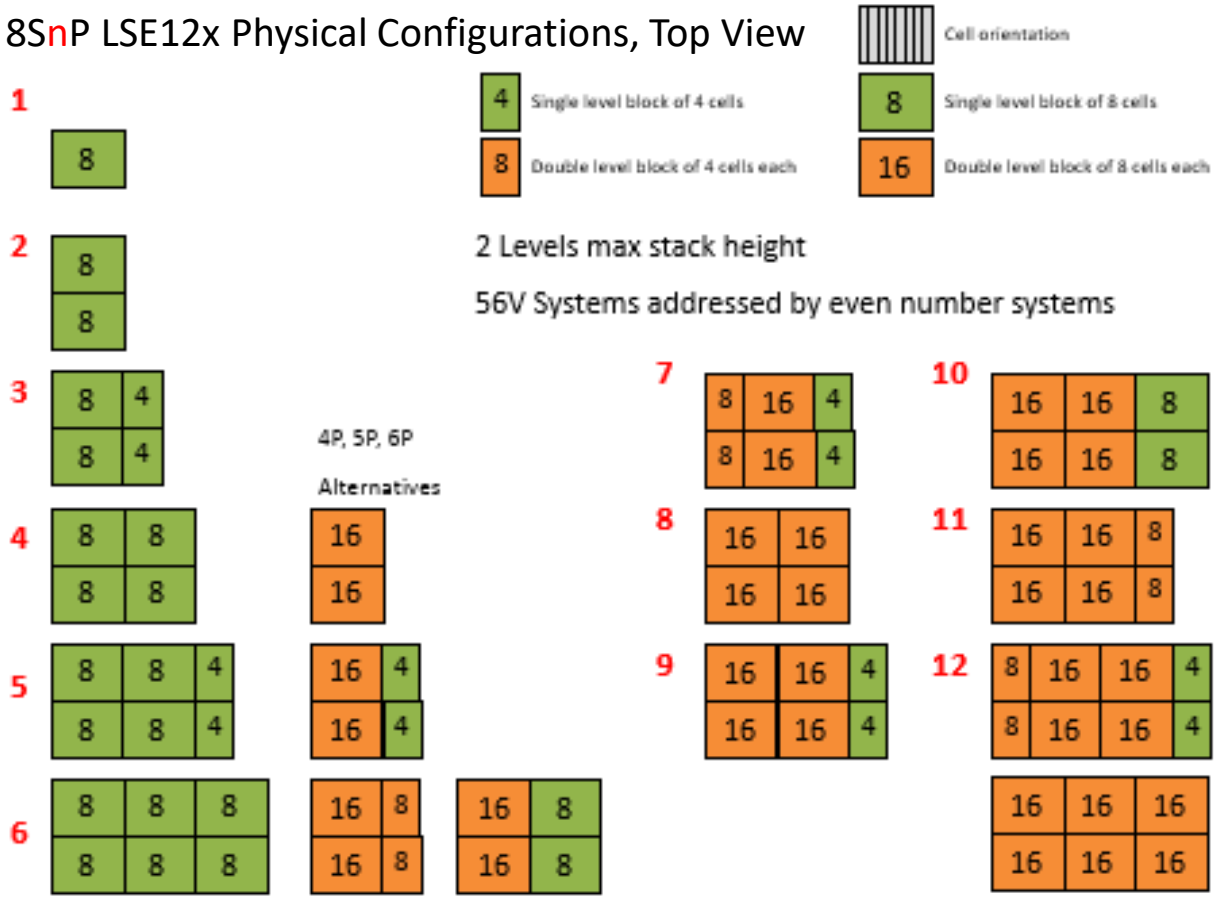

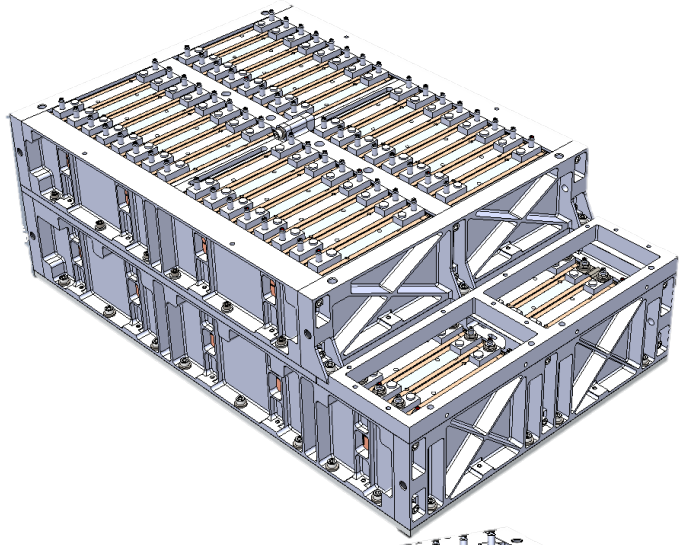

Config. 9 (72-cell) *Qual Unit*

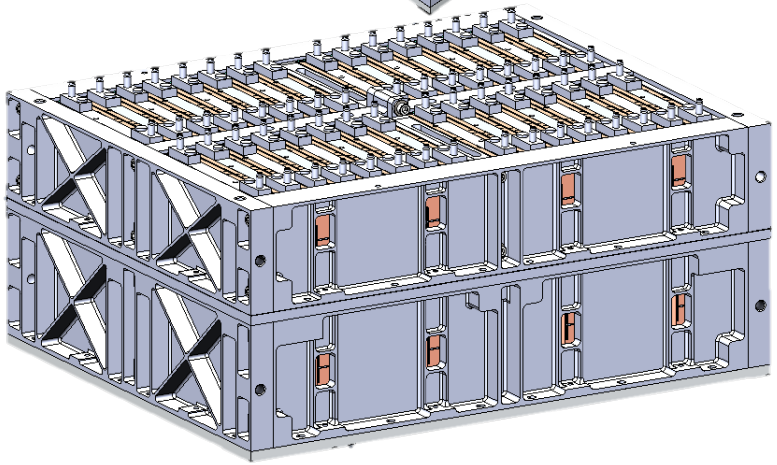

Config 8 (64-cell)

© 2023 by GS Yuasa Lithium Power Inc. NASA Battery Workshop 2023

MA12x-0808

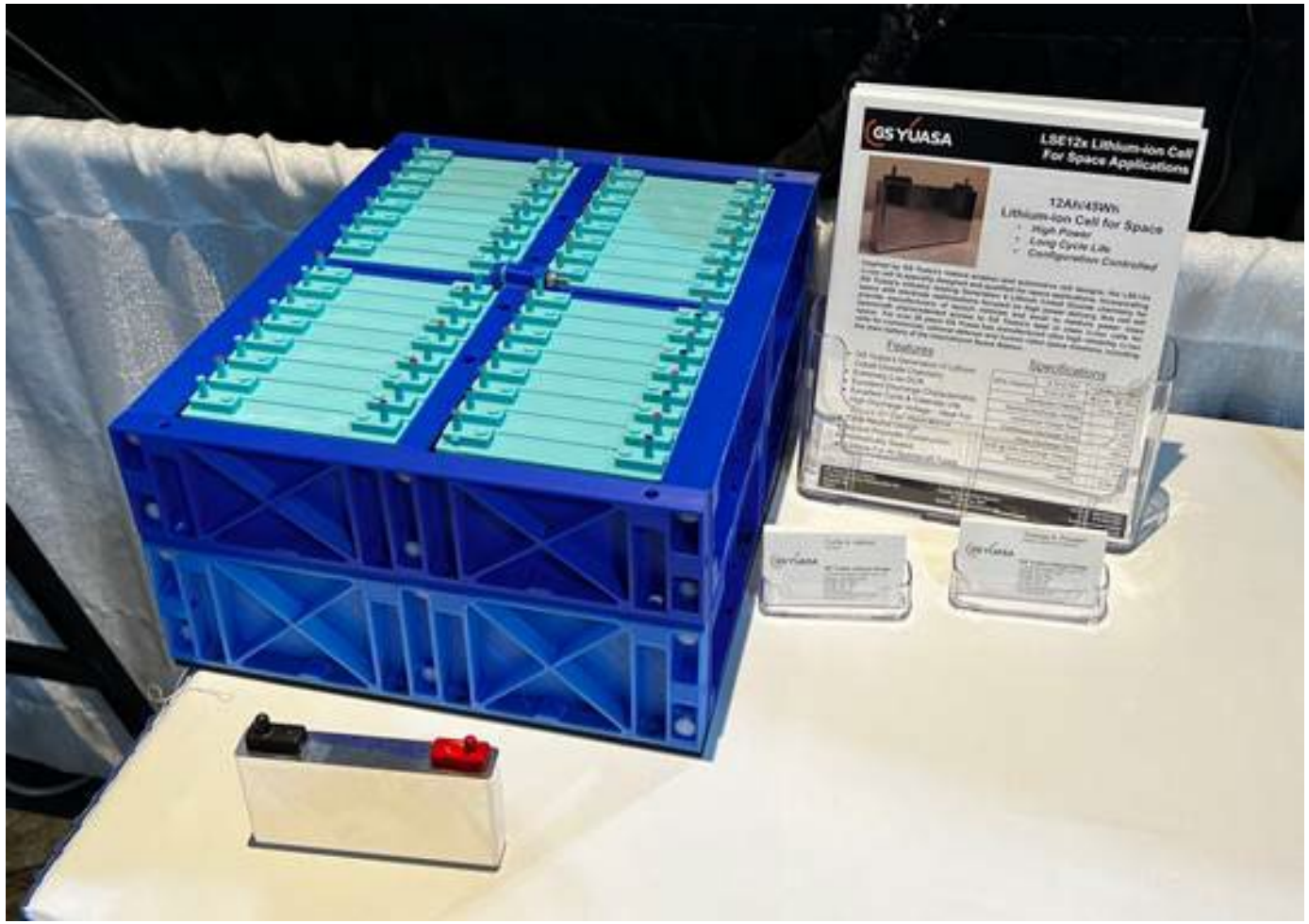

"MA12x-0808" (8s8p)
3D printed scale model of 64-cell ~2.9kWh Pack

© 2023 by GS Yuasa Lithium Power Inc. NASA Battery Workshop 2023

Thermal Management

- **Thermal Management Goal**
  - →Minimize thermal gradient to a difference of < 5°C
    - – From cell to cell in an 8S string
    - – From 8S string to 8S string
    - – From top assembly to bottom assembly

- **GYLP's Design Approach**
  - →Isolate the cells from each other (JSC 20793 Rev. D in mind…)
  - →Create a thermal path that conducts heat to the spacecraft baseplate interface.

© 2023 by GS Yuasa Lithium Power Inc. NASA Battery Workshop 2023

Thermal Analysis Summary

- Thermal model shows positive results with meeting the goal of a < 5°C thermal gradient in the battery elements.
- Cell to Cell and 8S block to 8S block show thermal uniformity with no major thermal concerns for top or bottom assemblies under these conditions.

BOTTOM LAYER TEMP MEASUREMENTS IN MODEL	CELL TOP ° C	CELL BTM °C	Cell Average from TOP and Btm ° C		TOP LAYER TEMP MEASUREMENTS IN MODEL	CELL TOP ° C	CELL BTM °C	Cell Average from TOP and Btm ° C
BL1-1	11.52	10.32	10.92		TL1-1	14.20	13.50	13.85
BL1-2	11.37	10.29	10.83		TL1-2	14.27	13.52	13.90
BL1-3	11.33	10.29	10.81		TL1-3	14.39	13.57	13.98
BL1-4	11.41	10.32	10.87		TL1-4	14.44	13.63	14.04
BL1-5	11.41	10.31	10.86		TL1-5	14.46	13.63	14.05
BL1-6	11.36	10.30	10.83		TL1-6	14.46	13.60	14.03
BL1-7	11.42	10.30	10.86		TL1-7	14.46	13.64	14.05
BL1-8	11.46	10.34	10.90		TL1-8	14.45	13.61	14.03
BL2-1	11.46	10.34	10.90		TL2-1	14.49	13.63	14.06
BL2-2	11.44	10.33	10.89		TL2-2	14.48	13.62	14.05
BL2-3	11.35	10.31	10.83		TL2-3	14.47	13.61	14.04
BL2-4	11.43	10.33	10.88		TL2-4	14.48	13.65	14.07
BL2-5	11.39	10.30	10.85		TL2-5	14.46	13.64	14.05
BL2-6	11.32	10.29	10.81		TL2-6	14.42	13.60	14.01
BL2-7	11.31	10.27	10.79		TL2-7	14.34	13.55	13.95
BL2-8	11.36	10.29	10.83		TL2-8	14.25	13.52	13.89
BL3-1	11.41	10.31	10.86					
BL3-2	11.21	10.28	10.75					
BL3-3	11.07	10.25	10.66					
BL3-4	10.93	10.23	10.58					
Cell Group	Max Temp °C	Min Temp °C	Delta T in group ° C		Cell Group	Max Temp °C	Min Temp °C	Delta T in group ° C
BL1	11.52	10.29	1.23		TL1	14.46	13.50	0.96
BL2	11.46	10.27	1.19		TL2	14.49	13.52	0.97
BL3	11.41	10.23	1.18					
Battery Estimated Delta T °C	4.23							

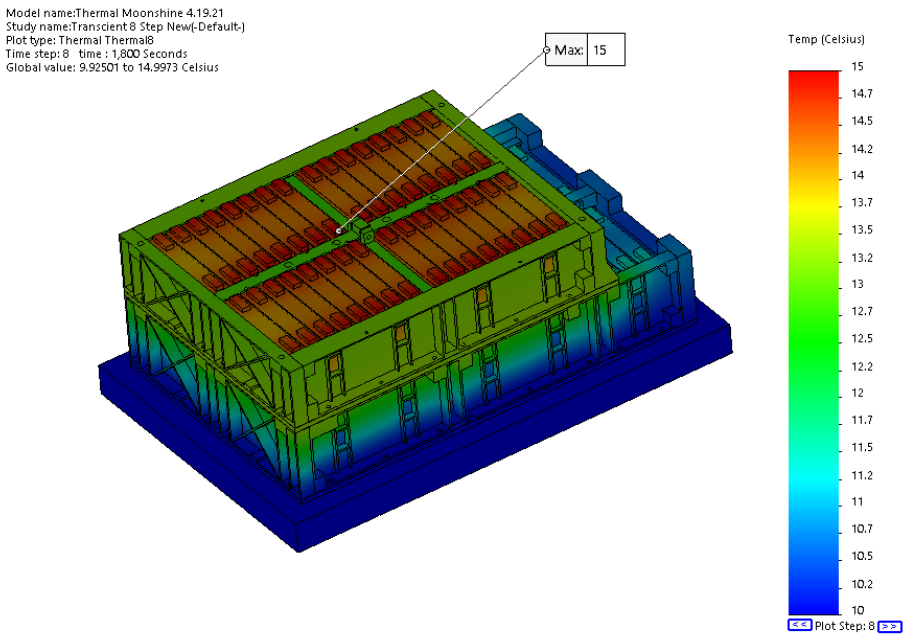

© 2023 by GS Yuasa Lithium Power Inc. NASA Battery Workshop 2023

Detection and Isolation of “Sick” Strings

- GYLP has developed mathematical models to analyze the performance of healthy and sick strings in an MA12x pack
- This manifests as unequal current sharing between the sick and healthy stings.

→ Example: Sick string 10% SOC divergence, 0.8C discharge rate

- Fault tolerance and anomaly mitigation has also been carefully considered. In the event of a cell fault, each series string can be isolated in the battery through a commandable normally closed latching relay. The net result will be a loss of Wh battery capacity equivalent to the single isolated string (360Wh).

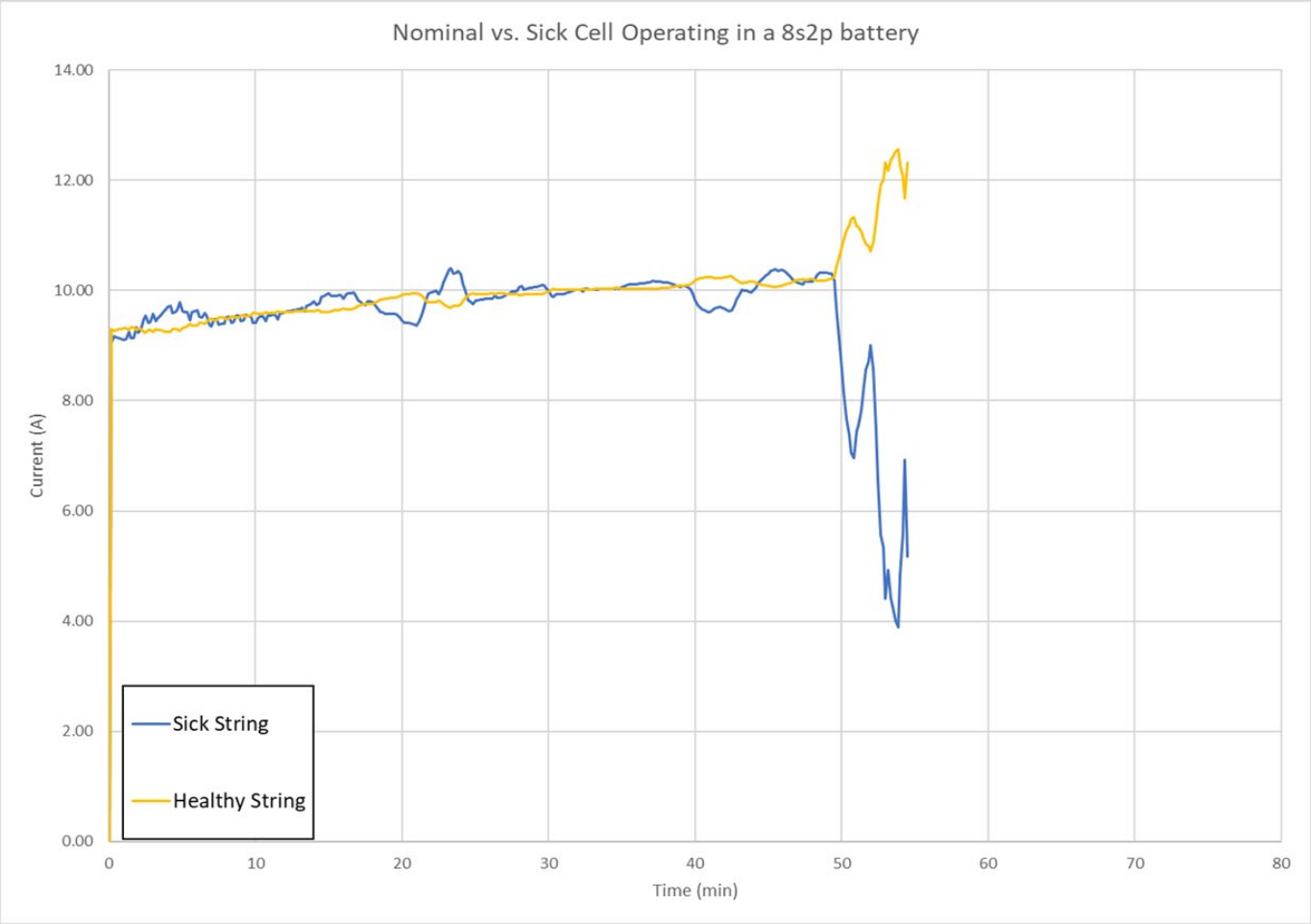

© 2023 by GS Yuasa Lithium Power Inc. NASA Battery Workshop 2023

GYLP Production Readiness

MA12x battery design and qualification:

- PDR: Complete
- CDR: Schedule for December 2023, MA12-0809 (8s9p)
- Qual Battery MRR/TRR: February 2024
- Qualification Complete: Q3/Q4 2024
- Production: Q1 2025

  → Target continuous manufacturing capability is one 8s8p battery per week (2.9kWh/week)

  → Less than 6-month lead time ARO for first unit to support constellation opportunities.

  → GYLP is pursuing facility upgrades to our Roswell, Ga facility to enable this production rate.

GYLP is internally funding all design and qualification efforts for the MA12x portfolio of batteries. This schedule could be impacted by existing and new business. Schedule could be accelerated with help from an anchor tenant for the MA12x battery.

© 2023 by GS Yuasa Lithium Power Inc. NASA Battery Workshop 2023

Summary

- GS Yuasa's Generation 4 LCO/Graphite chemistry provides meaningful performance increases from Generation 3 including:
  - Increased Energy Density
  - Excellent Capacity Retention under demanding cycle conditions
  - Decreased DCR for enhanced voltage performance under load

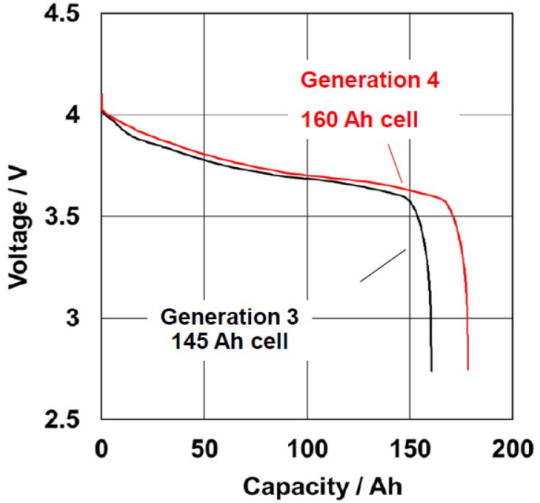

- Gen. 4 cells available from 12Ah to 205Ah in a single cell
  - LSE12x, LSE60, LSE112, LSE160, LSE205 Qualified
  - Energy and Power electrode optimizations

- LSE12x - New 12Ah small form factor cell added to the portfolio
  - Enabling smaller spacecraft access to industry leading performance
  - Scalable battery designed and built by GYLP in Roswell, Ga.
    - Configurations ranging from 720Wh to 4,320Wh

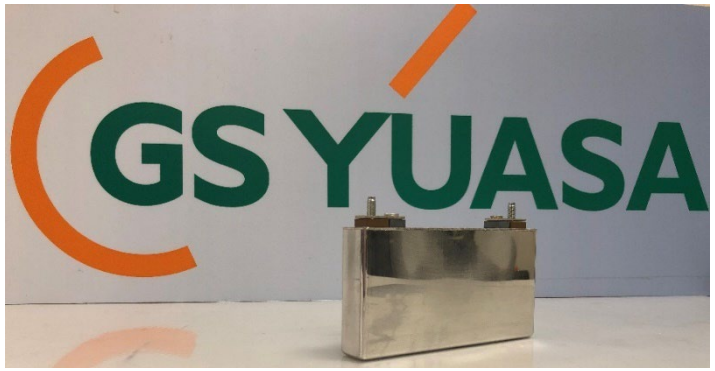

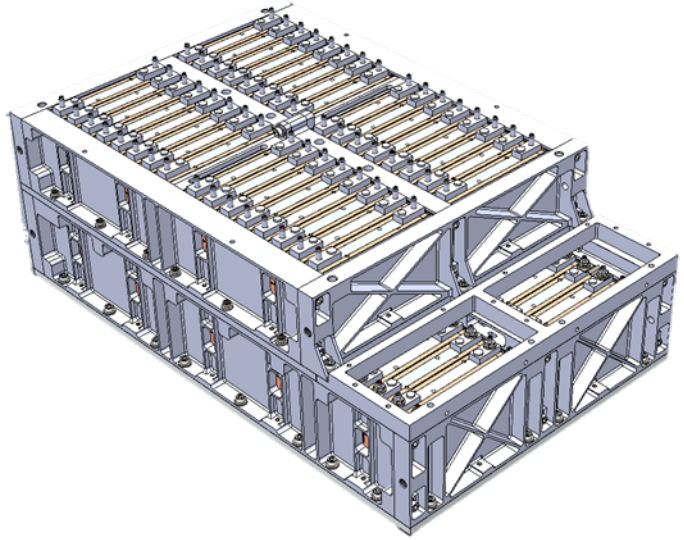

© 2023 by GS Yuasa Lithium Power Inc. NASA Battery Workshop 2023

Energy storage design test and manufacturing expertise

Industry leading spaceflight heritage

Validated and reliable performance modelling

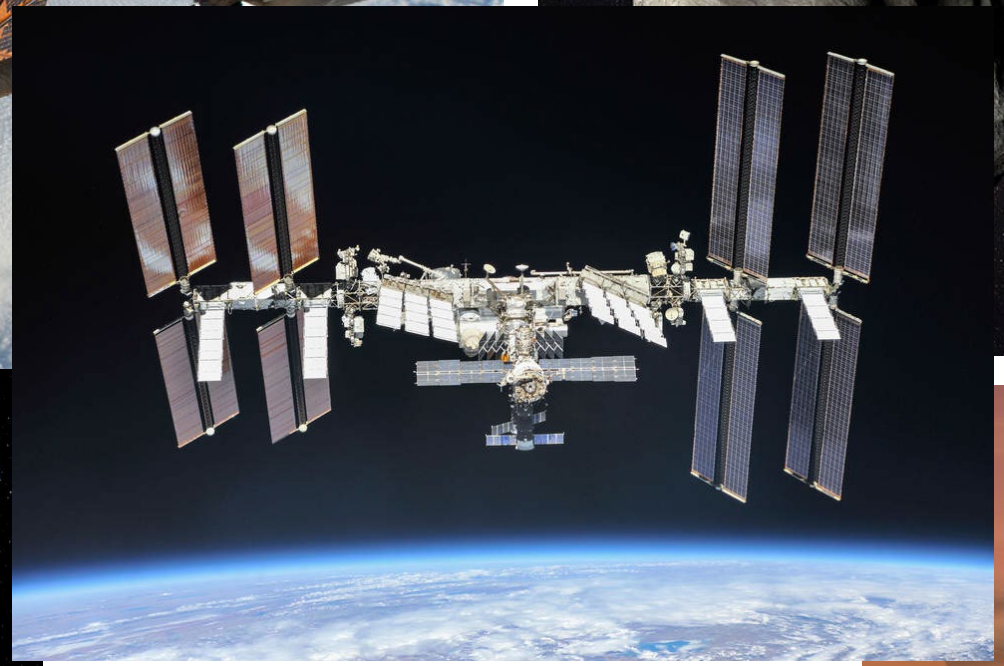

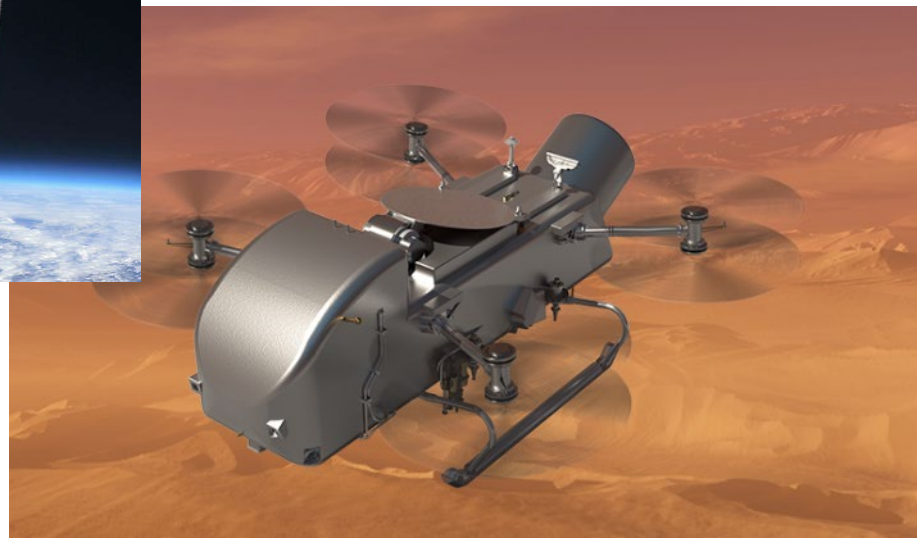

Visit
www.GSYUASA-LP.com

© 2023 by GS Yuasa Lithium Power Inc. NASA Battery Workshop 2023