EXPANSION PORT INTERFACE CONTROL DOCUMENT

FOR THE

SPHERES GUEST SCIENTIST PROGRAM

MIT Space Systems Laboratory & Aurora Flight Sciences Corp.

v1.0

Contents

A Revision History 10

1 Introduction 2

1.1 Overview 2

1.2 Pin Assignments 2

2 Mechanical Interface 4

2.1 Connectors 5

3 Power Lines 5

3.1 Power Supplies 5

3.2 Ground 6

4 Analog inputs 6

5 Reset Signal 7

6 US/IR Bypass 7

7 Serial Line 8

1 Introduction

This document describes the power and I/O interfaces available in the SPHERES Expansion port as well as the structural connections to mount an expansion item to a SPHERES satellite.

1.1 Overview

The expansion port consists of a single 100-pin connector that carries control and power signals that allow an external component to access the internal electronics of the SPHERES satellite. The signals include a UART serial line, three analog input lines, and bypass US/IR signals in the event the expansion item covers the sensors in the +X face of the satellite.

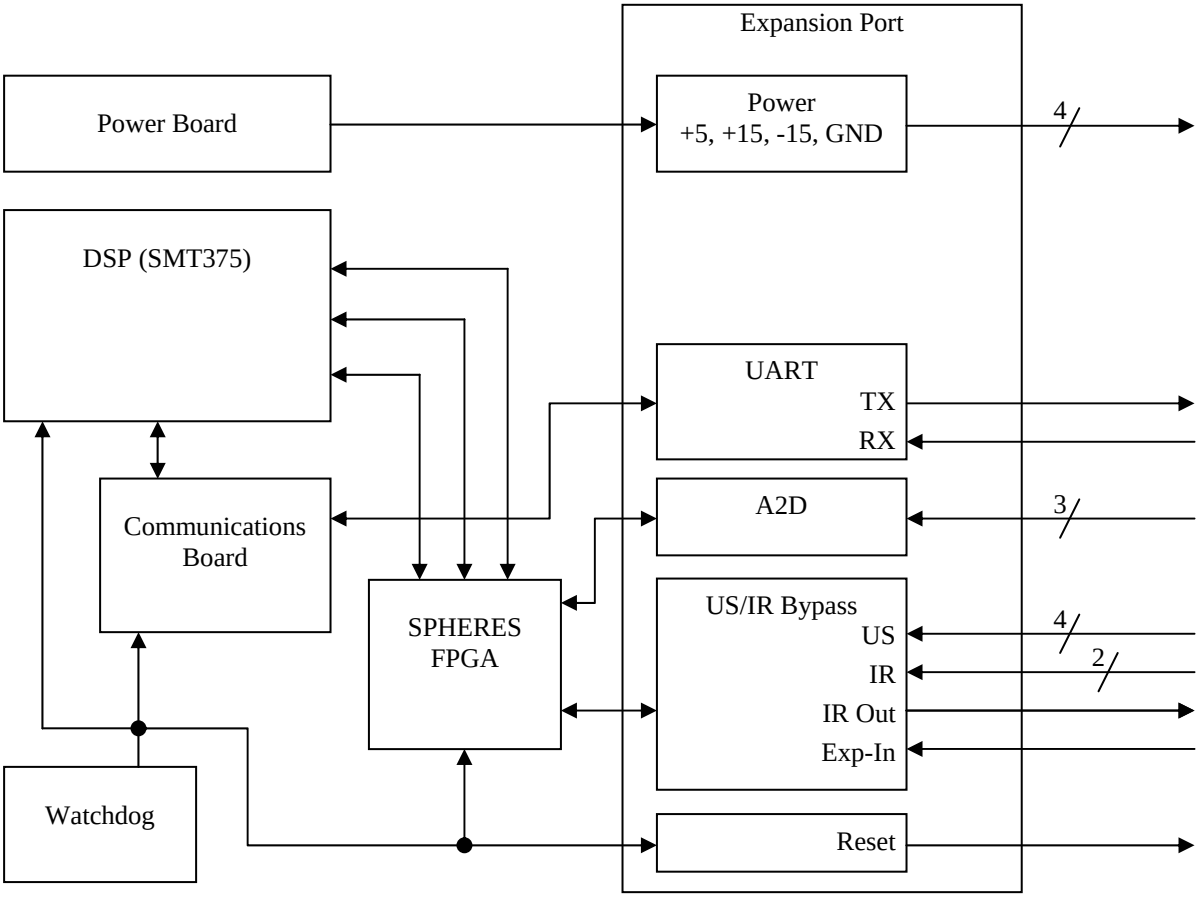

Figure 1. SPHERES Expansion Port Overview

1.2 Pin Assignments

The signals in the Expansion Port are listed in Table 1. The I/O is the function from the satellite side.

Table 1. Expansion Port Signals

Signal	Pin	Symbol	I/O[1]	Description
+5V	1	+5V	O	Positive 5V power supply. The pin has a .5A fuse to prevent damaging internal SPHERES components. This power is shared with internal SPHERES avionics.
+15V	52	+15V	O	Positive 15V power supply. The line has a 0.5A fuse. This supply is shared with internal SPHERES components.
-15V	51	-15V	O	Negative 15V power supply. The line has a 0.5A fuse. This supply is shared with internal SPHERES components.
Ground	2, 3, 35, 42, 44, 46, 48, 86, 89, 91, 93, 96, 98	GND	-	The common ground pin for all SPHERES electronic components.
Reset	49	/RESET	O	The reset signal **from** the satellite to the expansion item. The signal is negative logic (active low); it is triggered by the watchdog or the reset button in the satellite.
Do Not Connect	4-34, 36-41, 54-85	N/A	N/A	Unused pins. Do not connect these pins on the Expansion Port device
Analog in	43, 45, 47	A2D0 – A2D2	I	Analog input signals. The signals are fed to the internal SPHERES A2D through a 300Hz lowpass RC filter. The signal range is 0V-5V.
Expansion Item In Use	50	Exp-Port-In	I	A positive logic signal used to indicate that an expansion item which overrides the US/IR in the satellite is in use. When this pin is pulled high the satellite will bypass its internal US/IR sensors in the Expansion Port are and use the signals in the Expansion Port Connector.
US/IR In	87-88, 90, 94-95, 97	US-RX-##-#-EXT IR-RX-##-EXT	I	Ultrasound and infrared signals received by the expansion item to be used instead of the internal US/IR receivers in the Expansion Port. These signals are only used when Exp-Port-In is high.
IR Transmit	92	IR_XMIT	O	A command from the satellite to the Expansion Item to transmit IR (used when the expansion item covers the US/IR of the satellite).
UART Transmit	99	EXP-TX	O	A standard UART serial line transmit, at RS232 level. The data rate (which must be the same for the TX & RX) can range from 2400bps to 1.5Mbps.
UART Receive	100	EXP-RX	I	A standard UART serial line receive, at RS232 level.

[1] I/O = input and/or output as seen by the SPHERES satellite.

2 Mechanical Interface

The Expansion Port has a mechanical connection with four 2-56 screws mounting points. Figure 2 shows the mechanical interface of the expansion port item with the SPHERE, including the electrical and mechanical attachment points.

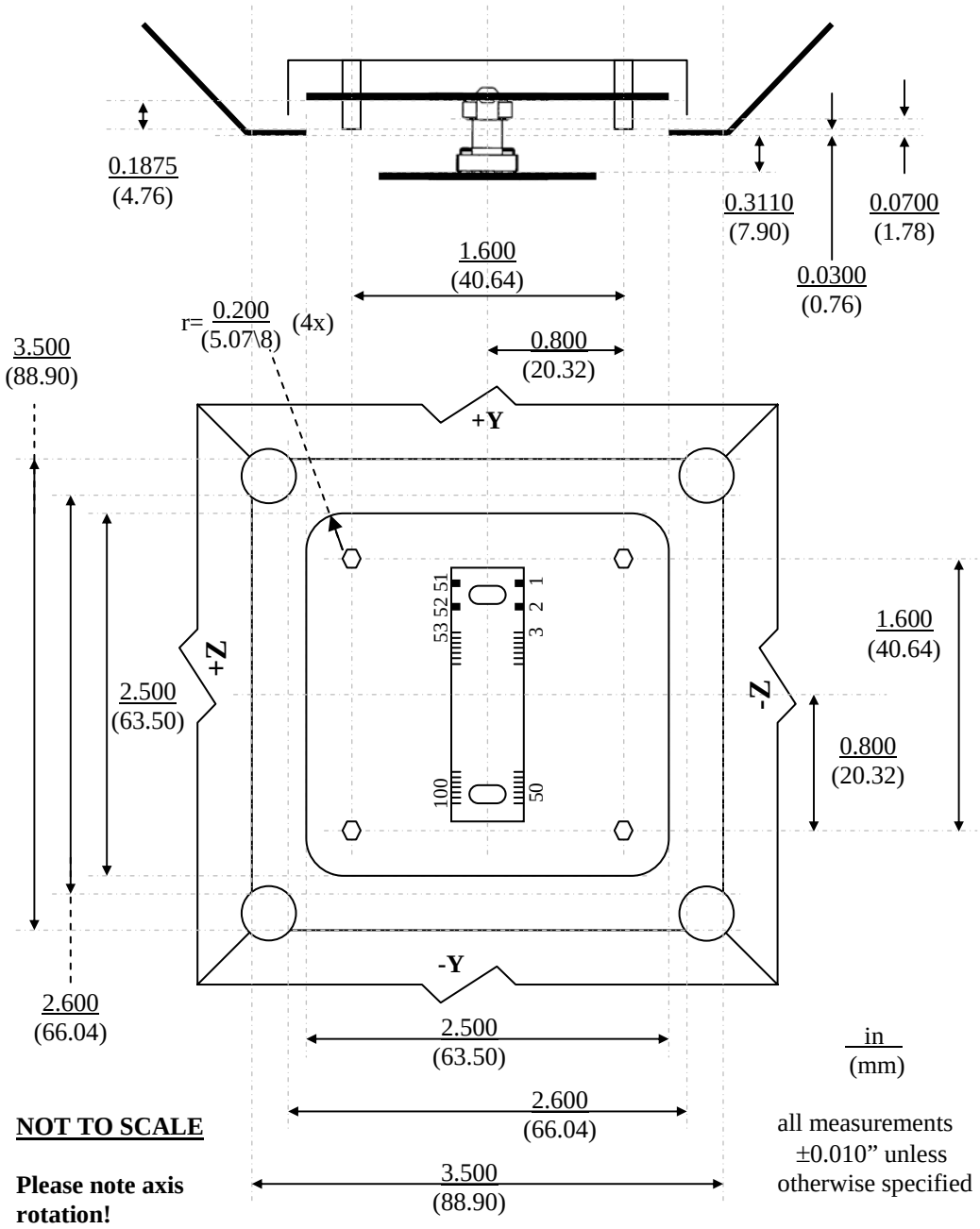

Figure 2. Expansion Port structural connections

2.1 Connectors

The connectors of the expansion port are manufactured by Hirose Electronics. Because the connectors are not easy to obtain, Aurora Flight Sciences. has acquired several dozen plugs for use in expansion items; scientists interested in creating their own expansion item should contact Aurora for further information on obtaining the necessary connector. The Hirose part numbers are listed in Table 2.

Table 2. Expansion Port Connector Part Numbers

Side	Part #
Satellite	Hirose EX80-100S(01)
Expansion Item	Hirose EX80-100P1

The satellite side has a socket that stands almost flush with the cover on the SPHERE; the Expansion Item has a plug that must extend from the edge of the board to plug into the SPHERES socket. The dimensions for the separation between the mated boards is shows in Figure 3. Note that while the connector has alignment pins it does not have any polarizing elements (the connector can be physically inserted when rotated 180°, but the electrical connections will not match), therefore the Expansion Item will need to provide polarization marks to ensure the item is never inserted backwards.

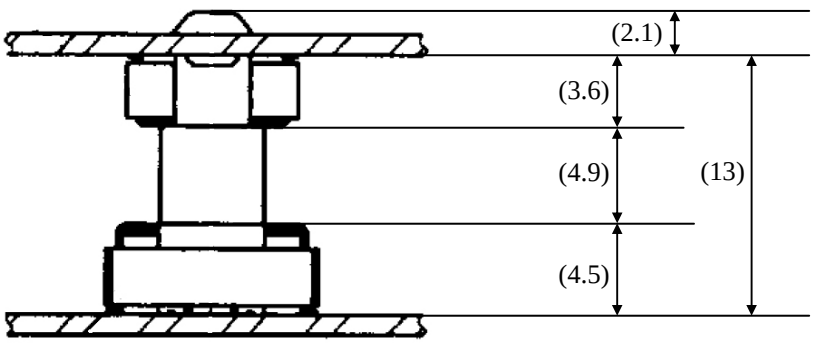

Figure 3. Mated connector separation (mm)

3 Power Lines

The expansion port provides three power lines and one common ground power pin. Figure 4 shows the connections of the power pins to the rest of the internal SPHERES avionics. As shown, all the power supplies are individually fused.

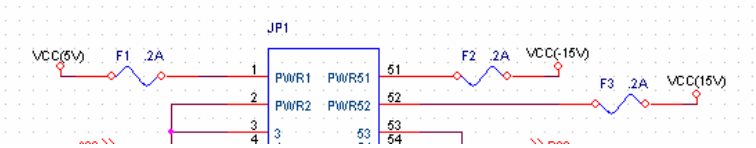

Figure 4. Expansion Port Power Connectors

The fuses have a non-trivial / non-constant resistance. Therefore, as current is drawn from the internal SPHERES supplies the voltage changes. Therefore, these power supplies must be treated as unregulated power supplies. It is strongly recommended that the +5V supply be used as a source for regulated +3.3V external power (the regulator must be installed in the expansion port item). The +15V volt can be used for +12V or +5V as needed; the -15V should be used for voltages no lower than -12V.

3.1 Power Supplies

The internal SPHERES supplies are rated as follows:

Table 3. Power Supplies available in SPHERES

Supply	Available @ Expansion Port
+3.3V	N/A[2]
+5V	0.5A
+15V	0.5A
-15V	0.5A

The available power at the Expansion Port has been rated to prevent overload of the supplies since all of them are in use internally in the satellite. All the internal fuses are PolySwitch (PPTC) resettable surface mount components (Tyco Electronics/Raychem Circuit Protection part # miniSMDC050). The PPTC devices trigger temperature rise in the device, therefore the external item must account for further temperature increase if it creates heat. The fuse self-resets once its temperature returns to normal.

3.2 Ground

The Expansion Port connector provides multiple ground pins, all of which have the same common ground. But all pins except for pin 2 have 6-mil traces rated for only a few milli-amps. Therefore it is imperative that only pin number 2 be used to connect ground for the power return of an expansion item.

4 Analog inputs

The three analog signals input through the expansion board are fed through a single pole RC lowpass filter set at 300Hz. The filtered signal is sent to the standard SPHERES A2D converters which can be accessed directly by the software using the C pointers for the A2D sub-system:

Pre-defined in the SPHERES software is the pointer value:

```
A2D_ptr = (volatile unsigned int*) GB_ADDR_MAP(A2D_ADDR);
```

which can be used to access the Expansion Port A2D values by adding 3, 4, or 5 when reading:

```
a2d_in = *(A2D_ptr + [3,4,5]);
```

The A2D is sampled at 1Khz by the FPGA, a value which cannot be changed. But the user may choose to ignore samples if a lower rate is desired.

[2] NOTE: The +3.3VDC is not available at the Expansion Port

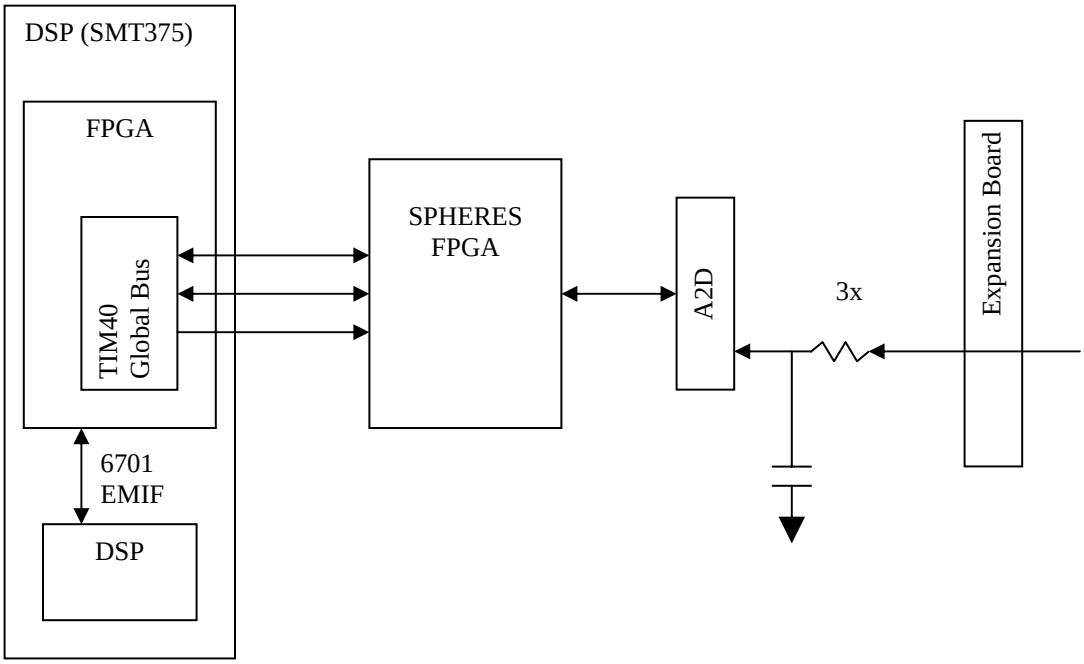

Figure 5. Analog Inputs Block Diagram

5 Reset Signal

The expansion port outputs the general SPHERES Reset signal to command the expansion item to reset when the SPHERES does. The reset signal is a negative logic (active low) signal that is on for at least 100ms when active. The signal is triggered by either the user pressing the reset button (it remains low as long as the reset button is being pressed), or by the watchdog timing out (which creates a 100ms pulse).

6 US/IR Bypass

When the expansion item covers the ultrasound/infrared sensors of the +X face of the SPHERES satellite, where the expansion port is located, the expansion item should replace those signals with metrology sensors on its own hardware, or at the least indicate to the satellite that the sensors are covered. To this purpose the `EXP_IN` signal is present in the expansion board. This is a positive logic signal which tells the DSP and other hardware in the satellite whether the US/IR sensors are being covered or not.

If the signal is high (active) the internal SPHERES hardware will bypass via a multiplexer the signals from the internal metrology boards and instead send to the DSP the signals that are present in the expansion board. If the expansion item does not replace the signals correctly, then the lines should be tied to either Vcc or Ground as follows:

Table 4. US/IR Signal connections when NOT bypassed (EXP-IN low)

Signal	Pin	Inactive
US RX	87,88,94,95	GND
IR RX	90,97	Vcc (+5V)

In the case where the expansion item does not cover the US/IR sensors, then the signal `EXP_IN` should be either left as a no-connect or tied to GND.

The `IR_XMIT` signal can always be used, regardless of the state of the `EXP_IN` pin. This signal indicates that an IR signal should be transmitted. In the case where the expansion item covers the US/IR sensors in the SPHERE, it should also provide replacement IR transmitters and use this signal to trigger them. This signal is active low.

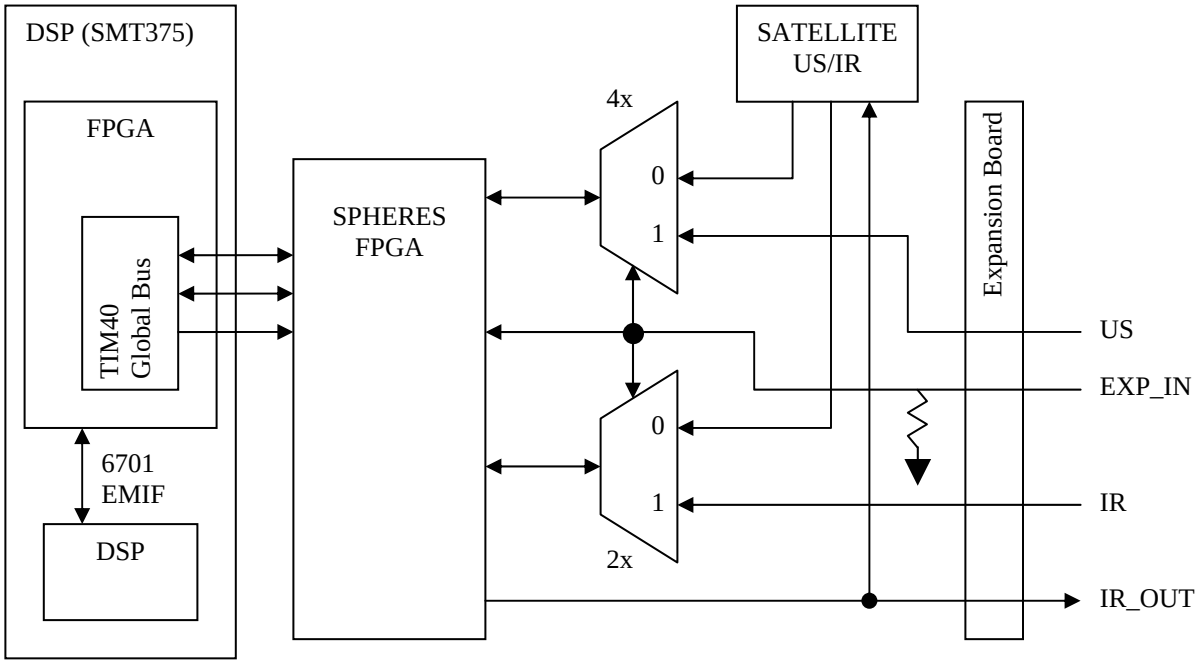

Figure 6. US/IR Bypass Signals Block Diagram

7 Serial Line

The expansion port provides access to UART transmit and receive lines. The lines have been converted to RS232 levels, therefore the expansion item will need to convert the signals down to standard logic levels if the port is used.

The UART line operates via the DSP's "commports" through a PIC processor that converts the serial UART data to parallel data used by the DSP. Therefore the user will need to query the "commports" when trying to read or write through the Expansion Port. Since the communications ports provide internal interrupts to the DSP, interrupt service routines can be created for both transmission and reception of data via the Expansion Port UART – this has not been implemented in the standard SPHERES software. The basic mechanism to access the port is:

Pre-defined in the SPHERES core code:

```
static volatile unsigned *SMT335CP4 =(unsigned *)0x03000020;
```

To write data to the commport:

```
*SMT335CP4 = out;
```

To read the data available in the commport:

```
in = *SMT335CP4;
```

Both the PIC and UART use queue's to save the data, and once the data is read or written out it is impossible to recall it. A single call of the write or read will push/pull an item into/off the queue.

Note that neither the PIC nor the DSP commport have large amounts of RAM space. If the PIC RAM (96 bytes) fills up, then any subsequent bytes sent to the pick will be thrown out until space becomes available. If the DSP commport queue fills up (16 bytes) then either the processor (when transmitting out of the DSP) will halt or the PIC (when the DSP is receiving) will halt. In order to prevent the processor from halting the PIC continuously reads data from the commport when available, so that its queue is never full; but if the PIC's queue is full the data will be discarded. The following figure shows a block diagram of the serial line operations.

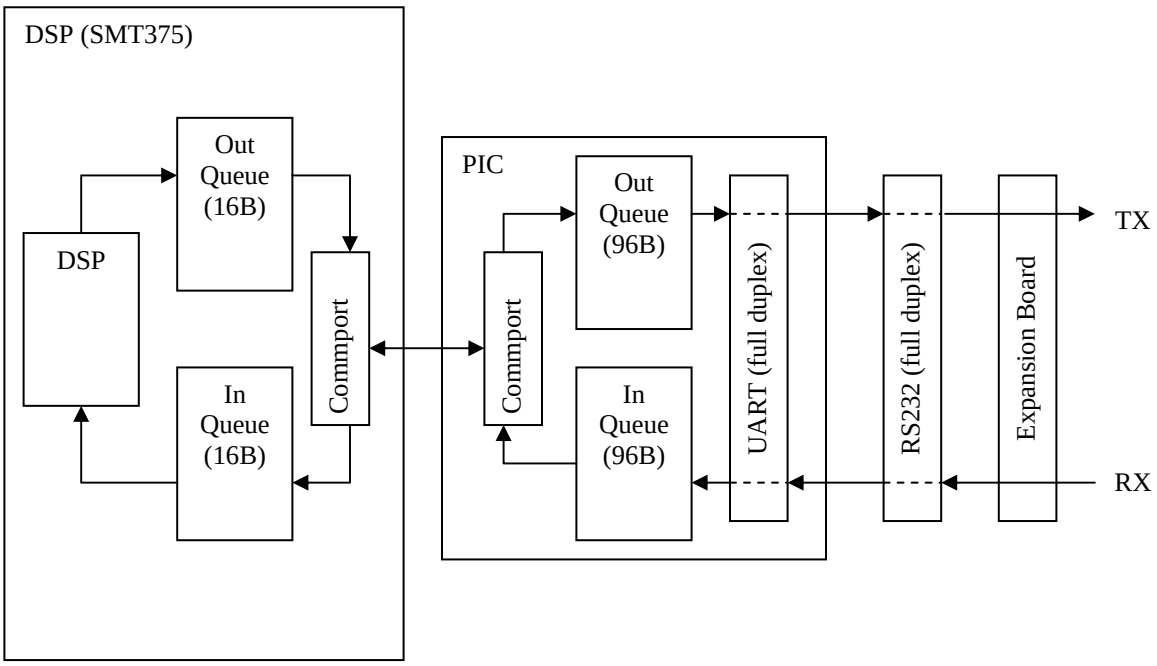

Figure 7. Serial Line Block Diagram

The UART is 8-bit only, and therefore all incoming and outgoing data should be masked by `0xFF`. Higher order bytes are reserved to control the PIC processor.

The most important and useful PIC control is the ability to change the data rate. The Expansion Port UART can range in data rate from 9.6kbps to 1.25Mbps. To change the data rate use the following command:

```
*SMT335CP4 = 0x11##
```

where ## is the one-byte data rate from the following table:

Table 5. UART Baud Rate Selection

Baud (kbps)	**## (hex)**	***Decimal***
9.6	`0x81`	*129*
19.2	`0x40`	*64*
38.4	`0x20`	*32*
57.6	`0x15`	*21*
115.2	`0x0A`	*10*
250	`0x04`	*4*
625	`0x01`	*1*
1250	`0x00`	*0*

Successful data rates of up to 250kbps have been demonstrated to work with SPHERES. Data rates above 250kbps can be implemented, but are only used for "trigger" events, since the data is not always accurate.

A Revision History

Version	Date	Comments
0.7 (ASO)	2004/04/24	Preliminary draft
0.9 (ASO)	2004/04/25	Continued revisions before initial release: added measurements to mechanical section and part number to the power line fuses. Added block diagram of serial line. Re-arranged some sections for better flow.
0.95 (JM)	2010/01/07	Update for InSPIRE GSP release.
1.0 (ASO)	2006/06/	Modified “Power Supply” section; general review for GSP release.