Why Can't We All Get Along? II (The Sequel)

Larry Wolfarth
Email: lawrence.wolfarth@nasa.gov
Cell: 571-216-2224
Office: 202-358-0065

Presentation to 2013 NASA Cost Symposium
August 27, 2013

JOHNS HOPKINS UNIVERSITY
Applied Physics Laboratory

Special Thanks

Justin Van Genderen ad, based on Stanley Kubrick's "2001: A Space Odyssey" film
http://laughingsquid.com/2001-a-space-odyssey-themed-ads-for-hal-9000-pan-am/

- *Dr. Neal Hulkower (ret.)*
- *Ray Covert*
- *John Neatrour*
- *Nate Menton*
- *Jo Gunderson*
- *Joe Hamaker*

A Brain Challenge…

The Out-Shuffle, 4 cards

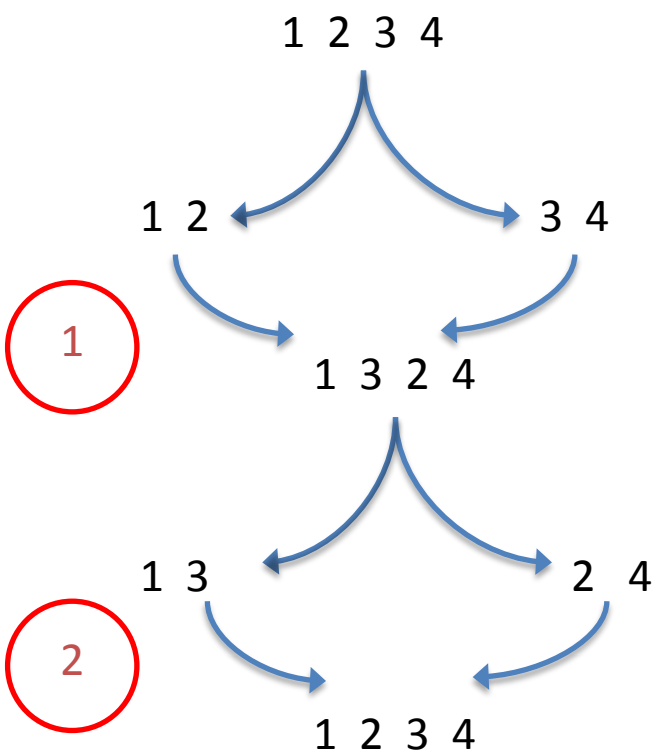

The In-Shuffle, 4 cards

x	**1 2 3 4**
1	**3 1 4 2**
2	**4 3 2 1**
3	**2 4 1 3**
4	**1 2 3 4**

Cards in Deck	Number of out- and in-shuffles required to restore original order	
4	2	4
8	3	6
12	10	12
52	?	8
54	?	?

http://www-stat.stanford.edu/~cgates/PERSI/papers/83_05_shuffles.pdf
Persi Dalconis et al. "The Mathematics of Perfect Shuffles"

The Original Presentation (2006)

Focus was on reconciliation of multiple cost estimates

Why Can't We All Just Get Along?

Lessons In Reconciling Cost Estimates

Neal D. Hulkower, Ph.D.
Vice President, Operations
nhulkower@mcri.com
(703) 584 7001

Lawrence Wolfarth
lwolfarth@mcri.com
(571) 216 2224

© MCR, LLC MCR Proprietary - Distribution Limited

Affidavit of Prejudice

The authors are veterans of many Independent Cost Estimates (ICEs) and Very Few Program Office Estimates (POEs) by Choice!

© MCR, LLC MCR Proprietary - Distribution Limited

Context:

- Project estimates are often "flawed"
- Search for "truth"

Searching for the Truth*

1961: NASA Administrator Jim Webb asked to provide Congress and President Kennedy with a manned moon project

- Webb had been briefed on a $10 billion project
- He prudently decided to quote a $20 to $40 billion range

** Joseph Hamaker. "But What Will It Cost? The Evolution of NASA Cost Estimating". Presentation to 2000 NASA Cost Estimating Symposium*

- 1983: O'Keefe Sullivan from MSFC… named lead estimator for Space Station
  - Sullivan estimate was $11.8 to $14 billion (1984 $)
  - NASA Administrator Jim Beggs, under pressure to propose something affordable, committed to Congress in September of 1983 to build the Station for $8 billion
  - NASA pushed ahead with Station Phase B
  - In the fall of 1987 the Critical Evaluation Task Force was organized to narrow the options
    - Bill Rutlege led team of NASA estimators (Bill Hicks, Richard Whitlock, Tom LaCroix and Dave Bates)
    - The new Station baseline design was estimated at $14 billion, which was submitted to OMB

Beyond Political Considerations: Cost Estimates Are Based on Models…

… and models are imperfect representations of a future reality

Why We Should Expect Problems (Theoretical)

" 'Four' is cloned from 'Two', and has the mentality of an overly-curious child. Unfortunately since he is a clone-of-a-clone, his IQ is considerably lower than that of his predecessors, since the personality defects are more pronounced when a clone is cloned (The analogy from the movie refers to how a copy of a copy may not be as 'sharp' as the original)." http://en.wikipedia.org/wiki/Multiplicity_(film)

Findings (2006)

- **Why do cost estimates differ?**
  - ***Different Motives***
  - ***Different Methodologies***
  - ***Time Lag***
  - ***Lingering Vagueness***
  - ***Different Ground Rules and Assumptions***
- **Estimate reconciliation is a process of understanding what drives the differences***

*Not the differences *per se*

Summary (2006)

- *Any cost estimate is a prediction and predictions are always precisely wrong!*
- *There are any number of reasons why cost estimates differ*
- *Recognize that reconciliation means identifying the valid reasons for the differences, not unnaturally forcing two estimates closer to each other*
- *Use relevant history as a source of sanity checks*

- **The Program/Project office estimate (POE) represents more of a policy as to how much management is willing to pay and what the head count will be**
- **The ICE is more likely to represent how much the program or project actually could cost**

What's Changed at NASA in Cost Estimating Since 2006?

Evolution of Confidence Level Analysis at NASA

Source: Charles Hunt "JCL Journey: "A Look into NASA's Joint Cost and Schedule Confidence Level Policy" 2013 NASA Virtual PM Challenge.

Project Estimates (Advocacy)

Project

Primarily Bottoms up Point Estimates and Cost Confidence Levels

Joint Cost and Schedule Confidence Level (JCL)

2002 and before | 2003 - 2007 | 2/2007 | 1/2009 | 5/2009 | 12/2009 | 11/2010 | 8/2012

Assessment

Parametric estimates and Assessment

Formalized Cost Confidence Level Policy (2006)

JCL Policy Established

Cost-Loaded Schedule Requirement Established

Refined Requirements for KDP-C Established

Add KDP-B Confidence Levels for cost & schedule ranges

NPR 7120.5E Effective

Parametric-Based Confidence Levels

Assessment of Project JCLs

KDP-B cost & schedule probabilistic ranges

"Independent" Estimates (Non-Advocacy)

A Change in Perspective

2006

What's the right cost estimate?

2013

What's the right estimated cost (range)?

Recent NASA Cost Growth History

Source: http://www.nasa.gov/pdf/754125main_12-NASA_FY14_M%26P508-pt3.pdf

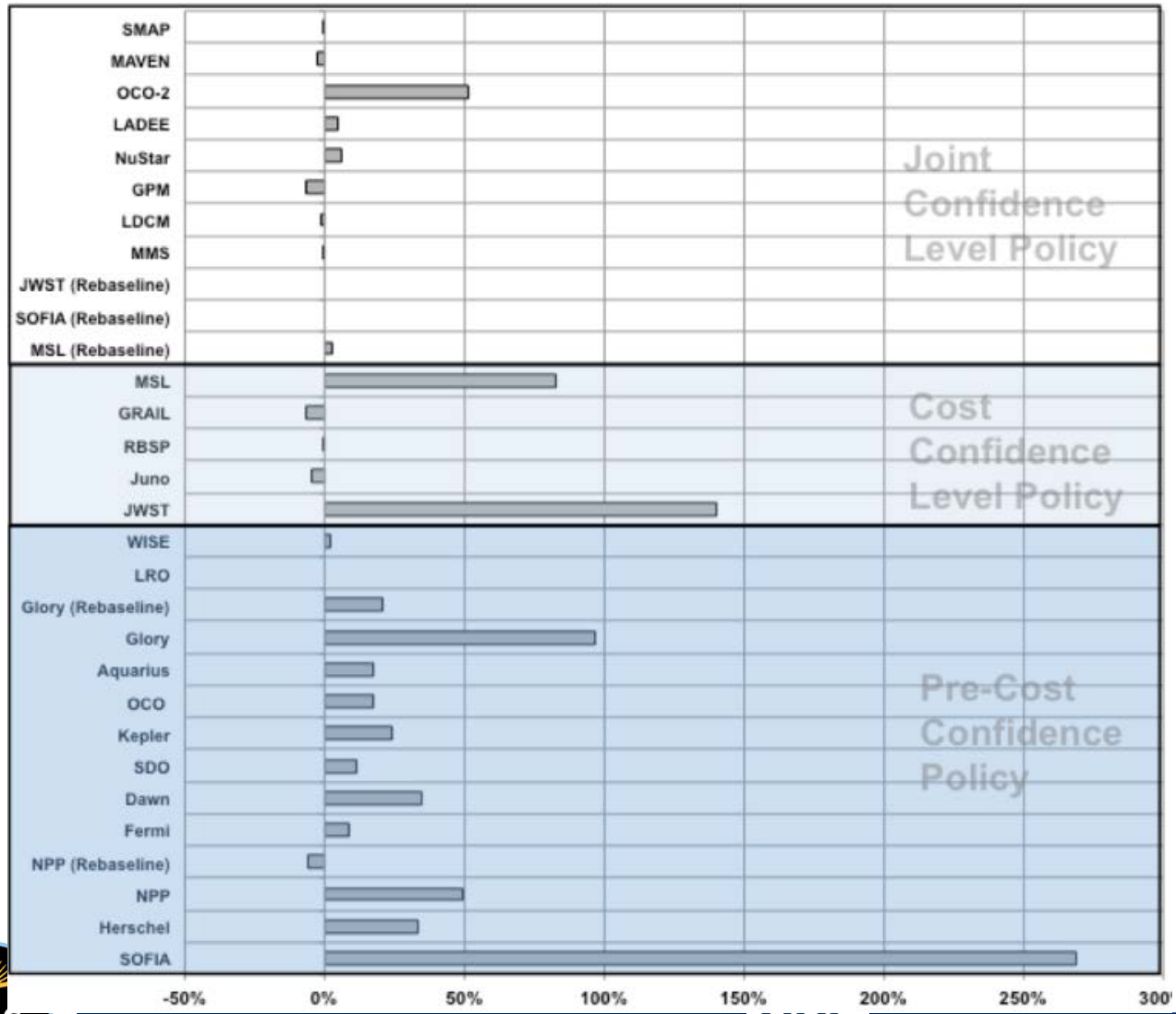

Overall reduction in cost growth attributable to a combination of:

- Improved cost estimating, esp. introduction of cost ranges
- Improvements in Program Planning & Control (PP&C)
- Increased oversight
- Consistent policy and support for Unallocated Cost Expenditures (UFE), schedule reserves

But…

Source: http://www.nasa.gov/pdf/754125main_12-NASA_FY14_M%26P508-pt3.pdf

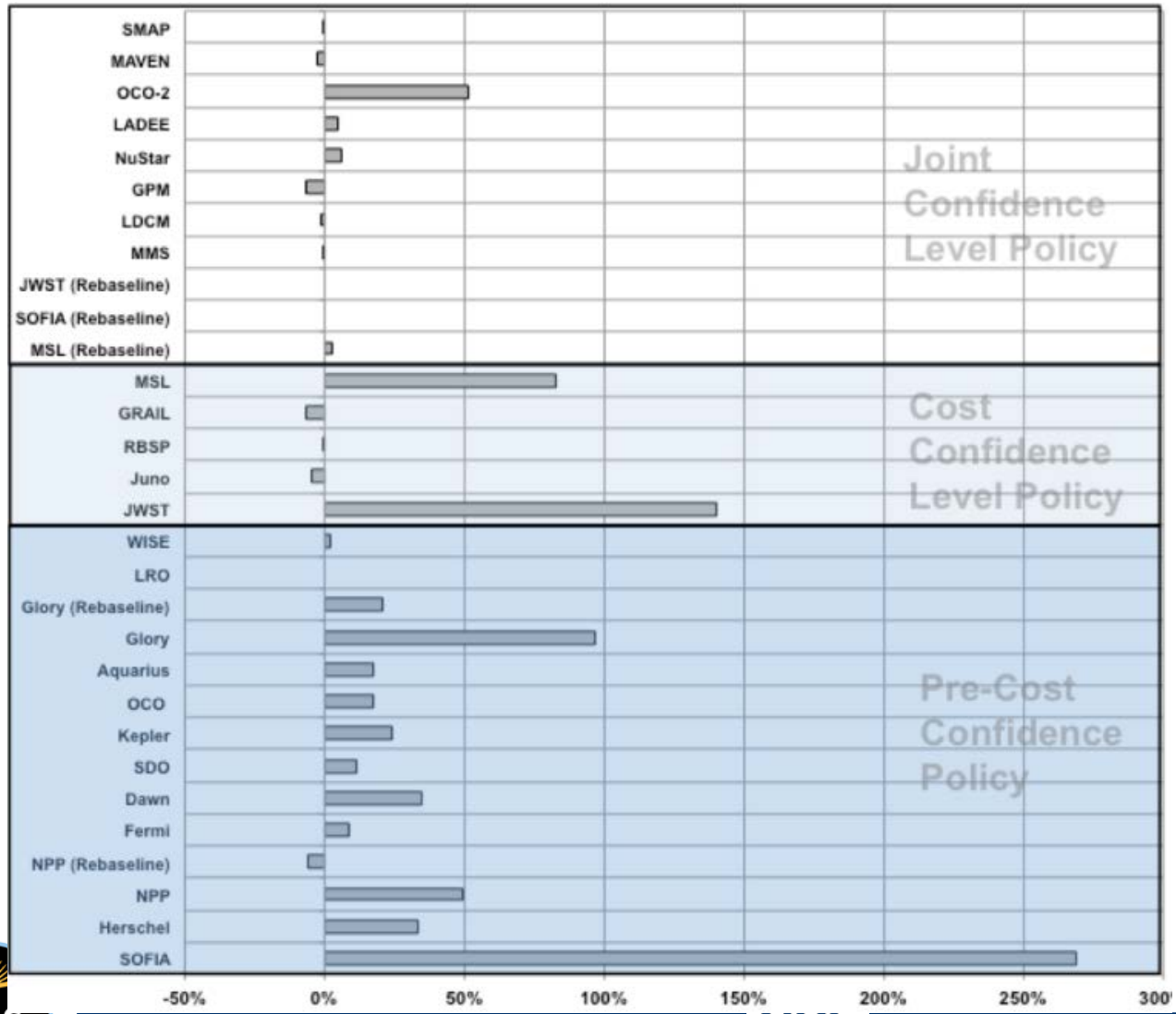

- Cost growth remains a significant challenge on some major missions
- Remains difficult to predict which missions will experience cost growth and its magnitude
- Is it RISK?
- Is it UNCERTAINTY?

Cost Estimates Available to NASA For PDR/KDP-C Program Analysis

2010:

- **Project Office Baseline Cost Estimate**
- Program Office, Center ICEs
- Mission Directorate ICA
- *Project Office ICE*
- IPAO-generated ICE

2013:

- **Project Office Baseline Cost Estimate**
- Program Office, Center ICEs
- Mission Directorate ICA
- ~~*Project Office ICE*~~
- ~~IPAO-generated ICE~~
- **Project Office JCL results**
- **IPAO JCL review & analysis**

How can estimates be combined to generate more robust cost estimates?

A Case Study: Identifying a Robust Cost Range (KDP B)

"Wisdom of the crowd"

- *"the process of taking into account the collective opinion of a group of individuals rather than a single expert to answer a question"*
- Statistician Frances Galton at a 1906 English country fair….
- Can we use the information in our multiple estimates to define better cost ranges?

Surowiecki, James. *The Wisdom of Crowds: Why the Many Are Smarter Than the Few and How Collective Wisdom Shapes Business, Economies, Societies and Nations.* Doubleday, 2004. ISBN 978-0-385-50386-0.

Estimate	JCL 50th Pct Cost	JCL 70th Pct Cost
Project	99%	101%
A	103%	108%
B	95%	102%
C	**90%**	**109%**
Median	97%	105%
Median (excl. Project)	95%	108%

Need for New Approaches to Modeling Costs

- "What is wrong with space system cost models?" by Keller, Collopy, Componation* raises criticisms of cost models:
- Parametric models only predict the past
- They lack insight
  - Predictive power (R^2) not the same as explaining the relationship between design variables and cost
  - *Weight is not a cost driver*
- Limited support for
  - Detailed design trades
  - Management, process trades

*http://dx.dol.org/10.1016/j.astro.2013.07.014

Need for New Approaches to Modeling Costs (cont)

- They encourage management, engineers to focus on process over engineering judgment
- They discourage our understanding cost growth as an endogenous process
  - Assembly, Integration & Test (AI&T)
  - UFE as good management strategy…but why?
  - Risk or uncertainty?

*http://dx.dol.org/10.1016/j.astro.2013.07.014

How Might We Model Cost?

- What if we regard final cost as the outcome of a complex, dynamic, non-linear feedback system?
- That means that outcomes are the result of the combination of
  - Initial conditions
  - Strategies
  - Probabilities associated with manifestations of risks and uncertainties
- Some outcomes are “extreme”—abandoned projects, significant cost & schedule growth

The Shuffle Questions

There is a mathematical model

Cards in Deck	Number of out- and in-shuffles required to restore original order	
4	2	4
8	3	6
12	10	12
52	?	8
54	?	?

http://www-stat.stanford.edu/~cgates/PERSI/papers/83_05_shuffles.pdf

Persi Dalconis et al. "The Mathematics of Perfect Shuffles"

"System of Systems: An Architectural Framework to Support Development Cost Strategies"

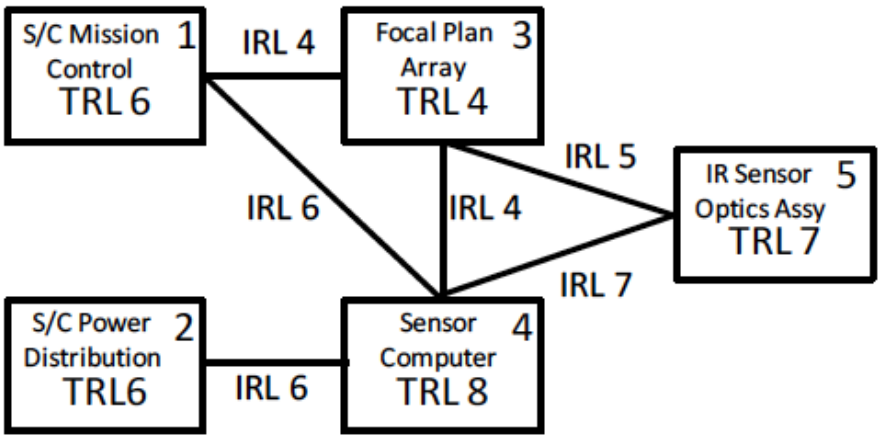

Figure 15 - SoS Functional Block Diagram

$$SRL = IRL \times TRL$$

$$\begin{pmatrix} SRL_1 & SRL_2 & SRL_3 \end{pmatrix} = \begin{pmatrix} IRL_{11} & IRL_{12} & IRL_{13} \\ IRL_{12} & IRL_{22} & IRL_{23} \\ IRL_{13} & IRL_{23} & IRL_{33} \end{pmatrix} \times \begin{pmatrix} TRL_1 \\ TRL_2 \\ TRL_3 \end{pmatrix}$$

$$\text{Composite SRL} = 1/n(SRL_1/n + SRL_2/n + SRL_3/n)$$
$$= 1/n^2(SRL_1 + SRL_2 + SRL_3)$$

Figure 9 - SRL Mathematical Approach

Complexity as a cost driver

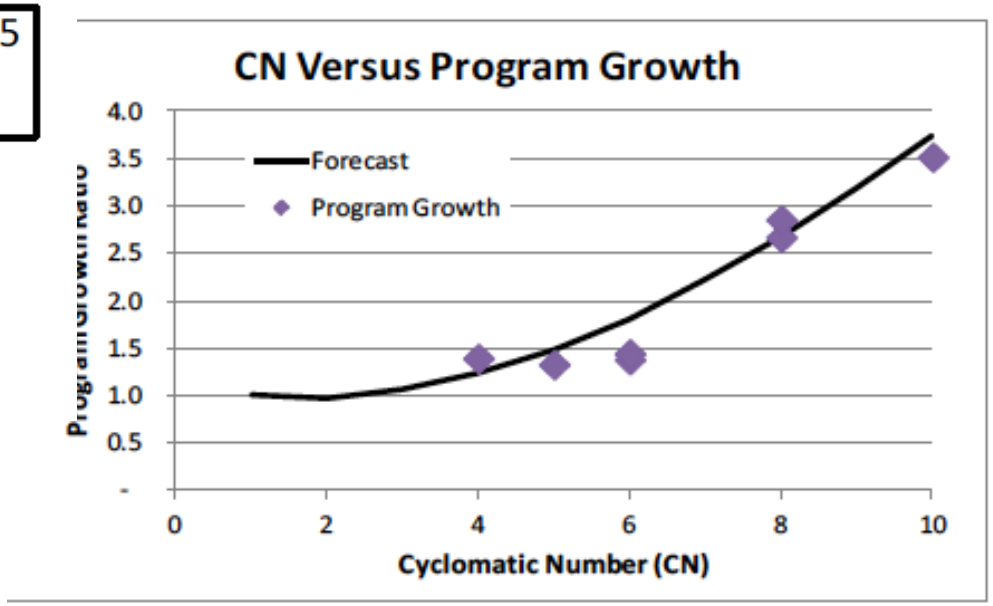

ure 13 - Program cyclomatic complexity vs growth

978-1-4577-0557-1/12/$26.00 ©2012 IEEE
IEEEAC paper #1330, Version 5, Updated November 21, 2011

Summary

- Cost estimating has changed since 2006
  - Estimation is now probabilistic
  - Explicit consideration of schedule and risks
- Demands on cost estimating have also changed
  - JCL analysis
  - Search for the best estimate has been replaced by how to best support budget setting
- Multiple estimates can enhance budgeting
  - Estimate consensus may indicate its resilience
  - Diversity may suggest a range of cost outcomes are possible and a need for more UFE
- Still looking for parametric cost models that link design characteristics and cost

Future Research in Cost Growth

- Compare CADRes (all parts) and estimates for historical programs
  - CADRes – actual historical trends in lifecycle cost
  - Decision memoranda—available estimates
- Are our set of estimates capturing the range of possible outcomes?
- Does the distribution of estimates early on map to budget changes, etc.?

Future Challenges

Federal Budgets

- Increasing budgetary uncertainty—Congressional direction, sequestration
- Decline in Federal budgets, number of new starts

Products

- Fragmentation of the space market
  - New low end: "Reliable microsats"
  - Disappearing mid-range (Discovery, New Frontiers)

Clients

- Increasing number of clients--international, commercial
- Increasing reliance on foreign partnerships—payloads, collaborative missions

Competition

- New commercial providers—e.g., launch services, human transport
- Reliance on commercial partnerships to control cost and reduce risks

If the key to cost estimating is historical data, the cost community will be challenged to continue the record of success

Backup Slides

Hamaker (2000): Voices from the Past

Names are NASA civil service individuals who formerly performed as cost analysts. Cost analyst is defined as a parametric or "grass roots" cost analyst, estimator or modeler. It does not include financial or program control analyst. The list also excludes contractor cost analysts, as well as current civil service cost analysts.

MSFC
Bill Huber
Terry Sharpe
Bill Rutledge
Walt Wood
O'Keefe Sullivan
Murray Castleman
Bob Rutherford
Herb Vaughan
Dave Taylor
Spencer Glasgow
Jerry Wheeler
Don Bishop
Dick Klan
Sam Sullins
Bill Hicks
Glenn Dodd
Steve Creech
Saroj Patel
Jack Housley
Rod Stewart
Keith Smith
Julie Martz
Cary Thompson
Allen Forney
Lowell Smith
George Mahoney
Cynthia Fry
Bill Powell

KSC
George Mosakowski
Walter Feitshans
Nick Talluto
Chris Winewicz
Joe Brown (C of F)

GSFC
Bill Mecca
Paul Villone
Werner Gruhl
Bernie Dixson
Don Strope
Mary Anne Gallager
Jerry Gonzales

JSC
Hum Mandell
Gil Chisholm
Richard Whitlock
Howard Ashley
Wayne Draper
Wayne Whitington
Howard Renfro
Ralph Shombery
Richard Fox
Phil Shanahan
Jim Wilcox

LeRC
George Novack
Marie Cassidy
Chris Beins
Tom LaCroix

NASA HQ
Tom Campbell
Mike Mann
Frank Rosenburg
Charlie Tulip
Mal Peterson
Jo Gunderson]
Dave Bates
Kristen Erickson
Logan Doane
Lisa Guerra
Andrew Hunter
Tony Schoenfelder
Tony Diamond
Henry Hertzfeld

JPL
Bill Ruhland
Stu Heller
Helmut Partma
Jerry Olivieri
Jeff Smith

LaRC
Joe Twigg
Ed Dean

ARC
Chuck Jackson
Sylvia Cox

Why Can't We All Just Get Along? (2006)

Because we're really not supposed to!

Since 2006 What Has Changed Analytically for NASA Centers

Schedule

- New methods, tools for probabilistic schedule analysis (PSA)
- Joint Confidence Level (JCL) analysis:: schedule + cost + risk

Cost

- Acceptance of cost estimates as probabilistic analysis (S-curves)
- Appearance of new datasets –
  - 'Public' datasets: CADRe (time series), NICM
  - Center-specific earned value (EV) and other 'micro' datasets

ICEs

- Fewer independent cost models
  - IPAO uses project office products (ICEs, JCL)
  - No requirement for project office ICE at KDP C
- Project office KDP-C effort now directed toward JCL analysis

NPR 7120.5 Revision E:
Using Analytics to Ensure Sufficient Funding

- Funding guidance
  - Projects funded to at least 50th percentile
  - HQ holds UFE to cover to 70th percentile*
- Inherent uncertainty in estimated cost
  - KDP B: cost ranges
  - KDP C: JCL-derived S-curve
- Assessment of cost, schedule & risks
  - Joint Confidence Level (KDP C) requirement

*Other Federal agencies may fund to the 80th percentile

One Strategy to Exploit Multiple Cost Estimates: "The Wisdom of the Crowd"*

- *"the process of taking into account the collective opinion of a group of individuals rather than a single expert to answer a question"*
- Statistician Frances Galton's example based on his experiences at a 1906 English country fair...

Surowiecki, James. *The Wisdom of Crowds: Why the Many Are Smarter Than the Few and How Collective Wisdom Shapes Business, Economies, Societies and Nations.* Doubleday, 2004. ISBN 978-0-385-50386-0.

Galton's Example

- 800 people participated in a contest to estimate the weight of a slaughtered and dressed ox
- True weight:1198 pounds
- Median guess:1207 pounds (within 1%)
- Galton concluded that
  - The 'mean' of group observations appears to be an unbiased estimate
  - Crowds do not have to be uniform
  - The larger the crowd, the better

Limits on The Utility of 'Crowd Estimation' for Setting Budgets

Two challenges:

- Not enough data points to filter out 'noise'
- Researchers are finding that crowd techniques are useful for determining 'facts'; less effective at 'prediction'

The El Farol Problem (Arthur, 1994): (Crowds and Predicting the Future)

W. Brian Arthur's Problem

- Every Thursday night, a finite population (including Arthur) wants to go to Santa Fe's El Farol Bar
- The El Farol is quite small, and it's no fun to go there if it's too crowded:
  - <60% = a good time
  - >60% = a bad time
- Everyone must decide by themselves late Thursday afternoon whether they will go to the bar or not.

"If I know the historical trend in El Farol attendance, do I go to the bar this Thursday or stay home?"

The El Farol Problem (Arthur: 1994)

Brian Arthur's observations:

- Even if there is perfect knowledge about past attendance, if everyone uses the same "pure strategy", it is <u>guaranteed to fail</u>.
  - Example:
    - If attendance has increased for the last 3 weeks AND
    - Last week's attendance > 55% , THEN
    - Skip El Farol this week
  - But if everyone shares the strategy,
    - Nobody goes to El Farol AND
    - The bar is not crowded (& perfect)
- Success requires "mixed strategies"
  - Probability attached to pure strategy OR
  - Multiple pure strategies, each assigned a probability OR
  - BOTH

- Successful prediction involves exact knowledge of:
  - Past performance
  - Strategies
  - Probabilities assigned to each
  - Fact that strategies, probabilities can change

Budget Setting and ‘El Farol’

- Final cost, like attendance, are outcomes of a complex, dynamic, non-linear, feedback system
- Outcomes are the result of initial conditions, strategies and the probabilities associated with their employment
- While outcomes can vary wildly, they tend to fall within one or more relatively narrow ranges (‘attractors’)
- It is valuable for budgeting to understand:
  - How many ranges are possible
  - The characteristics of each