# Crew-assisted Mars Sample Return Study (an interim status report)

Bob Gershman, Scott Howe, JPL

Stan Love, NASA-JSC

Josh Hopkins, Mike Drever, Jim Keller, Lockheed Martin


11 April 2014


Pre-decisional. For planning and discussion only

Copyright 2014. All rights reserved.

# Presentation Outline

- Background: robotic missions and sample containment requirements
- Options for crew assist - focus on first MSR
- Details of two scenarios investigated to date
- Benefits and risks of crew-assist
- Perspective of crew and Orion representatives

# Introduction

- Mars Sample Return (MSR) is a top priority for planetary science.
- Sample containment is a significant challenge for implementing MSR.
- Crew participation as envisioned in the GER could mitigate some of the existing sample containment concerns, but could add new ones.
- Samples handed-off from robotic return vehicle to crew in lunar vicinity
  - Could provide a significant level of redundancy in meeting sample containment requirements.
  - Would replace a new Earth entry system with a proven one (Orion)

# Background

- Mars Sample Return (MSR) has been designated as highest priority among flagship planetary science mission options by the U.S. National Research Council Decadal Survey (2011) and reinforced by recent findings
  - Definitive identification of biosignatures from Mars would most likely be possible only with returned samples
  - Precise age-dating not possible in situ
  - Allows analyses into the future, by instruments not yet developed and in response to science questions not yet formulated
  - All Mars meteorites here on Earth are igneous in origin and have been heavily processed by exposure to space environment and Earth atmosphere entry
- We've been working on MSR concepts for a long time
  - 1978-1984: Pre-formulation studies by JPL and JSC
  - 1987-89, MRSR: joint JPL/JSC pre-project
  - 1998-2000, MSR 03/05: joint NASA/CNES project
  - 2000-01, joint JSC/JPL studies, including concept for SEP-based delivery to STS (All other studies assumed direct Earth entry)
  - 2010-2012, joint NASA/ESA pre-project

# Background (continued)

- Mars Sample Return Mission efforts have been impeded by several major technical challenges, including:
  - Launching the samples from the surface of Mars
  - Rendezvousing with and capturing the sample container in Mars orbit
  - Providing robust sample containment (also called "backwards planetary protection")
  - Providing a robust Earth entry/descent/landing capability consistent with the sample containment requirements

- Crew involvement provides a potential new avenue to respond to the latter two of these challenges.

# Sample Containment

- Top level American and European science panels have considered the risk to the Earth's biosphere represented by Mars sample return. Conclusions:
  - The risk is very low but **"not zero"**.
  - "Samples returned from Mars by spacecraft should be **contained and treated as though potentially hazardous until proven otherwise**. No uncontained martian materials, including spacecraft surfaces that have been exposed to the martian environment, should be returned to Earth unless sterilized."
- This has been translated into NASA procedural requirements (NPR 8020.12)
  - "The highest degree of concern is expressed by the prohibition of destructive impact upon return, the need for **containment throughout the return phase** of all returned hardware which directly contacted the target body and/**or** any unsterilized material from the body, and the need for containment of any unsterilized sample collected and returned to Earth."
  - "The mission and the spacecraft design shall provide a method to **"break the chain of contact" (BTC)** with Mars. No uncontained hardware that contacted Mars, directly or indirectly, may be returned to Earth unless sterilized."
- The NASA Planetary Protection Officer has provided a draft "containment assurance" requirement for the first MSR mission (our focus here):
  - **$<10^{-6}$ probability of inadvertent release of a single Mars particle to the Earth's biosphere**

# Four-element Robotic MSR Campaign Concept

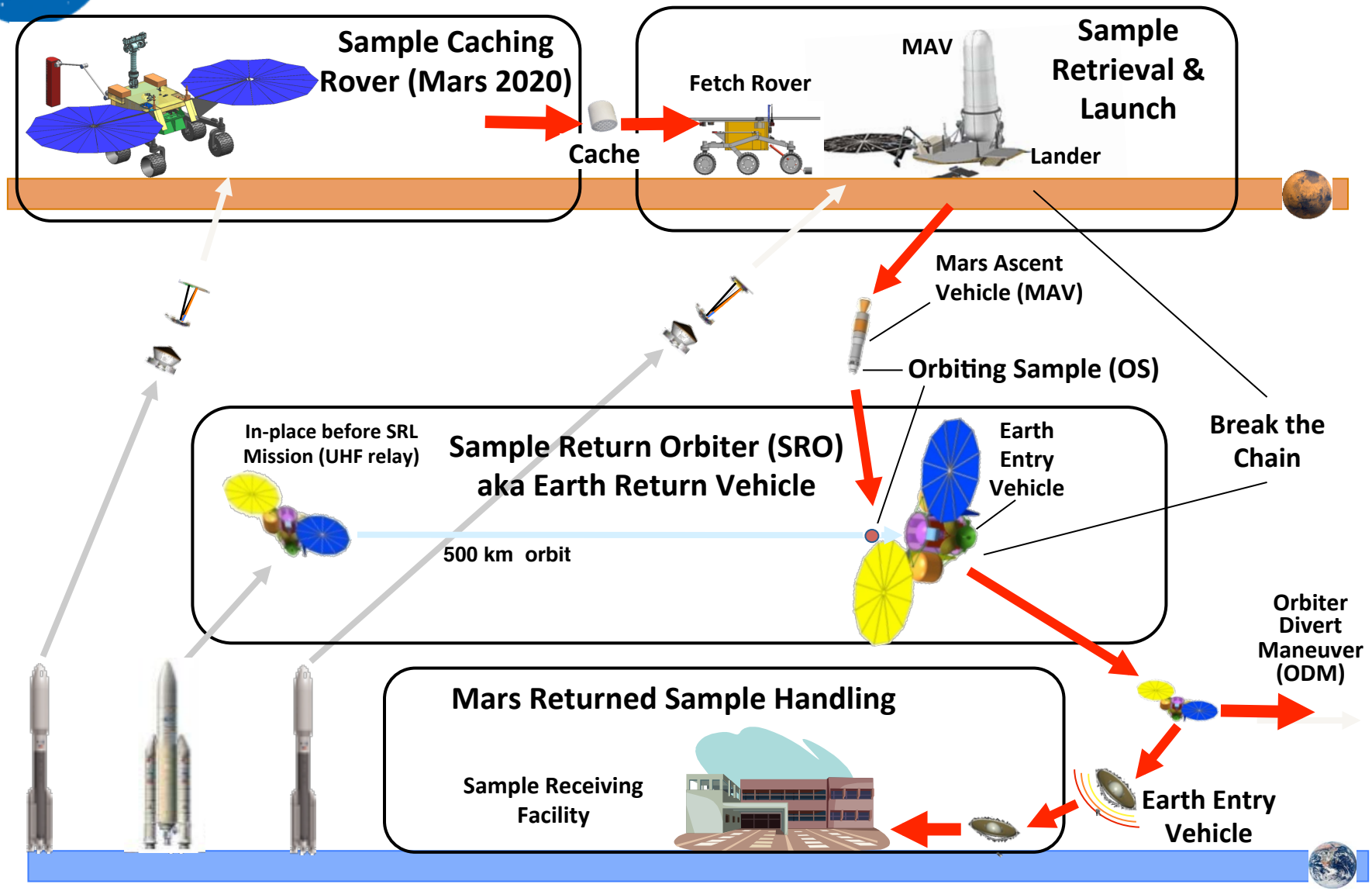

# ESA Clean Capture Concept (Onboard SRO)

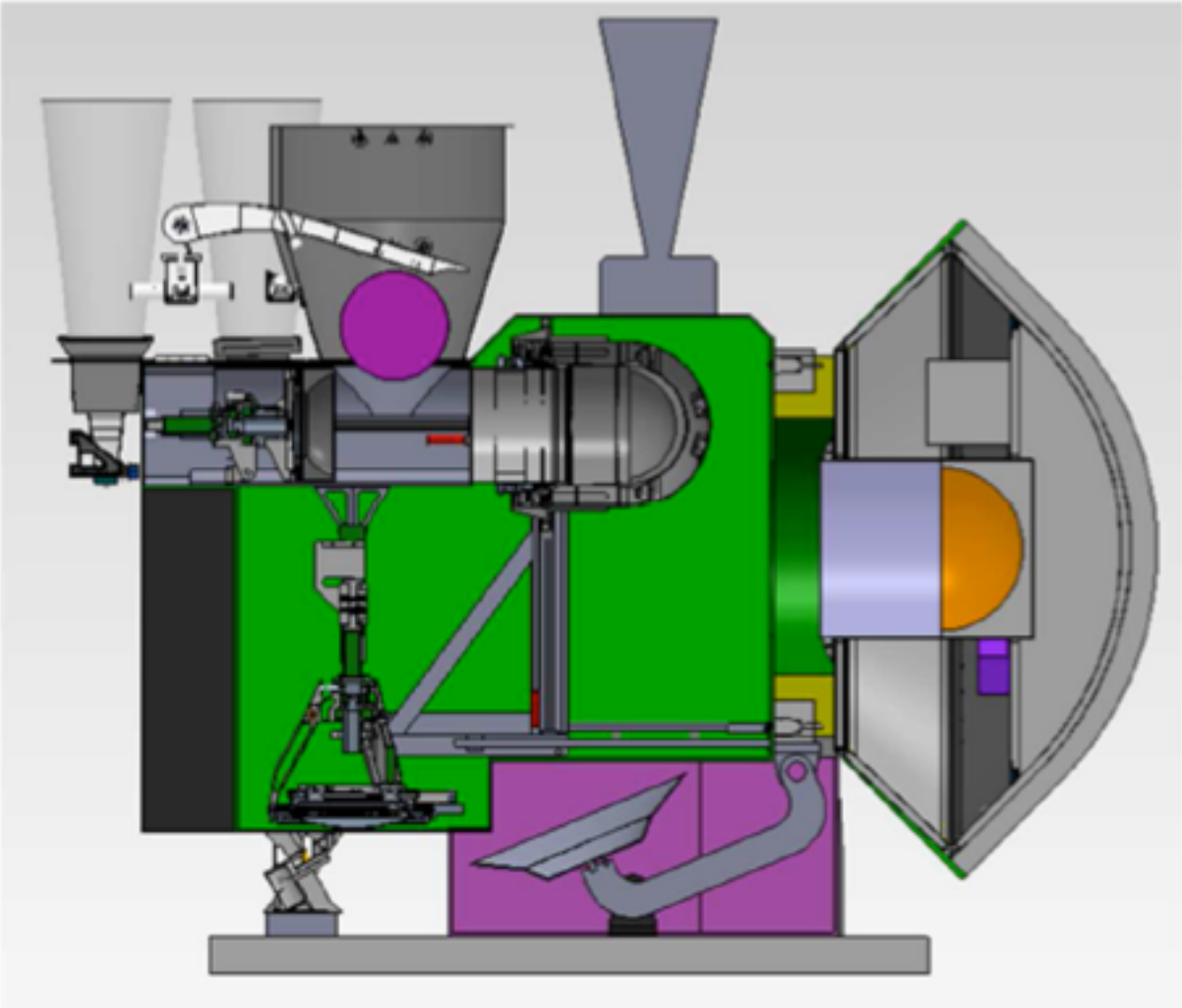

# Crew-assisted Concept Origins

- Mars Program Planning Group (MPPG)
  - NASA Joint Study by SMD, HEOMD and STMD NASA Mission Directorates in 2012
  - Several new mission concepts for sample return discussed at the MPPG Workshop in June 2012.
  - Three concepts suggested returning samples to trans-lunar space for subsequent delivery to Earth by human or robotic missions
    - Subsequent studies recommended Lunar distant retrograde orbit (DRO): very stable and within the performance capability of SLS/ Orion.
  - This approach deals with key planetary protection concerns
    - Crew inspection and encapsulation of sample containment prior to Earth return
    - Crew entry system eliminates need for robotic Earth entry vehicle
- NASA agreed that a follow on study should be done to evaluate the best options for such a mission

# Crew-assisted Mars Sample Return Study Objectives

- Define one or more end-to-end concepts for returning Mars samples from Mars orbit to Earth via transfer to crewed Orion in lunar orbit
- Assess the concept(s) in terms of
  - Sample Return Orbiter (SRO) mass and development
  - SRO operational complexity
  - Orion mass increase and new developments
  - Orion operational complexity
  - Likelihood of satisfying MSR containment assurance requirements
  - Likelihood of mission success
- Outline benefits of lunar farside sample return via crewed Orion as precursor
- Provide recommendations for follow-on work

# Mission Architecture
# Study Assumptions

- Breaking the chain (BTC) will have been completed upon leaving Mars orbit.
- Orbiting Sample (OS) delivered to lunar DRO by the Sample Return Orbiter (SRO)
- OS remains with SRO until crew arrival
- The handoff to Orion will be designed to provide additional BTC redundancy considering situations where
  - Incomplete BTC at Mars was not recognized
  - BTC was compromised during Mars-Earth transit
- No depressurization of Orion
- OS brought to Earth by Orion

# Options Being Considered

- Two key scenarios for sample capture are being presented
  - Scenario 1: Orbiting Sample (OS) released by SRO
    - Catch OS using capture cone mounted on Orion
    - Catch OS using robotic arm on Orion (not presented)
  - Scenario 2: Orion Dock with the SRO and mechanically transfer the OS
- Stowage options for entry
  - OS brought inside Orion via airlock mounted on forward hatch and stowed in internal vault
  - OS stowed in external vault (not presented)

# What is a Lunar DRO

- Stable for long periods >100's of years (300 days shown here)
- Both the Earth's and the Moon's gravity stabilize the orbit and make it resistant to perturbations
- Although the DRO motion varies with time, it is bounded and will not leave the Moon's vicinity or impact

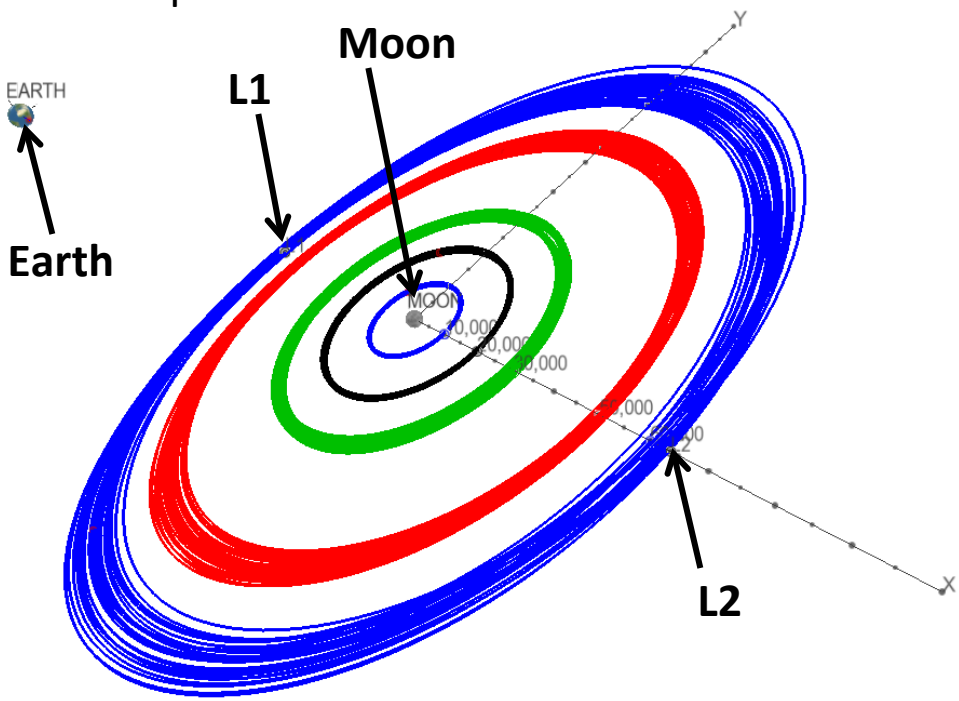


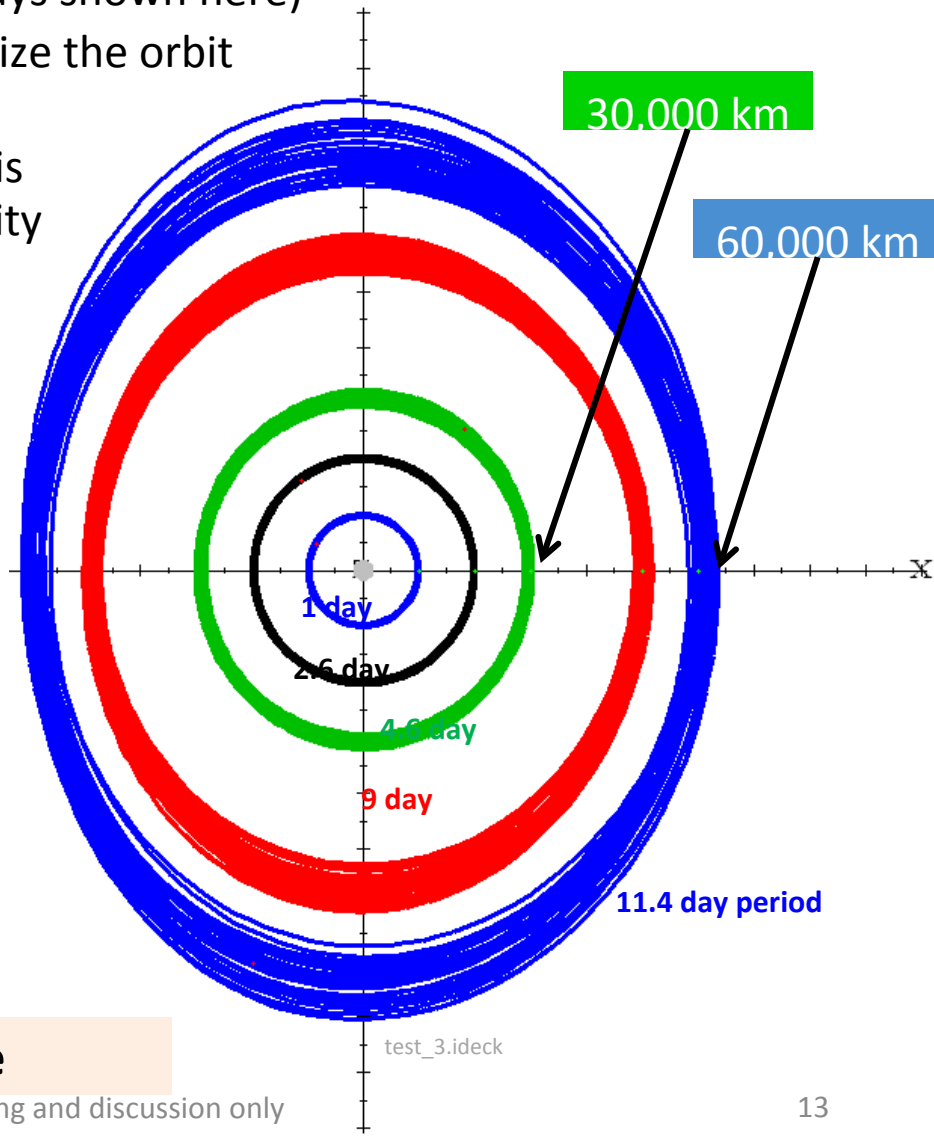


**Earth-Moon Rotating Frame**

# Mars Sample Return to Lunar DRO

- Interplanetary return leg:30-33 months to get a 1.5 km/s Earth return $V_{infinity}$
- Endgame phase uses lunar flyby and solar perturbations to set up DRO insertion
- DRO Insertion phase uses low-thrust to spiral down into a stable DRO storage orbit
- **55-60 m/s** total DV (30 m/s Endgame, 25-30 m/s DRO insertion)
- 225-325 days Flight Time (125 days Endgame, 100-200 days DRO insertion)

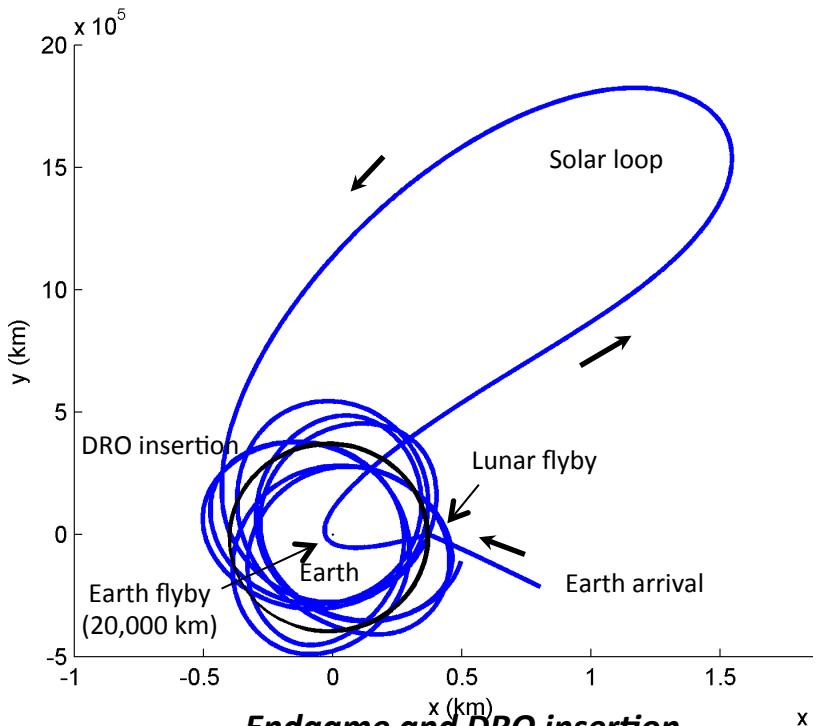


***Endgame and DRO insertion (Earth-centered inertial frame)***

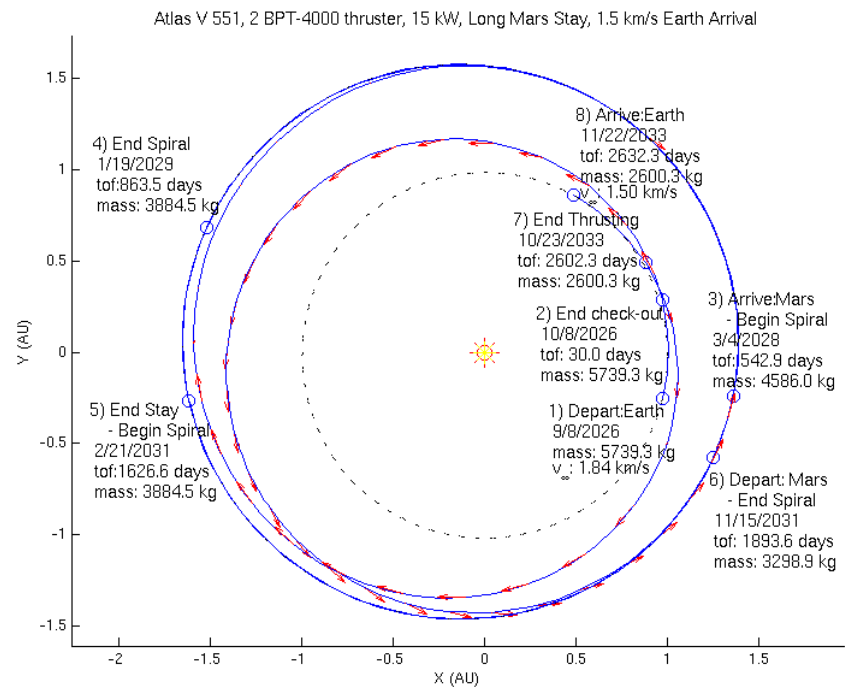


***Interplanetary trajectory (Sun-centered inertial frame)***

Pre-decisional. For planning and discussion only

# Concept of Operations
(both scenarios)

- At Mars
  - OS launched to low Mars orbit
  - SRO captures and stows OS
  - BTC is accomplished either by launching a clean OS or by cleanly capturing a dirty OS and encapsulating
- One year transit to lunar DRO
  - Includes 20,000 km distant Earth flyby (working on eliminating need)
- Orion launched to DRO after SRO arrival
- At DRO (see detailed slides for each scenario)
- Return to Earth
  - No change from Orion baseline
- Contingency: Orion launch delayed beyond SRO lifetime
  - OS released, need solar powered beacon

# Study Scenario 1

- SRO delivers OS to DRO.
- SRO assists tracking and rendezvous by Orion and releases OS when Orion has it in sight at a standoff distance of 1-2 km.
- Orion captures OS, provides a redundant layer of containment, and stores it in an internal vault for entry.

# Scenario 1 Conops at DRO

- Location and approach
  - Nav aids on SRO assist location by Orion
  - OS released when the crew can see SRO clearly (delta V < TBD, rotation < TBD)
  - Orbital mechanics effects are trivial on the timescale of a human-piloted rendezvous
  - Constant full sunlight, approach trajectory shaped to keep the sun out of the pilot's eyes
  - Orion deploys dust shield (completely or partially transparent)
  - Pilot uses LIDAR or other intermediate-range navigational aids to maneuver close to OS
  - Crew inspects OS for meteoroid damage
- Capture
  - Sample vault is mounted inside an airlock on the front of Orion with a centerline camera that feeds video to the pilot's primary display for capture
  - Closure speed ~3 cm/sec (~ ISS)
  - Mechanisms guide the OS into the vault and hold it in place
  - Mechanisms hermetically seal the vault lid, close the airlock outer door, and separate the vault
- Ingress and stowage
  - Airlock is pressurized and crew monitors pressure in vault for leakage in
  - Crew opens airlock inner door and removes vault
  - Crew stows vault for entry
  - Airlock and dust shield are discarded, remaining in the stable DRO

# OS Captured by SRO in Mars Orbit

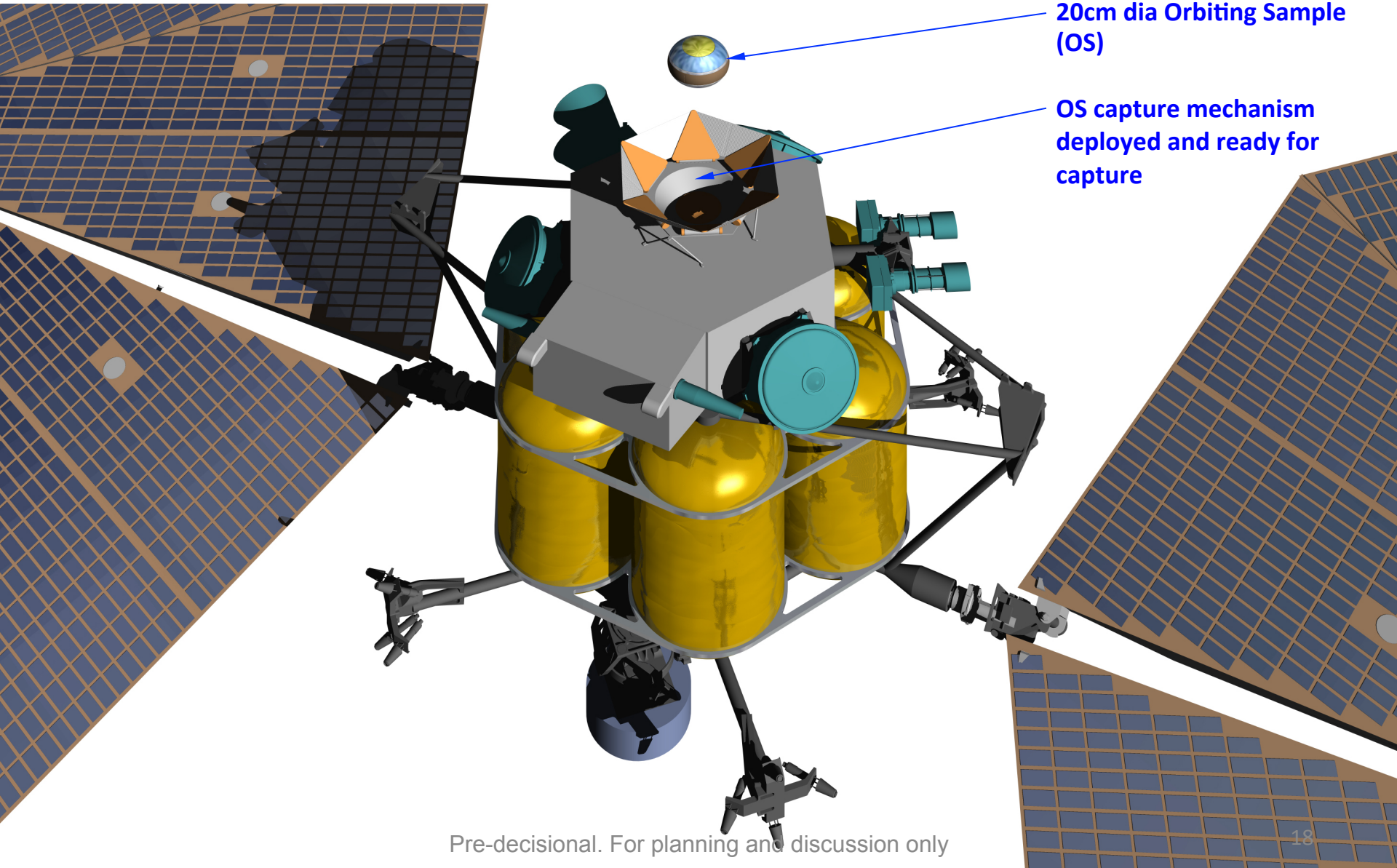

# Orion Sample Capture and Return (OSCAR)

Courtesy of Lockheed Martin

Orion Sample Capture and Return (OSCAR) module is a small sample-transfer airlock which could be launched in place of the Orion docking system

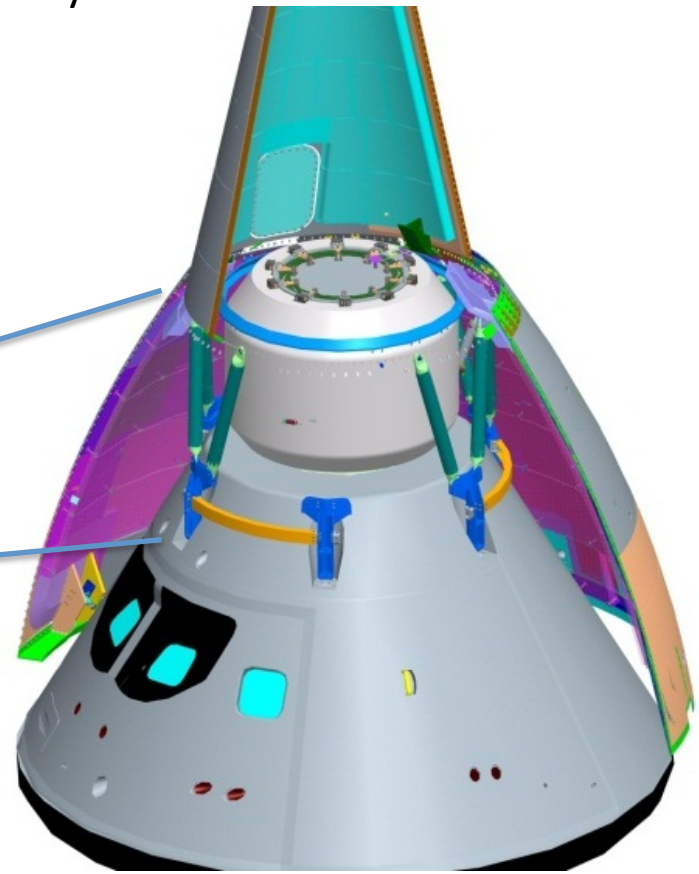

# Orion with Dust Shield Deployed

Courtesy of Lockheed Martin

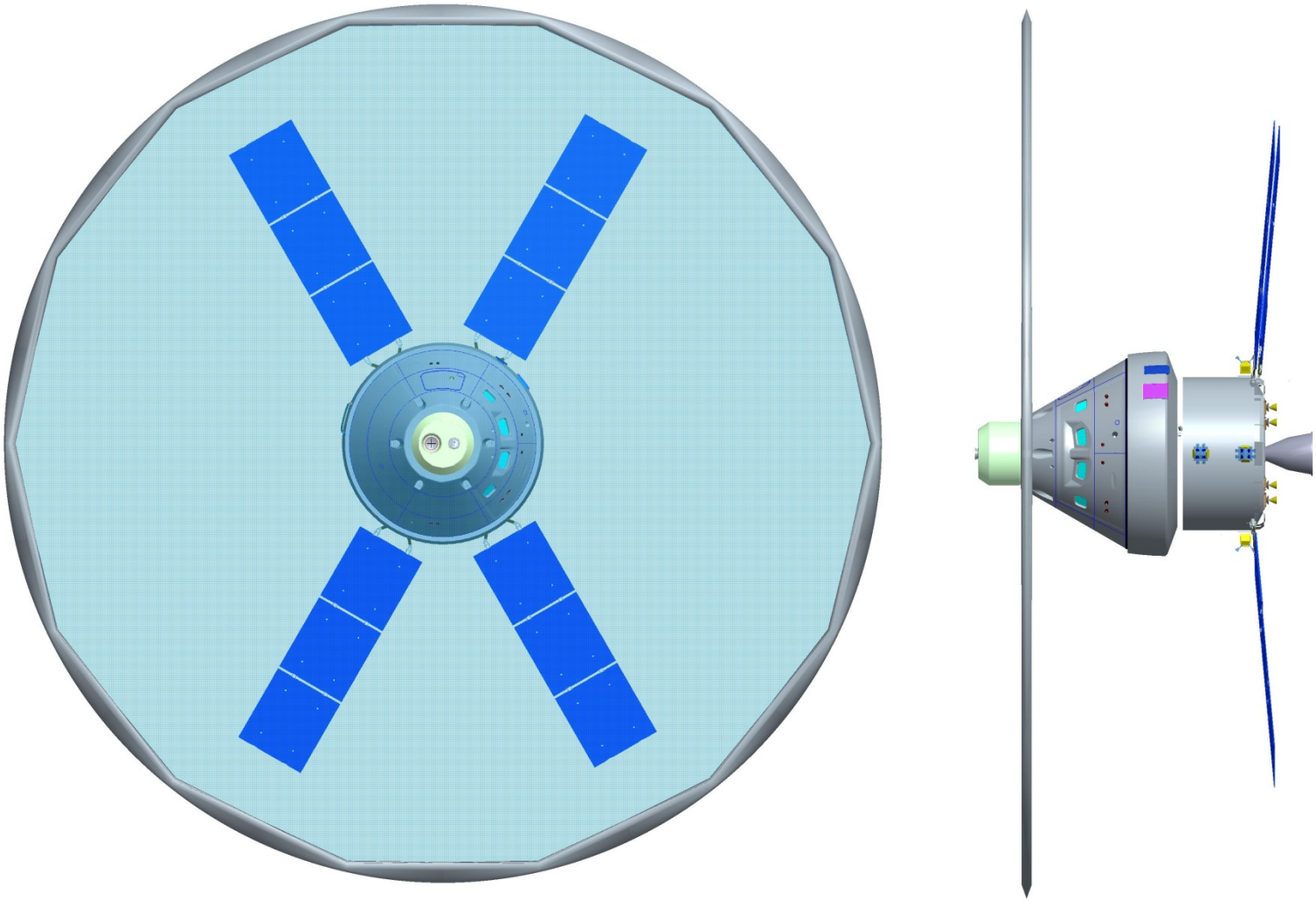

Inflatable torus supports transparent or translucent membrane shield sized to be larger than the solar arrays

# OS Approach

Courtesy of Lockheed Martin

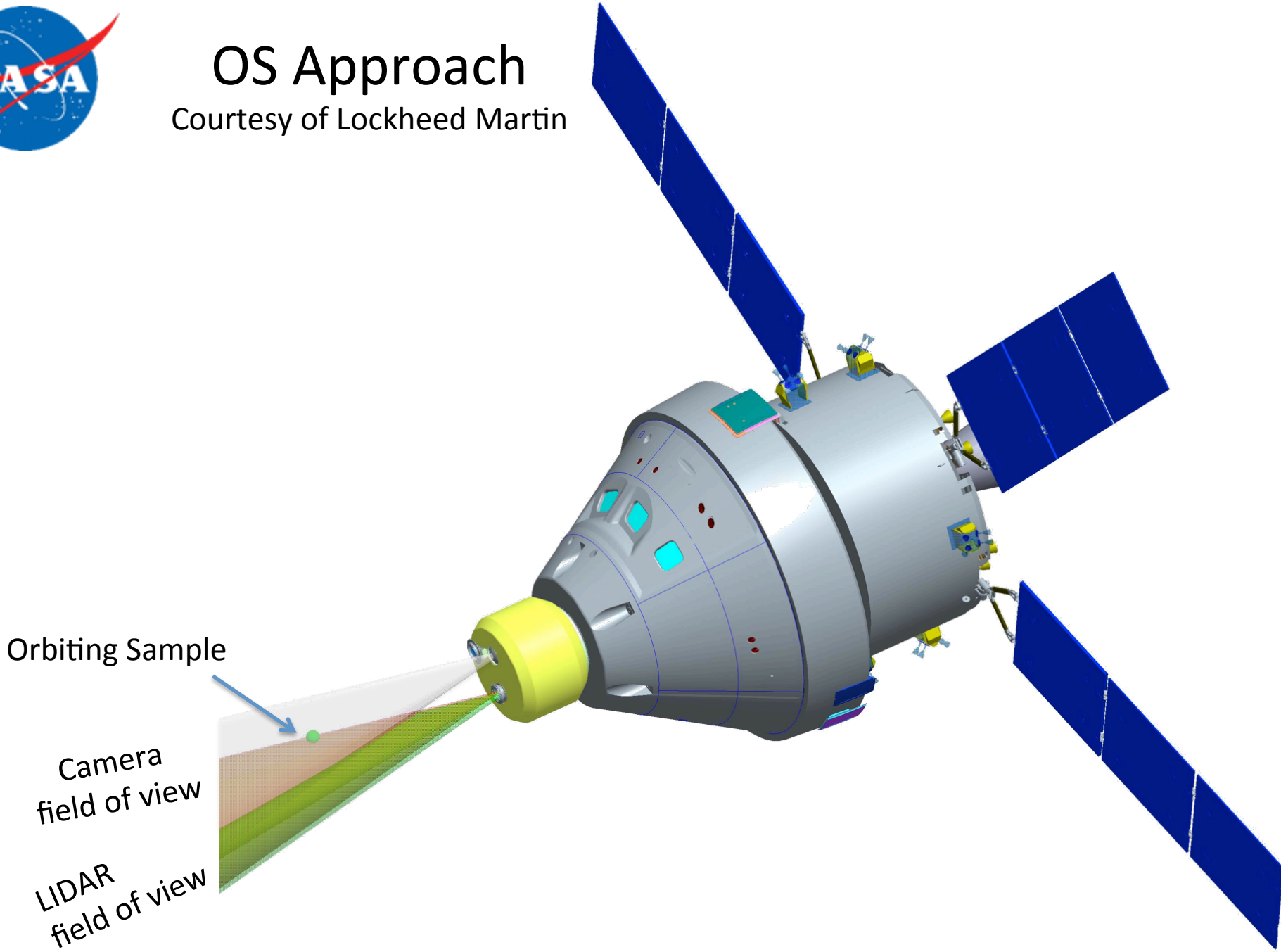

# OSCAR Cross Section for Mars Sample Return

Courtesy of Lockheed Martin

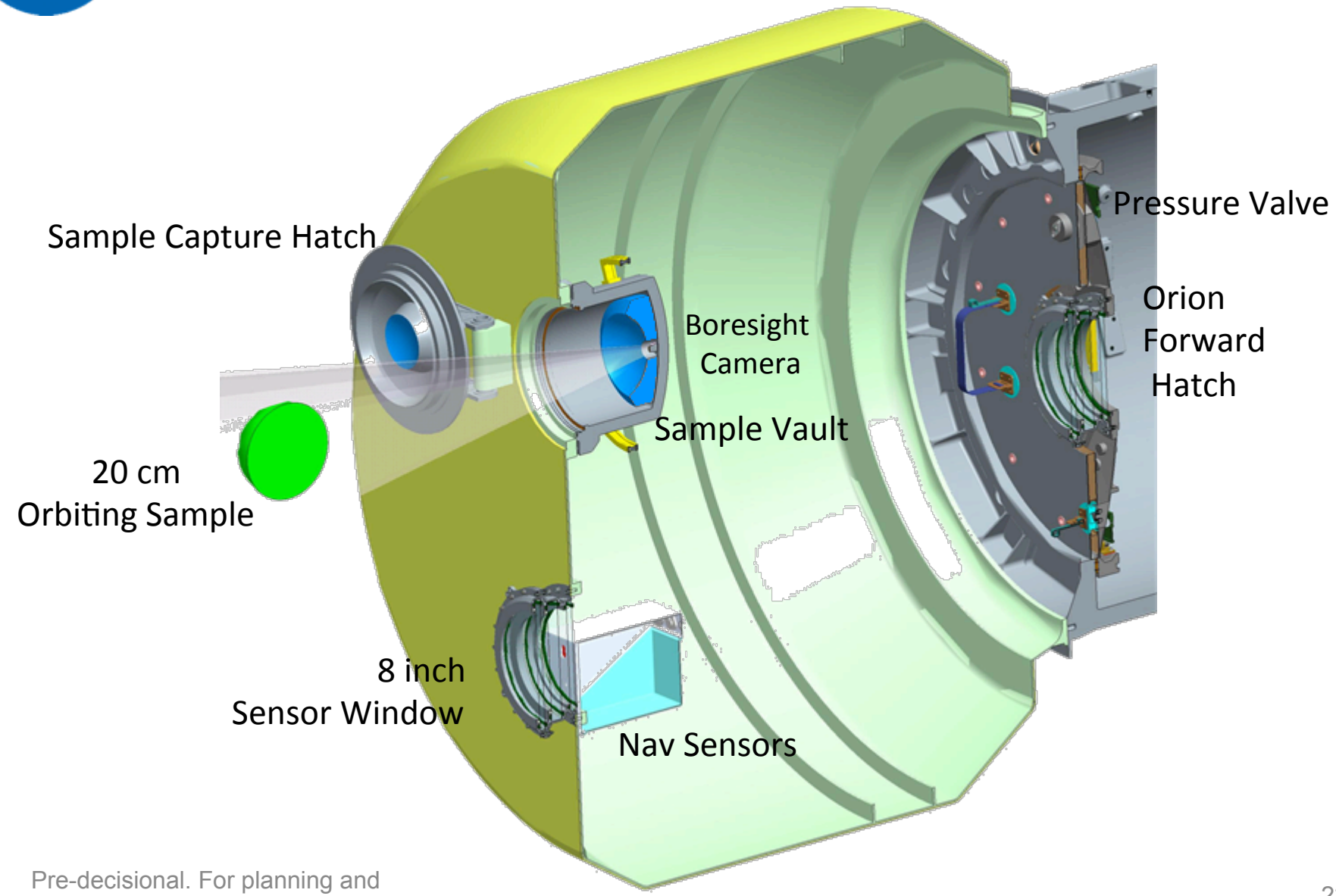


Pre-decisional. For planning and discussion only

# Capture Process

Courtesy of Lockheed Martin

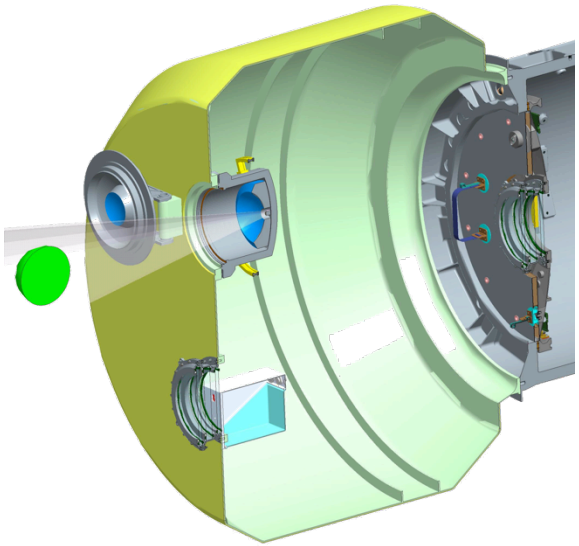

Pilot approaches sample using boresight camera inside vault for terminal guidance

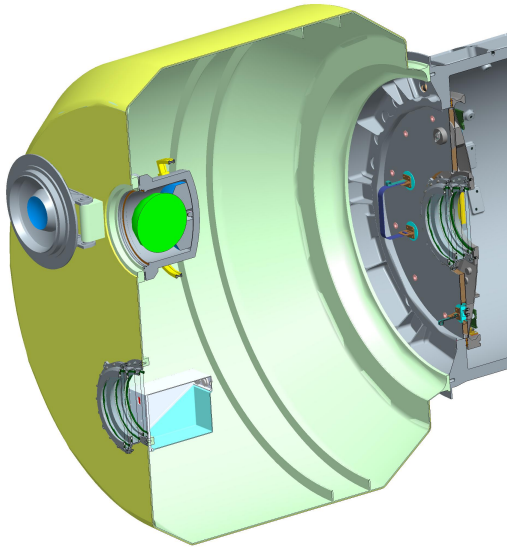

Capture sample

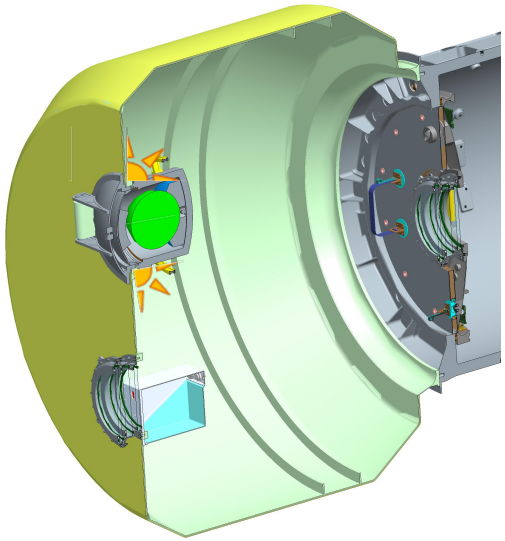

Close double-layer lid.

Seal inner lid seal onto sample vault by exothermic welding or brazing

# Capture Process (continued)

Courtesy of Lockheed Martin

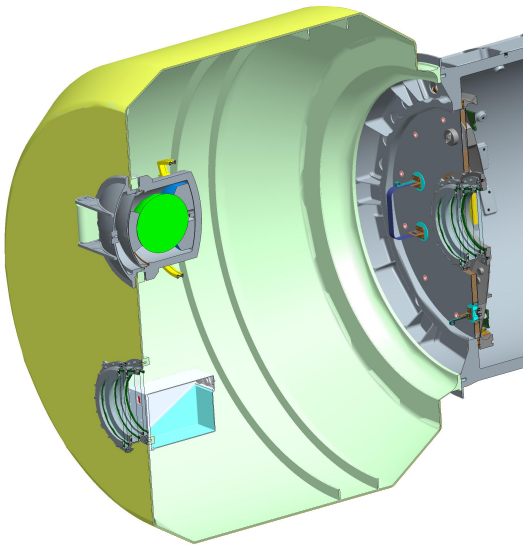

Repressurize OSCAR module. Pressure transducer inside vault verifies sample vault is sealed if it holds vacuum.

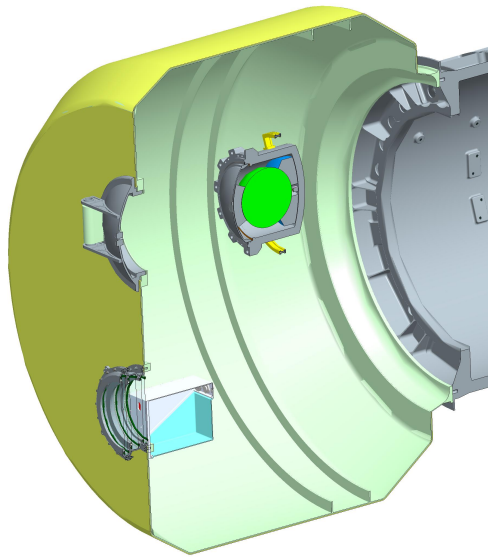

Open Orion hatch. Transfer vault to Orion.

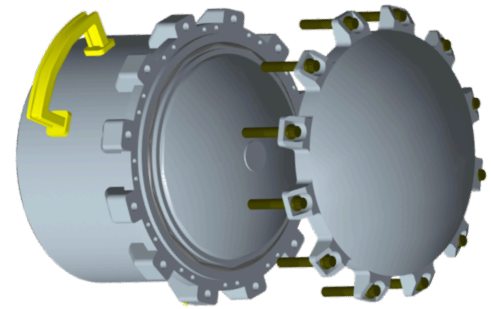

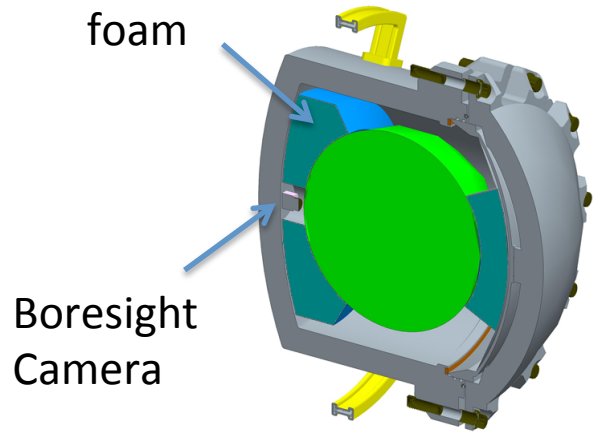


In the event of failed reentry or recovery, vault walls are sized to contain sample 15,000 ft deep on seabed

# Stowing Sample Vault

Courtesy of Lockheed Martin

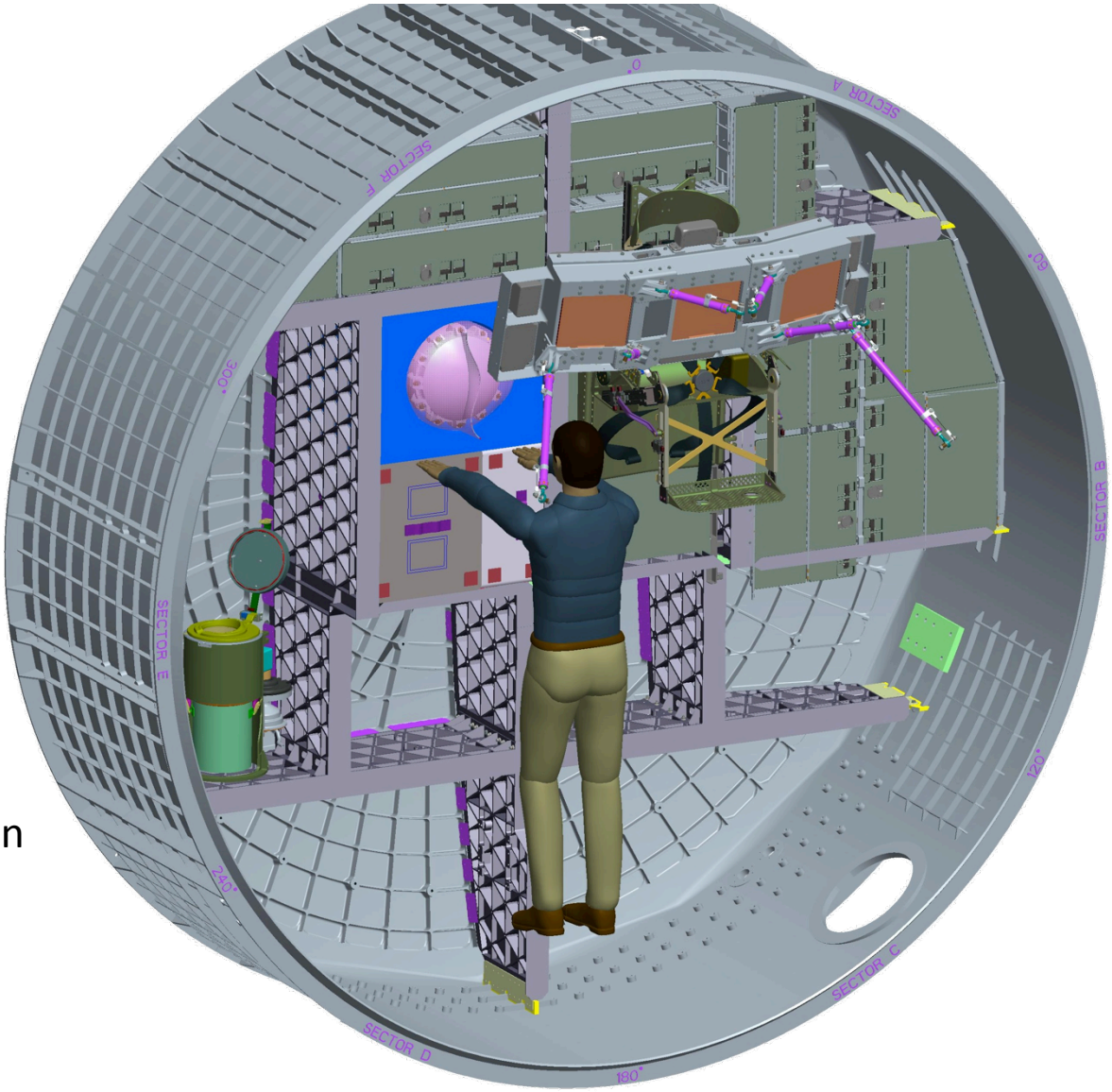


Sample vault is stowed in Bay D or E of the Orion backplane behind the crew seats.

# Study Scenario 2

- SRO delivers OS to DRO
- SRO assists location by Orion
- Orion docks with SRO
- Orion provides a redundant layer of containment while transferring OS to an internal vault for entry, and then releasing SRO

# Scenario 2 Conops at DRO

- Location and approach
  - Nav aids on SRO assist location by Orion
  - Orbital mechanics effects are trivial on the timescale of a human-piloted rendezvous
  - Constant full sunlight, approach trajectory shaped to keep the sun out of the pilot's eyes
  - Orion deploys dust shield (completely or partially transparent)
  - Pilot uses LIDAR or other intermediate-range navigational aids to maneuver close to OS
  - Crew inspects SRO for meteoroid damage
- Docking and OS transfer
  - Closure speed ~3 cm/sec (~ ISS)
  - Orion docks with SRO using ISS-heritage grapple system
  - Mechanisms guide the OS into the vault and hold it in place
  - Mechanisms hermetically seal the vault lid, close the airlock outer door, and separate the vault
- Ingress and stowage
  - Airlock is pressurized and crew monitors pressure in vault for leakage in
  - Crew opens airlock inner door and removes vault
  - Crew stows vault for entry
  - SRO + dust shield + airlock released as a unit, remaining in the stable DRO

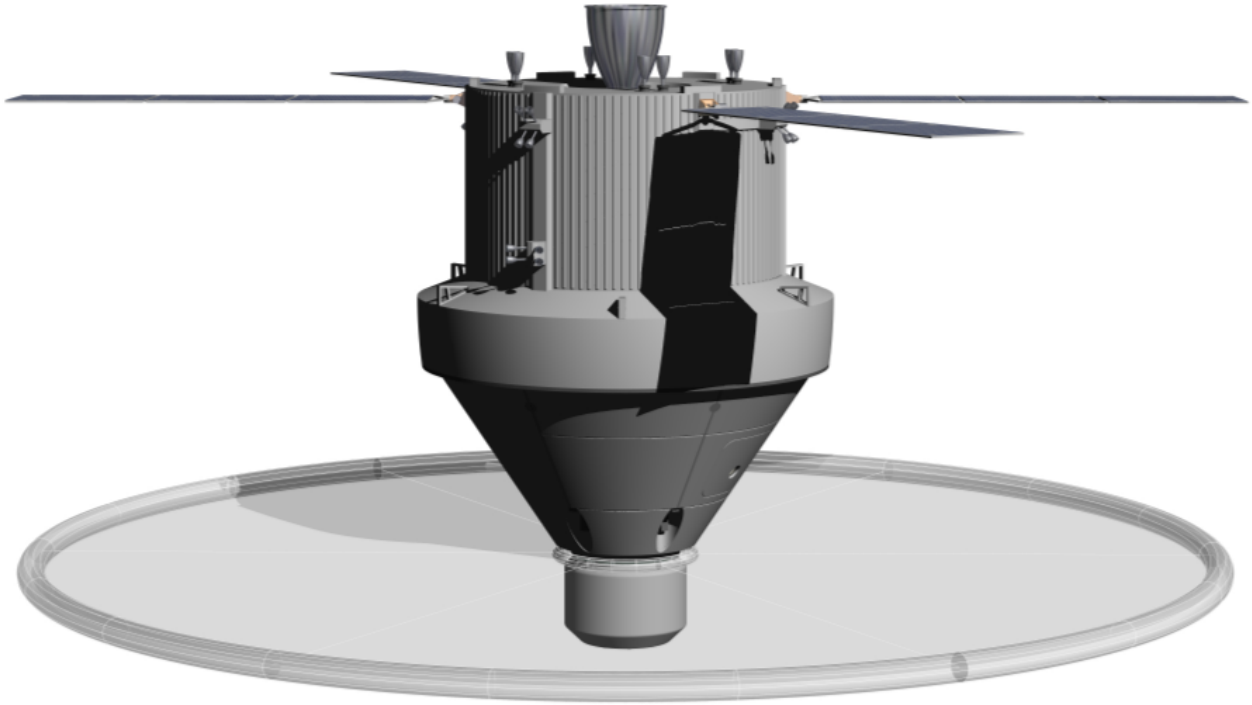

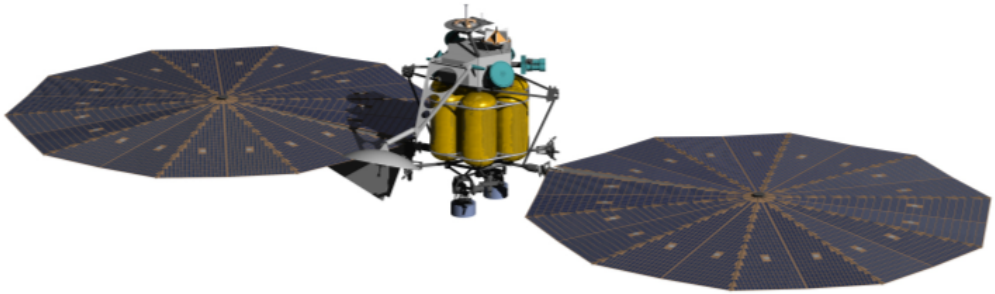

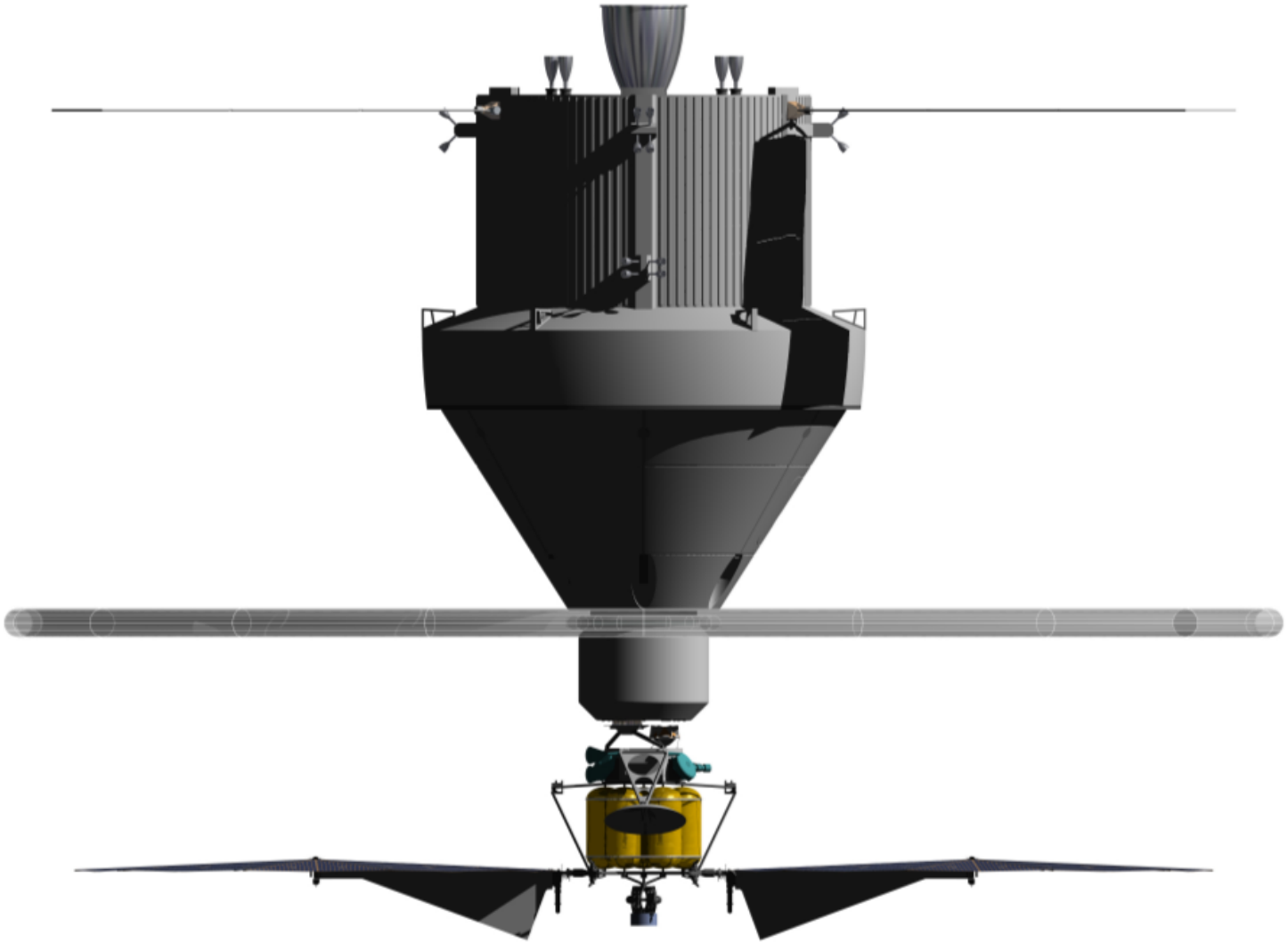

# Scenario 2 Grapple Docking

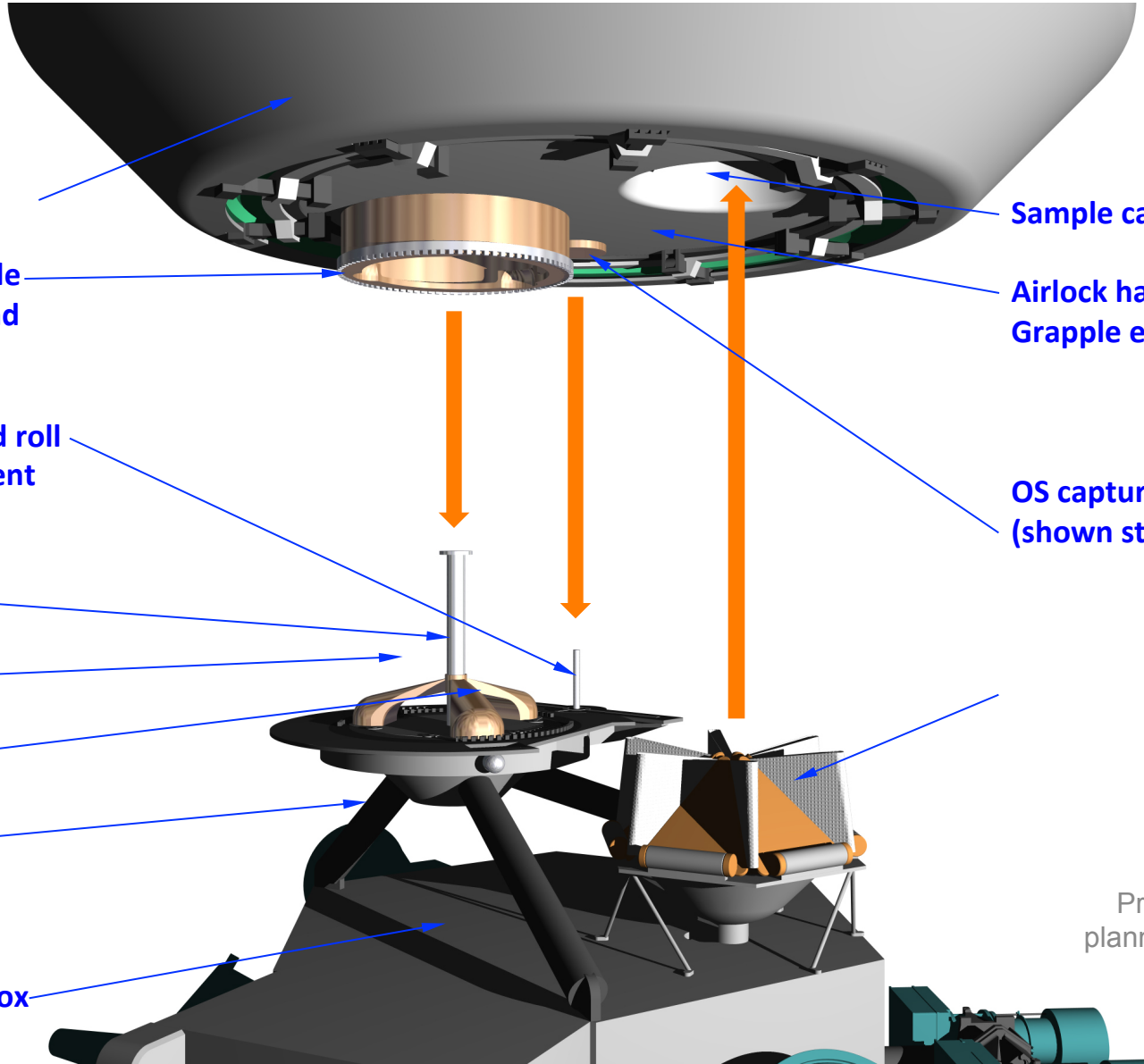


Pre-decisional. For planning and discussion only

# Scenario 2 Grapple Docking

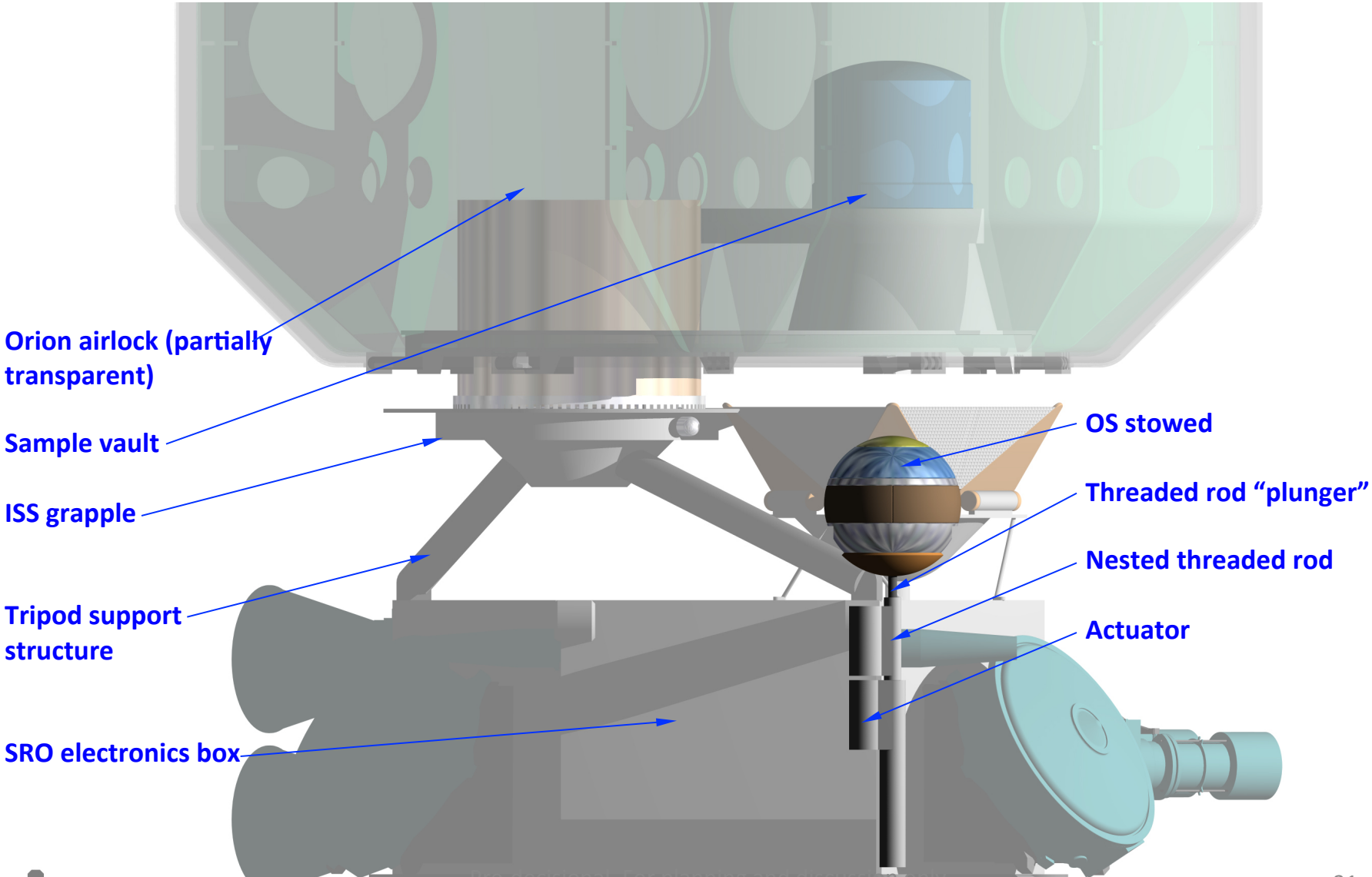


Pre-decisional: For planning and discussion only

# Scenario 2 OS Transfer

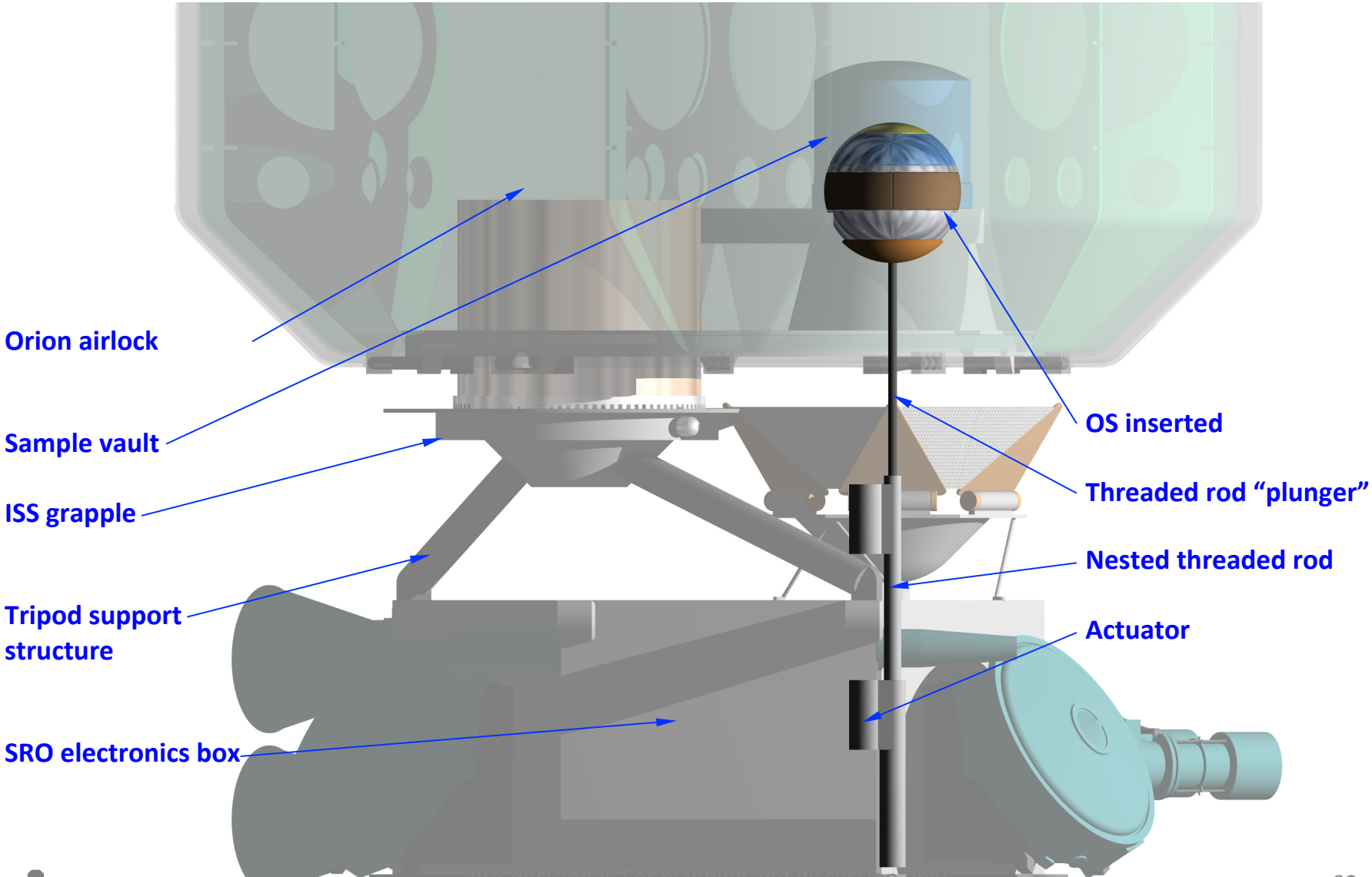


Pre-decisional: For planning and discussion only

# Robotic Mission Impacts

- Deliver to lunar DRO instead of Earth entry
  - No EEV
    - Save 50 kg
    - Save ~$100M in development
  - Negligible increase in propellant for trajectory with distant Earth flyby
  - TBD propellant to avoid Earth flyby

# Orion Impacts

- Airlock/Capture/BTC system
  - Mass:  500 kg
  - Substantial development
  - Airlock may have other uses
- Dust shield may be needed to avoid Mars dust migration from SRO to Orion
  - Need to mitigate thruster plume impingement on the shield
    - Set up approach far out at desired relative velocity, or
    - Shallow-canted thruster (new requirement on Orion)
  - Need to investigate disposal options
- Planetary protection approval process
  - Extensive risk analysis
  - Breaking new procedural ground
- Operations
  - Rendezvous & docking compatible with existing techniques

# Sample Containment Assurance

Does Crew-Assisted (CA) concept help mitigate concerns?

| Function or Issue | Benefit for CA Concept | Added Risk for CA Concept |
|---|---|---|
| Earth entry, descent, landing | Need to compare robustness of Orion/vault/water landing with EEV/ sample container/inland landing | |
| External contamination of systems returning to Earth | | CA could have more exposure (if BTC at Mars unsuccessful) |
| Orion internal contamination | | Any crew illness could require crew quarantine |
| MMOD | CA provides additional protection of sample container and short exposure of Earth entry system | |
| Sample capture and BTC | CA provides robust redundant system and opportunities for crew intervention | |
| Accidental SRO Earth impact with samples onboard | | CA may have higher probability. (Working on a trajectory biased away from Earth throughout) |
| Unknown issues | Crew-in-loop may help fix | |

# Sample Return Mission Success

## Does crew-assisted concept (CA) help mitigate concerns?

| Function or Issue | Benefit for CA Concept | Added Risk for CA Concept |
|---|---|---|
| Earth entry, descent, landing | Need to compare robustness of Orion/vault/water landing with EEV/ sample container/inland landing | |
| Sample capture and BTC | CA provides robust redundant system and opportunities for crew intervention | |
| Spacecraft problems | CA eliminates critical sequence risk for EEV release | CA adds risk of wave-off prior to capture due to Orion anomaly |
| MMOD | CA has much shorter exposure | |
| Unknown issues | Crew-in-loop may help fix | |

# Lunar Sample Return as Precursor

- A crew-assisted lunar sample return mission can help to alleviate containment assurance concerns:
  - Demonstrate BTC system and operations.
  - Demonstrate that containment is maintained through return to Earth.

# Preliminary Observations

- Both crew-assisted scenarios appear feasible
- Provides substantial simplification & cost savings for the Sample Return Orbiter (no Earth Entry Vehicle)
- While the study is not complete, the Orion water landing presents additional challenges for sample containment.
- However, the Crew-assisted mission presents benefits to deal with unknowns and could provide additional containment assurance.
- Additionally, the OSCAR may have other applications for Orion crew missions.