Launch Readiness Review (LRR) Document

WV SPACE

Mission: To embark on a collaborative effort with academic institutions across the state of West Virginia for development of knowledge and practical experience in designing, building, launching, and operating space payloads.

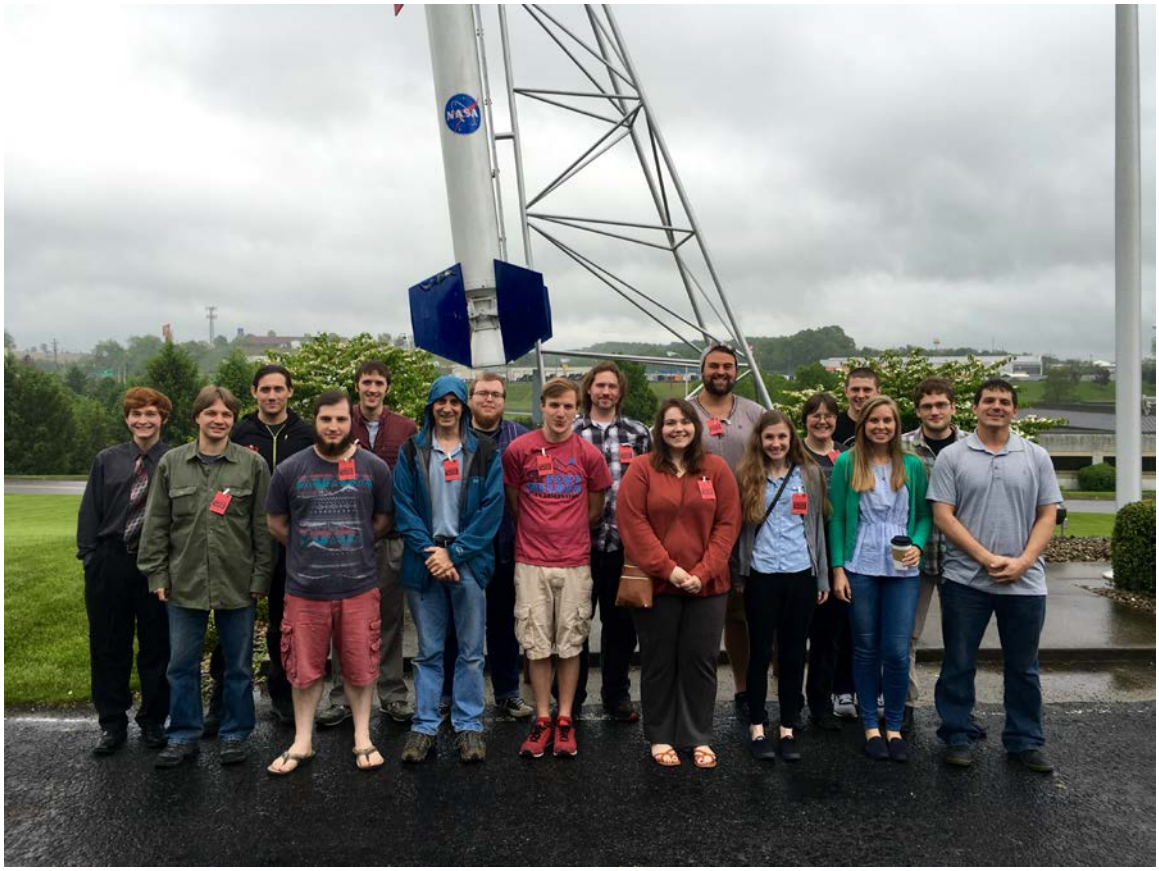

Student Names

Advisor Names

Advisors: Steven Hard (IVV), Greg Lusk (WVU), Dr. Jon Saken (MU), Dr. Tracey DeLaney (WVWC), Dr. Farshid Zabihian (WVU-Tech), Dr. Ralph Wojtowicz (SU), Dr. Gale Hansen (FSU), Dr. Marek Krasnansky (WVSU), David Teets (BRCTC), Dr. Shahed Mustafa (BVCTC)

School Names: West Virginia University, Marshall University, West Virginia Wesleyan College, WVU-Tech, Shepherd University, Fairmont State University

NASA Collaboration: NASA Independent Verification & Validation Facility

6/8/2016

1.0 Mission Statement, Requirements, and Expected Results

Mission objective: capture NIR images of Earth from space, measure Earth's magnetic field, compare accuracy of redundant flight dynamics data, estimate relative position of the sun, & detect ionized particles

Requirements: system shall provide knowledge and hands-on experience to students, system shall be able to save data during flight for post analysis

Expected Results:

- Capture NIR Earth images from space
- Measure plasma density in upper atmosphere
- Measure atmospheric pressure and magnetic field of Earth
- Gather redundant flight dynamics data
- Determine attitude in space relative to sun
- Strain on PCB during launch

Benefits SmallSat community with low cost COTS orientation estimation solution

2.0 Final Payload Design

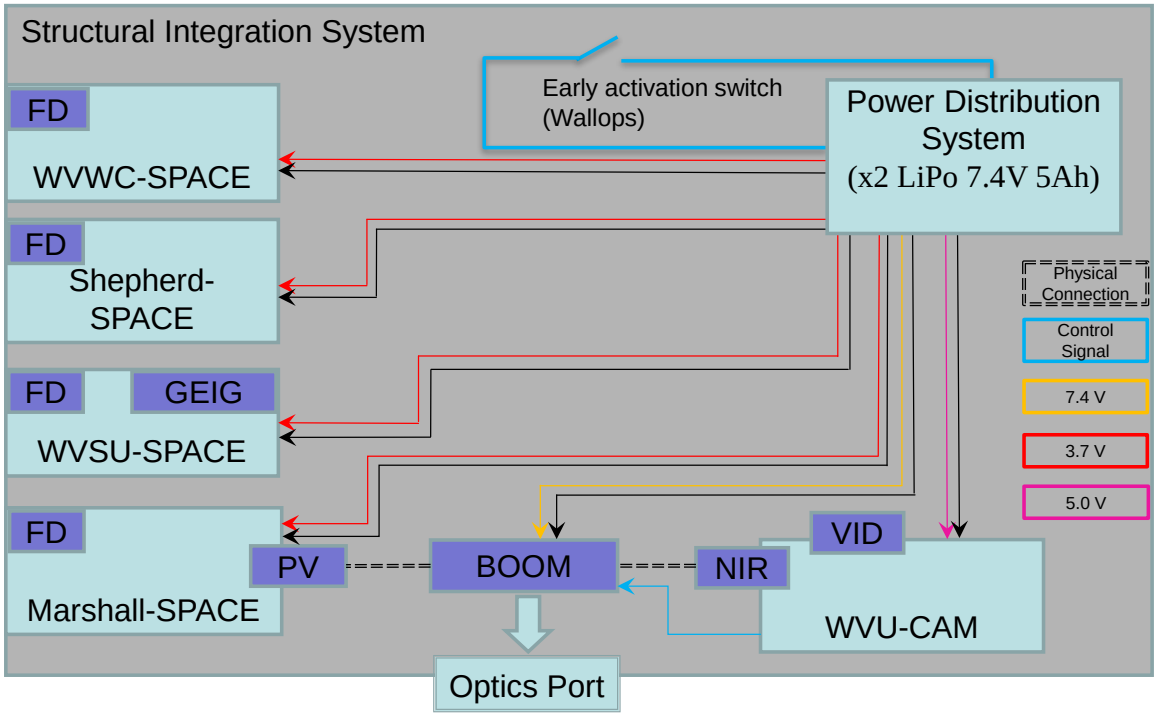

Figure 1: System Level Diagram - Lower Section

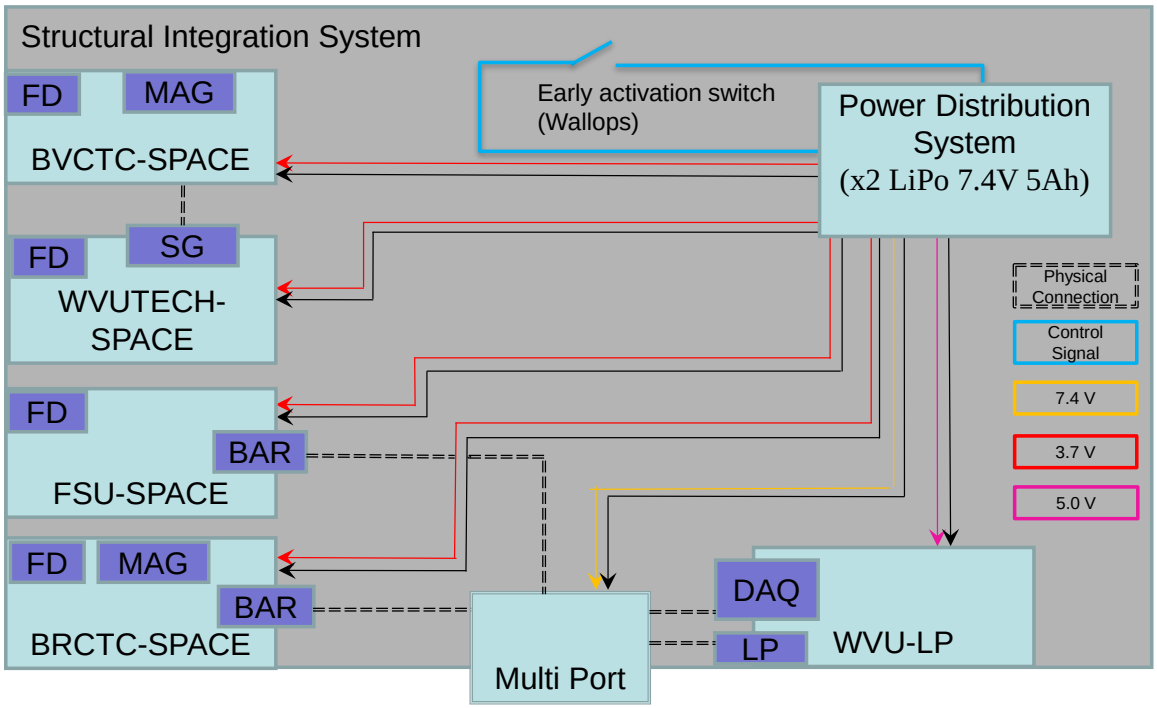

Figure 2: System Level Diagram - Upper Section

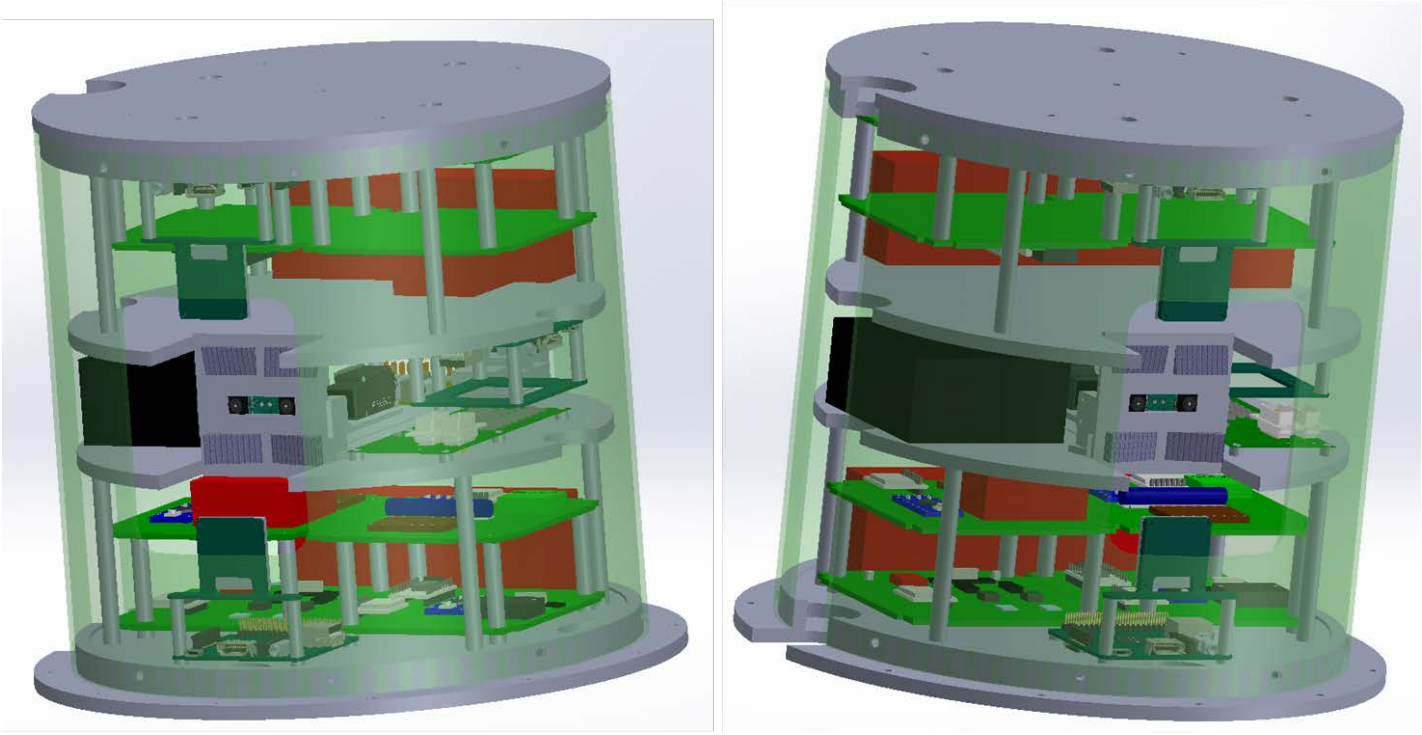

Figure 3: Mechanical Model : Isometric Front View

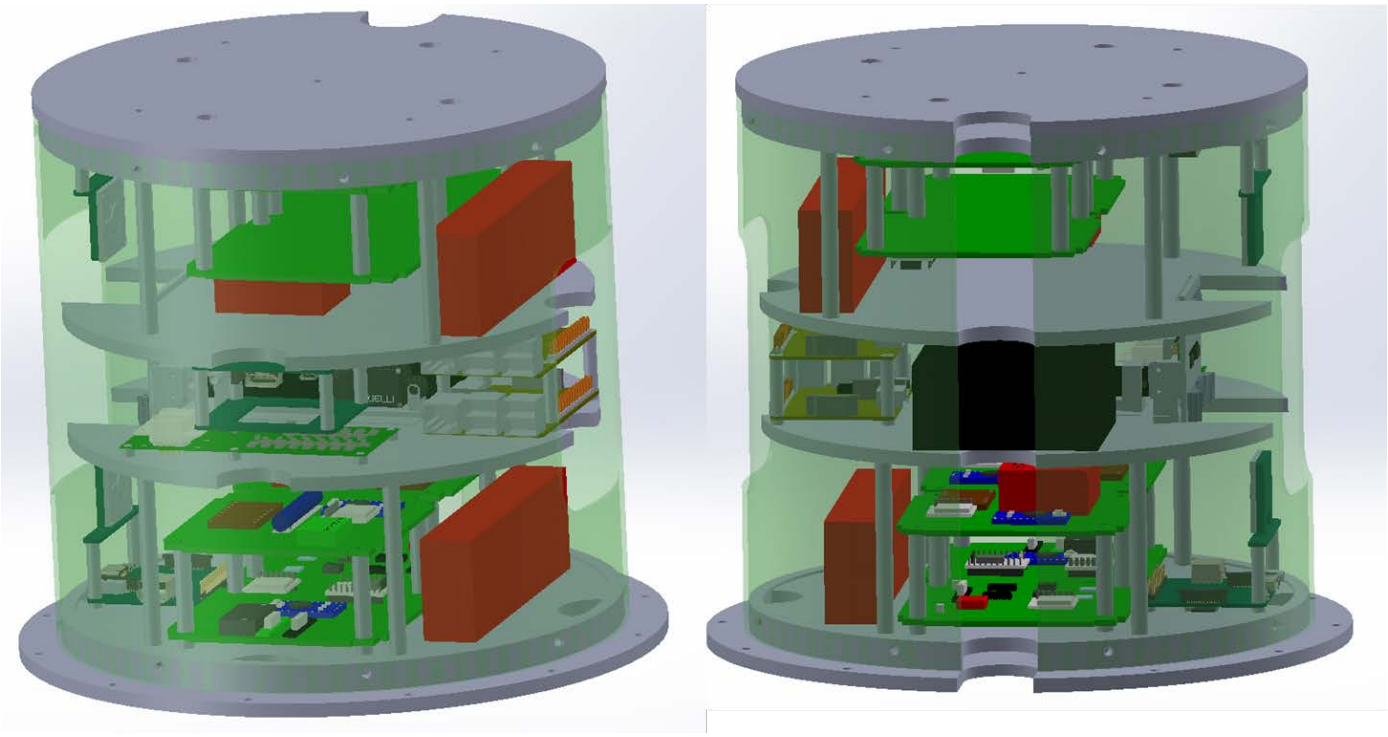

Figure 4: Mechanical Model - Isometric Back View

Figure 5: Special Port Assembly

Figure 6: Final Ballast Determination

Figure 7: Bottom Section and MP Port Integration

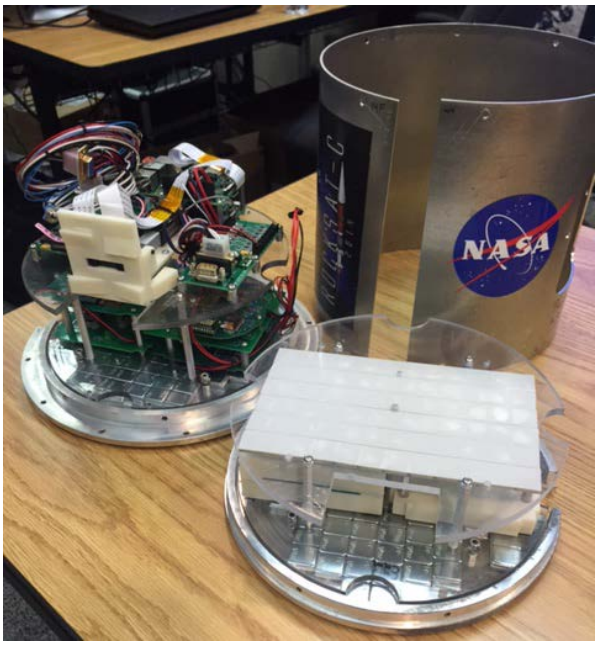

Figure 8: Final Payload Configuration w/ Ballasts

WV Rocketeers	
RSC 2016 Final Mass Budget	
Component	**Weight (lbf)**
Target Weight (lbf)	20
Total Payload Weight (Full Canister)	12.625
Payload Dry Weight	5.975
Total Ballast Weight	7.375
Total	20.005
Over(+)/Under(-)	0.005

Figure 9: Final Mass Budget

3.0 Testing Results

A. Integrated Subsystem Testing Results

Integrated subsystem testing for each experiment is completed and results can be found in the WV-SPACE FMSR presentation with the exception of the WVU-LP I-V curve. A brief summary of the test are as follows:

WVU-SPACE

-WVU-CI

- Field test – NDVI analysis verified
- Final boom extension check – positioning verified
- VID camera angle check – positioning verified

-WVU-LP

- DAC sample rate optimization – can get up to ~300 Hz
- I-V amplifier characterization – got the I-V curve

MU-SPACE

- Solar panel characterization – verified DAQ and solar cell configuration

WVSU-SPACE

- Hamster ball drop test – integrated system survived the stairs
- Helmholtz coil test – tested full system in strong b-field

WVWC-SPACE

- Motor spin test – verified ground motor spins equal and opposite
- Shaker table test – survived the paint shaker

BRCTC-SPACE

- Robotic arm test – survived the robotic arm shake
- Balloon tether test – full system test on a balloon…too windy
- Kite test – full system test on a kite…no wind

FSU-SPACE

- Benchtop PCB test – verified all systems go

BVCTC-SPACE

- Benchtop PCPlus box test – verified all systems go

SU-SPACE

- Benchtop PCB test – verified all systems go

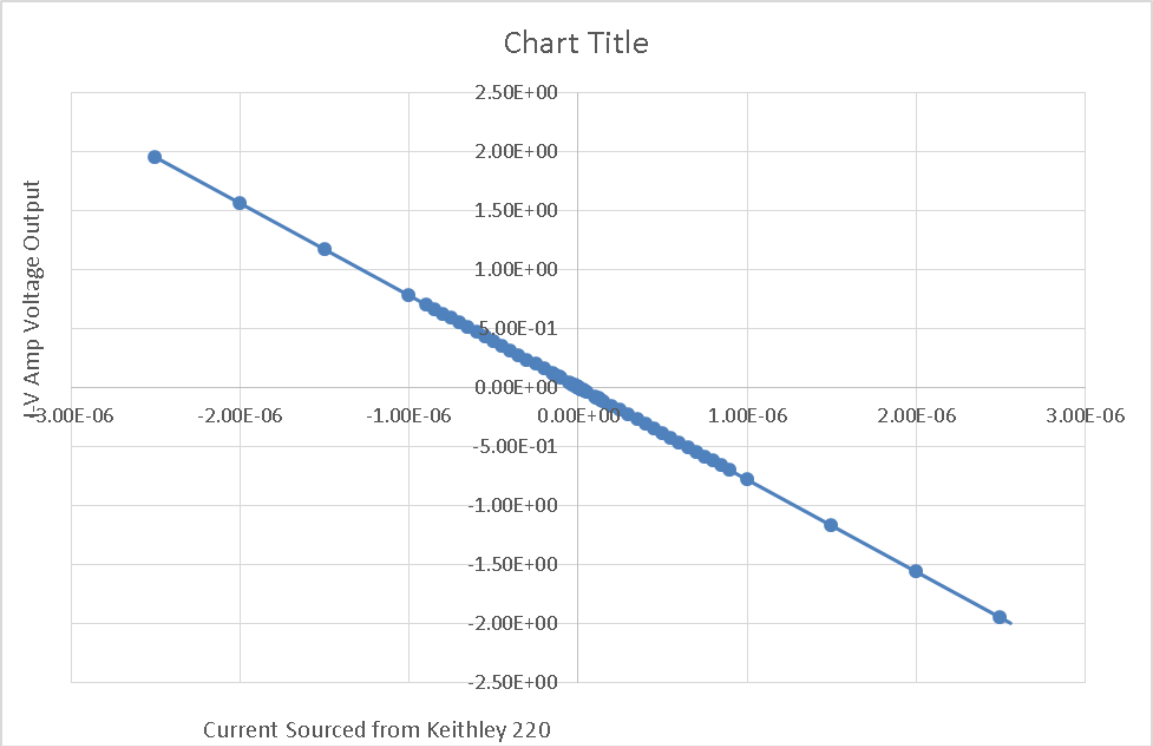

Figure 10: WVU-LP I-V Amp Characterization (Not in FMSR)

B. Full Mission Simulation Results

A full mission simulation was run during the ATK vibrations test which occurred on 6/2. The payload was fully integrated with the exception of the MU-SPACE solar panel experiment. The duration of testing was approximately 30 minutes. Non-flight batteries were used to power all experiments integrated in the canister. The data has not yet been fully analyzed, however all team leads have indicated that the data appears as expected and all subsystems seem to have been operating during the test. Therefore, the full mission testing results were considered successful. The vibration curves from the tests can be seen in the following figures:

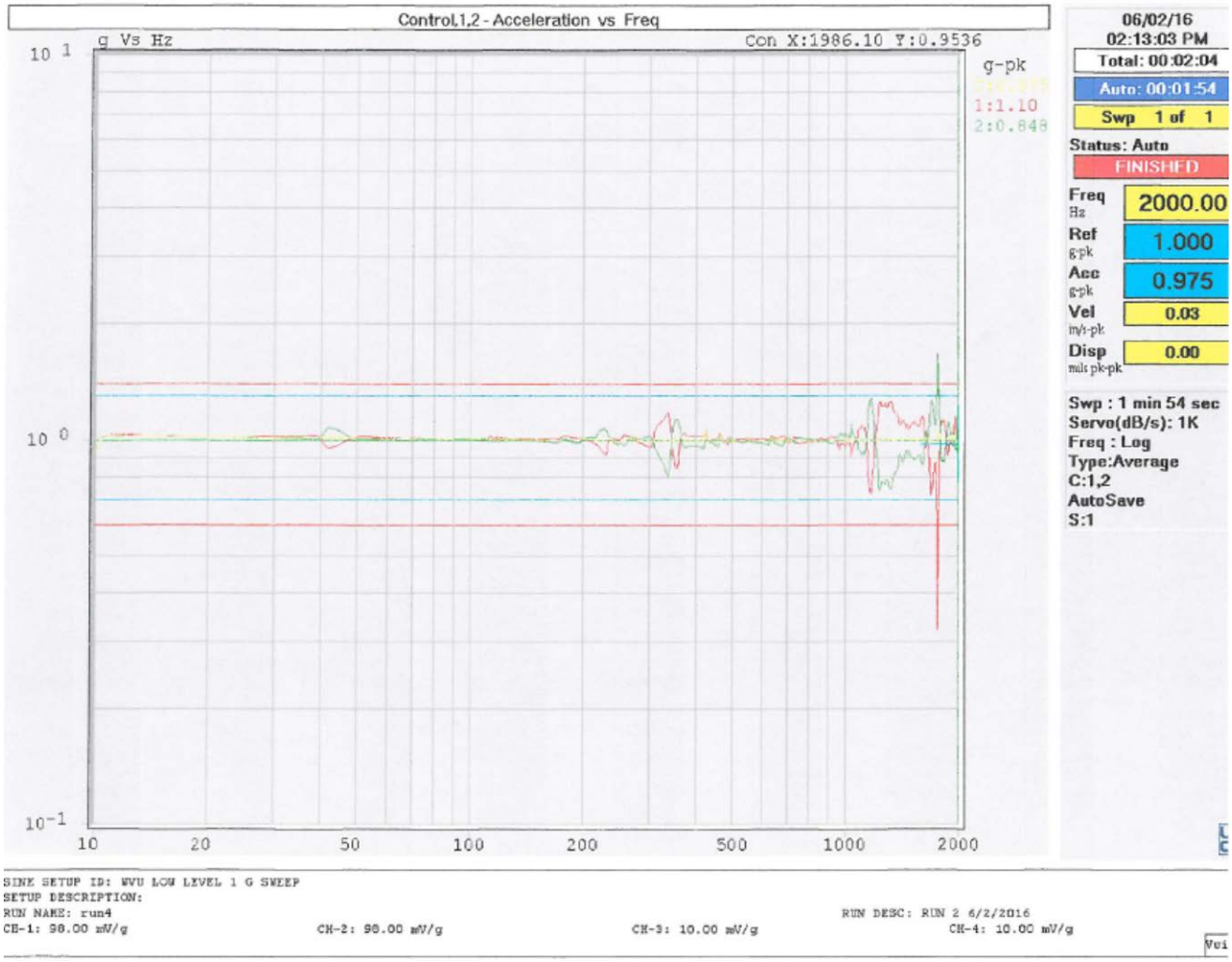

Figure 11: 1G Sine Sweep

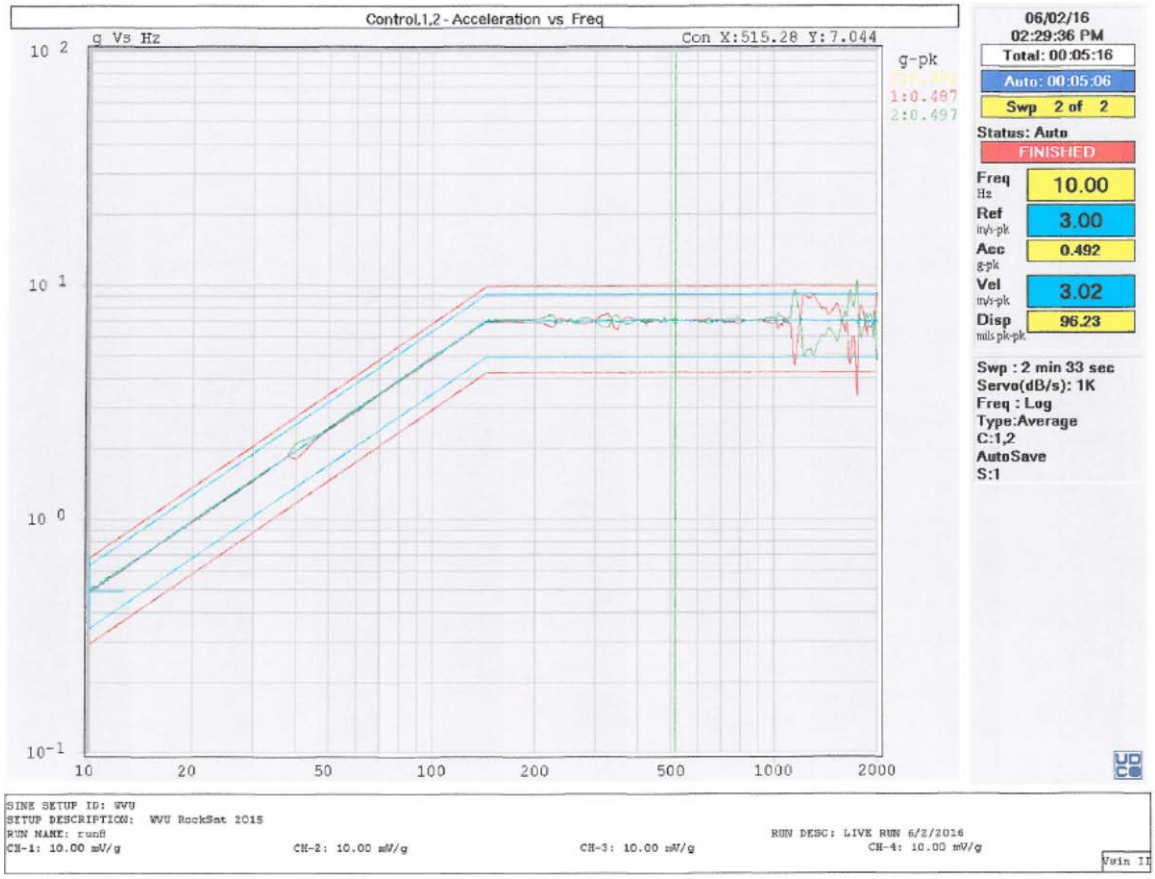

Figure 12: 10G Sine Ramp

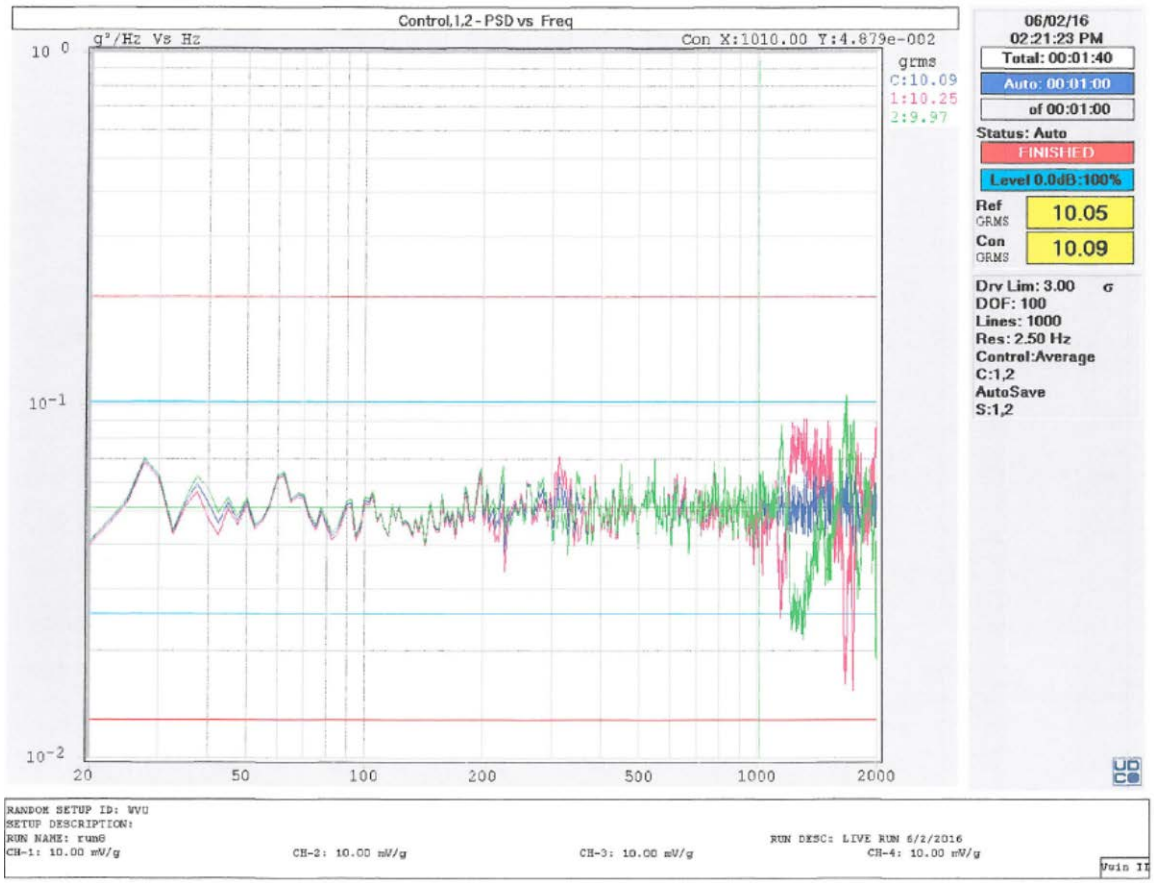

Figure 13: Random 10G RMS

4.0 Launch Readiness

A. User Guide Compliance

Use the table included on the next page to detail your compliance with the User Guide Requirements. If any item is not yet meet, include a very detailed description of why it is not meet, how it will be meet, and when that will happen.

Requirement	*Status/Reason (if needed)*
Center of gravity in 1" mid-can	Yes

Contained in can	Yes
Connected to can by 4 or 5 bulkheads on top and bottom only	Yes
Mass at 20±0.2lbs	Yes
Shared canister clearance	N/A
No voltage on the can	Yes
Activation wires at least 4 ft	Yes
Activation wire at least 24 gauge	Yes
Early Activation: current < 1 A	17.7 mA
T-0 Activation: current < .1 A	N/A
Battery Type	Li-Po 2 Cell (7.4v) x2

B. Integration Plan and Procedure

This section includes a brief description of the WV-SPACE integration plan, and the full integration plan and procedure is attached as an appendix to this document.

- Arrive at Refuge in ~12pm and set up in conference room
- De-integrate payload from last year's canister
- Integrate payload sections into bottom bulkhead and mid-mounting plate
- Run through checklist before check-in

C. Action Items

This section is very important and will be referenced upon arrival at the Refuge Inn. List all the action items left to complete before arriving at Wallops:

- 3D print new version of VID camera mount and battery holder
- Install new bulkhead standoffs to make more room for ballasts
- Integrate Marshall University payload and refit/reweigh. Adjust ¼ oz ballast weights if necessary
- Finalize camera software settings for launch scenario

5.0 Conclusions (0.5 to 1 page)

Feeling good overall, we are 95% integrated with a placeholder for Marshall U. I'm only concerned that the solar cells were not tested in the preliminary vibrations testing at ATK. A risk is being taken to rely on a conformal coating to dampen vibrations on the solar cells and provide a layer of protection against any

inadvertent contact with tooling or wiring harnesses. To mitigate this risk, a second solar panel will be fully assembled and ready to be installed if the flight version is somehow damaged.

6.0 Appendices

Integration Plan:

- Receive payload from Marshall university: 6/13
- Final fit check and integrated test: 6/14
- Arrive at Refuge Inn: 6/16 @ 12 pm
- 2015 canister de-integration
    - Remove lower-mid Makrolon plate
    - Remove lower Makrolon plate
    - Repeat process for upper section
- 2016 canister integration
    - Reverse the process for integration into 2015 canister
    - Tighten all standoffs and fasteners
    - Apply locktite to all fasteners
    - Final staking of wiring
    - Run through check-in procedure prior to actual check-in (3pm)