WV Rocketeers

Subsystem Testing Review

WVU WVU-TECH
FSC SU MU WVWC
JFFL NASA IV&V

Steven Hard, Zack Dixon, Greg Lusk, Rachelle Huff, Seth Baker, Andrew Tiffin

3/2/15

Presentation Outline

- Section 1: Mission Overview
- Section 2: Final Design Description
- Section 3: Subsystem Status & Testing Results
  - 3.0a: WVU
  - 3.0b: WVWC
  - 3.0c: Marshall University
  - 3.0d: WVU-Tech
  - 3.0e: Shepherd University
- Section 4: Full System Testing Plan
- Section 6: Project Management Update
- Section 7: User Guide Compliance

1.0 Mission Overview

Steven Hard

Mission Overview

- The objective of the WV RSC'15 mission will be to develop and test several science and engineering experiments for space operations
- Shall capture NIR Earth images from space, measure magnetic field of Earth, gather redundant flight dynamics data, & detect ionized particles
  - Need access to optics port
- Expect to validate the NOAA magnetic field model using data taken during the flight and to assess vegetation health with Earth images
- Benefits SmallSat community – COTS orientation estimation
- Elementary school systems – promote STEM careers

Concept of Operations

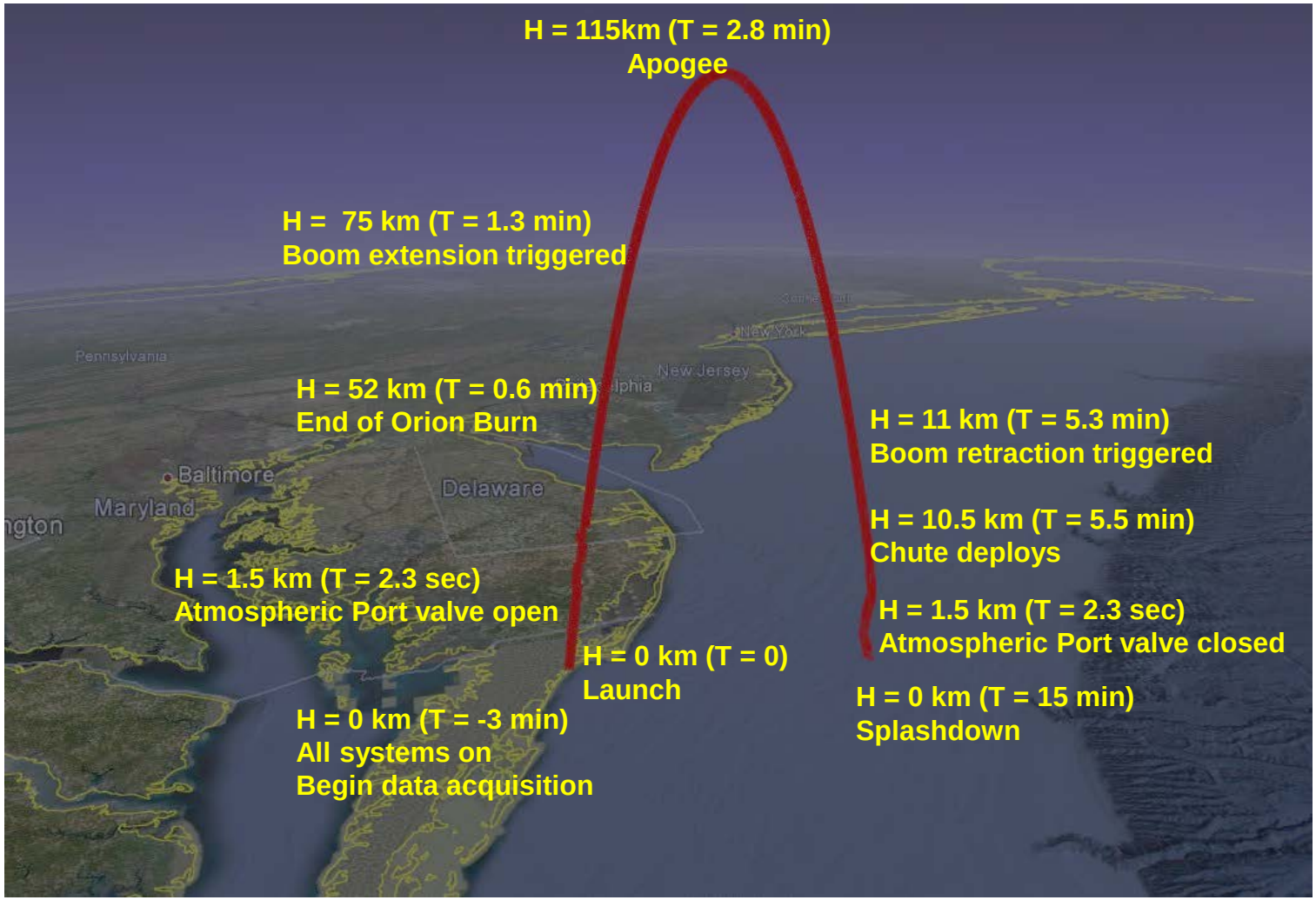

2.0 Final Design Description

Steven Hard

System Level Block Diagram

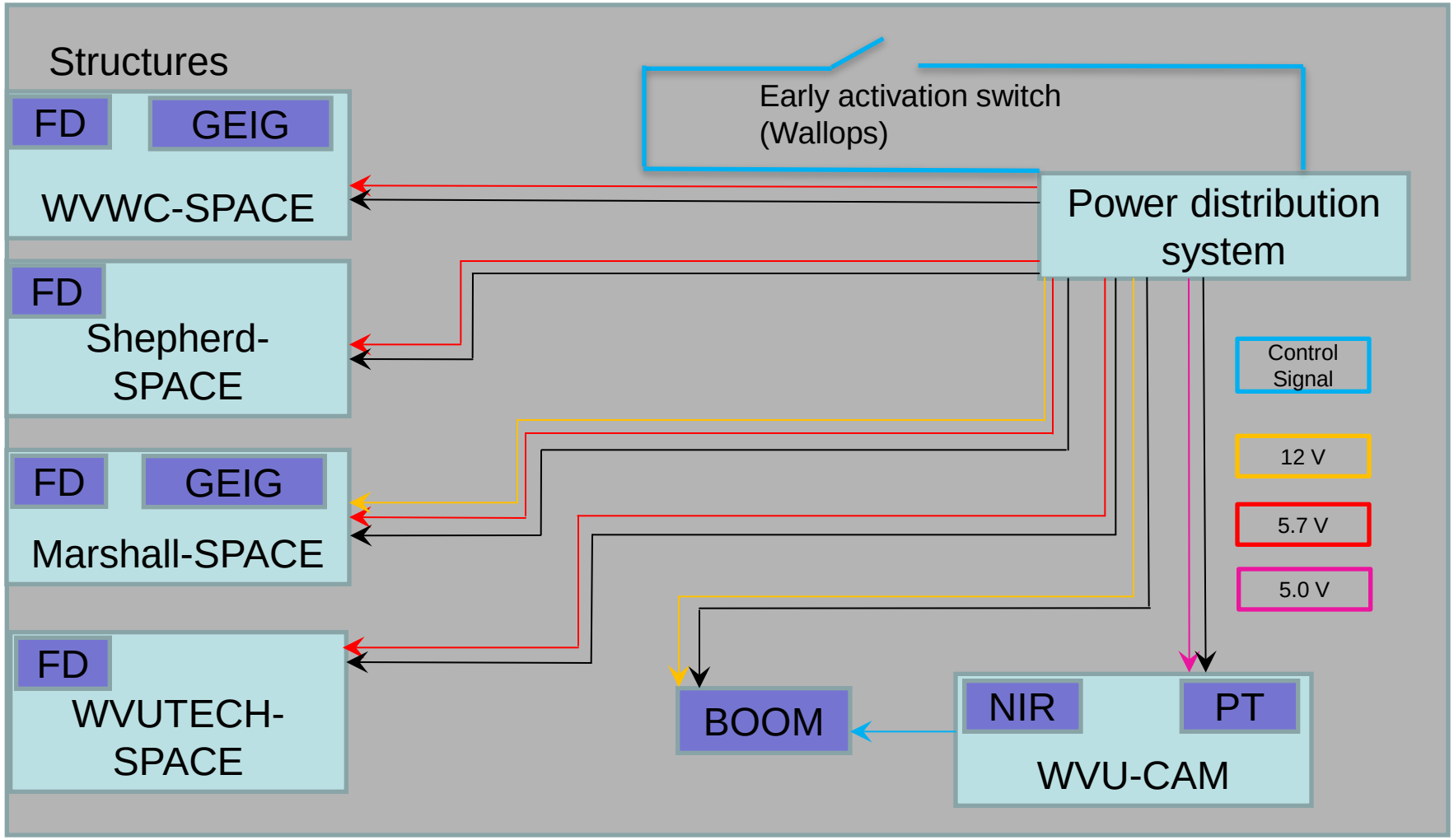

Changes from CDR

- SPACE (x4) payload power lines changed from 12V to 5.7V
- Marshall-SPACE Geiger counter integrated on 1 PCB footprint
- WVU-Cam adding 2nd RasPi for image processing

Mechanical Model: Isometric Front

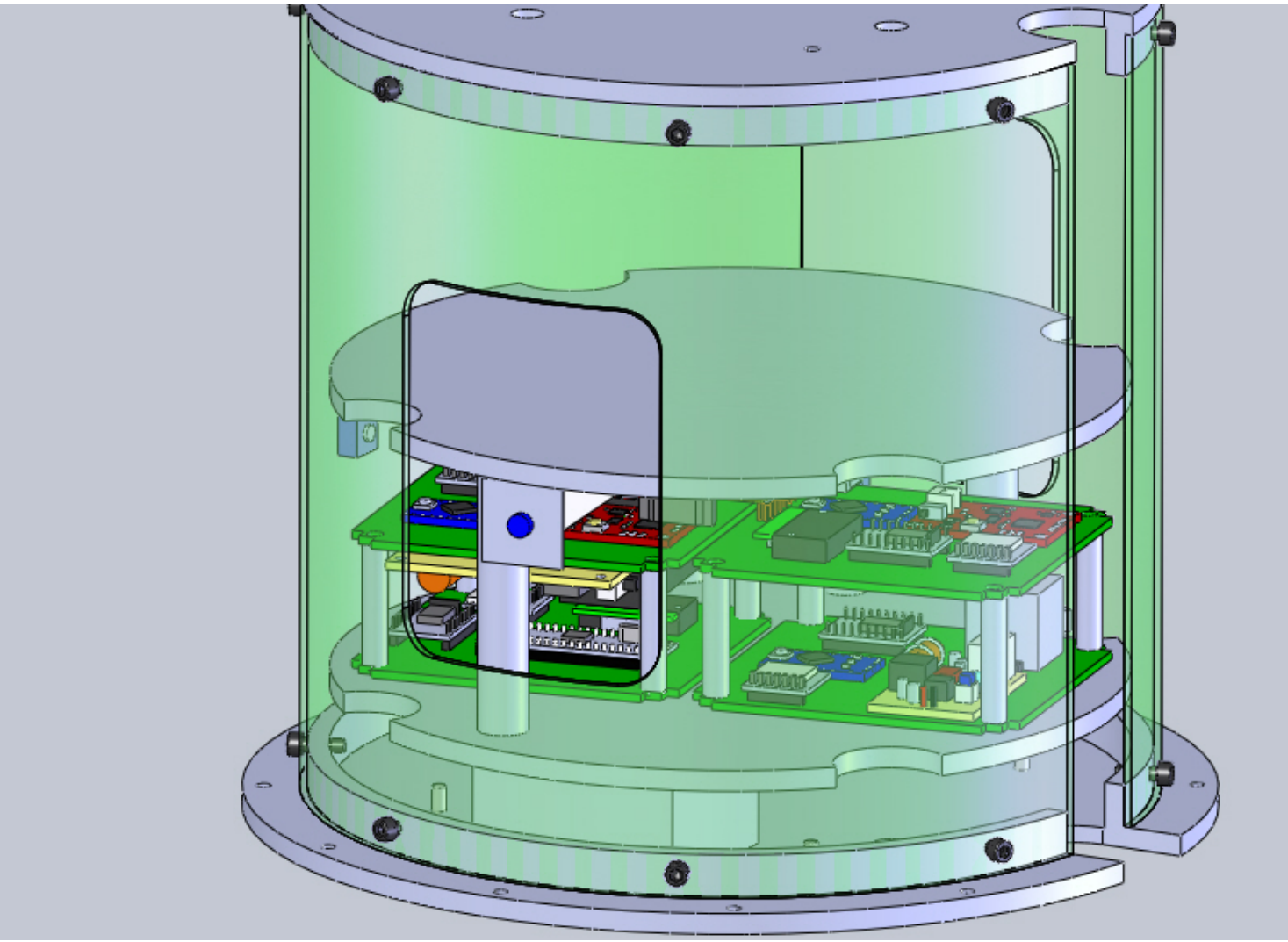

Mechanical Model: Isometric Back

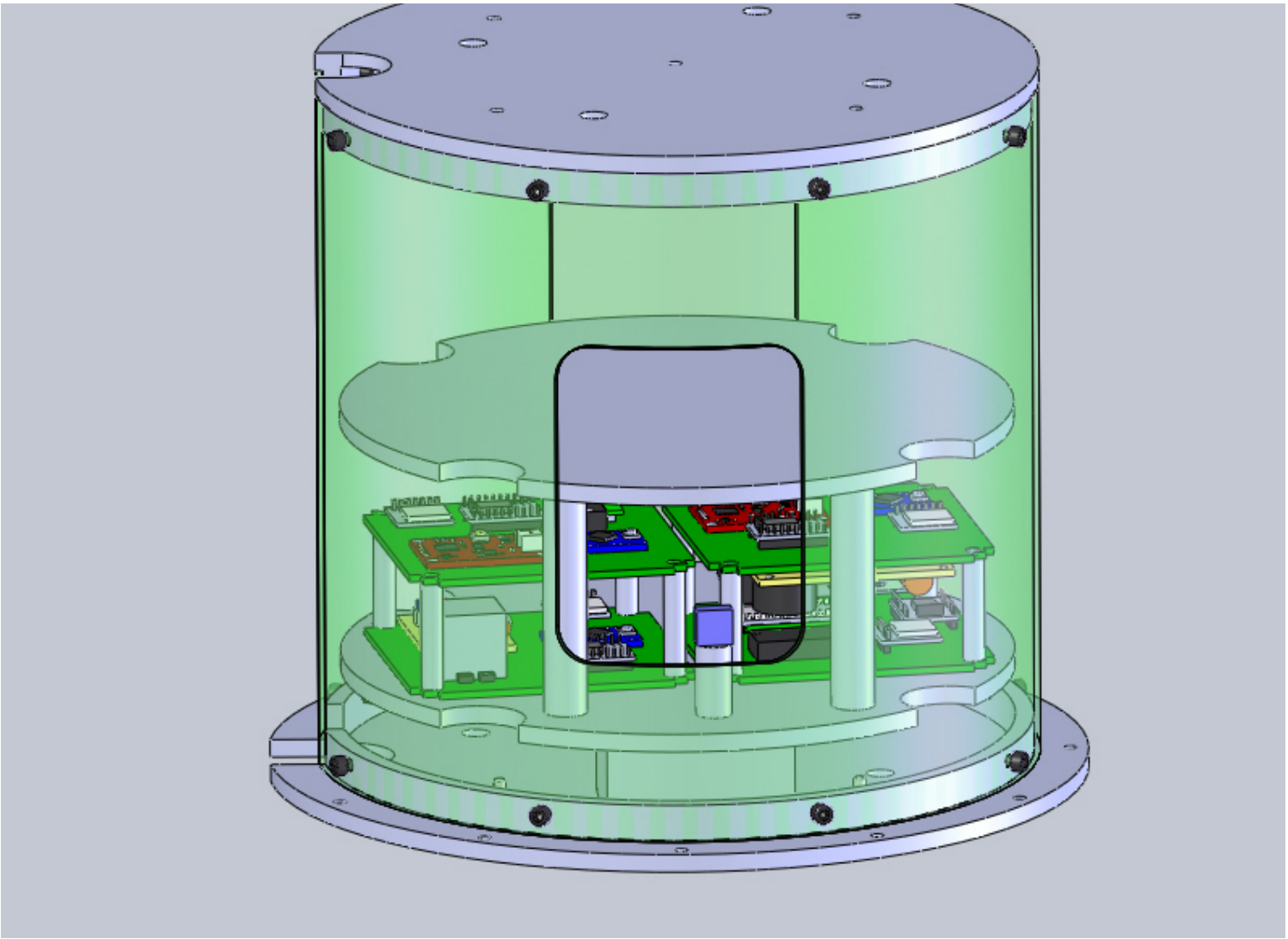

Detailed Mass Budget

WV Rocketeers		
RSC 2015 Mass Budget		
Subsystem	**Component**	**Total Mass (lbf)**
WVWC-SPACE	PCB	0.1
	Sensors/DAQ	0.047
WVUTech-SPACE	PCB	0.1
	Sensors/DAQ	0.05
Marshall-SPACE	PCB	0.1
	Sensors/DAQ	0.12
Shepherd-SPACE	PCB	0.1
	Sensors/DAQ	0.1
WVU-CAM	Sensors	0.3
	Container	0.2
	Single Board Computer	0.3
	Actuators	0.2
PDS	Batteries	0.4
	Battery Holders	0.1
	PCB	0.1
SIS	Makrolon plates	1.4
	Standoffs/Mounts	1
	Ballast	0.483
Canister	Half Can	3.3
	Mid Plate	1.5
Target Weight (lbf)		10
Total		10
Over(+)/Under(-)		0

Hazardous Mechanical Items

- WVU-Cam linear actuator is only hazardous item identified
  - Hazard mitigation plan to mount actuator such that the physical limits do not exceed hazard area (optics port)

Updated Power Budget

12/1/2014					
Subsystem	**Voltage (V)**	**Max Current (A)**	**Time On (min)**	**Watts**	**Ah**
WVWC-SPACE	5.7	0.04	30	0.23	0.02
WVU-TECH SPACE	5.7	0.19	30	1.08	0.10
Marshall-SPACE	5.7	0.10	30	0.57	0.05
Shepherd-SPACE	5.7	0.10	30	0.57	0.05
WVU-CAM	5.0	1.50	30	7.50	0.75
	Total	1.93		9.95	0.97
	Total Power Capacity				4.80
	Over (+)/Under (-)				3.84
			# of Flights Margin		**1.0**

Hazardous Electrical Items:

- No hazardous electrical items identified
  - All low voltage components utilized

De-Scopes and Off-Ramps

- Single voltage supply for SPACE experiments requires multiple step up/down regulators
  - 12 V power lines will be supplied to SPACE experiments if step up regulators are not implemented
- Linear actuator on WVU-Cam experiment has highest risk
  - Enhances experiment but not crucial
  - Can be excluded if necessary

3.0a Subsystem Testing Results - WVU

Steven Hard

WVU-CAM: Electrical Diagram

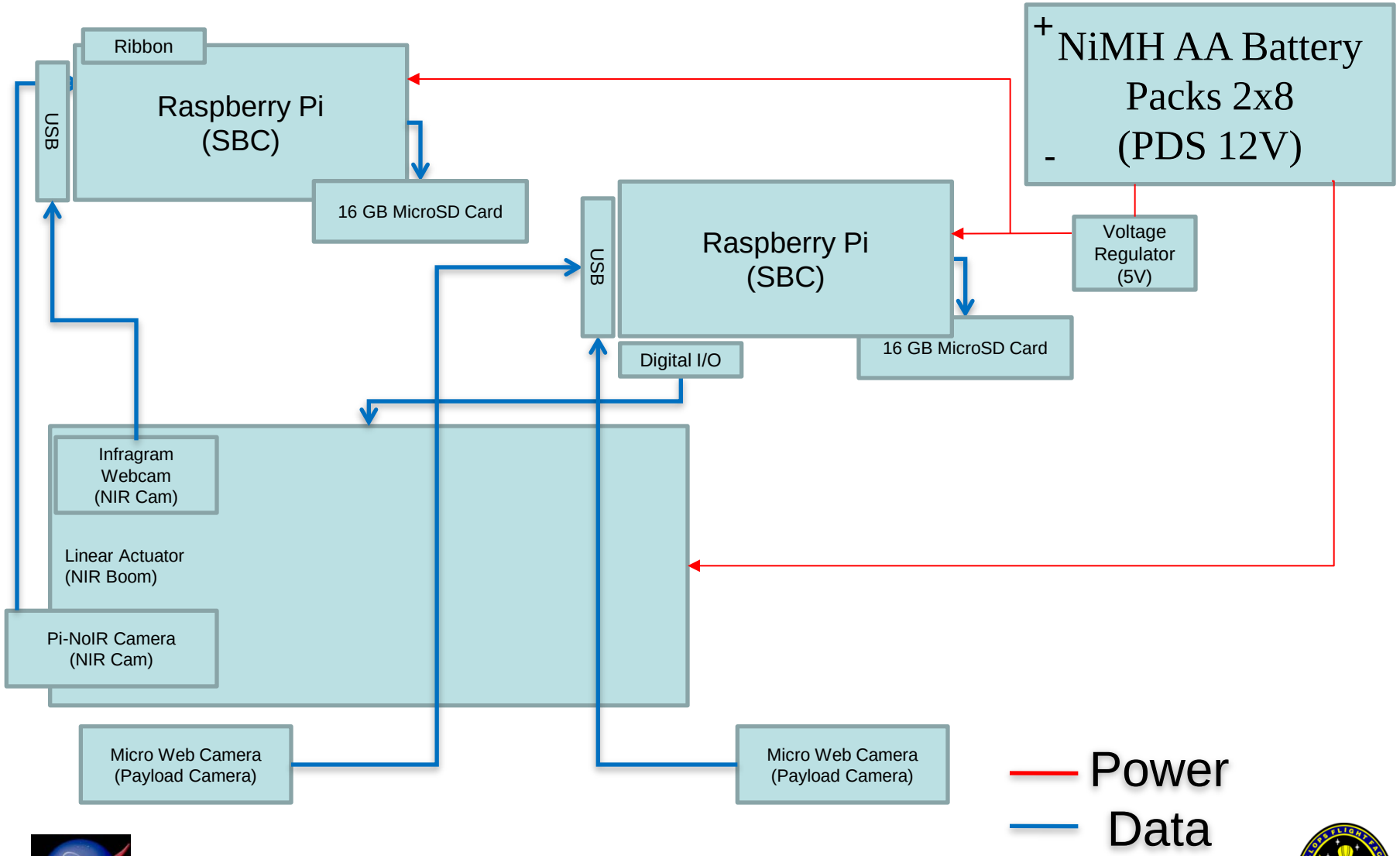

WVU-CAM: Software Design Elements

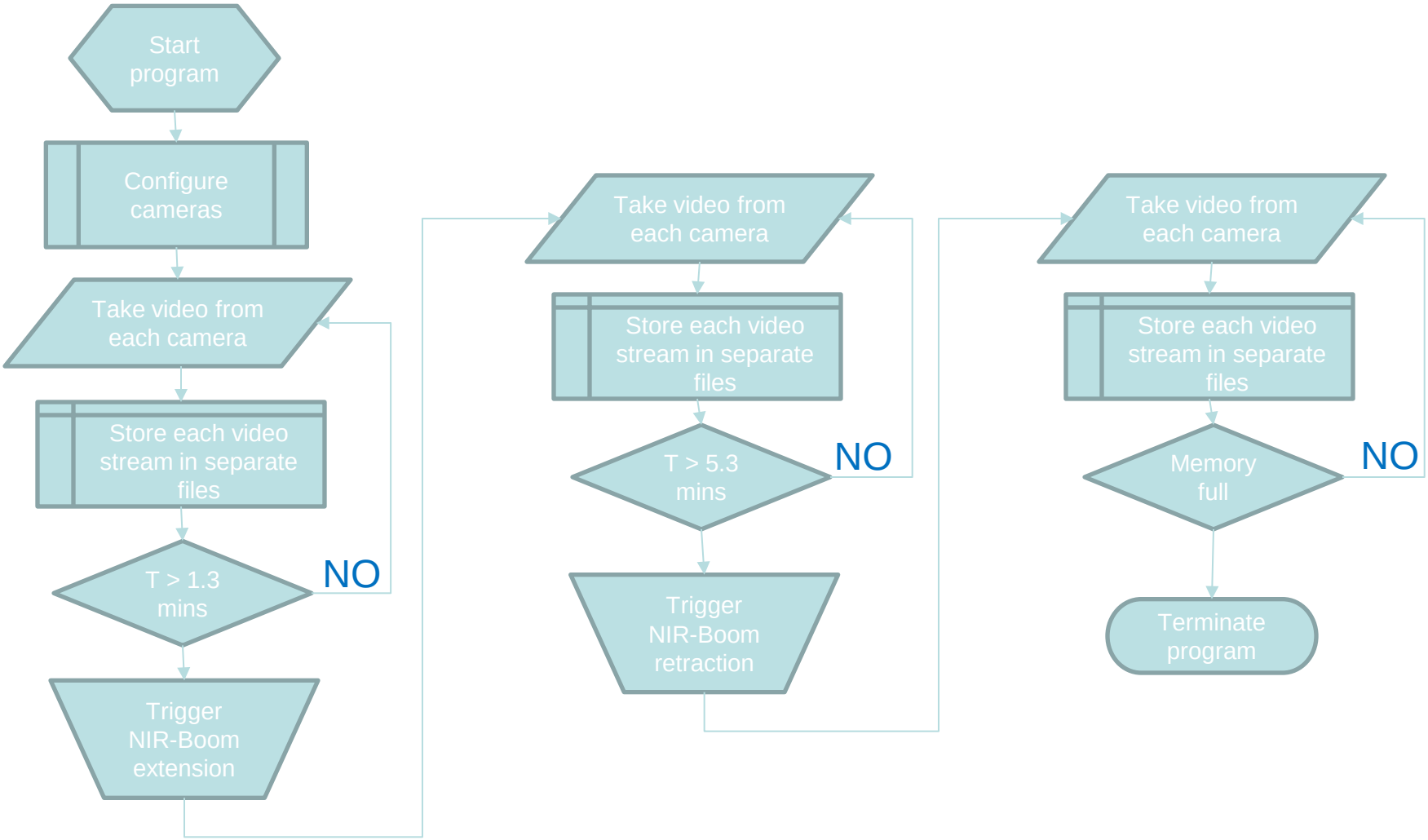

Mechanical Elements

- RasPi, cameras, and linear actuator procured and tested
- Payload mounting plates not yet purchased

Electrical Elements

- Using mostly COTS parts
- PDS prototyped
  - PCB finalized for manufacturing
- All electrical components in-house

Software Elements

- Video processing code developed
- Linear actuator code developed
- On-going software integration and debugging

WVU-CAM

- Quick Status
  - Webcam software testing complete
    - Tested successfully on payload telemetry webcams
    - Infragram plant analysis (NIR) webcam has not yet been tested with webcam software module
  - Pi-cam software testing complete
    - Tested successfully using Raspberry Pi system camera software module
  - PWM software testing complete
    - Linear actuator tested successfully using PWM software module

3.0b Subsystem Testing Results - WVWC

Andrew Tiffin

Eric Kramer

Updates from CDR

- Geiger Counter is functioning properly.
- Payload design now interfaces the IMU, magnetometer and Geiger counter, and are all tested and functioning.
- PCB is being prototyped.
- We plan to use a 9-V Voltage regulator to power the Geiger counter.

Mechanical Design:

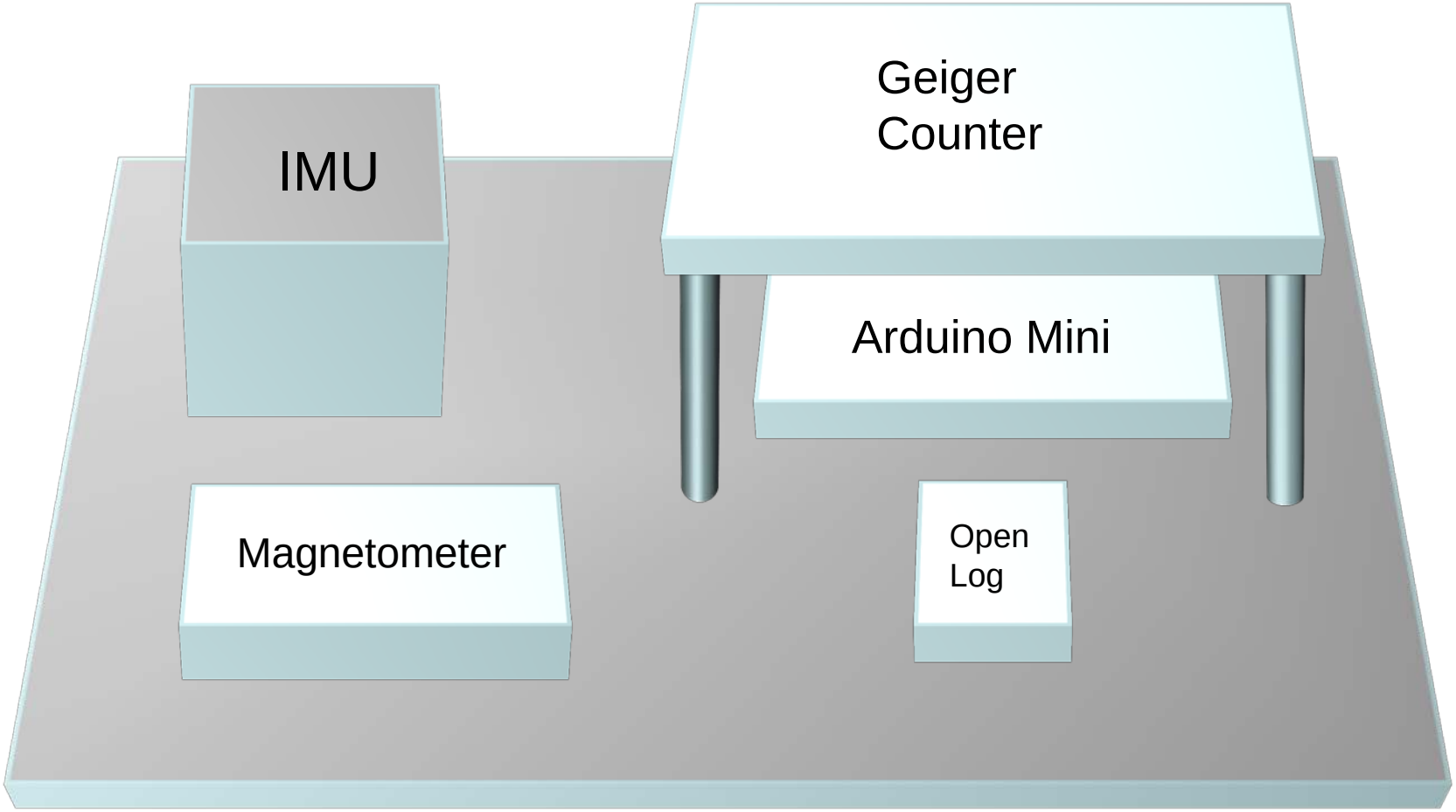

Electrical Design

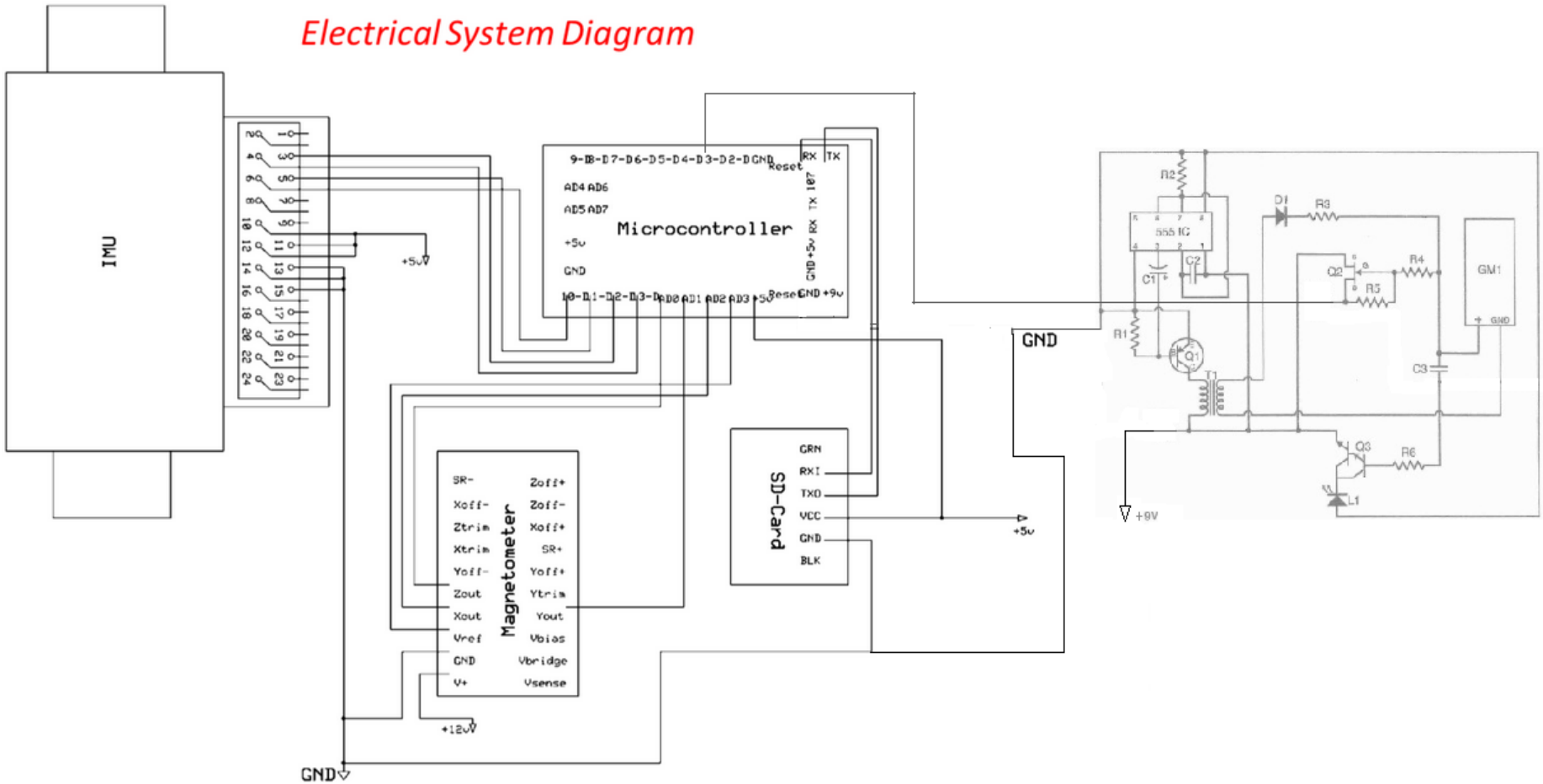

Software Flow Diagram

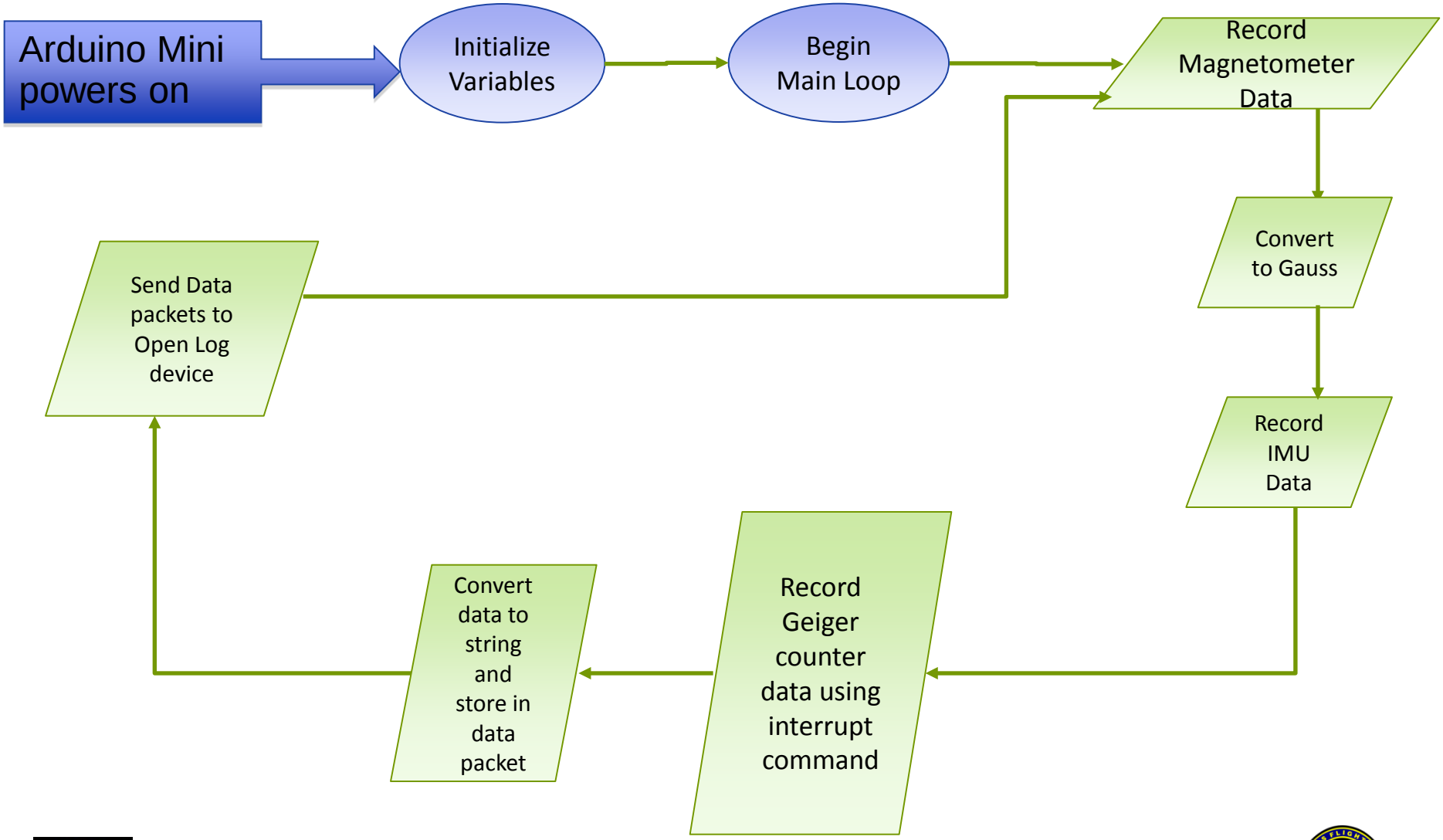

Schedule Update

- Balloon launch has been rescheduled for March 7th.
- Almost finished with first PCB design.

Electrical Elements

- Latest PCB needs to be printed
- 9-V voltage regulator to power Geiger Counter.

Software Elements

- IMU, magnetometer and Geiger counter code is complete.
- Geiger Counter code still needs to be tested.

Subsystem Overview

- Magnetometer
- IMU
- Geiger Counter

nisd.net

Magnetometer

Tested

-Magnetometer code is functioning properly

Not Yet Tested

-Finish calibrating magnetometer.

Magnetometer Tests

- Comparing known magnetic field in our region with the voltage output of the magnetometer.

IMU

- Tested
  - -IMU coded compiled and uploaded
  - -IMU calibrated

IMU Testing

- Used a turntable with calibrated rotary motor sensor.
- Compared rotations per second for each sensor.

IMU Test Data

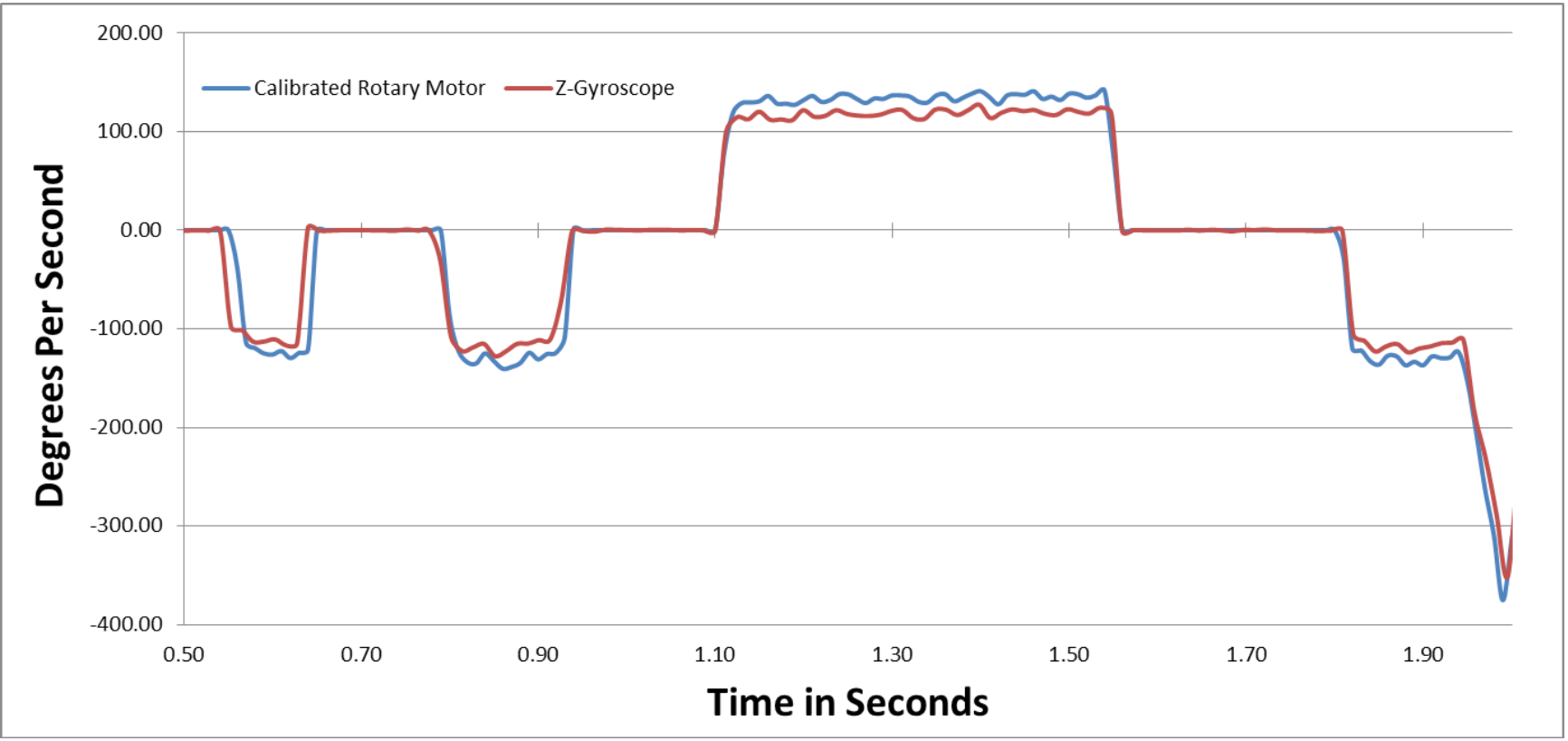

Geiger Counter

Test

- Functioning properly
- Have written code to record count rate for Geiger counter.

Not Yet Tested

- Calibration against working Geiger counter

Geiger Counter Test

- Confirmed that the Geiger counter is working properly by exposing it to a known radioactive source.

3.0c Subsystem Testing Results - Marshall

Seth Baker

Payload Prototype Picture

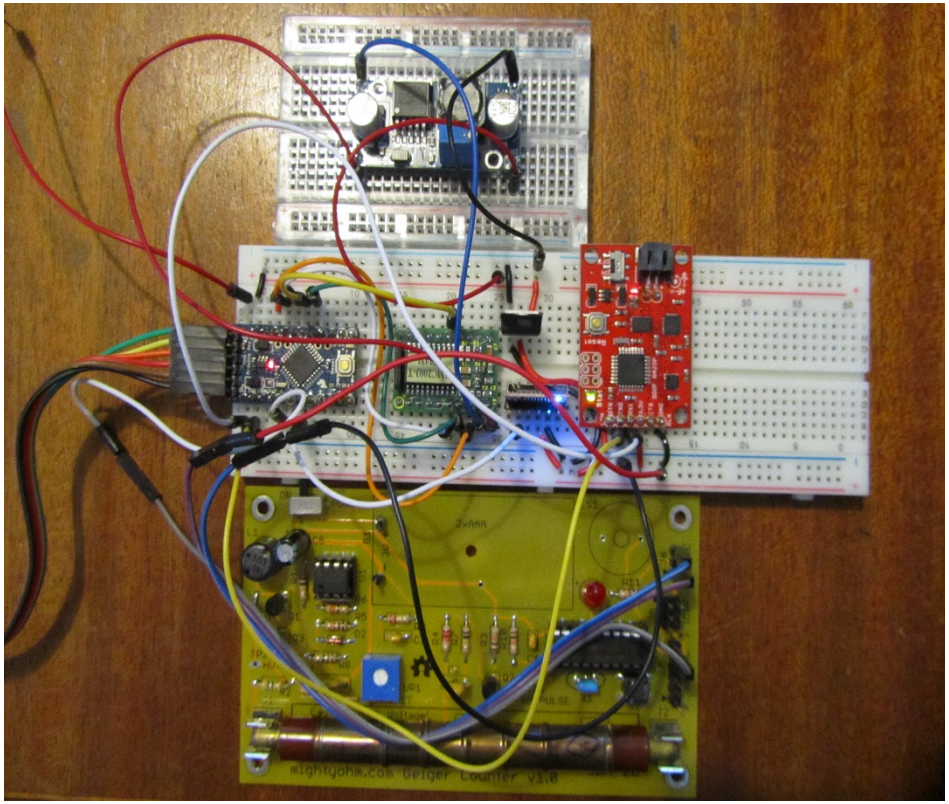

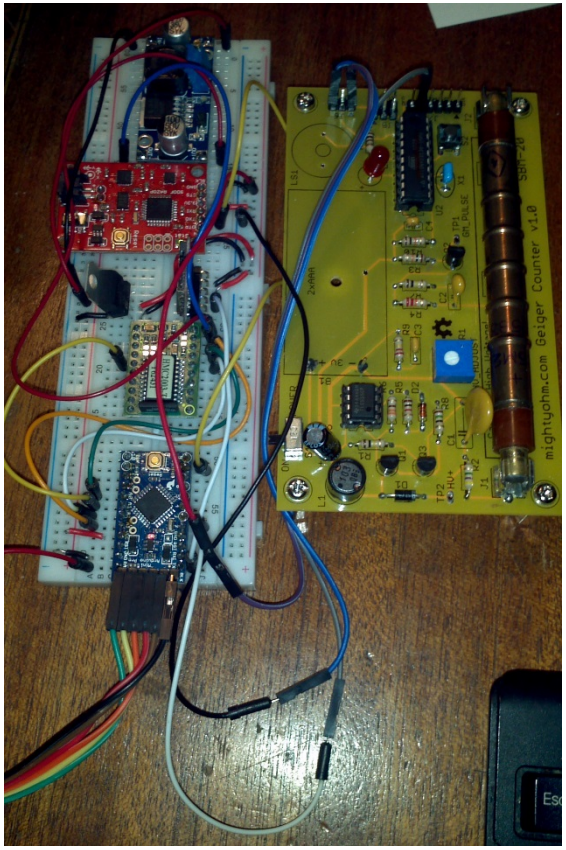

Recorded Data (2/25)

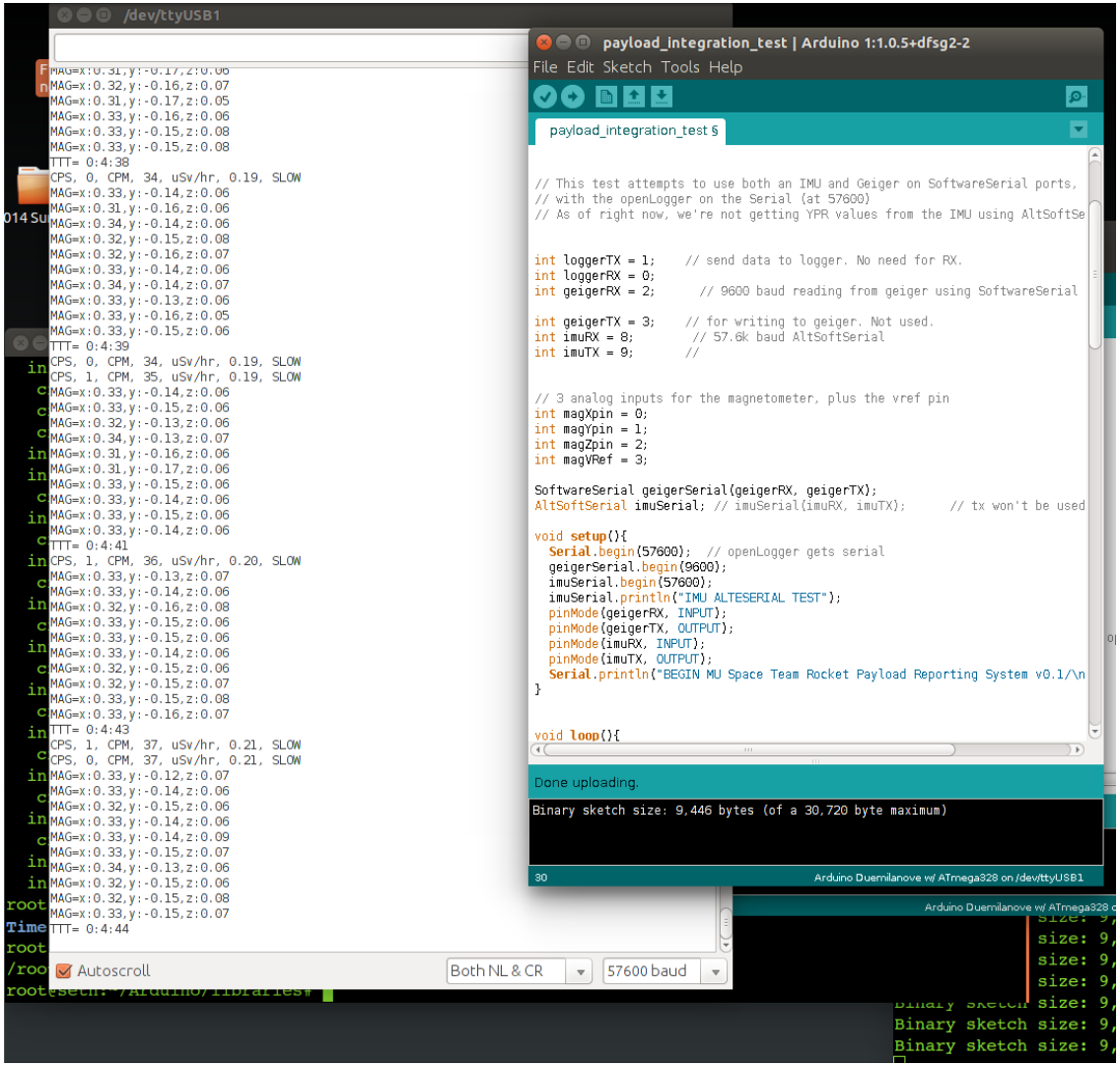

MU Space Team Rocket Rocksat-C 2015 Payload FBD

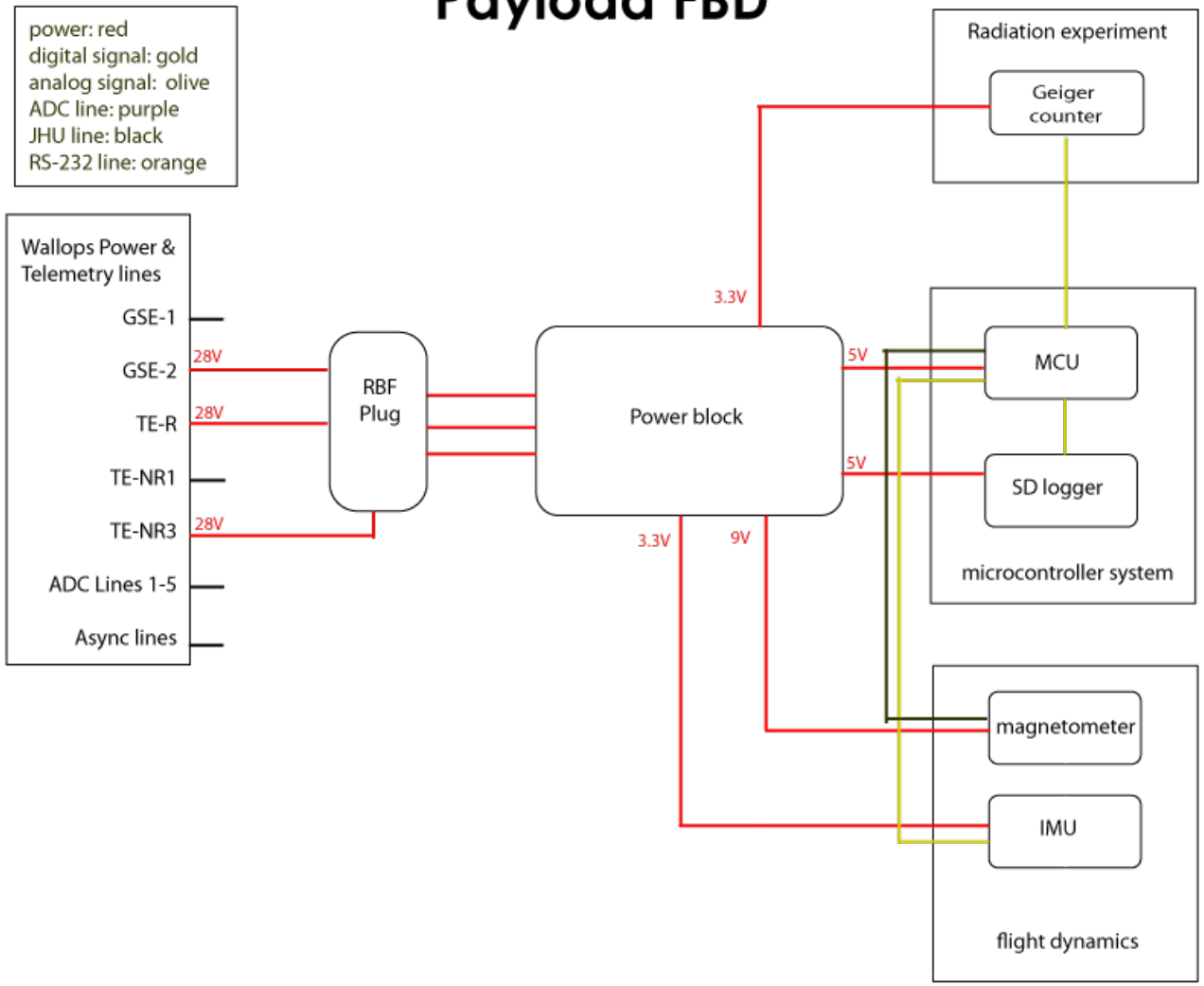

Changes from CDR

- We've included the Analog Devices IMU in our design (this is recent and it's not in the schematic yet).
- We're actively investigating adding a redundant Arduino and logger.

Final Electrical Schematic

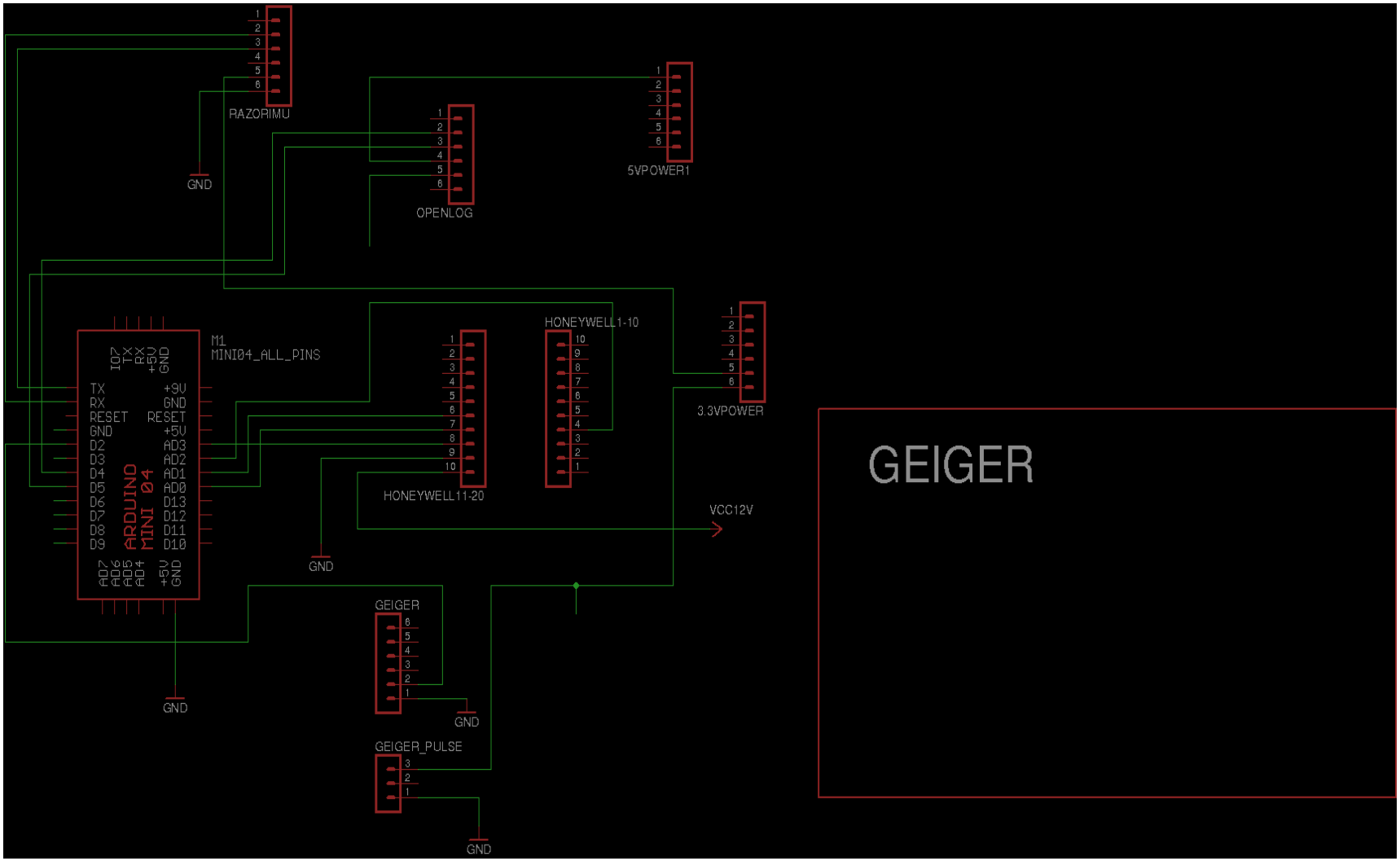

Final PCB Design

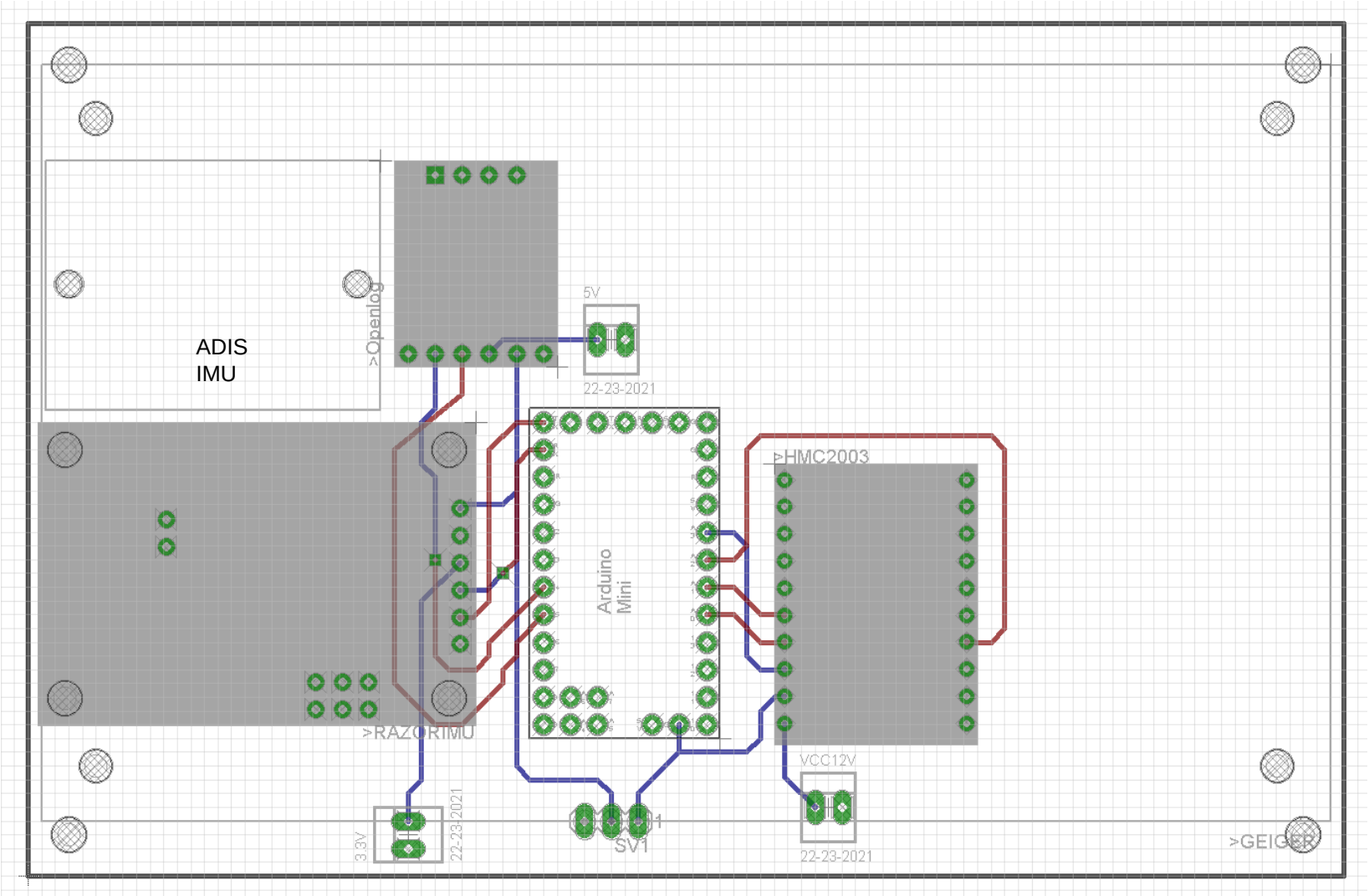

Software Design

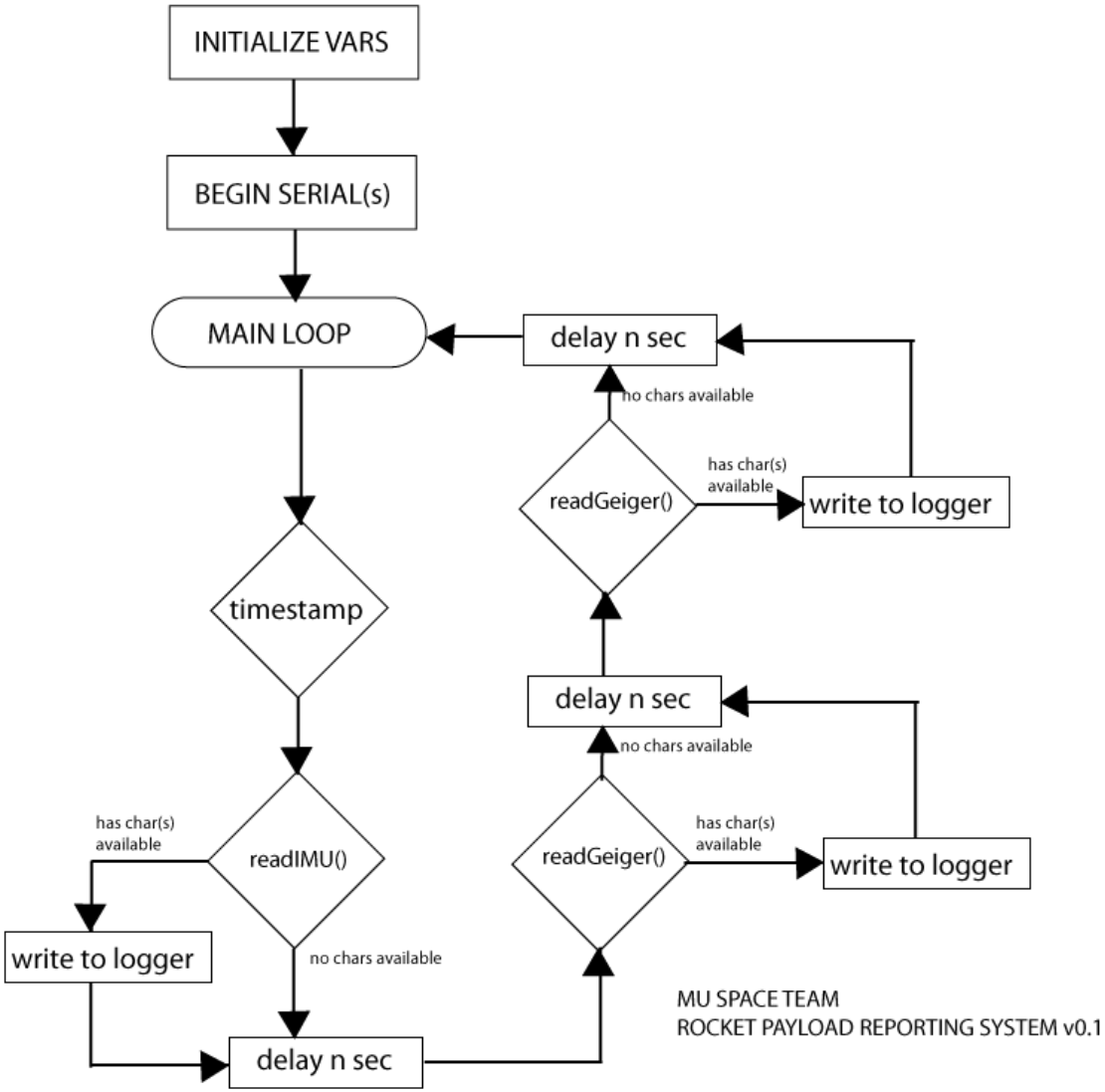

Mechanical Elements

- The PCB design is complete (excepting possible redundant mcu+logger).
- No mechanical elements have been purchased yet.

Electrical Elements

- All components have headers soldered.
- The OpenLogger will probably require a slightly different configuration.
- We'll need to add another voltage regulator.
- PCB v1 is complete

Software Elements

- Functions written for reading sensors and writing to sd card.
- Timestamp is included, but presently only a counter from power-on.
- The primary concern is our difficulties with the serial port emulator for the Razor IMU.

Subsystem Overview

- Subsystems
  - **data collection** – Geiger counter (CPS), Magnetometer (MAG), Razor (IMU), and ADIS 16300 (IMU)
  - **data storage** – microSD OpenLog
  - **power**

t

Data Collection

- Successful unit functionality tests complete for Magnetometer, Geiger, IMU.
- Geiger indicated presence of radiation (microsievert) proximity tests to strontium-90 and common smoke detectors.
- Integration tests are in progress and issues remain; successfully logging to sd card mag, mSv, and timestamp, but not IMU (YPR) values.
- The ADIS IMU has not yet been included in integration testing, though the balloon team has run successful unit tests.

Mag and Geiger Logging Successfully

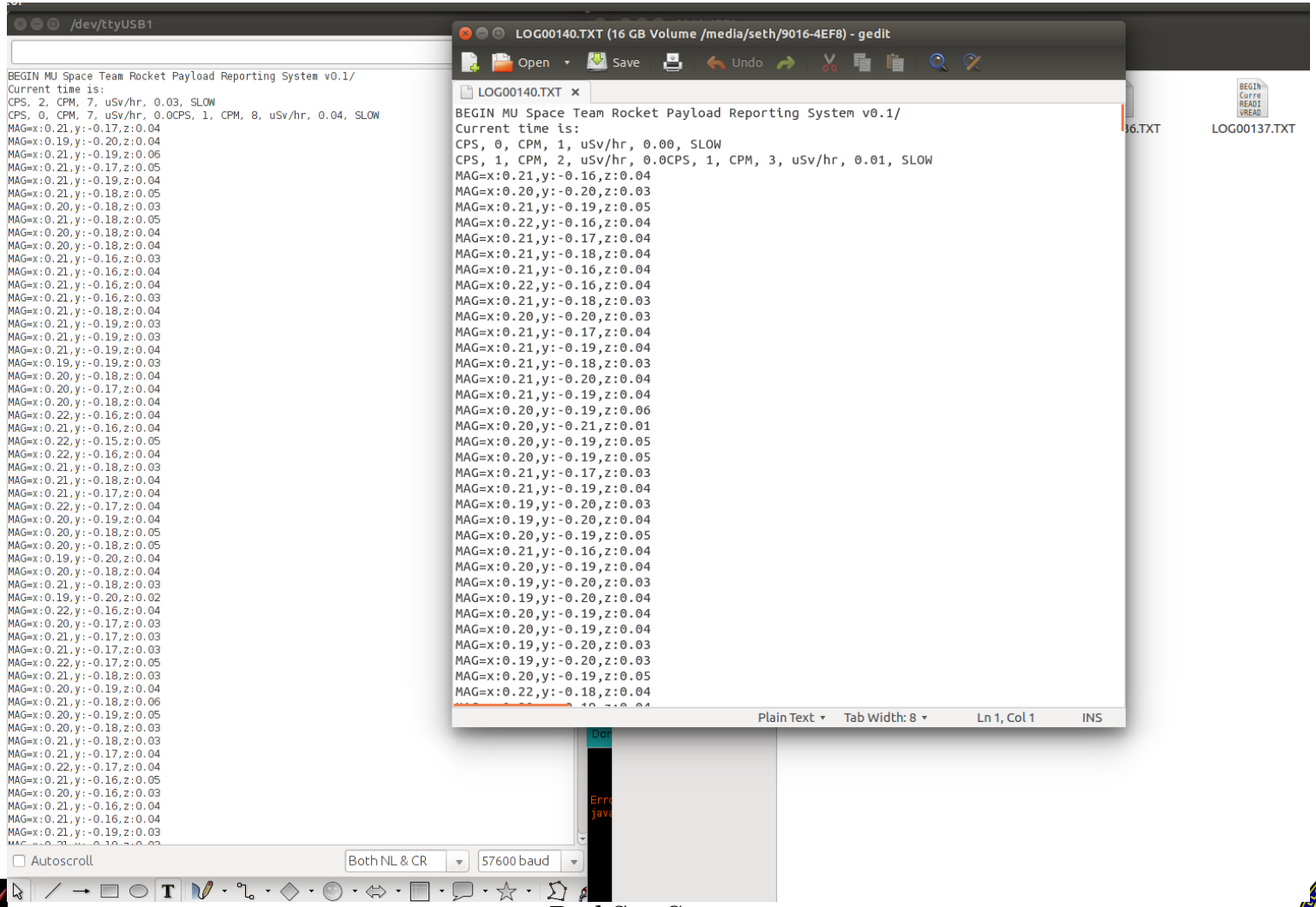

Current Data Collection Issues

- Data storage system requires hw serial port. No success running IMU or logger on AltSoftSerial or SoftwareSerial.

Data Storage

- Quick Status
  - Successfully logged data during live tests for Mag and Geiger.

    - The current pin header configuration need work.

    - Presently investigating ruggedization and redundancy

Data Storage Tests

- Logger functional.
- Successful IO tests (see previous pictures).
- Push-in test indicates logging continues when card is fully depressed.
- Jiggle and wiggle test did cause interruptions.

Power

- Quick Status
  - Breadboard prototyping received a single 5V input (USB) and successfully routed power to 3.3V, 5V, and 9V devices (the last through the use of a voltage booster).

3.0d Subsystem Testing Results – WVU-Tech

Zack Dixon

Alex Flores

WVU Tech Subsystem FBD

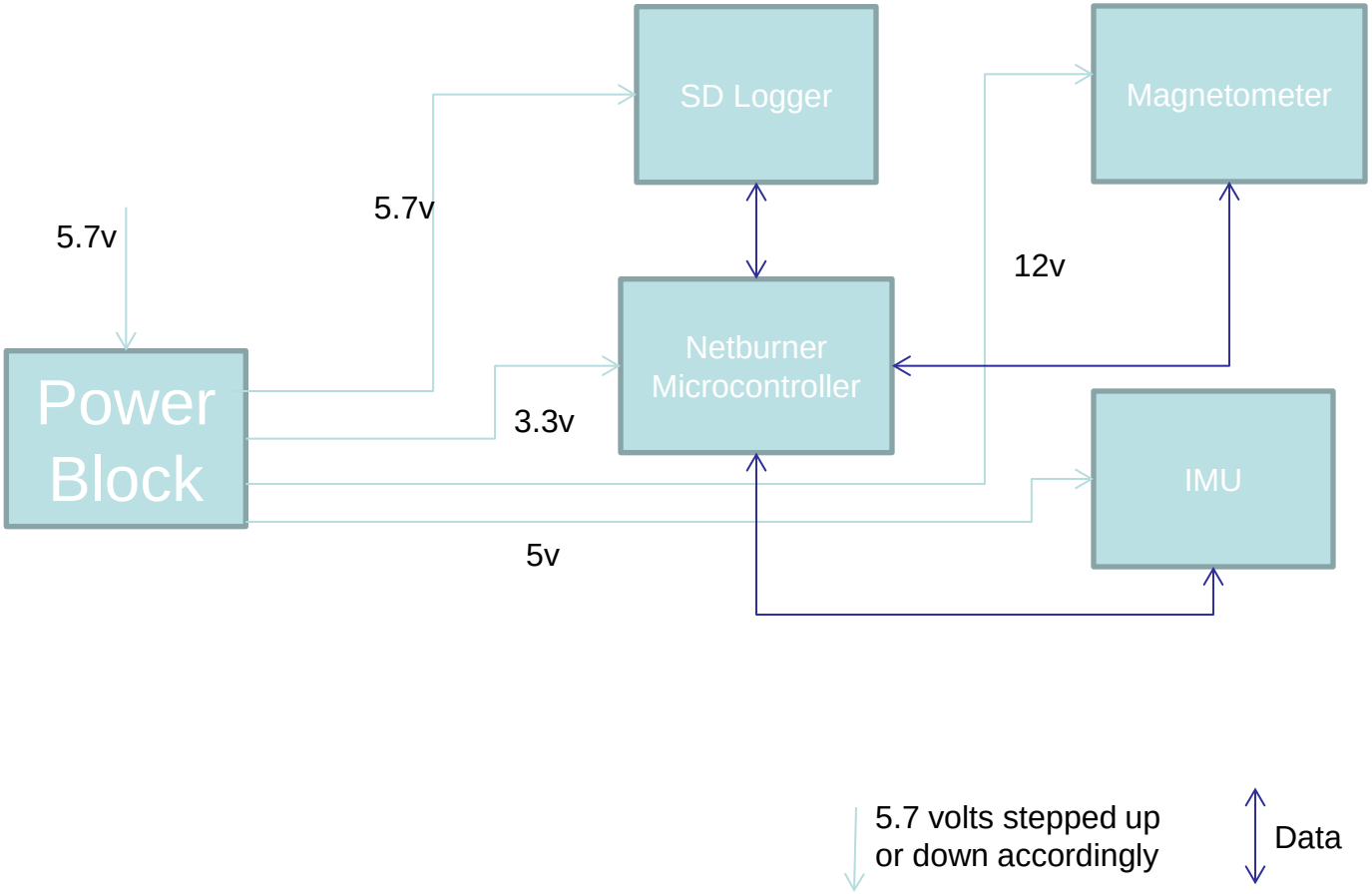

Electrical Schematic

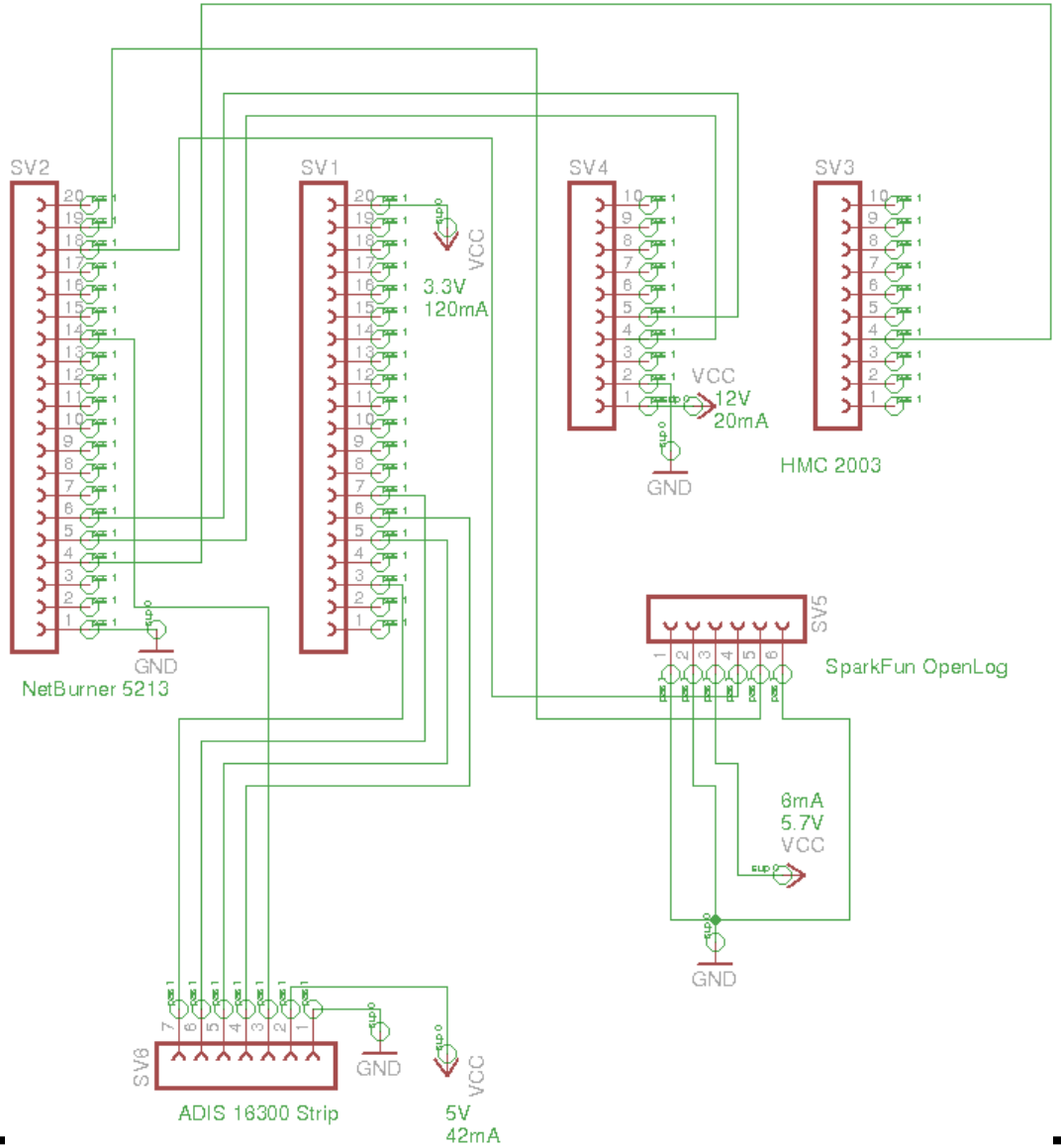

Software Flow Diagram

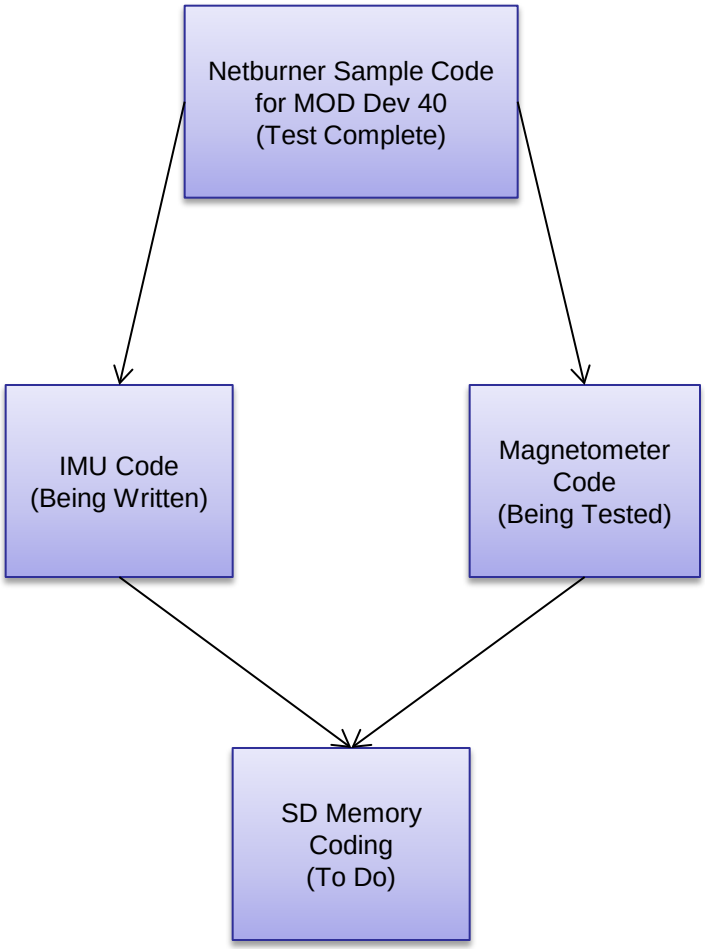

Mechanical Elements

- PCB needs to be manufactured from finalized design.
- Structural elements for components need to be acquired.

Electrical Elements

- Components need to be soldered to PCB after manufacturing.
- Netburner, IMU, SD Logger, are in house
- Pin headers need to be purchased for each component and soldered onto PCB
- Voltage regulators, resistors, and capacitors needed for step up and step down of voltages according to electrical design

Software Elements

- Software flow diagram shows that Magnetometer coding is being edited and tested.
- IMU coding is being developed for testing
- SD Data Logger coding is also being developed

Power

- Can only be tested with PCB integration
- Circuit needs to be designed for voltage regulators for IMU, Netburner, and Magnetometer individually.
- Voltage requirements shown in Functional Block Diagram

Data Collection and Storage

- Consist of Netburner Microcontroller and SD Data Logger
- Netburner is tested with every component
- SD card code is in development, code is needed to test.

Flight Dynamics

- Consist of IMU and Magnetometer
- IMU cod is in development
- Magnetometer coding is being tested.

Flight Dynamics

- Magnetometer tested with 3.3 volt power supply from Netburner with the code shown below.

```
for (i=0; i<1 ; i++){
         int countsx = ReadA2DResult(5) >> 3;
        Xvolts = ( ( float ) countsx / ( 4095.0 ) ) * 3.3;
        int countsy = ReadA2DResult(7) >> 3;
        Yvolts = ( ( float ) countsy / ( 4095.0 ) ) * 3.3;
        int countsz = ReadA2DResult(6) >> 3;
        Zvolts = ( ( float ) countsz / ( 4095.0 ) ) * 3.3;
        float XGauss = Xvolts * 2 / 4.5;
        float YGauss = Yvolts * 2 / 4.5;
        float ZGauss = Zvolts * 2 / 4.5;
        printf("%f Xvolts \n ", Xvolts);
        printf("%f Yvolts \n ", Yvolts);
        printf("%f Zvolts \n ", Zvolts);
        printf("%f Xgauss \n ", XGauss);
        printf("%f Ygauss \n ", YGauss);
        printf("%f Zgauss \n ", ZGauss);
        iprintf( "\r\n" );
```

Flight Dynamics

- Results showed that voltage supplied was too low for proper B-field Data.
- Magnetometer did respond to a magnet being moved around it.
- More Proper testing is needed at 12 volts power supply

3.0e Subsystem Testing Results – Shepherd

Rachelle Huff

Shepherd-SPACE: Electrical Design Elements

- We plan on using a double sided PCB for our payload.
  - The schematics can be seen with in the next few slides.
- There have been a few changes to the block diagram.
  - Changed the g-switch to T-3 mins early activation
  - The second Arduino has been removed
- We will be using T-3 mins early activation as seen in the block diagram shown in the next slide.

Shepherd-SPACE: Electrical Block Diagram

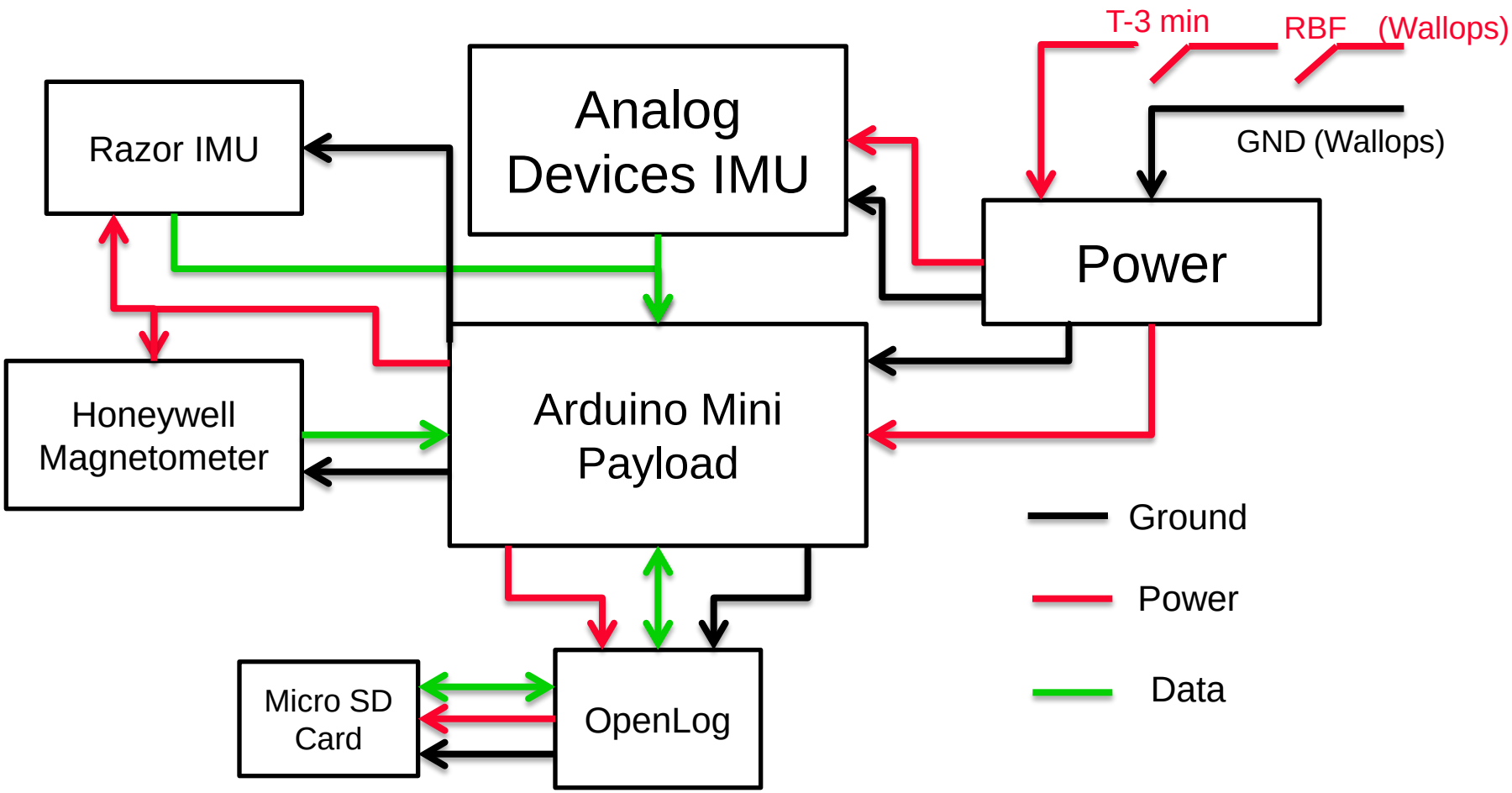

Shepherd-SPACE: Microcontroller Schematic

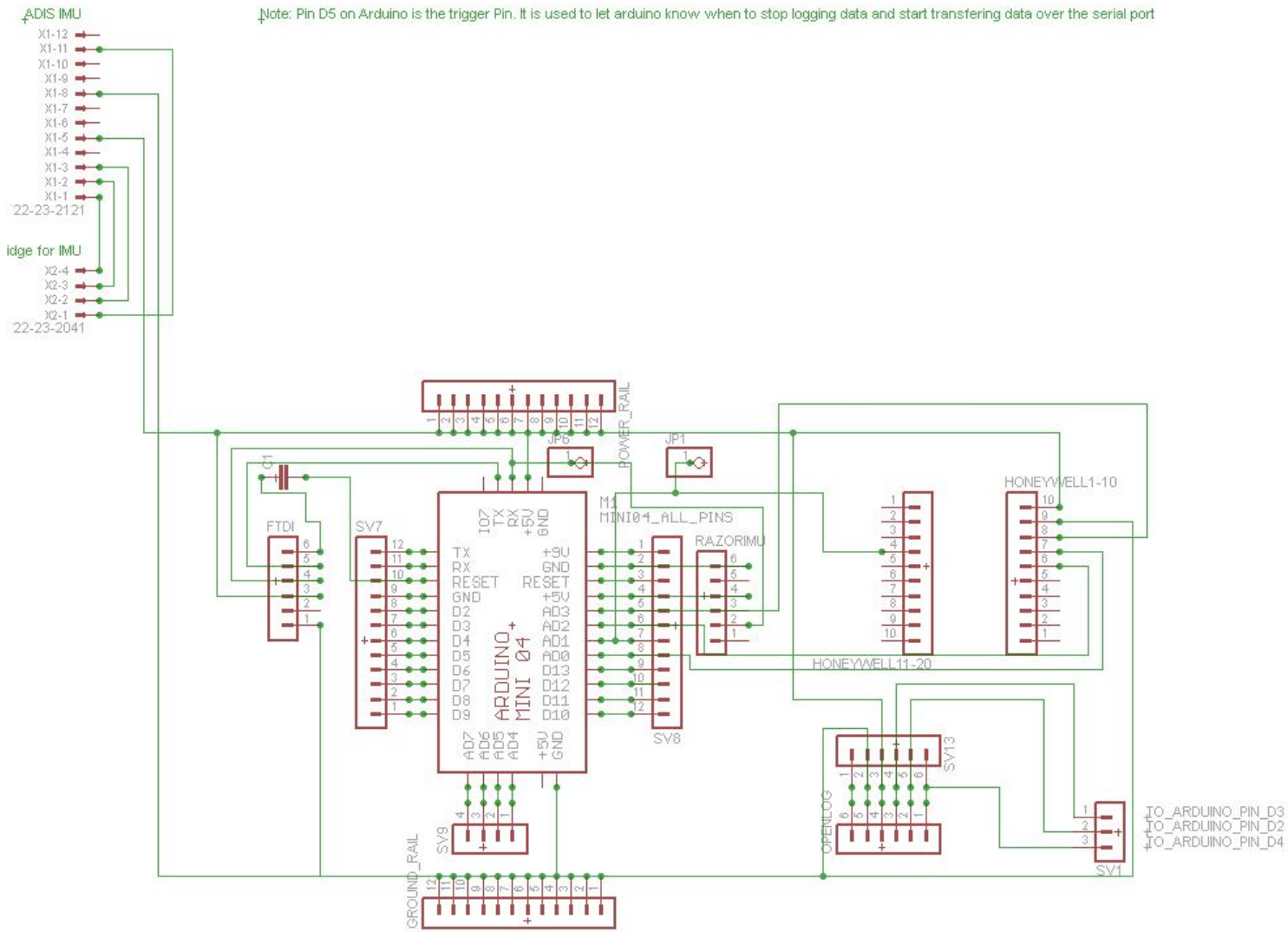

Shepherd-SPACE: Adaptor Schematic

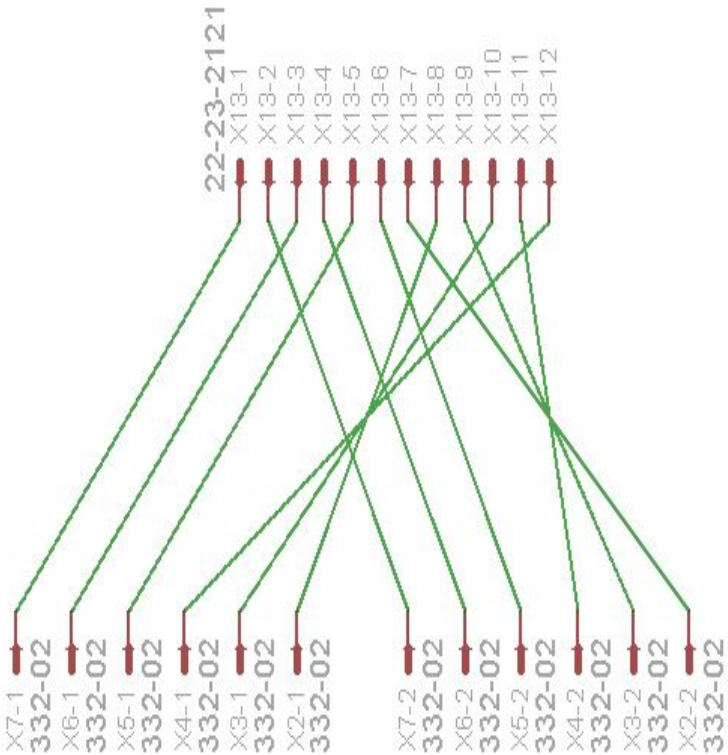

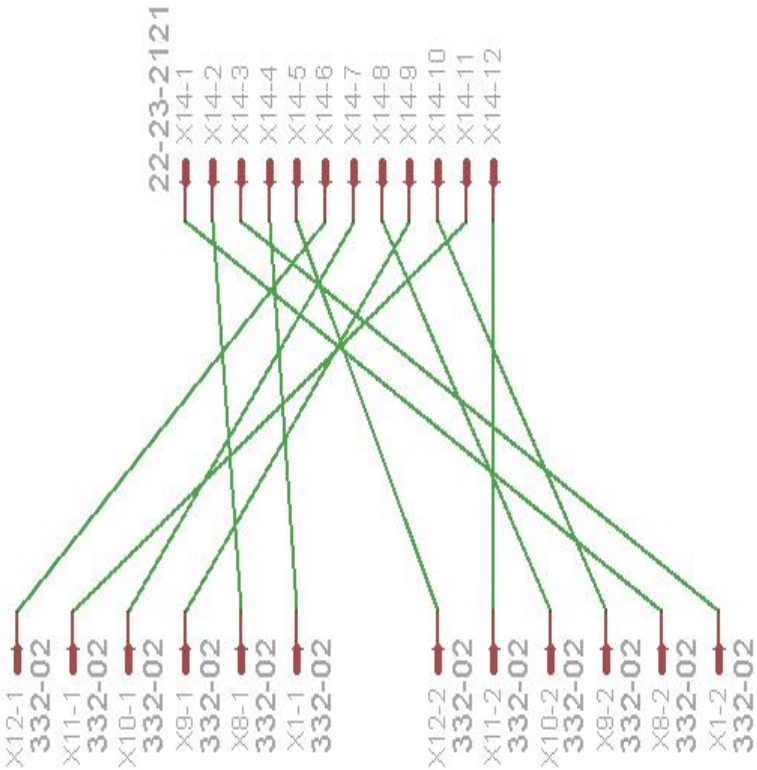

Shepherd-SPACE: Software Design Elements

- The programming for the payload is complete
  - We actually had to take out a chunk due to our removing the second Arduino.
- The payload will be receiving data from the IMUs and the magnetometer while storing said data.

Shepherd-SPACE: Program Flow Chart

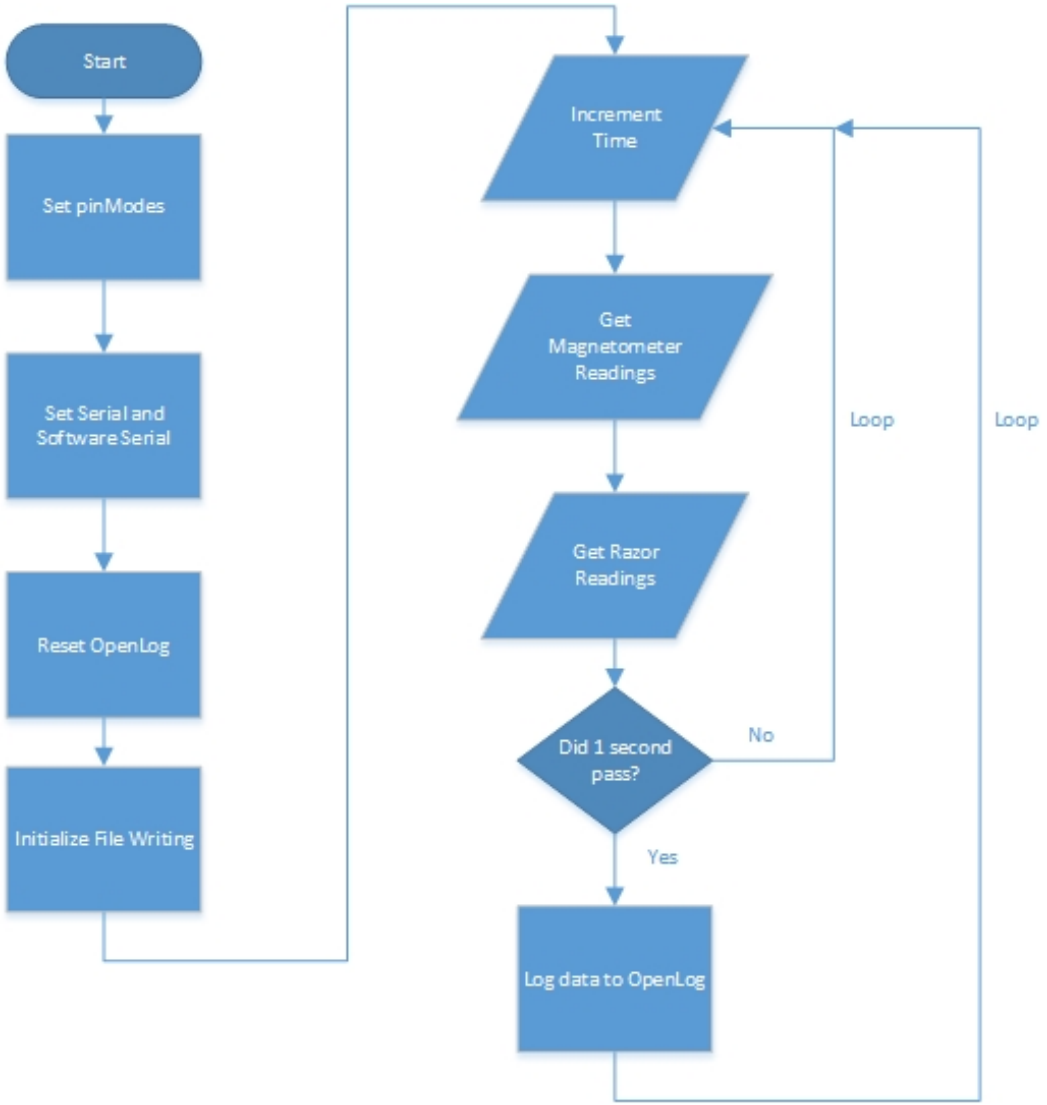

Shepherd-SPACE: Analysis Results

- No testing since the CDR.
- We do plan on doing a good amount of testing in the future.
- ***We need to collect more data so that we can be sure that the payload will work for the flight.***

Shepherd-SPACE: Prototyping Results

- We have the entire payload prototyped and on a bread board.
  - This is how we are able to test everything in our payload and see if it all works together.
- ***This testing will further us in our progression towards completing a successful payload.***

Shepherd-SPACE: Mechanical Elements

- The final microcontroller PCB, IMU adaptor PCB need to be manufactured.
- Mounting hardware for final payload needs to be procured.
- PCB will be made, then assembly of components.

Shepherd-SPACE: Electrical Elements

- Sensors, power connectors, Arduino, open log, and pin headers needs to be manufactured or soldered.
- A couple revisions in terms of simplifying power circuits and reducing budget need.
- PCB designs need converted to Gerber file format
- Power connectors, solder, electrical components need to be procured.
- We plan to solder everything as it should and connect the power connections.

Shepherd-SPACE: Software Elements

- The coding is already complete and further modifications are expected to be minimal.
- The main Arduino code depends on individual pieces for each sensor.
- Once we have all the hardware and software assembled on the PCB we will continue software verification

4.0 Plan for Full System Testing

Steven Hard

Plan for Subsystem Integration

- HAB launch will provide a full operational test of all subsystems
- Mock-up canister will be used to fit test our payload configuration
- Major hurdles:
  - Tethered balloon test
  - HAB launch
  - PCB design and fabrication
  - Travel for system integration and testing

5.0 Project Management Update

Steven Hard

WVWC Team

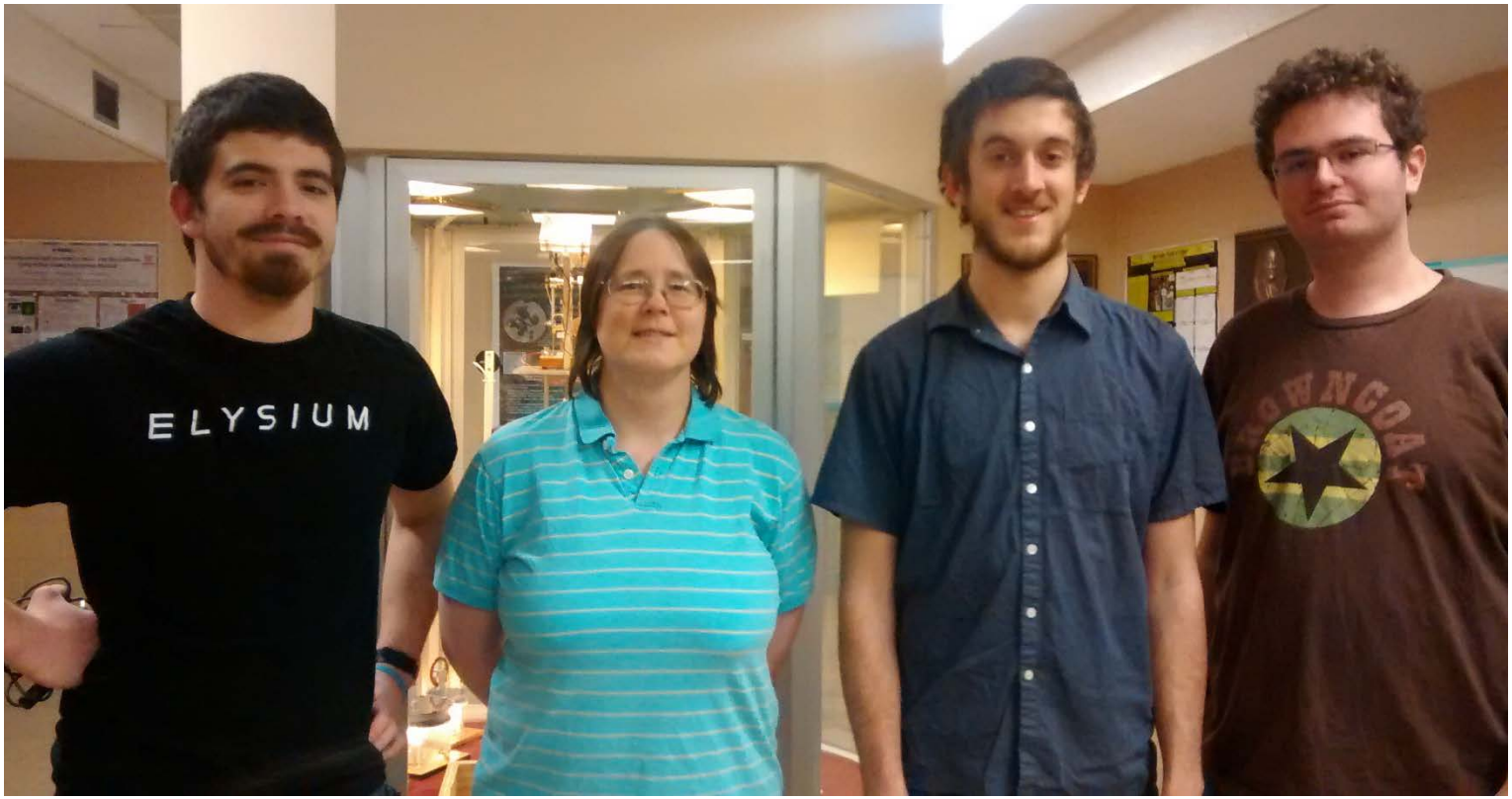

Marshall University Team

WVU-Tech Team

Shepherd University Team

WVU/FSU Team

Organizational Chart

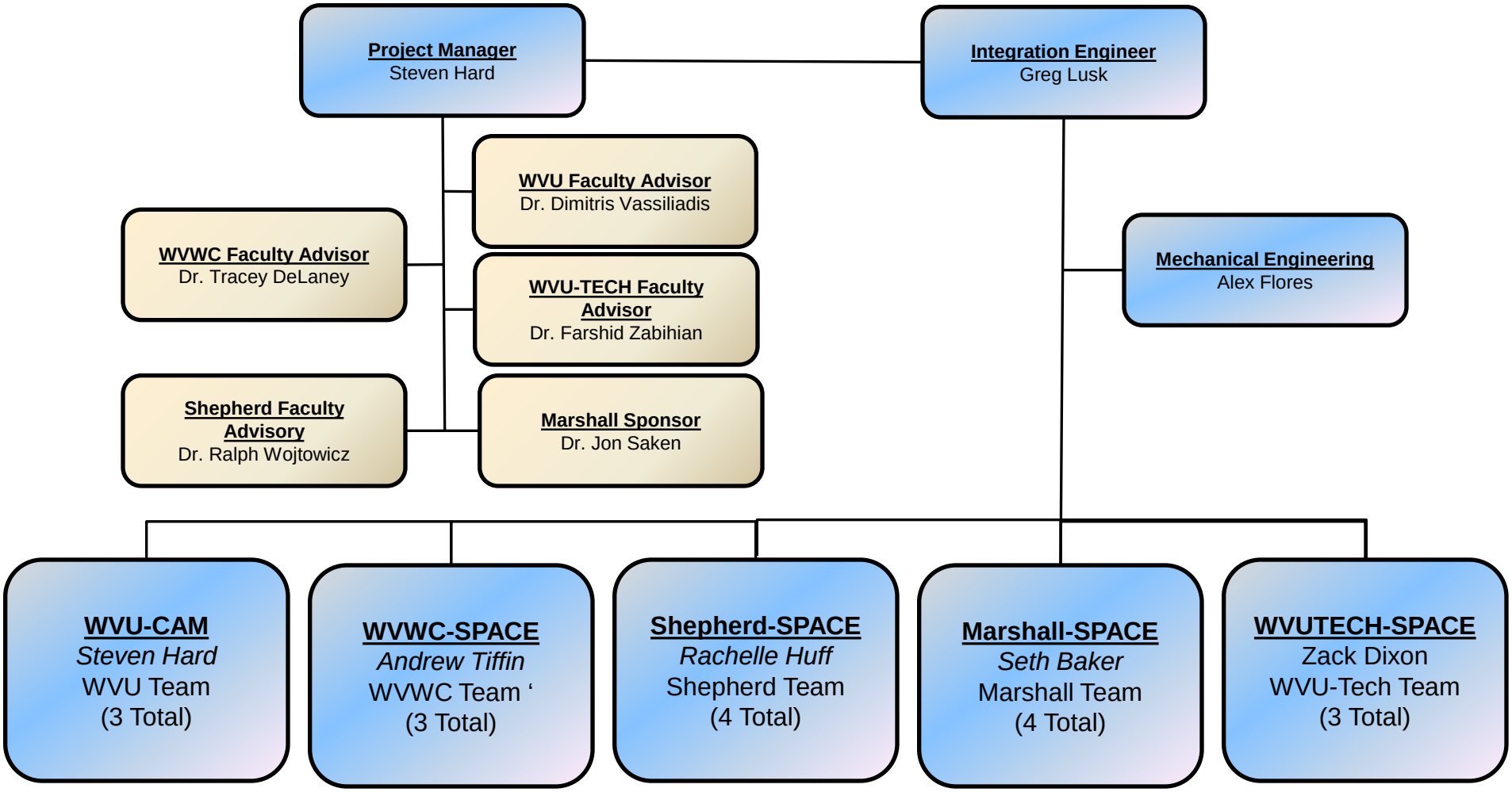

Program Management and Team Updates

- Team member updates
  - WVWC
  - Marshall
  - Shepherd
  - WVU-Tech

Schedule

- Major Milestones
  - Prototype high risk items (11/28/15)
  - Flight award announcement (1/16/2015)
  - Procure remaining components (1/17/2015)
  - Design PCBs (Week of 2/16/15)
  - STR (Week of 2/23/15)
  - High Altitude Balloon Launch (4/4/15)
  - ISTR (Week of 4/6/15)
  - Receive canister (Week of 4/20/15)
  - FMSR (Week of 5/20/15)
  - Deliver preliminary check-in document (Week of 6/4/15)
  - LRR (6/17/15)
  - Travel to Wallops (6/18/15)
  - Launch (6/25/15)*

* Tentative, no guarantee – small chance launch could get cancelled due to weather or other unforeseen delays

6.0 User Guide Compliance

Steven Hard

User Guide Compliance

Requirement	*Status/Reason (if needed)*
Center of gravity in 1" mid-can?	With 1’
Contained in can	
Connected to can by 4/5 bulkheads on top and bottom only	
Mass at 10±0.2lbs (half can)	Currently 10 lbs with ballast for 0.2lb tolerance
Shared canister clearance	1” separation between payloads – needs verified
No voltage on the can	No opportunity to check yet
Activation wires at least 4 ft	
Activation wire at least 24 gauge	22 gauge
Early Activation: current < 1 A	No opportunity to check fully integrated current draw yet
T-0 Activation: current < .1 A	Not using
Battery Type	Ni-mh (will not charge at Wallops)

Shared Can Logistics

- Sharing with Temple University
  - Team Lead:
- Plan for collaboration
  - Exchanging emails to share designs
  - No fit check scheduled before June
- WV experiment will be on bottom
- Mid mounting plate will be used
  - Need to review mounting plate design
- Combined mass (mounting plate/canister included)
  - 10 lb
- WVU-Cam experiment will access to the following port
  - Optics port

grandpmr.com

Budget

- All experimental components have been procured/delivered
- PCBs and components are only purchases yet to be made

Margin:	0.3	Budget:	$1,300.00	Last Update:	9/30/2010 11:50
WV RSC'15 Payload					
Item	**Supplier**	**Estimated, Specific Cost**	**Number Required**	**Toal Cost**	**Notes**
Linear Actuator	Firgelli	$120.00	1	$120.00	1 mini tracked linear actuator
Raspberry Pi	DigiKey	$35.00	2	$70.00	1 for testing
Pi NoIR Cam	Adafruit	$25.00	2	$50.00	1 for testing
Mini WebCam	Amazon	$90.00	2	$180.00	1 for testing
Magnetometer	Honeywell	$220.00	1	$220.00	Marshall Payload
Inertial Measurement Unit (s)	Analog Devices Sparkfun	$150.00	2	$300.00	Marshall Payload
Microcontroller	DigiKey	$25.00	1	$25.00	Marshall Payload
Printed Circuit Boards	Advanced Circuits	$33.00	4	$132.00	1 board/SPACE
Misc. Electronics (R,L,C)	DigiKey	$50.00	4	$200.00	4 misc/SPACE
Testing Materials	Various	$75.00	4	$300.00	Testing equipment for each team
Total (no margin):					$1,597.00
Total (w/ margin):					$2,076.10
Total Spent:					$1,265.00
Total Balance:					$811.10

Worries and Concerns

- Biggest concerns:
  - Not all SPACE experiments have demonstrated working prototypes
  - Behind schedule on PCB designs
- Mitigation plans:
  - Face-to-face meetings with teams needed technical assistance
  - Utilize knowledge/expertise of teams that are proficient in PCB design software and other expert sources

Conclusions

- Continued software testing with prototype designs
  - Integrated payload configurations causing some software debugging issues
- Finalized electrical schematics and PCB designs
  - Ran into some snags with Gerber file conversions for submission to PCB vendor