WV Rocketeers

Integrated Subsystem Testing Review

WVU WVU-TECH
FSC SU MU WVWC
JFFL NASA IV&V

Steven Hard, Zack Dixon, Greg Lusk, Rachelle Huff, Seth Baker, Andrew Tiffin

4/13/15

Presentation Outline

- Section 1: Mission Overview
- Section 2: Subsystem Status
  - 2.0a: WVU-CAM
  - 2.0b: WVWC-SPACE
  - 2.0c: Marshall-SPACE
  - 2.0d: WVUTech-SPACE
  - 2.0e: Shepherd-SPACE
  - 2.0f: PDS
- Section 3: Integrated Subsystem Status
- Section 4: Full System Integration Plan
- Section 5: Project Management Update

1.0 Mission Overview

Steven Hard

Mission Overview

- The objective of the WV RSC'15 mission will be to develop and test several science and engineering experiments for space operations
- Shall capture NIR Earth images from space, measure magnetic field of Earth, gather redundant flight dynamics data, & detect ionized particles
  - Need access to optics port
- Expect to validate the NOAA magnetic field model using data taken during the flight and to assess vegetation health with Earth images
- Benefits SmallSat community – COTS orientation estimation
- Elementary school systems – promote STEM careers and inspire next generation

Concept of Operations

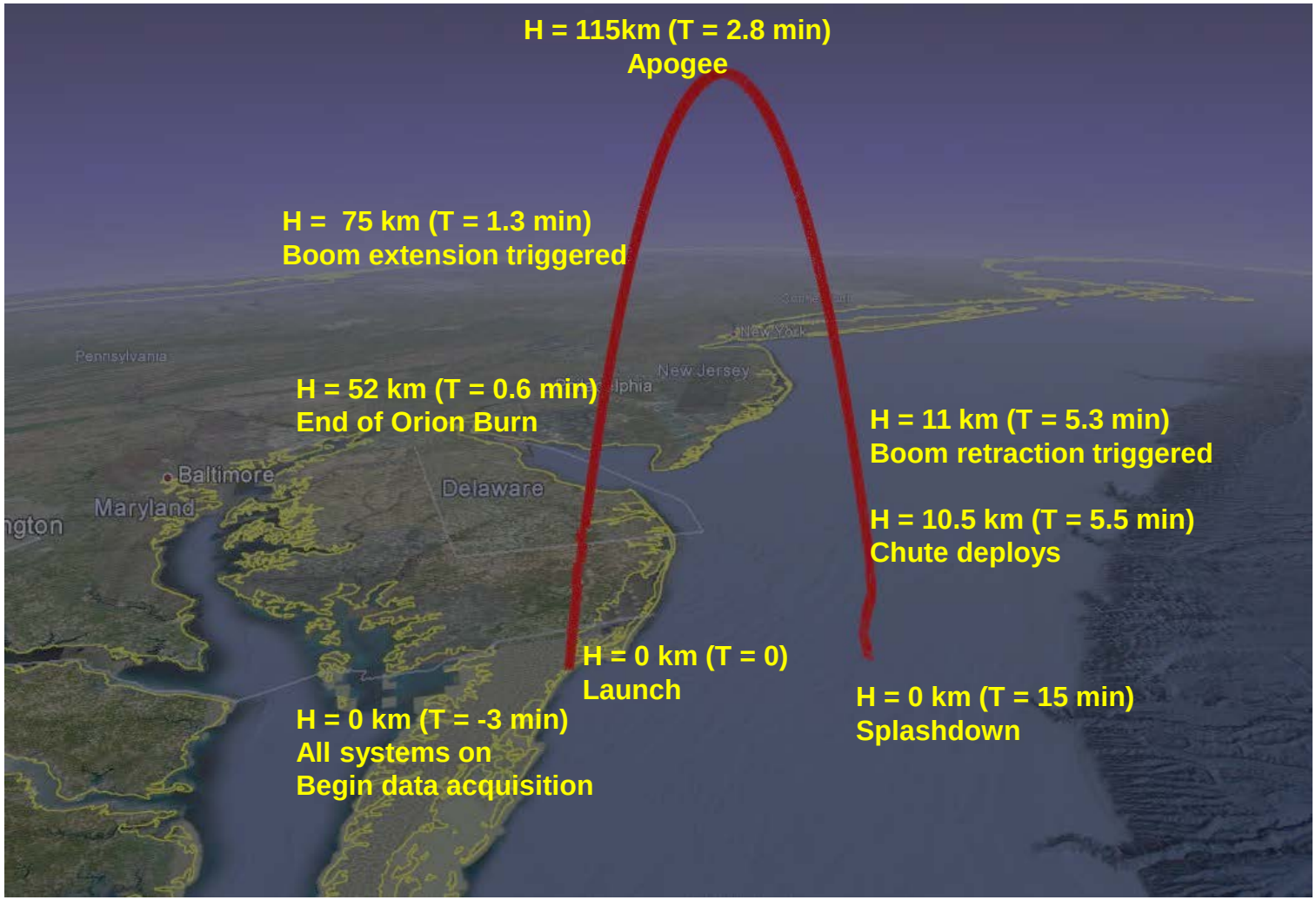

2.0 Subsystem Status

Steven Hard

Subsystem Overview

- Subsystems:
  - WVU-CAM (access to Optics Port)
  - WVWC-SPACE
  - Marshall-SPACE
  - WVUTech-SPACE
  - Shepherd-SPACE

  } SPACE (4x)
  - Power Distribution System (PDS)
  - Structural Support and Positioning (SSP)

2.0a Subsystem Testing Status: WVU-CAM

Steven Hard, Greg Lusk

Subsystem Testing Status: WVU-CAM

1.0 Cameras

75%

These tests will verify that all cameras are working proper and ready for full simulation test

Prototype verification testing of both Raspberry Pi camera (RPi) and NIR camera proved to be successful

Payload usb video cameras (UVCs) use same interface as NIR camera and were successfully tested as well

Additional sensitivity tests of camera configuration variations (resolution, fps, file size) will be performed this week (4/13)

```
system("raspivid -o testvid.h264 -w 1920 -h 1080 -fps 30 -t 5000");
system("avconv -f video4linux2 -r 30 -t 5 -s 640x480 -i /dev/video0 linksprite0.avi");
```

Subsystem Testing Status: Camera Testing

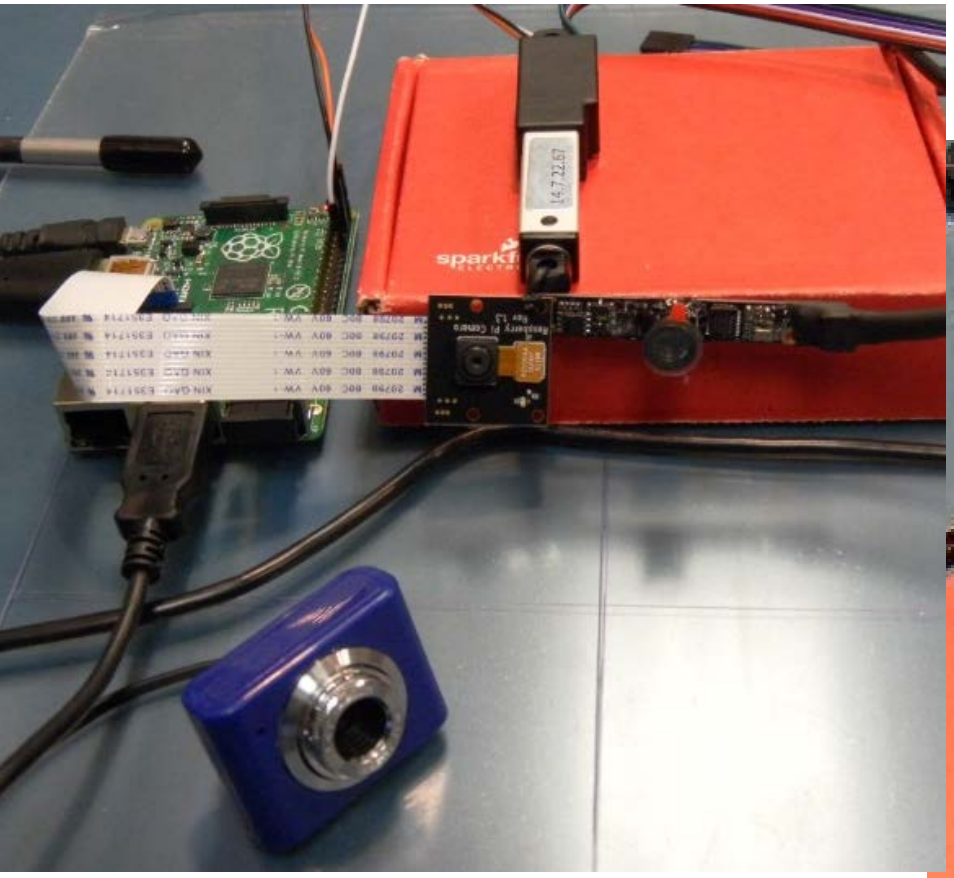

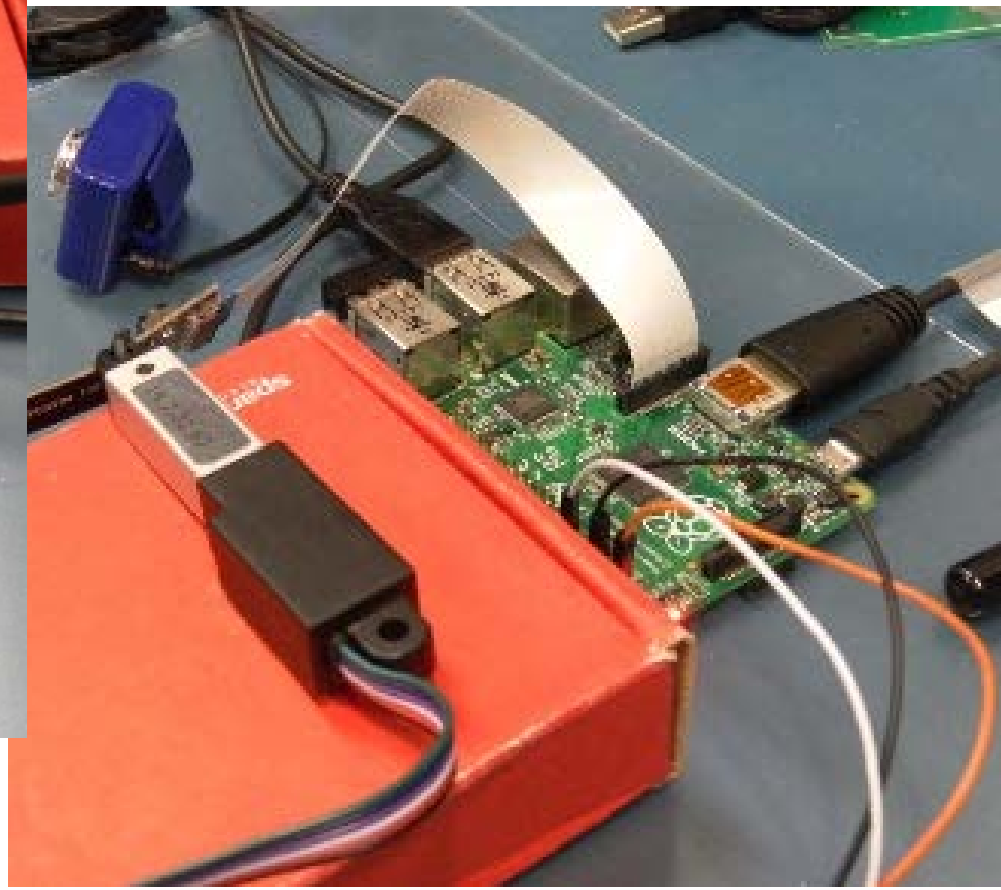

Subsystem Testing Status: WVU-CAM

2.0 Linear Actuator

75%

This will verify that all cameras are working proper

Prototype verification testing of linear actuator using Raspberry Pi GPIO revealed a need to implement a logic-level shifter circuit

Cameras will be mounted on linear actuator using 3D printed bracket and tested week of 4/27

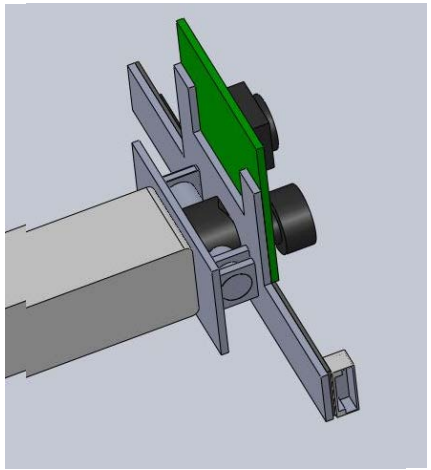

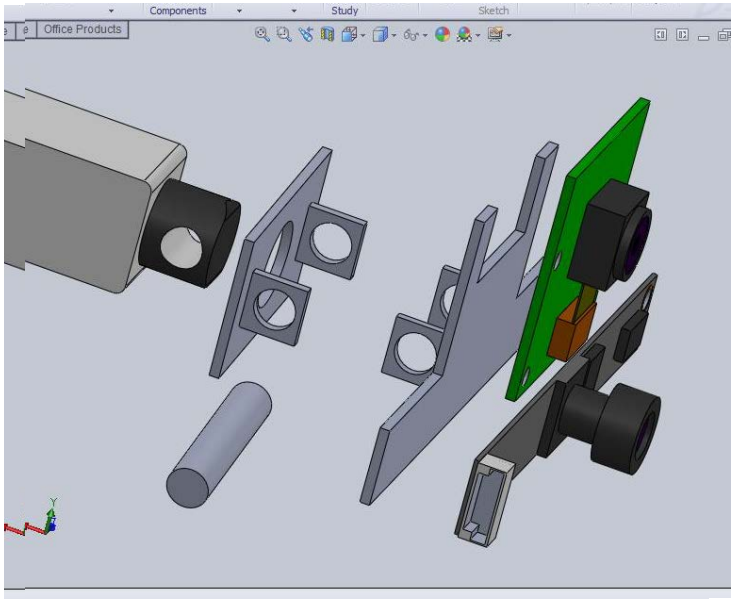

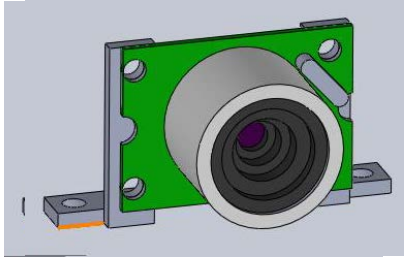

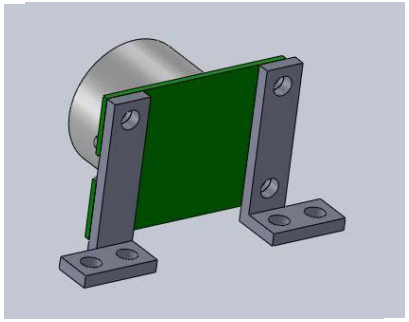

2.0b Integrated Subsystem Testing Status: WVWC-SPACE

Andrew Tiffin, Eric Kramer, Paul Mallory

Changes since STR

- Finished first PCB and starting testing.
- Finished all code for; magnetometer, Geiger Counter, IMU.
- Tested Payload on bread board on Balloon Launch, but had issues with powering our payload, which has been fixed.

Completed PCB

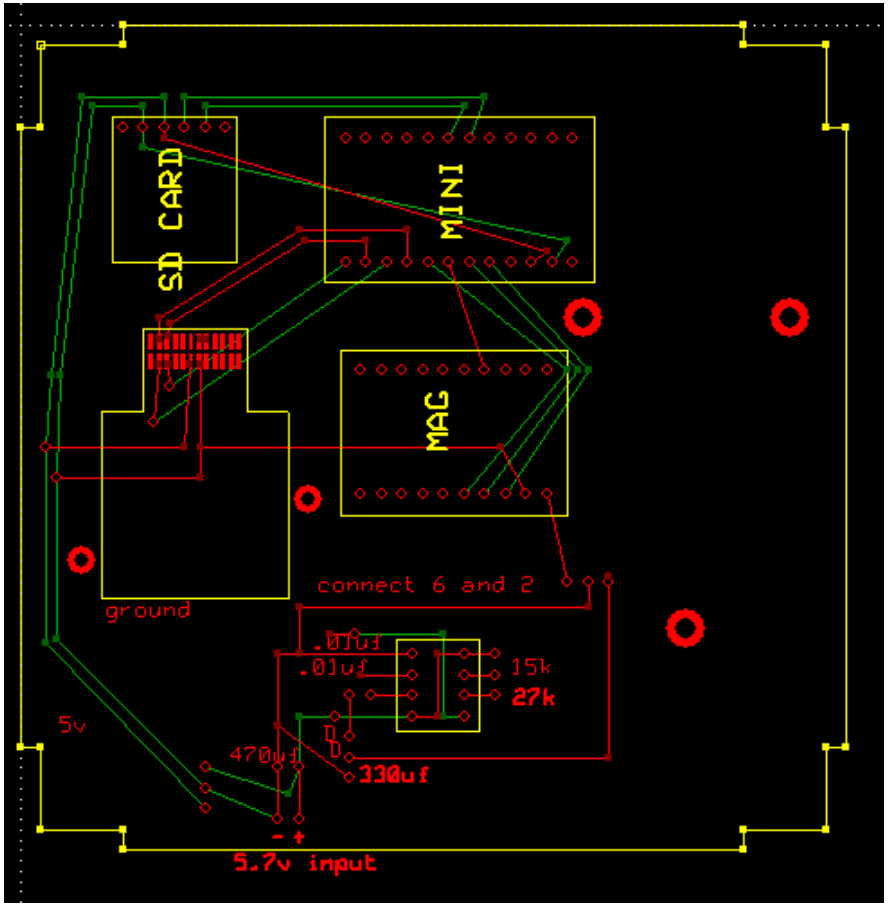

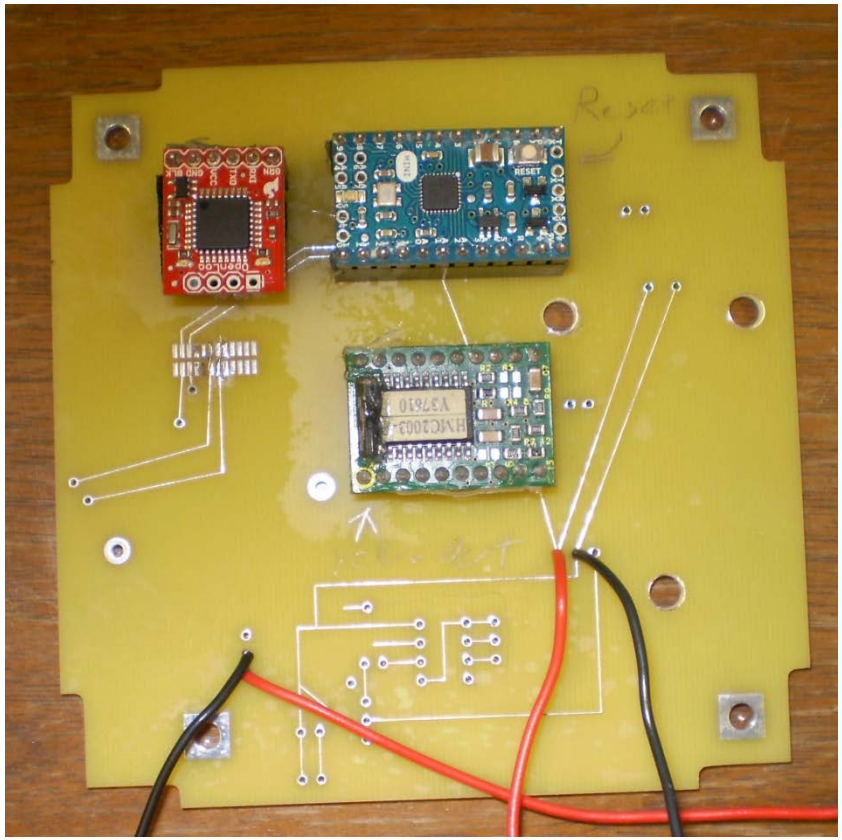

Subsystem Testing Status: Arduino mini

Arduino Subsystem

		100%	

Arduino has been tested and is functioning properly
-successfully uploads code
-sends data to the open log device
-reads data from Geiger, magnetometer and IMU

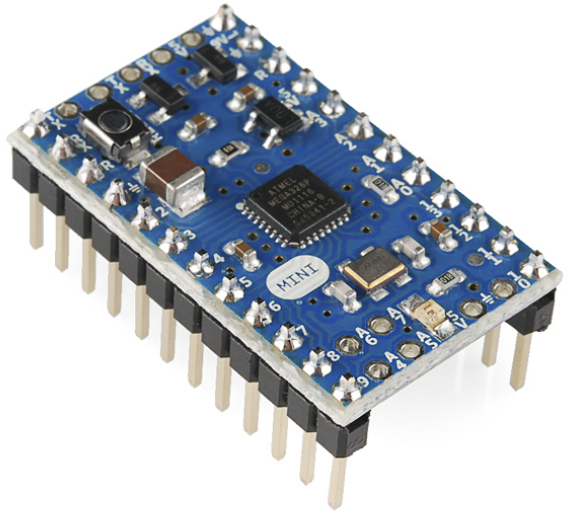

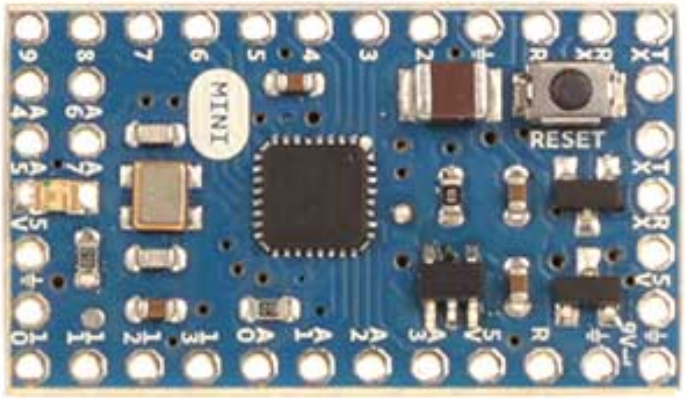

Subsystem Testing Status: Geiger Counter

Geiger Counter Subsystem

-The Geiger counter code is compiled and working properly
-The Geiger counter has been tested with a Cesium-137 source and is functional
-Below is a graph of counts per minute vs. distance, showing that radiation decrease at a rate of 1/r^2

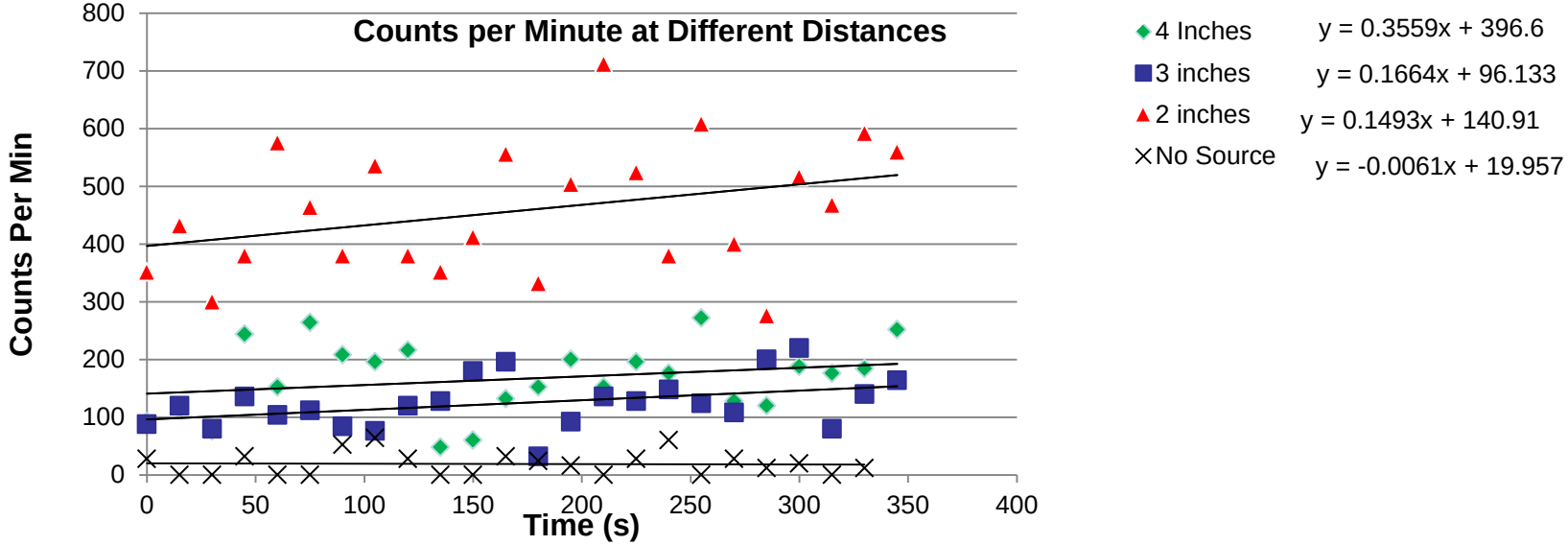

Subsystem Testing Status: Magnetometer

Magnetometer Subsystem

		100%	

-Magnetometer code is works great.
-Data has been collected from the magnetometer and is shown below.

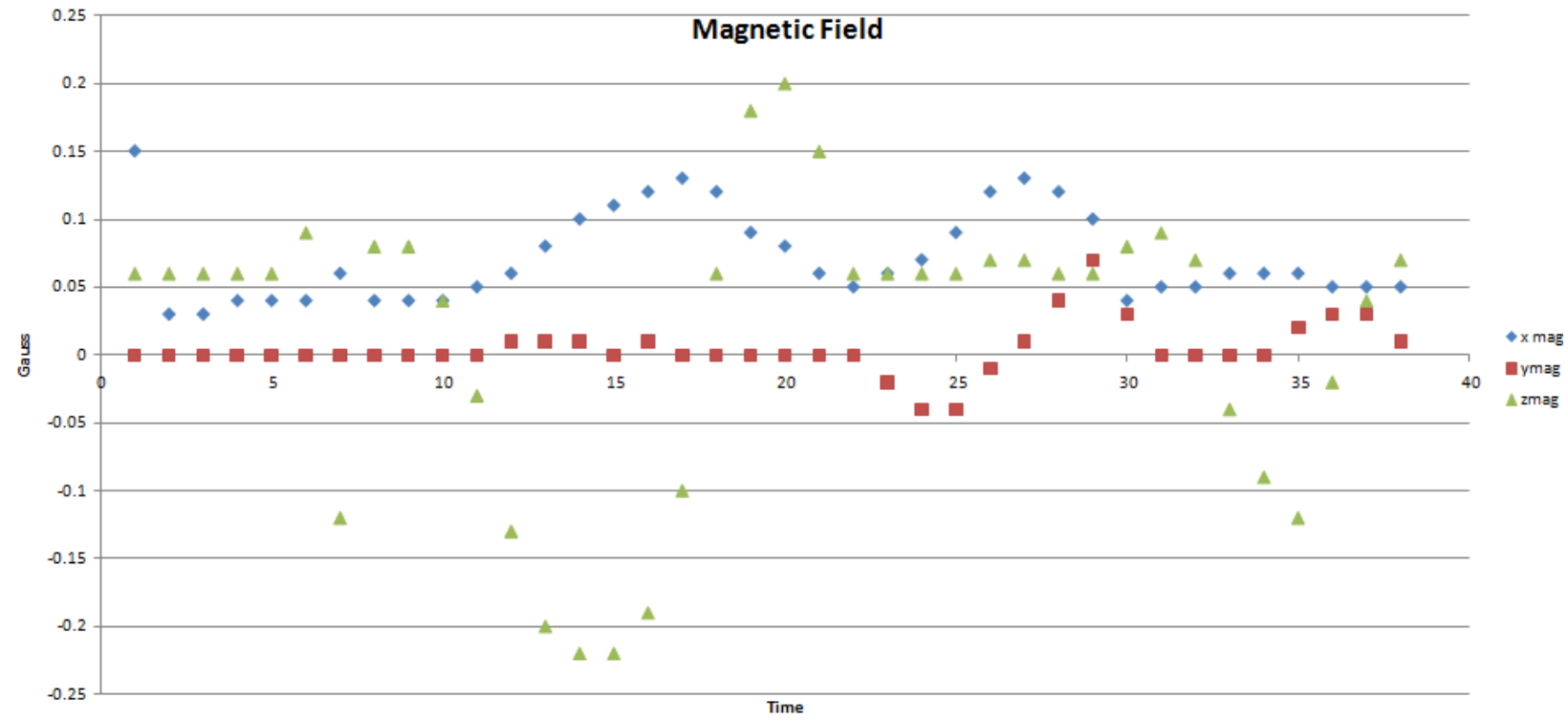

Subsystem Testing Status: IMU

IMU Subsystem

		90%	

-Code for IMU has been finished and works great.
-We still are waiting on a order including a Samtec connecter for the IMU to solder to our PCB.
- Unfortunately we didn't recover any data from the balloon launch due to power issues.

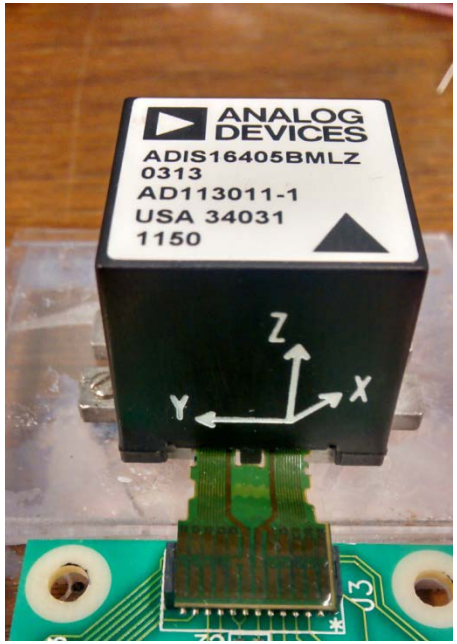

Voltage boost Converter

- This is a circuit that will be used to boost the 5.7v input to 9v to power our Geiger counter and magnetometer.
- We are still waiting on parts for this as well.

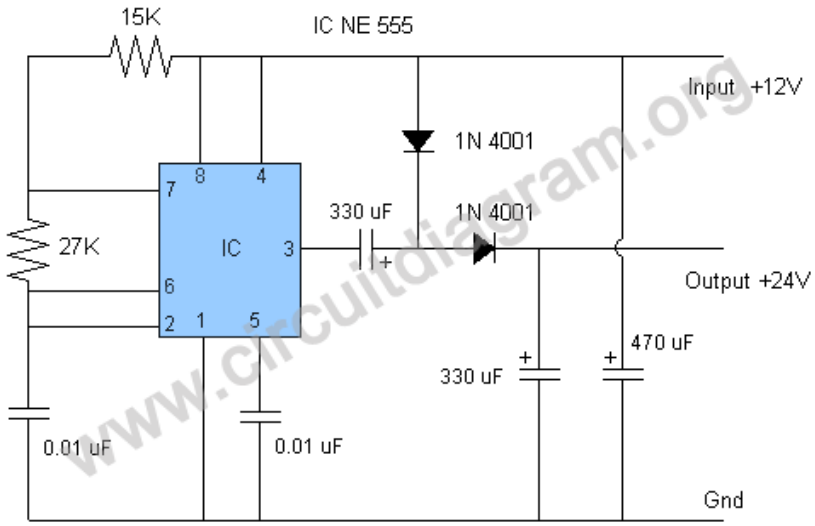

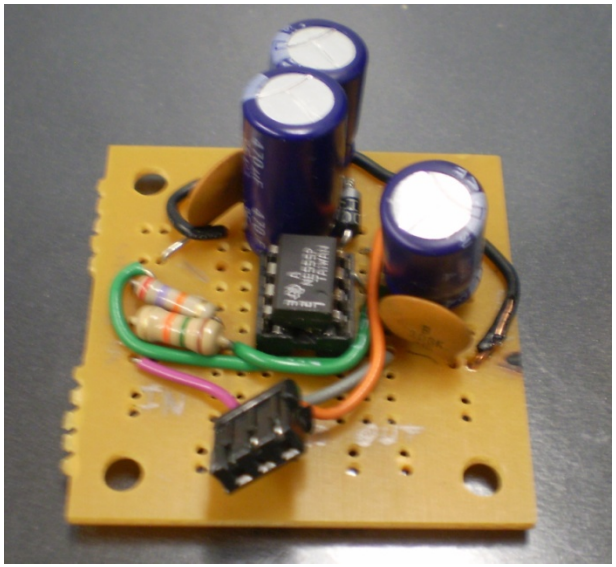

Summary of Progress

- Finished PCB
- All Subsystem Tested
- Need to finish soldering boost converter to PCB

Mechanical Design

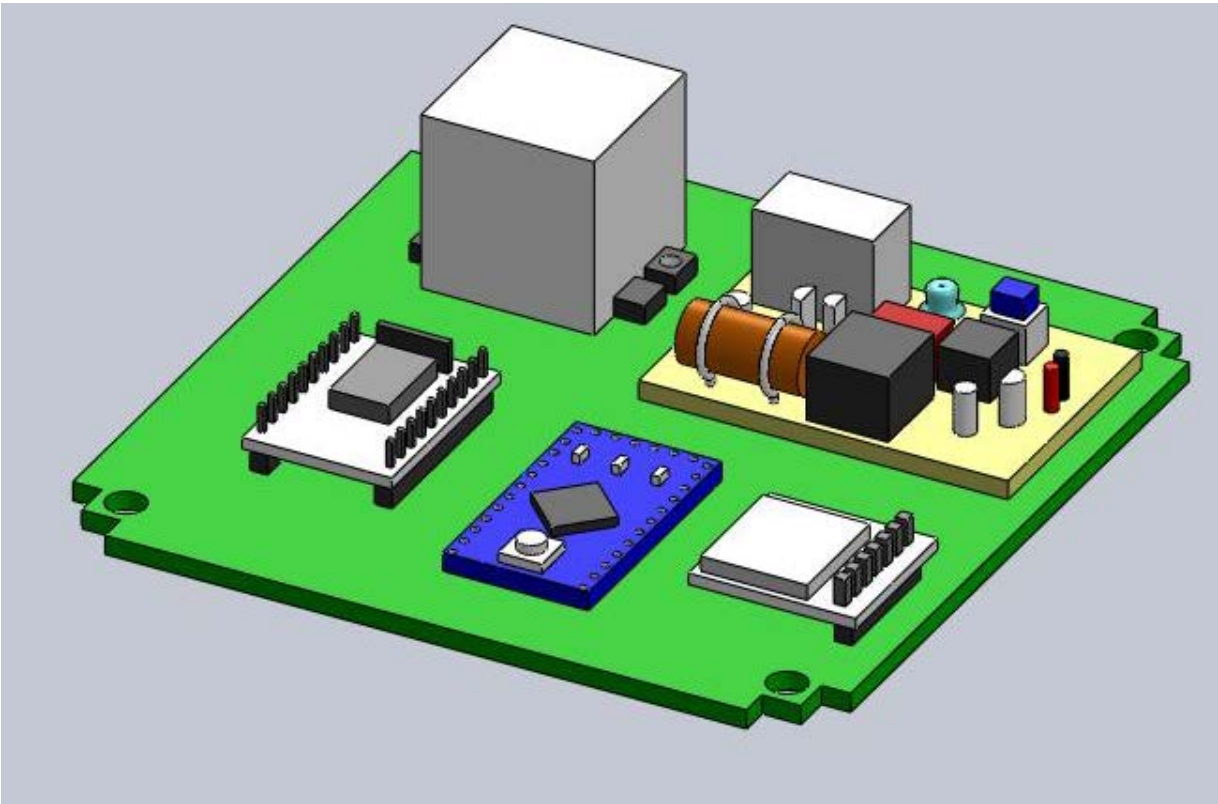

2.0c Subsystem Testing Status: Marshall-SPACE

Seth Baker, Nick Zarilla

Software Testing

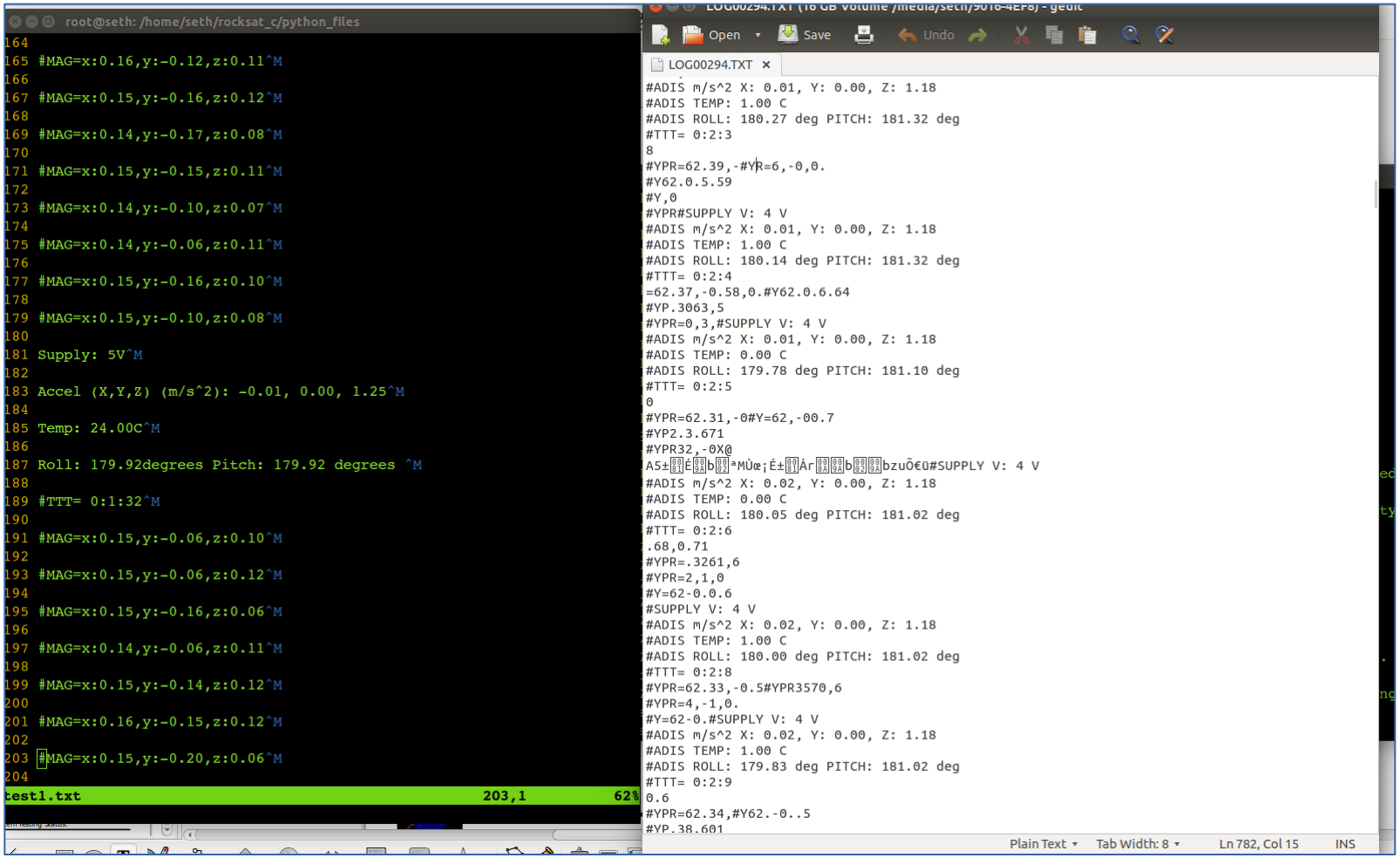

Software Testing

- Serial data (on the left) is much tidier than OpenLog data due to requirement to use data buffers.
- Primary areas for improvement of OpenLog data:
  - Fix formatting for #YPR values (Razor IMU output)
  - Increase reporting frequency for Geiger counter
  - Figure out why we're getting occasional garbled lines
  - Ensure temp remains correct (previously had incorrect vals, but this issue resolved itself, which is troubling)

Subsystem Prototype Testing

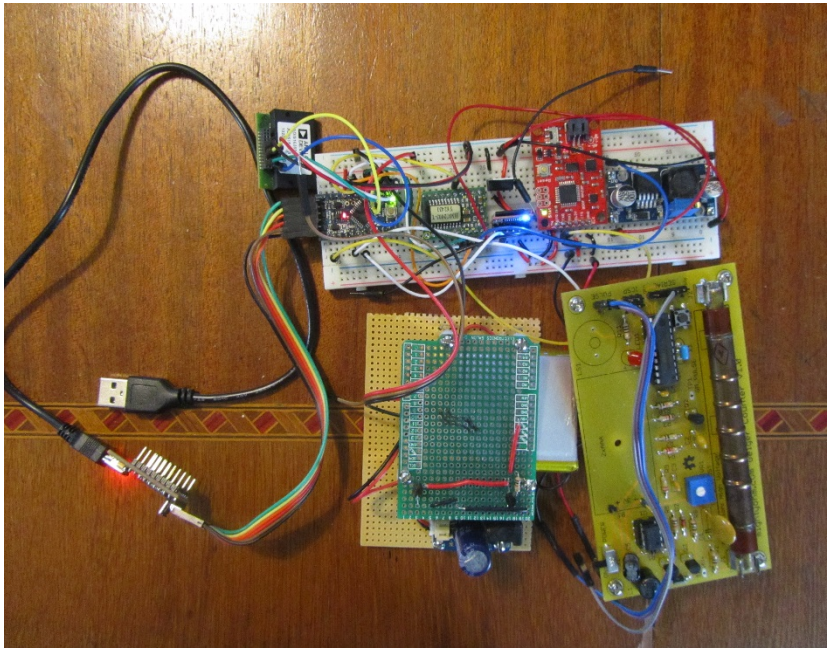

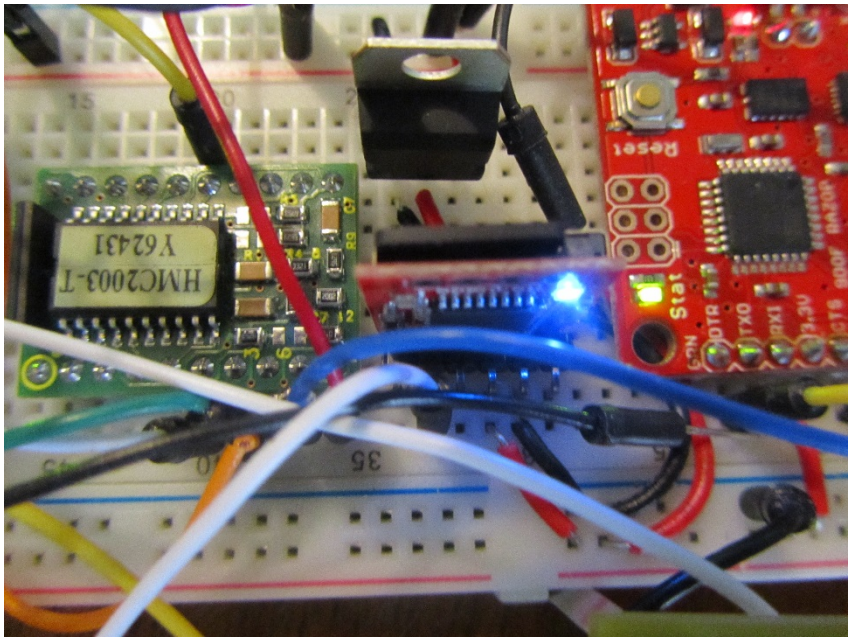

- Running off battery power
- OpenLog header pins need de and resoldered
- Looks big and messy now, but we have room to spare on our PCB.

Changes since STR

- Solved the SoftwareSerial emulator moving Razor IMU back to hardware serial and OpenLog to SoftwareSerial
- Integrated Analog Devices 16300 IMU into payload
- Added a battery circuit for wireless testing

Subsystem Testing Status:

IMUs

Razor and AD IMU are integrated and logging values, but these devices have not been calibrated.
Their values disagree because they won't be properly aligned until added to the payload.
AD IMU is reporting incorrect temperature data.
Both were responsive to movement during unit tests, though the Razor had a slight delay.
AD Z acceleration value reports 1.25; again, calibration is required.

Subsystem Testing Status:

Mag & Geiger Counter

As previously reported, Geiger counter detected increased uSV/hr in presence of strontium-90. We're presently searching for another calibrated counter to compare values against.
Mag continues to function correctly. Once PCB is received, magnetometer will be calibrated w/ assistance (from someone who has already done it!)

Subsystem Testing Status:

MCU, source code, data logger

Longest continuous successful logging test so far: 14:00
YPR values for Razor IMU still have some formatting errors; plan to correct involves refactoring buffer code.

Data is logged at approximately 1 second intervals, except the Geiger counter, which is presently returning values between 30s to 1.5min. This is likely a code issue which will be addressed in the coming weeks.

The OpenLog doesn't function with a baud rate > 9600

Summary of Progress

- All systems are logging values while running off battery power, but the data is occasionally ugly.
- PCB design is complete and ready to be submitted for fabrication.
- All components are logging values to the micro SD card.
- Once PCB is received, magnetometer will be calibrated w/ assistance (from someone who has already done it!). IMUs will also be calibrated.
- Software refactoring and refinement will continue over the next 1-2 months.

Mechanical Design: Top

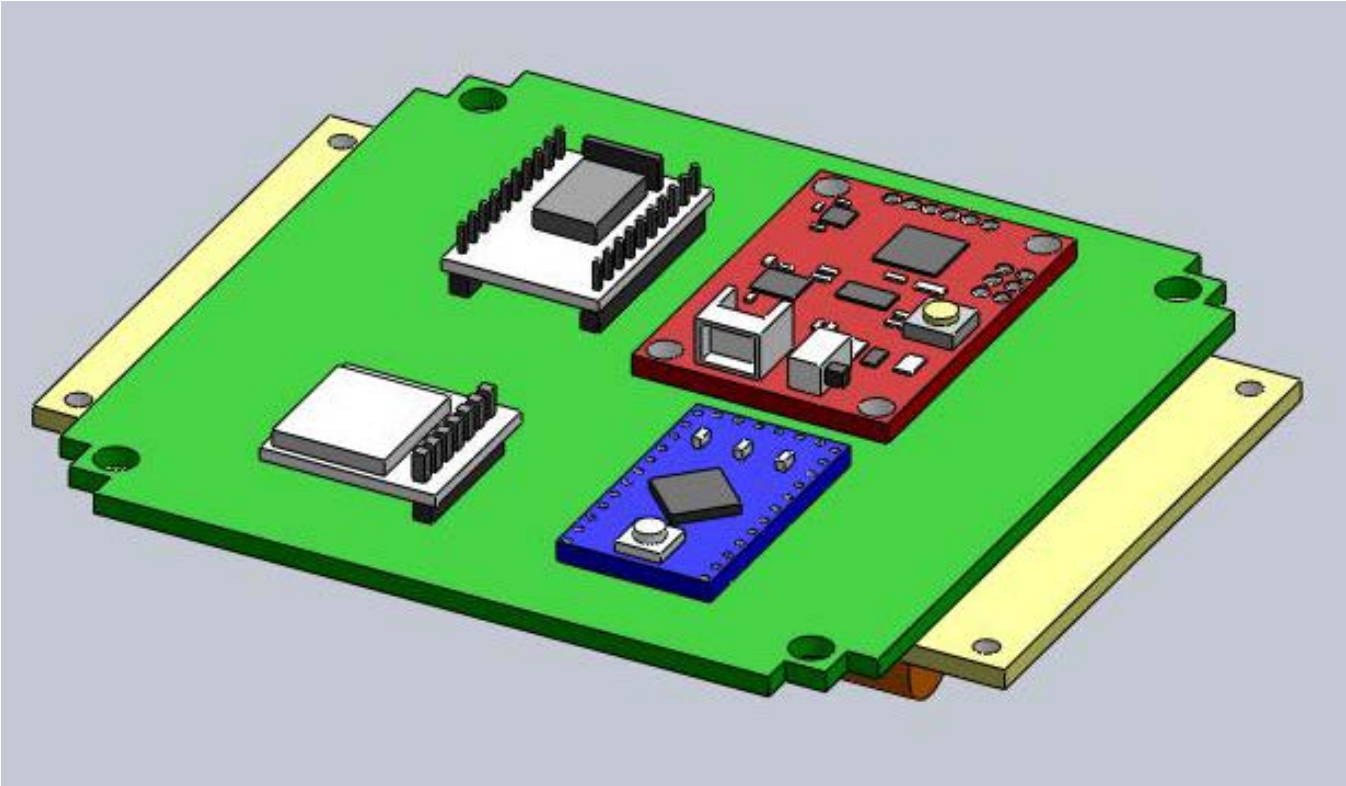

Mechanical Design: Bottom

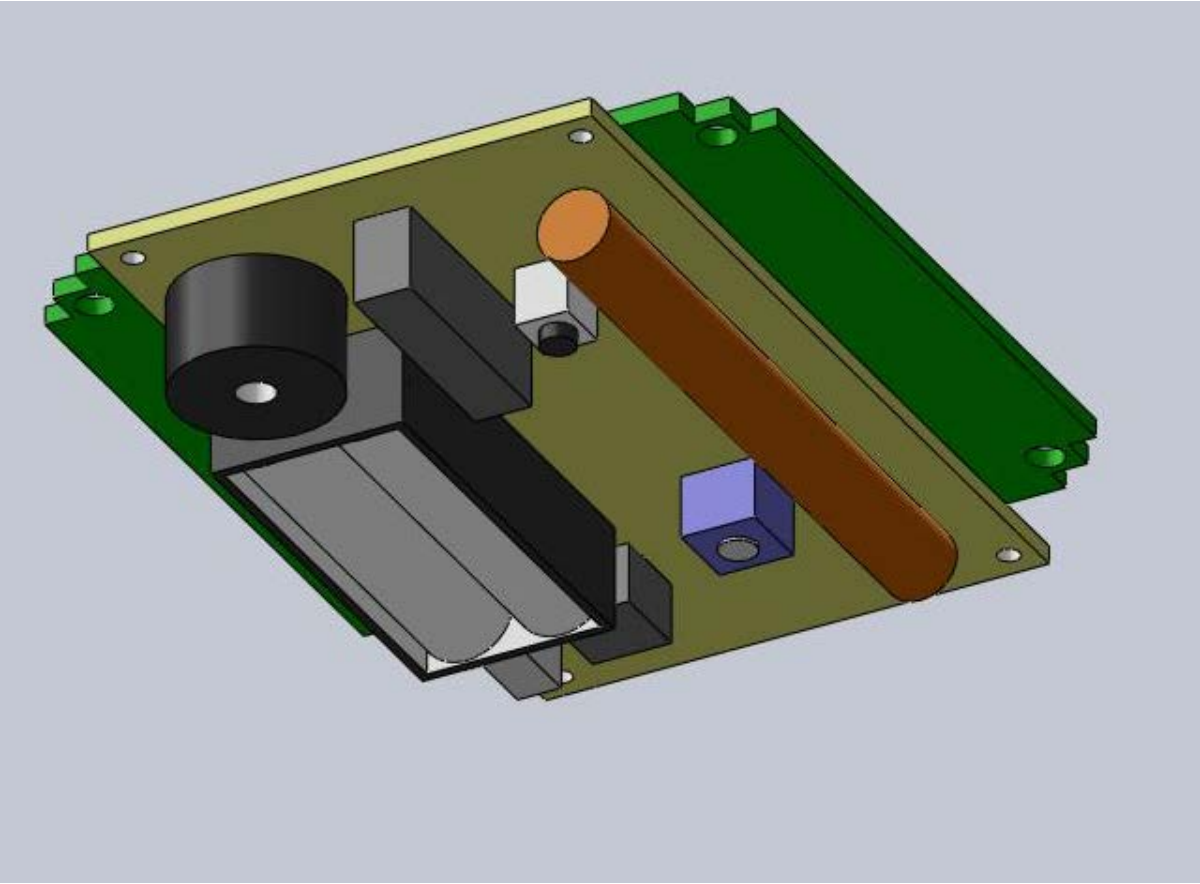

2.0d Subsystem Testing Status: WVUTech-SPACE

Zach Dixon, Alex Flores

Changes since STR

- SD card programmed
- IMU may be removed from payload as a de-scope/off-ramp.
- Magnetometer and SD card working as a payload.

Subsystem Testing Status: Magnetometer

Magnetometer Subsystem

- The magnetic magnitude, X, Y, and Z axis have been tested and proved to have very linear data.
- Test was run for 5 minutes with payload siting on a flat surface. Expect magnitude values are 0.25 - 0.65 gauss which is found to be the earth's magnetic field strength at the surface.
- Magnetic Magnitude values show a linear trend of 0.45 gauss.
- A more reliable system is being developed to test the X, Y, and Z axis more accurately.
- Pictured on the next slide is the testing setup with three separate voltages being supplied to each component.

Magnetometer Testing Setup

- 5.7 Volts supplied to SD card
- 5 Volts from laptop supplied to Netburner
- 12 Volts supplied to magnetometer, along with resistor circuit to step down 5 v logic to 3 v logic.

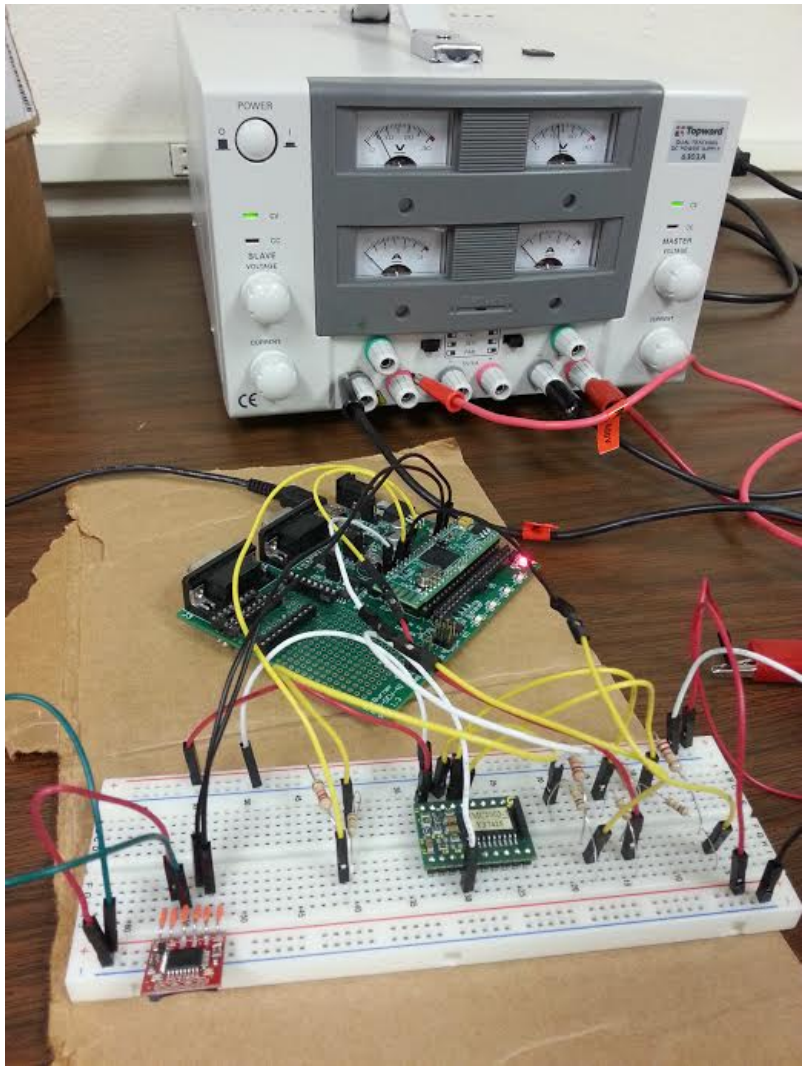

Magnetic Magnitude Plot vs Time

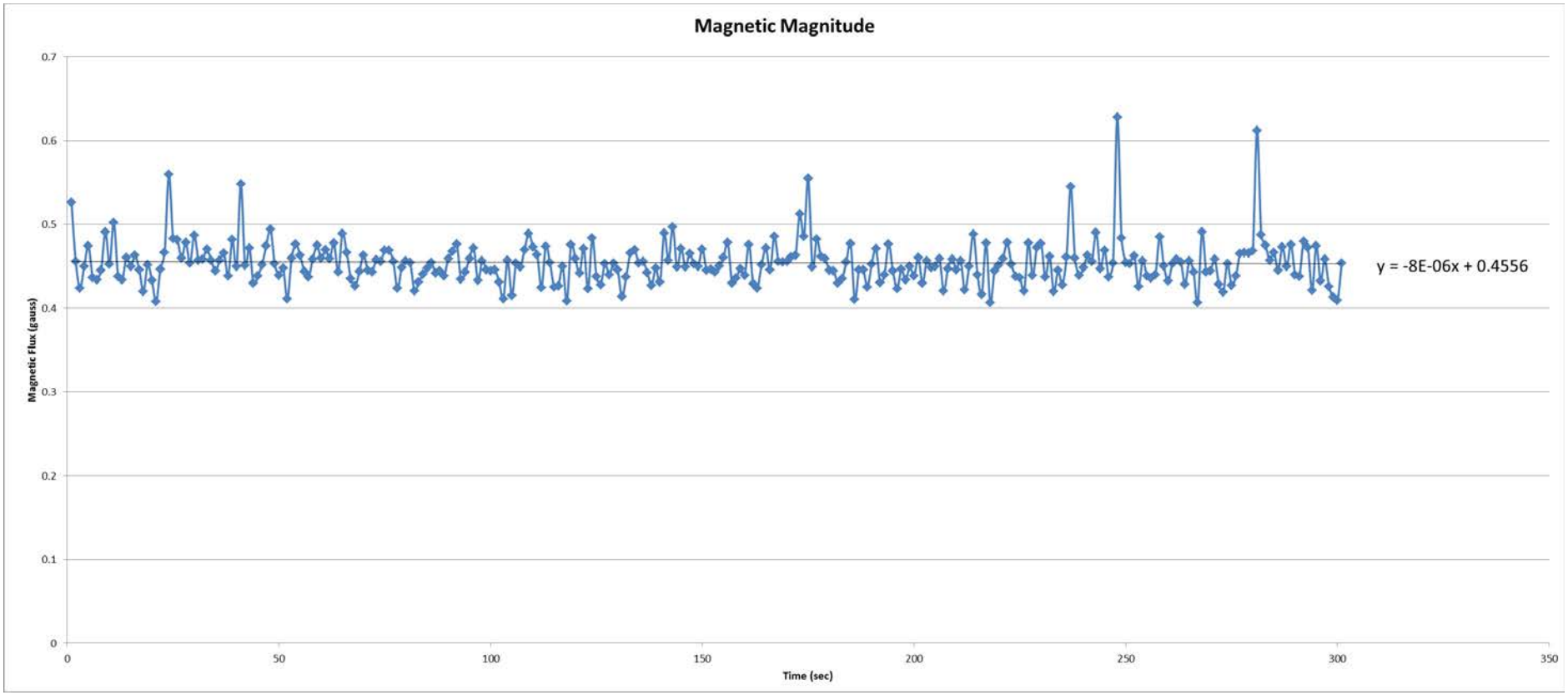

Magnetic Flux XYZ-Axes vs Time

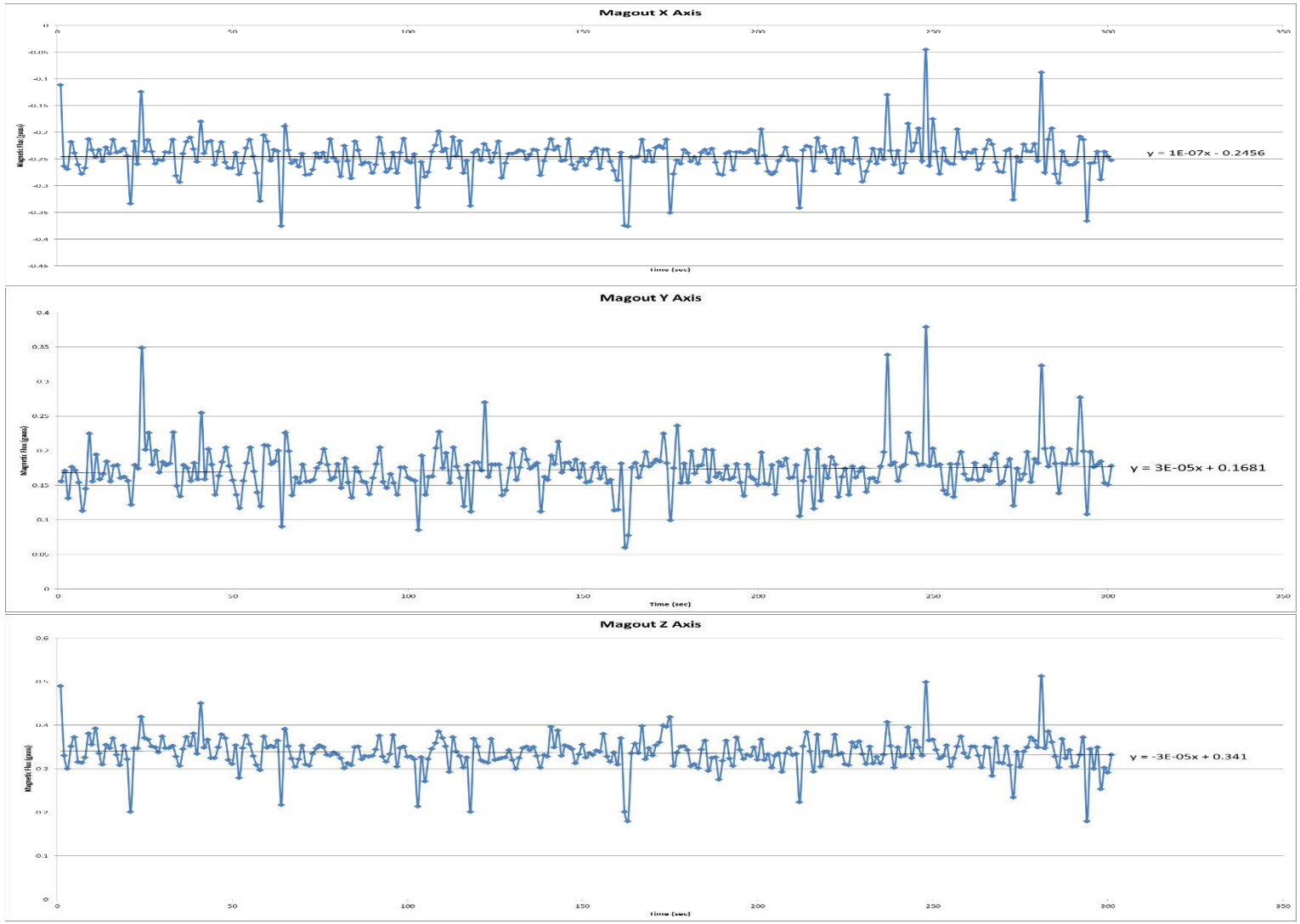

Summary of Progress

- PCB schematic and board layout are in the works. This should be done, but has caused some complications. Should be finished and ready to order by 4/17/15.
- Schematic is finished, but more reasonably sized components need to be chosen.
- Programming needs changed on Magnetometer to better organize data for excel manipulation.
- IMU coding needs to be developed, but may be dropped as a failsafe if there isn't enough time to develop the code.

Mechanical Design

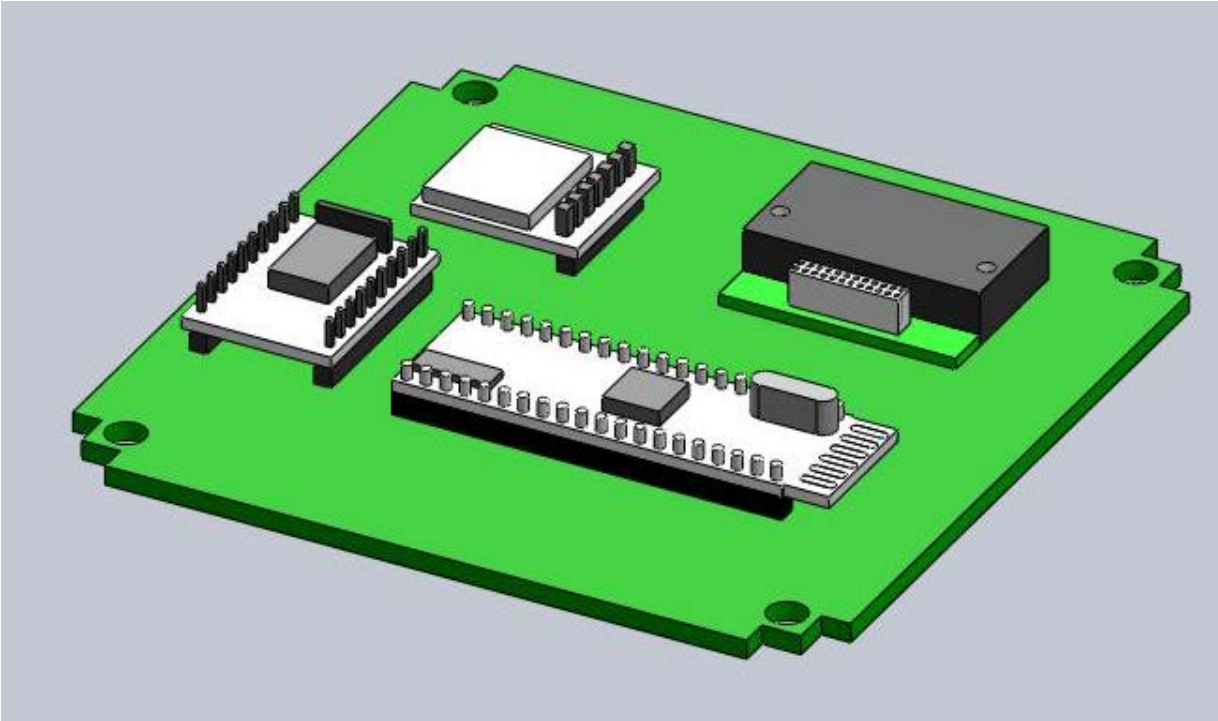

2.0e Subsystem Testing Status: Shepherd-SPACE

Rachelle Huff, Andy Shtanko, Ben Denny, Anna Brewer

PCB Design

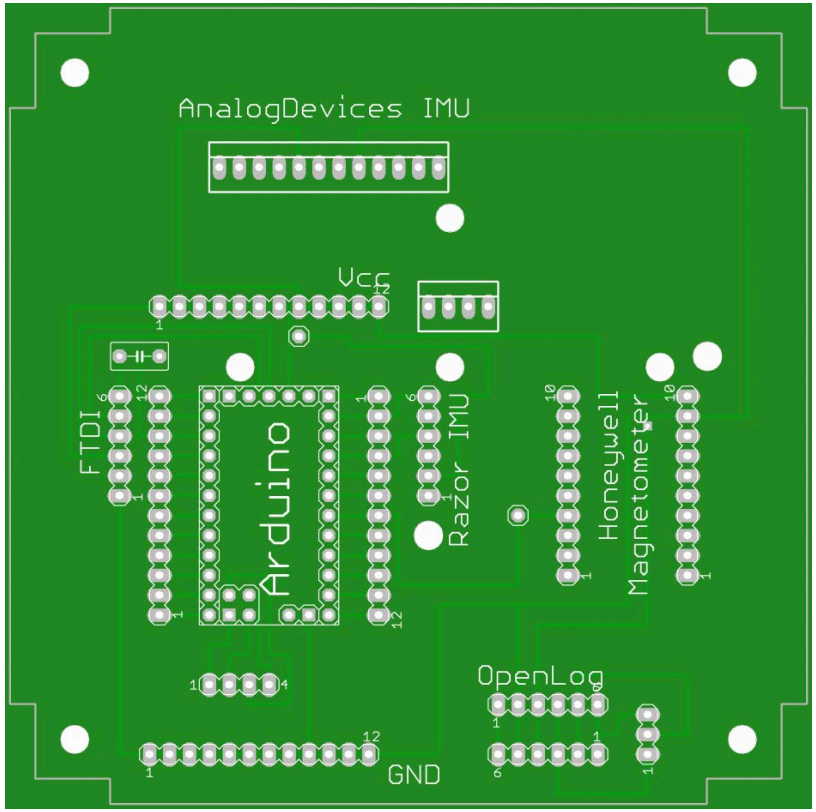

Picture 1: To left, top of Payload board

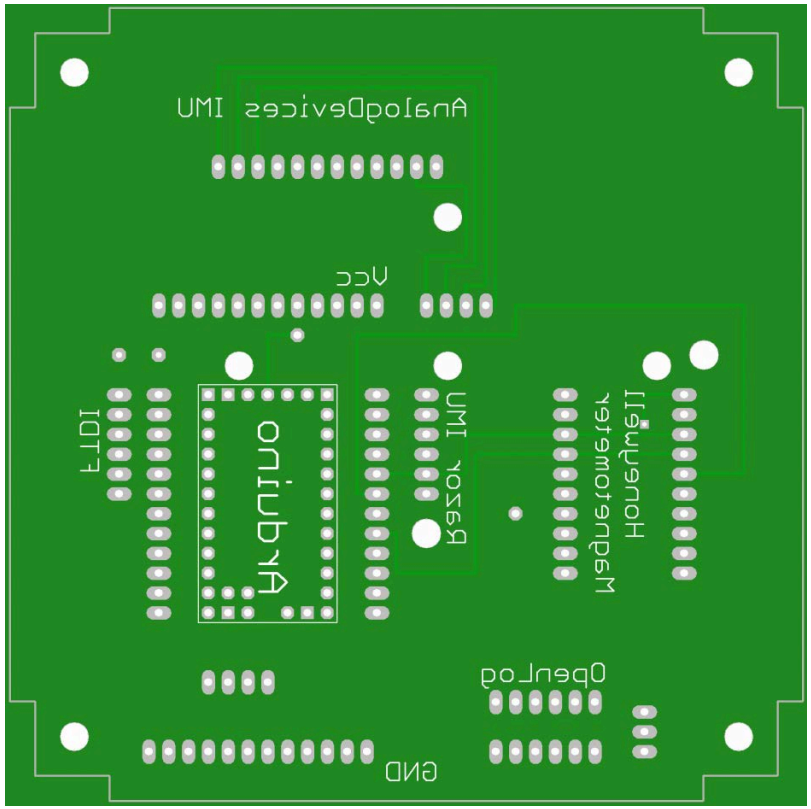

Picture 2: To right, bottom of Payload board

Changes since STR

- Some connections were changed on our PCB
- Our PCB has come in, need to solder and do testing
- Tentative (local) balloon launch for April 28th

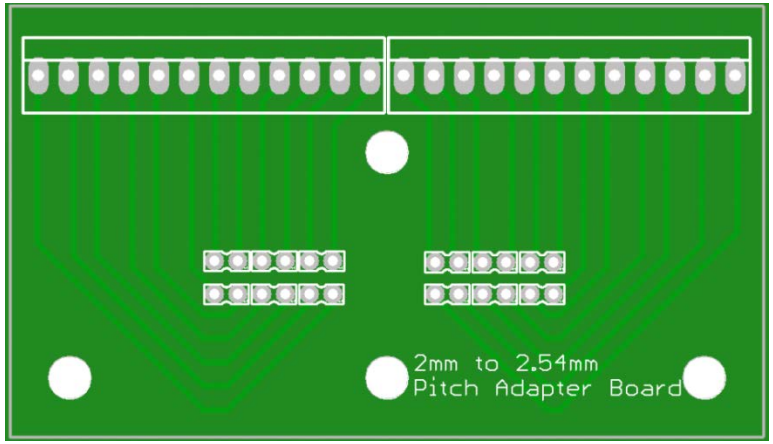

Picture 3: Adapter for ADIS IMU

Subsystem Testing Status:

Shepherd-SPACE

The Both IMU's and Magnetometer worked fine last we tested them

Have not had a chance to test since changes made to PCB

Will test this week with PCB via tether, possible launch April 28th

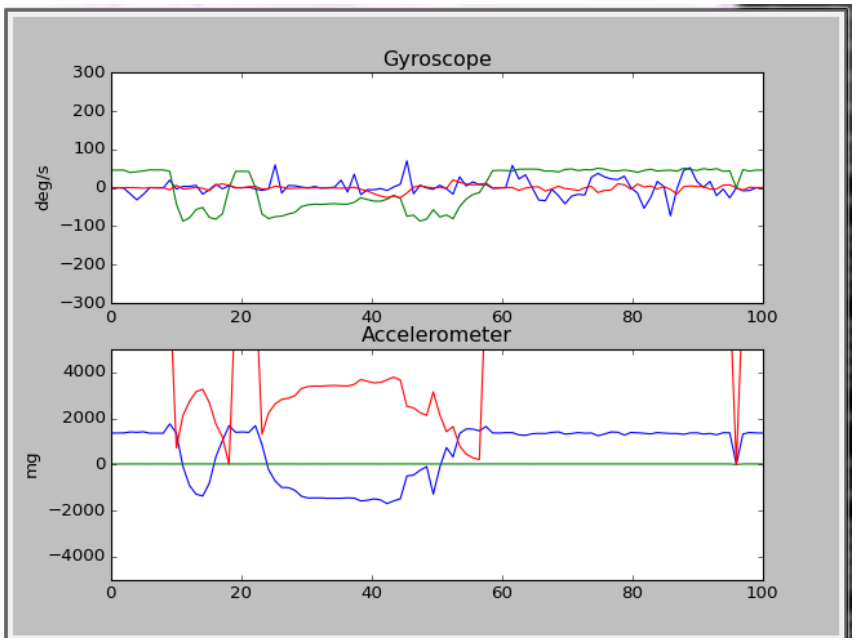


```
X = 0.00; Y = 0.07; Z = 0.09; Ref = 17.00
YPR=120.76,4.49,1.20;

X = 0.14; Y = 0.19; Z = 0.20; Ref = 42.00
YPR=120.80,4.53,
X = 0.24; Y = 0.30; Z = 0.31; Ref = 63.00
YPR=120
X = 0.34; Y = 0.38; Z = 0.41; Ref = 83.00
YPR=120.77,4.28,1.34;

X = 0.41; Y = 0.45; Z = 0.47; Ref = 96.00
YPR=120.47,4.47,1.29;

X = 0.50; Y = 0.55; Z = 0.57; Ref = 116.00
YPR=120.42,4.54,1.32;

X = 0.57; Y = 0.60; Z = 0.62; Ref = 124.00
YPR=120.60,4.53,1.28;

X = 0.57; Y = 0.59; Z = 0.61; Ref = 123.00
YPR=120.58,4.30,1.24;

X = 0.57; Y = 0.59; Z = 0.59; Ref = 118.00
YPR=120.80,4.44,1.20;

X = 0.60; Y = 0.61; Z = 0.61; Ref = 123.00
YPR=120.63,4.44,1.28;

X = 0.58; Y = 0.58; Z = 0.57; Ref = 117.00
YPR=120.72,4.42,1.19;

X = 0.56; Y = 0.55; Z = 0.54; Ref = 109.00
YPR=120.90,4.34,1.34;

X = 0.50; Y = 0.47; Z = 0.46; Ref = 95.00
YPR=120.62,4.41,1.34;
```

Summary of Progress

- Since the PCB has come in we have a couple weeks to work on testing
- This will allow us to make sure everything works and correct any problems
- Tentative (local) weather balloon launch scheduled for April 28th and a group HAB launch May 9th

Mechanical Design

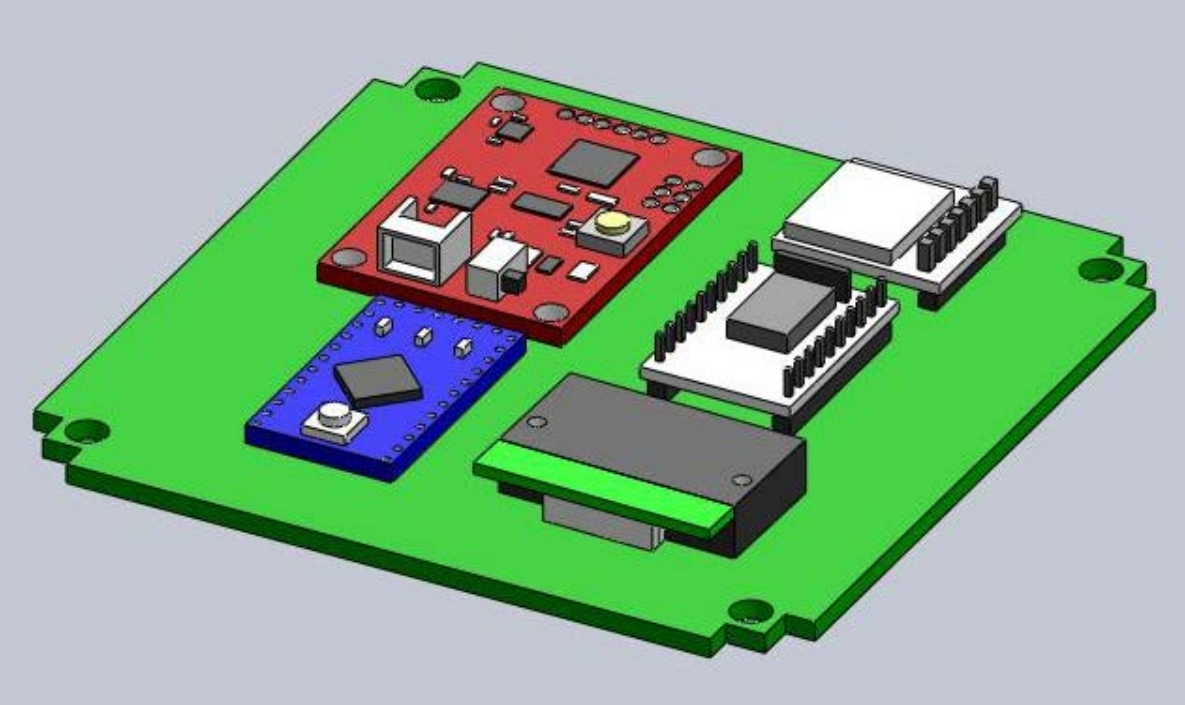

2.0f Subsystem Testing Status: PDS

Steven Hard, Greg Lusk

Integrated Subsystem Testing Status: PDS

1.0 Voltage regulators and logic level shifter

90%

This will verify that the proper voltage is supplied to each subsystem and that the linear actuator is not inadvertently extended upon startup of Raspberry Pi

Prototype verification testing of DC/DC voltage converters and logic level shifter was completed in late March with success

Additional tests of PCB output will be conducted in 2 week when delivered and populated

```
system("echo 18 > /sys/class/gpio/export");
system("echo out > /sys/class/gpio/gpio18/direction");
system("echo 1 > /sys/class/gpio/gpio18/value");
usleep(10000000);
system("echo 0 > /sys/class/gpio/gpio18/value");
usleep(10000000);
```

PDS: Electrical Schematic

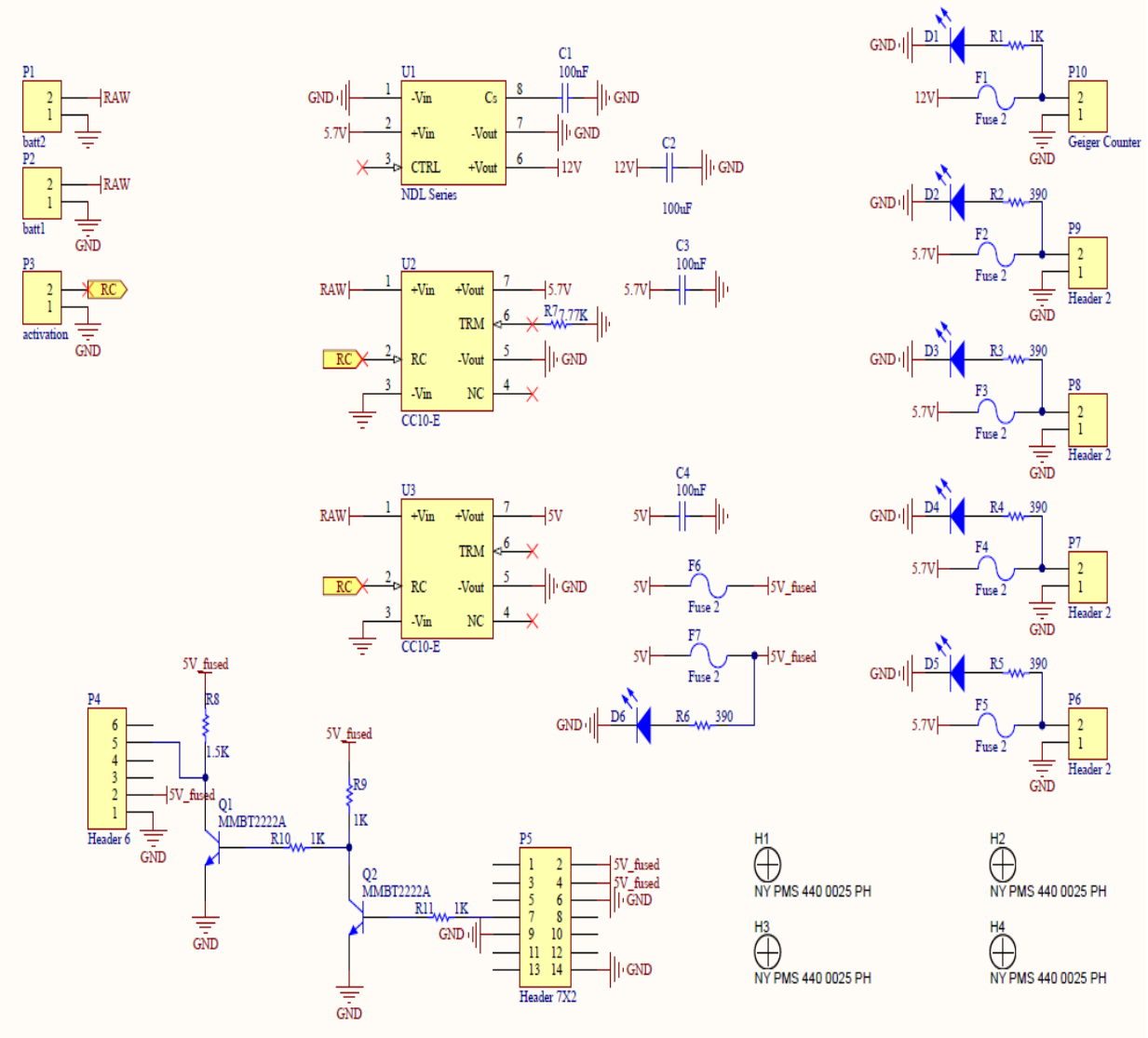

PDS: PCB Design

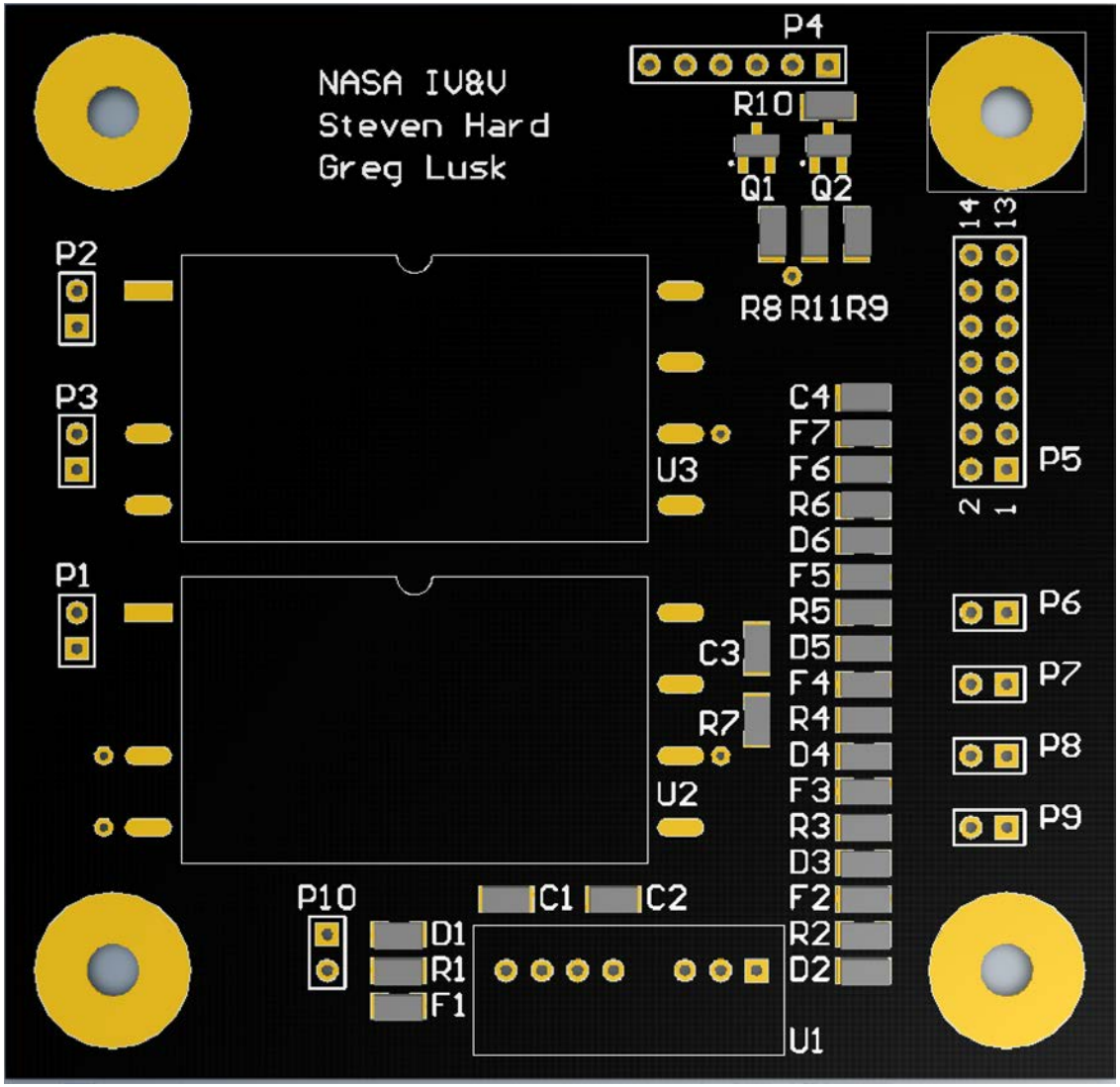

3.0 Integrated Subsystem Status

Steven Hard, Alex Flores

Integrated Subsystem Testing Status:

- No full integrated testing to date
  - Semi-integrated testing with tethered balloon launch
  - Moderate success and limited data gathered
- Subsystem verification testing list:
  - PDS electrical subsystem testing
  - SPACE (4x) electrical and functional testing
  - SSP assembly and subsystem integration
  - Canister fit test
  - Full system readiness test
  - HAB launch (full simulation test)
  - Vibe Test

Integrated Mechanical Design

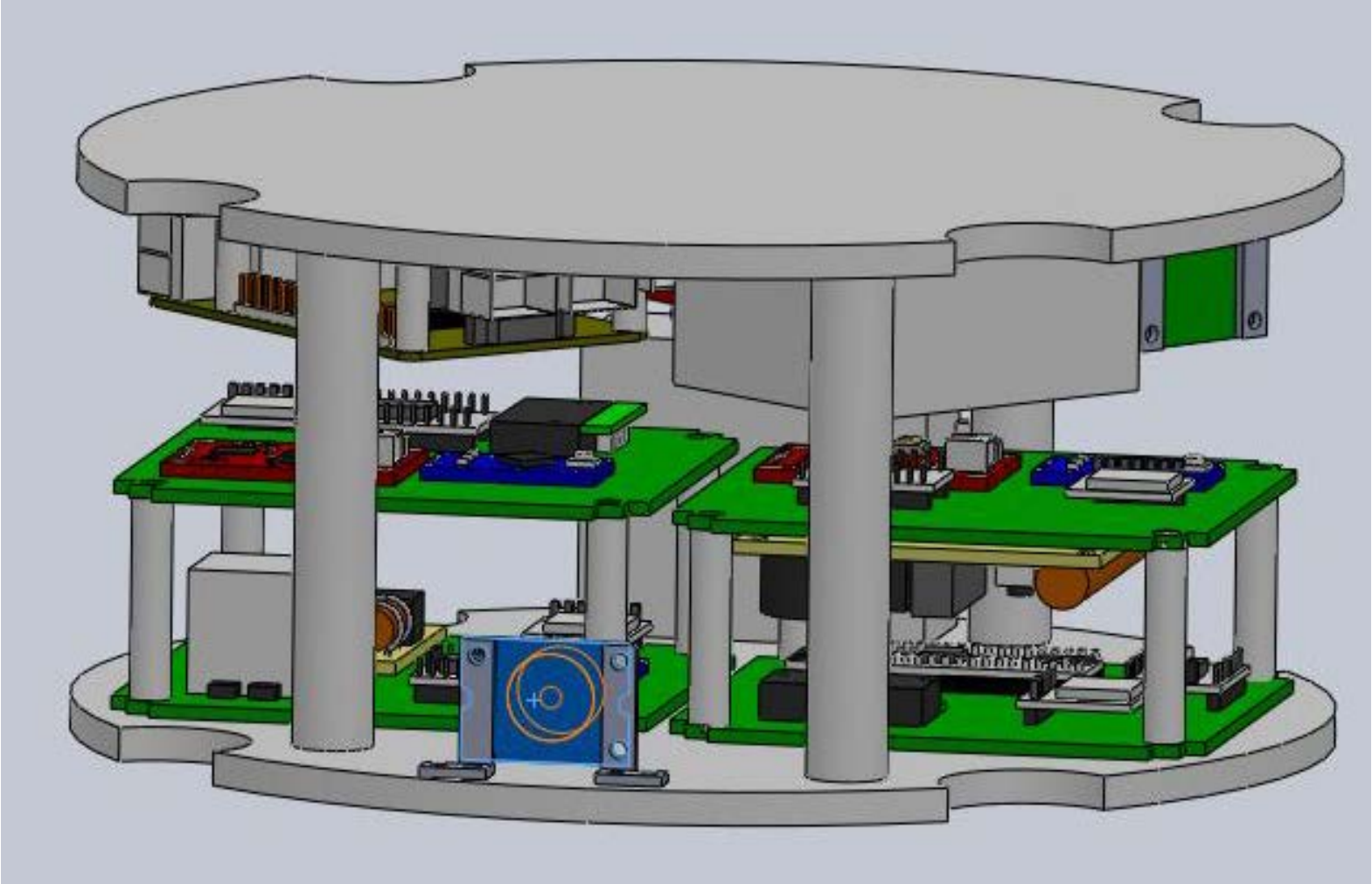

Full-Canister Mechanical Design

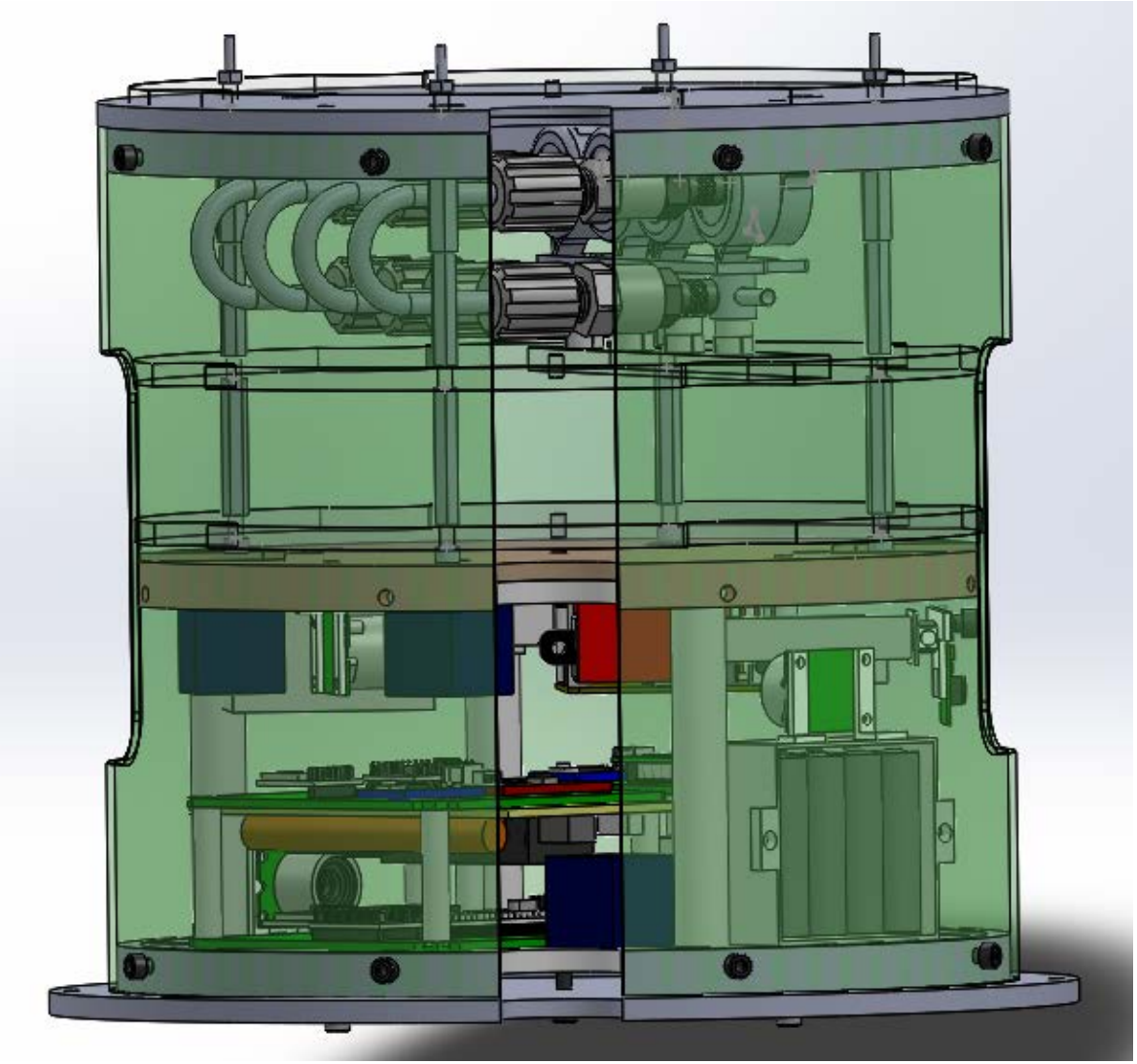

4.0 Full System Integration Plan

Steven Hard

Canister Integration

- Fit test
  - Construct Makralon plates
  - Configure/mount subsystems as designed and verify dimensional limitations are met
- Expected integration testing May 11th

Vibe Test

- Vibe test will ensure all components withstand launch conditions and are functional afterward
  - Actual vibration data will not be used
  - Will bring spare components
  - Flight hardware will not be replaced if unnecessary
- Planned as part of RSC15 activities in June
  - Possible test at ATK beforehand

Electrical Testing

- PDS PCB will be tested to verify proper voltage outputs directly after delivery and components assembled
- SPACE PCBs will be tested individually prior to integration testing
  - Supplied with 5.7 V
  - Verify all voltage regulator/converter outputs
  - Verify subsystem functionality
- All tested completed by end of April
- High voltage – Geiger counters (x2)
- Power draw tested using digital voltage supply
- Battery life will be tested in real time during integration testing

System Level Testing

- Full system readiness test
  - Power each subsystem through PDS for full mission time
  - Verify subsystems working as expected
  - Integration testing April 27th
- HAB launch
  - Mission simulation testing in High Altitude Balloon
  - Launch scheduled May 9th

5.0 Project Management Update

Steven Hard

Schedule

- Major Milestones
  - Prototype high risk items (11/28/15)
  - Flight award announcement (1/16/2015)
  - Procure remaining components (1/17/2015)
  - STR (Week of 2/23/15)
  - Design PCBs (Week of 2/16/15)
  - High Altitude Balloon Launch (5/9/15)
  - ISTR (Week of 4/13/15)
  - Receive canister (Week of 4/20/15)
  - FMSR (Week of 5/20/15)
  - Deliver preliminary check-in document (Week of 6/4/15)
  - LRR (6/17/15)
  - Travel to Wallops (6/18/15)
  - Launch (6/25/15)*

* Tentative, no guarantee – small chance launch could get cancelled due to weather or other unforeseen delays

Summary of Progress

- Overall a little behind schedule, but still on track with a risk that 2nd round of PCB orders are necessary in some cases
  - Mitigate risk with express shipping and all hands on deck support
- Possibility of off-ramping some objectives for some subsystems behind in development
- Concern of final exams impacting crucial development period
  - Mitigate risk by extending 1-2 weeks into May

User Guide Compliance

Requirement	*Status/Reason (if needed)*
Center of gravity in 1" mid-can?	With 1’
Contained in can	
Connected to can by 4/5 bulkheads on top and bottom only	
Mass at 10±0.2lbs (half can)	Currently 10 lbs with ballast for 0.2lb tolerance
Shared canister clearance	1” separation between payloads – needs verified
No voltage on the can	No opportunity to check yet
Activation wires at least 4 ft	
Activation wire at least 24 gauge	22 gauge
Early Activation: current < 1 A	No opportunity to check fully integrated current draw yet
T-0 Activation: current < .1 A	Not using
Battery Type	Ni-mh (will not charge at Wallops)

Shared Can Logistics

- Sharing with Temple University
  - Team Lead: Alex Lieu
- Plan for collaboration
  - Exchanging emails to share designs
  - No actual fit check scheduled before June
- WV experiment will be on bottom
- Mid mounting plate will be used
  - Looks like Temple's payload needs adjusted to fit within mid-mounting plate
- Total weight (½ mounting plate/canister weight included)
  - 10 lb
- WVU-Cam experiment will access to the following port
  - Optics port

grandpmr.com

Budget

- All experimental components have been procured/delivered
- PCBs and components are only purchases yet to be made

Margin:	0.3	Budget:	$1,300.00	Last Update:	9/30/2010 11:50
WV RSC'15 Payload					
Item	**Supplier**	**Estimated, Specific Cost**	**Number Required**	**Toal Cost**	**Notes**
Linear Actuator	Firgelli	$120.00	1	$120.00	1 mini tracked linear actuator
Raspberry Pi	DigiKey	$35.00	2	$70.00	1 for testing
Pi NoIR Cam	Adafruit	$25.00	2	$50.00	1 for testing
Mini WebCam	Amazon	$90.00	2	$180.00	1 for testing
Magnetometer	Honeywell	$220.00	1	$220.00	Marshall Payload
Inertial Measurement Unit (s)	Analog Devices Sparkfun	$150.00	2	$300.00	Marshall Payload
Microcontroller	DigiKey	$25.00	1	$25.00	Marshall Payload
Printed Circuit Boards	Advanced Circuits	$33.00	4	$132.00	1 board/SPACE
Misc. Electronics (R,L,C)	DigiKey	$50.00	4	$200.00	4 misc/SPACE
Testing Materials	Various	$75.00	4	$300.00	Testing equipment for each team
Total (no margin):					$1,597.00
Total (w/ margin):					$2,076.10
Total Spent:					$1,265.00
Total Balance:					$811.10

Conclusions

- Continued electrical testing with PCB designs
  - Integrated payload configurations causing some software debugging issues
- Finalize software for integration testing and fit check
- Get ready for HAB launch!