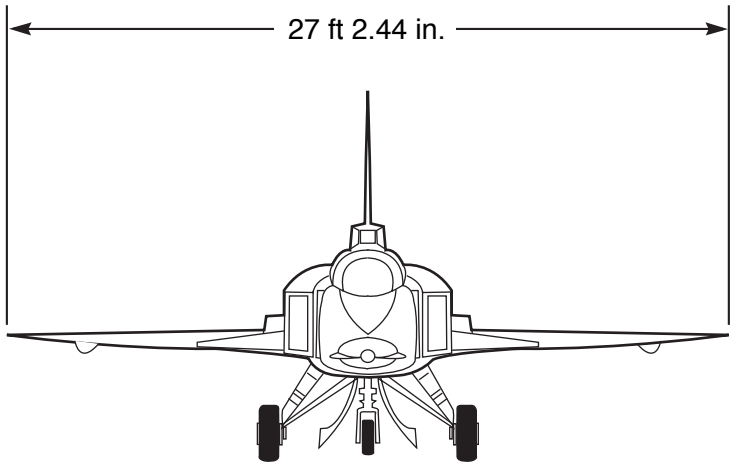
27 ft 2.44 in.

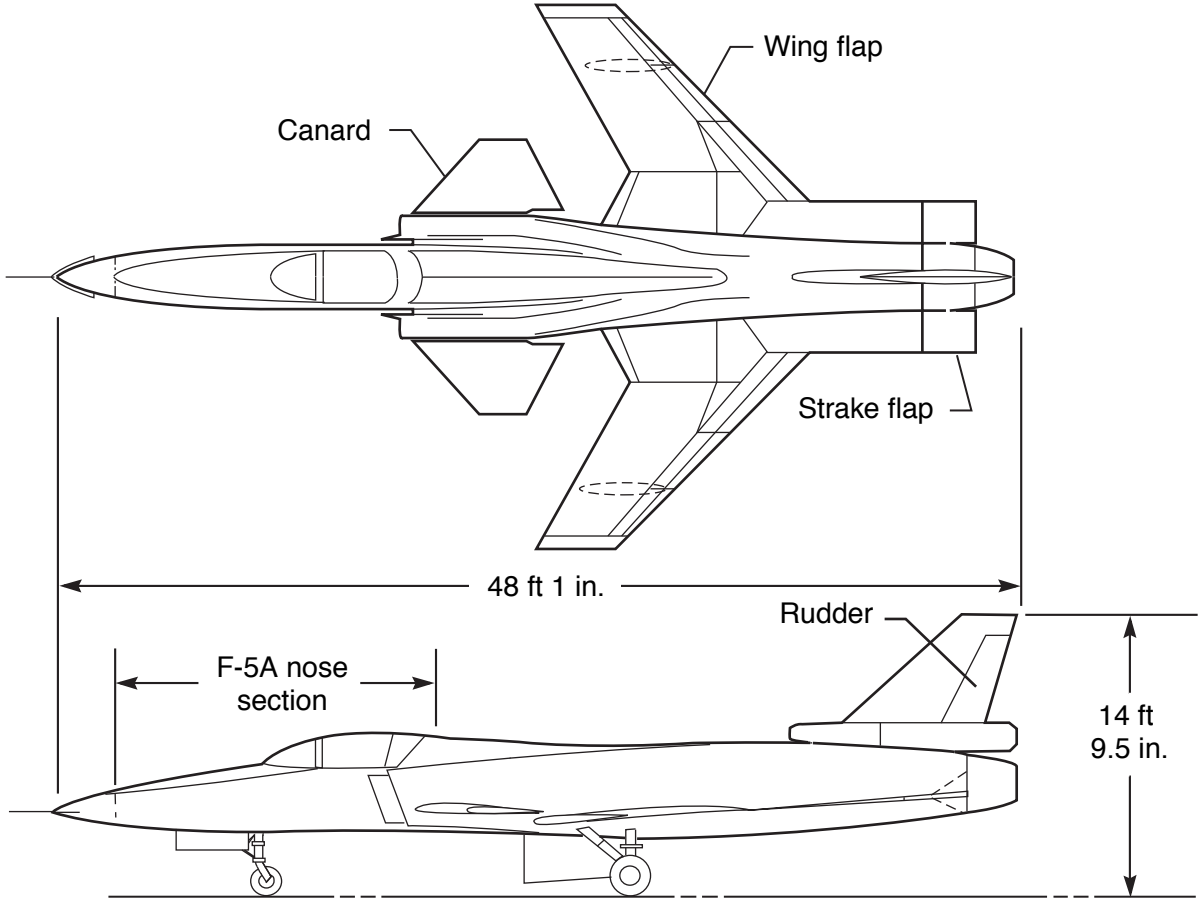
Wing flap
Canard
Strake flap
48 ft 1 in.
Rudder
F-5A nose
section
14 ft
9.5 in.