WV SPACE

Conceptual Design Review

WVU WVU-TECH FSU WVSU BRCTC BVCTC SU MU WVWC JFFL NASA IV&V

Steven Hard, Abigail Ida, Scott Browning, Nicole George, Andrew Tiffin, Rachelle Huff, Brandi Bricker, David Vasquez, Ronald Willis, Jonathan Stolling

10/13/2015

CoDR Presentation Contents

- Section 1: Mission Overview
  - Mission Overview
  - Theory and Concepts
  - Mission Requirements (top level)
  - Expected Results
  - Concept of Operations
- Section 2: Conceptual Design Overview
  - Design Overview
  - Functional Block Diagrams
  - Payload Layout
  - RockSat-C 2016 User's Guide Compliance
  - Shared Can Logistics (if applicable)

CoDR Presentation Contents

- Section 3: Management
  - **Team Organization**
  - Schedule
  - Budget
  - Mentors (Faculty, industry)
  - Team Contact Matrix
  - Team Availability Matrix
- Section 4: Conclusions

jessicaswanson.com

1.0 Mission Overview

Team Leads

Mission Overview

- Mission: Design and test science payloads in space environment
- System shall provide knowledge and hands-on experience to students
- System shall be able to save data during flight for post analysis
- B-field/IMU correlation and space images
- Benefits SmallSat community – COTS orientation estimation
- Coastal vegetation health analysis
- Stress testing of ABS plastics in space

WVU-CAMs Experiment

"The goal of the WVU-CAMs experiment is to capture video footage of earth and outer space as well as to provide video telemetry of the payload canister (actuators/LEDs/etc) throughout entire flight"

- Mission requirements from this statement:
  - Capture IR video of earth and space during flight
  - Capture video telemetry of payload experiments
- Expect to extract vegetation health on land masses from earth images
- Expect to study near-infrared light sources from space
- The sensor developed will reduce future payload weight and footprint size

WVU-CAMs Overview: Theory and Concepts

- Study how earth's surface reflects/absorbs Sun's near-infrared (NIR) radiation
  - Observe health of vegetation and soil composition
- Collect images of cooler red stars and red giants for spatial analysis
  - Try to identify certain stars based on orientation
- NIR wavelength: 800 – 2500 nm
- Camera hardware/software flown on RSC'15
  - Results prove imaging apparatus feasible
  - Replacing standard cam lens w/ NIR cam lens

WVU–CAMs Overview: Mission Requirements

- Objectives: Capture images of earth at 60 fps in-flight, capture images of payload operations at 60 fps in-flight, store data for post-processing and analysis
- System Requirements:
  - Camera must be able to view earth's surface and configurable to take video at 60 fps
  - Additional camera must be positioned to view necessary telemetry information and provided adequate lighting
  - Need structure to support the instrument(s) in-flight
  - Need a data collection system to store the measurements (in-flight)
- Minimum Success
  - One image of earth's surface to distinguish landmass and potential vegetation health assessment
  - Visual telemetry collected after launch and at apogee

WVU-CAM Layout

Imaging CPU

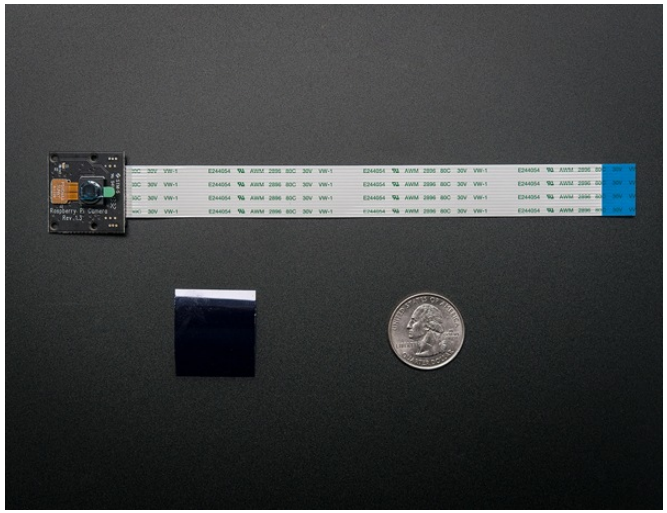

NIR Camera

Payload Camera

Linear Actuator (Boom)

WVWC-SPACE Experiment

- Objective: Use an IMU unit to measure and react to the attitude, and change in attitude, of a space payload
- IMU specifications:
  - 3-axis gyroscope, +/- 5.6 Hz range, 16-bit resolution (0.00017 Hz)
  - 3-axis accelerometer, +/- 16 g, 13-bit resolution (0.004 g)
  - 3-axis magnetometer, +/- 8 Gauss, resolution dependent on gain setting (about 1 mGauss)
- Sensitivity of IMU sensors well-matched to RockSat-C specifications

WVWC-SPACE Overview: Expected Results

- On a spacecraft, servo motors would be powered based on the readings from the IMU sensors
- For the RockSat-C flight, the voltage output to the servo motors will be simulated – i.e. written to an output file.
- The output voltages will be time-synced and plotted to show, for example, how long it would have taken for a complete servo system to respond to sensor input
- One thing we will not be able to measure on a rocket flight is "overshoot", which happens when a servo corrects too far and then has to adjust back and forth a bit

WVWC-SPACE Layout

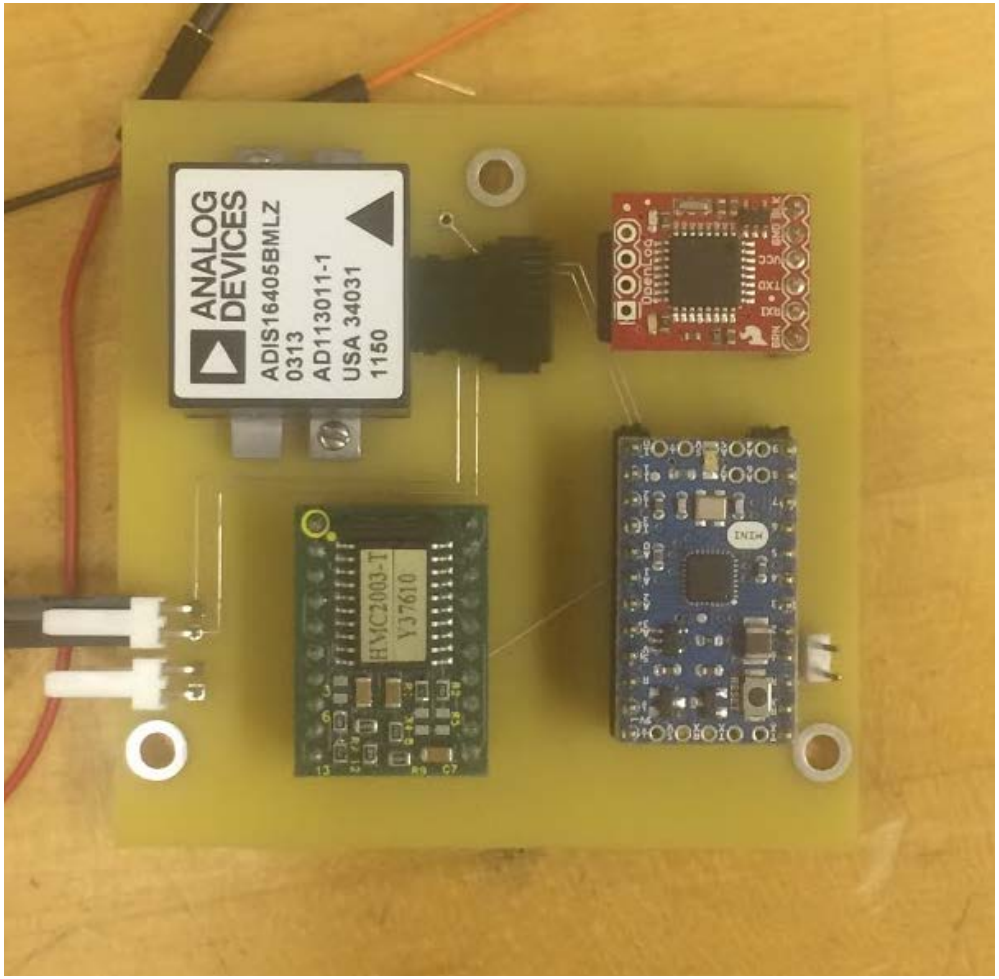

Flight Dynamics Board

Shepherd-SPACE Experiment

"The goal of the Shepherd-SPACE experiment is to collect FD data and B-field data in-flight using multiple inertial measurement units (IMUs) for redundancy"

- Mission requirements from this statement:
  - Collect FD data in-flight
  - Collect B-field data in-flight
  - Provide redundancy in FD data measurements
- Expect to observe a spin-rate of ~5Hz
- Expect to saturate vertical accelerometers at launch
- COTS IMU will be compared to high-end IMU for flightworthiness assessment

Shepherd-SPACE Overview: Theory and Concepts

- Compare B-field with WMM
- Study how Earth's magnetic field can be used as a mechanism for attitude determination
- Study differences in data resolution with high g force application
  - Determine if low-cost IMU is feasible for space applications
- Microcontroller, magnetometer, microSD data logger, and high-end COTS IMU flown by WVU team on RSC'14
  - Results prove devices operate successfully in space

Shepherd-SPACE Overview: Mission Requirements

- Objectives: Collect FD and B-field in-flight, store data for post-processing and analysis, prove COTS IMU device
- System Requirements (from the objectives):
  - Collect FD data and B-field data
  - Store measurements (in-flight) for post-processing and data correlation with WMM
  - Determine reliability of COTS IMU
- Minimum Success
  - Redundant FD and B-field data collected

Shepherd-SPACE Layout

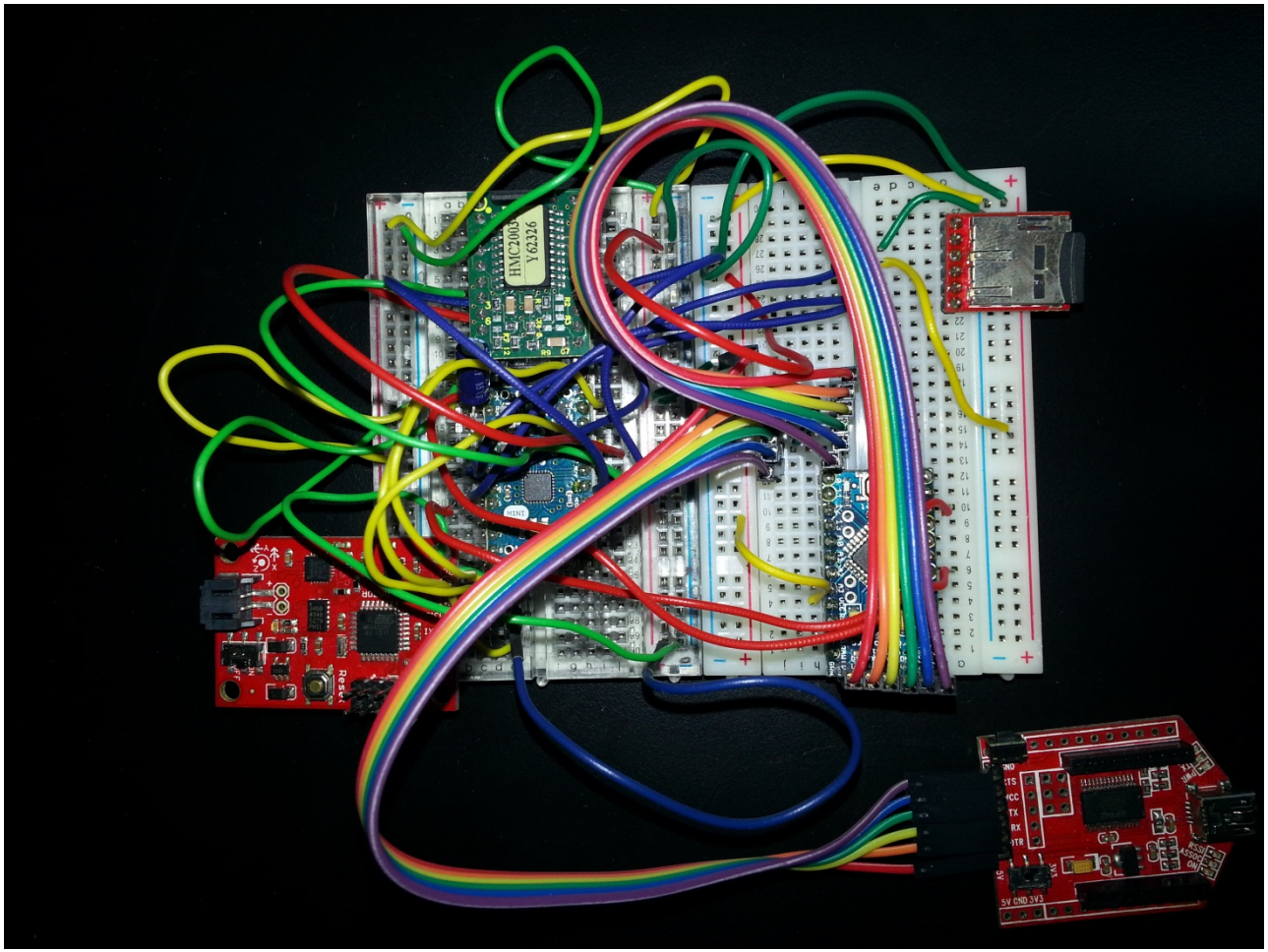

Flight Dynamics Prototype

Marshall-SPACE Experiment

- "The goal of Marshall-SPACE's experiment is to design an important component of an affordable attitude determination and control system for Cubesats, to use the currents in the solar panels to determine sun angle, which would eliminate the need for sun sensors, but the angular discrimination of these technique is rather poor."
- Mission Requirements:
  - Collect data prior to launch
  - Sensor/instrument must be able to gather the current across the solar panels at a very high rate
  - Data will need to be logged and stored to an SD card
- Timers in the system will begin data collection when the optics port is available
- Data collection will cease when the optics port closes

Marshall-SPACE Overview: Theory and Concepts

- Determine optimum angle for the solar panels to be set at to achieve the most angular discrimination of the Sun's rays to best plot its location in space relative to the rocket
  - Initial testing will be done on the ground prior to launch
- Develop a function for current across the panels and combine information with data from the IMU to determine the location of the sun
- Test in space
  - Relatively untested to this date since cubesats use much more Sunsensors

Marshall-SPACE Overview: Mission Requirements

- Objectives: Design a component for the Cubesats to determine if this method of attitude determination and control systems is feasible, the relative angle between the sun and rocket by using function of the current off of the solar panels and the IMU data, and discover if tilted solar panels will increase angular discrimination.
- System Requirements:
  - Sensor/instrument must be able to gather the current across the solar panels at a very high rate
  - Data will need to be logged and stored to an SD card.
- Minimum Success:
  - Measuring current differences across solar cells that correlate with the IMU data

WVUTECH-SPACE Experiment

- "The goal of the WVUTECH-SPACE Experiment is to assemble a circuit board and program a microcontroller to collect flight dynamics and magnetic field data in addition to determining the yield stress on ABS plastic specimens in space which will eventually be integrated into a CubeSat bus."
- Mission Requirements:
  - Measure strain exerted on ABS in tension
  - Measure accelerations, spin rates, and magnetic field
  - Store data collected throughout entire flight

WVUTECH-SPACE Overview: Theory and Concepts

- Accelerometer: 3-axis accelerometer
  - Measures proper acceleration (g-force) in different directions
  - Measures difference in capacitance
  - This is sent and interpreted by the accelerometer and then sent as a voltage.
- Magnetometer: 3-axis compass
  - Measures the strength and direction of a magnetic field.
  - Measures in the x, y, and z direction to give an orientation of the satellite with respect to the earth.
- Gyroscope: 3-axis gyroscope
  - Measures the pitch, yaw, and roll of an object using angular momentum principles.
  - Only measures movement.
- Strain Gauge
  - Measures the forces on a tensile specimen while in flight and converts them into a measureable electrical resistance.
  - Made out of ABS plastic to reduce weight.

WVUTECH-SPACE Overview: Mission Requirements

- Objective: To assemble a circuit board and program a microcontroller into a CubeSat bus. An ABS plastic test sample with strain gauge will also be integrated into the experiment.
- System Requirements:
  - Strain Gauge and tension apparatus
  - IMU containing three sensors
    - Accelerometer
    - Gyroscope
    - Magnetometer
  - Fit in a 4”x4” design envelope
  - Input voltage of 3.7 V @ 700 mA max current draw
- Minimum Success:
  - Gather flight dynamics data successfully

WVUTECH-SPACE Layout

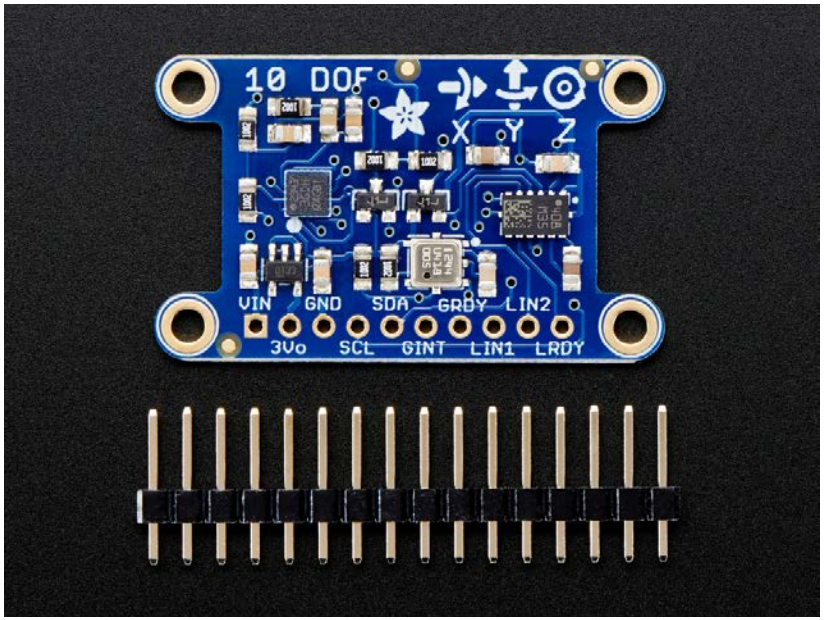

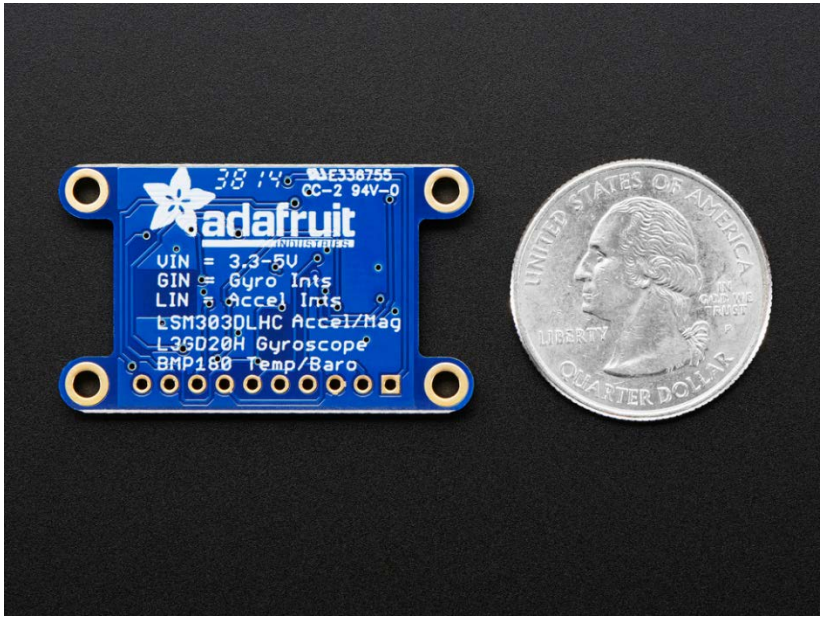

FSU-SPACE Experiment

- "The goal of the FSU-SPACE experiment is to test the accuracy of the sensors by designing a circuit that can estimate its position in space at any time to a high degree of accuracy."
- Mission Requirements:
  - Circuit containing sensors that measure flight dynamics and position of payload
  - Fit within design constraints of standard CubeSat payload

FSU-SPACE Overview: Theory and Concepts

- Data from all available sensors will be recorded to memory periodically.
- Circuit will then input the readings into algorithms to calculate an estimate of its location in space at that time. This estimate will also be recorded next to a time stamp.
- Sensors primarily used will be the accelerometers, the altimeter, and the magnetic sensor. The barometric pressure, gyros, (and to a lesser extent, the temperature gauge) will serve as "check readings" the circuit can compare its estimates to for either confirmation or "re-evaluation"

FSU-SPACE Overview: Mission Requirements

- Objective: To design a circuit that determines its position at any point in time and determine the accuracy of the sensors.
- System Requirements:
  - Microcontroller
  - 3-axis accelerometer and gyro/Attitude indicators
  - Altimeter
  - Magnetic compass
  - Gyros/Attitude indicators
  - Barometric and temperature gauges
  - Physical design constraints of standard CubeSat payload
- Minimum Success:
  - A plot of the rocket's travel will be compared to the plot of the circuit's calculated path

BRCTC-SPACE Experiment

- "The goal of the BRCTC-SPACE experiment is to monitor a variety of data to calculate approximate distance traveled, terminal skyward velocity apogee, and rate of return."
- Mission Requirements:
  - Circuit containing sensors that measure flight dynamics and position of payload
  - Fit within design constraints of standard CubeSat payload

BRCTC-SPACE Overview: Theory and Concepts

- Expected Results:
  - Capture images of visible light (400-800nm respectively) through the use of a small digital camera
  - Electromagnetic field fluctuations
  - Possible corruption of data from electromagnetic field fluctuations
  - G-forces being applied to the payload
  - Acceleration and orientation
  - Barometric pressure and temperature
- Approximate distance traveled, terminal skyward velocity, apogee, and rate of return can be calculated with these readings
- Expect to learn how these variables interact and coexist separately during the launch

BRCTC-SPACE Overview: Mission Requirements

- Objective: To use the Arduino microcontroller, a small camera, and sensors to monitor multiple variables during the flight to calculate approximate distance traveled, terminal skyward velocity, apogee, and rate of return.
- System Requirements:
  - Microcontroller required to collect data from sensors
  - Camera required to collect images of visible light
  - Sensors required to collect flight variables
- Minimum Success:
  - Measure flight variables throughout entire flight

BVCTC-SPACE Experiment

- Objective: Collect FD and B-field in-flight, store data for post-processing and analysis, prove COTS IMU device
- System Requirements:
  - Microcontroller
  - Accelerometer
  - Magnetometer
  - Data logger

BVCTC-SPACE Overview: Theory and Concepts

- Expected Results:
  - Accelerometer:
    - Tilt/acceleration during flight
  - Magnetic Sensing:
    - Track compass heading during flight
    - Magnetic field encountered
      - At surface ≈ 0.25-0.65 Gauss

BVCTC-SPACE Layout

- Major Components:
  - Structure
    - 3-d print housing to support components
  - 9DOF Razor IMU
    - ADXL345 Accelerometer
      - Stated spec: ±16G
    - HMC5883L Magnetometer
      - Stated spec: ±8 Gauss range, 5 milliGauss resolution
    - FTDI Breakout included
    - Gyro unused

WVSU-SPACE Experiment

- "The goal of WVSU-SPACE is to develop a payload that will retrieve pertinent data during successful launch missions using off-the-shelf electronics, and custom fabrication pieces while building practical application techniques and enhancing our team and individual skills"
- Mission Requirements from this statement:
  - Microcontroller
  - Sensors
  - Data logger

WVSU-SPACE Overview: Theory and Concepts

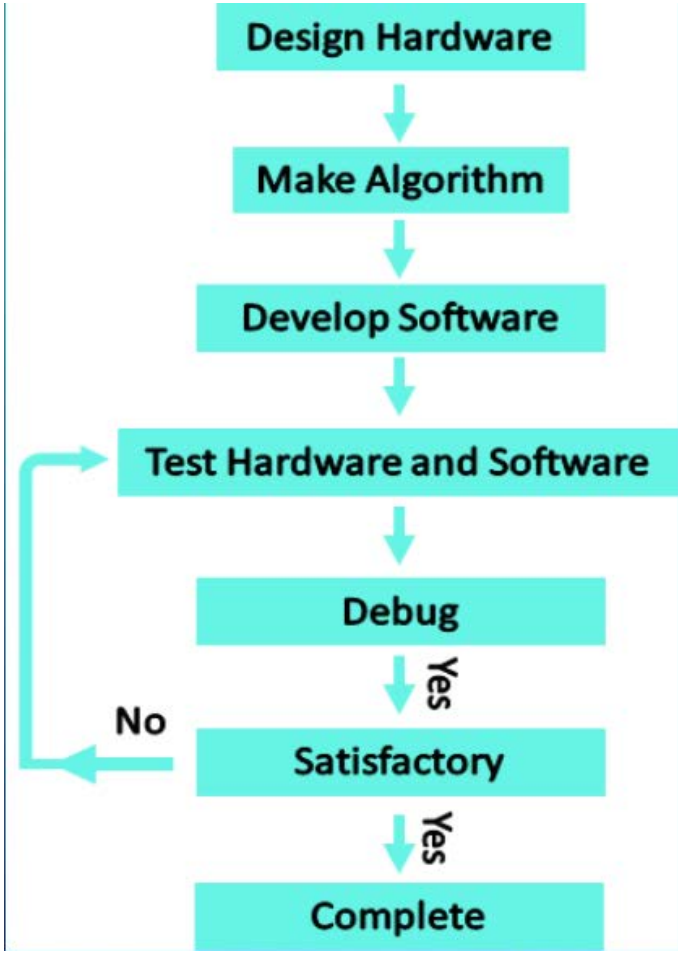

Design Approach

WVSU-SPACE Overview: Mission Requirements

- Objective: To develop a highly functioning payload that will allow retrieval of pertinent data during successful launch missions.
- Proposed sensor components:

SN	Component	Dimensions (mm)	Weight (g)	Power (W)	Price ($)	Specifications
1.	Arduino Uno R3[1]	(70X55X20)	28	2.50E-01	17	ATMEGA328 Based Microcontroller Board
2.	LSM303 Multi-Sensor [2]	(50X20X3)	3	2.80E-03	15	1.3-8.1 Gauss Magnetometer, 2g-16g Accelerometer
3.	MQ131 Ozone Sensor[3]	(32X22X30)	9	1.00E-01	32	10PPB-2PPM Ozone Meter
4.	TSL2561 Light Sensor[4]	(16X16X3)	6	1.50E-03	13	0.1-40,000 Lux
5.	FSG-001 Geiger Counter	(15X75X15)	6	2.50E-02	35	0.1-200 µSb/H

WVSU-SPACE Layout

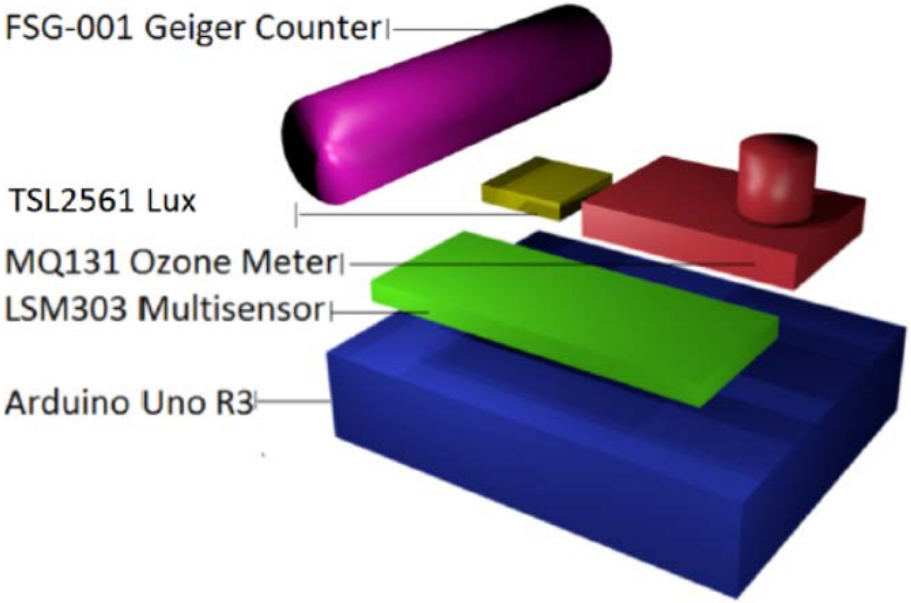

Mission ConOps

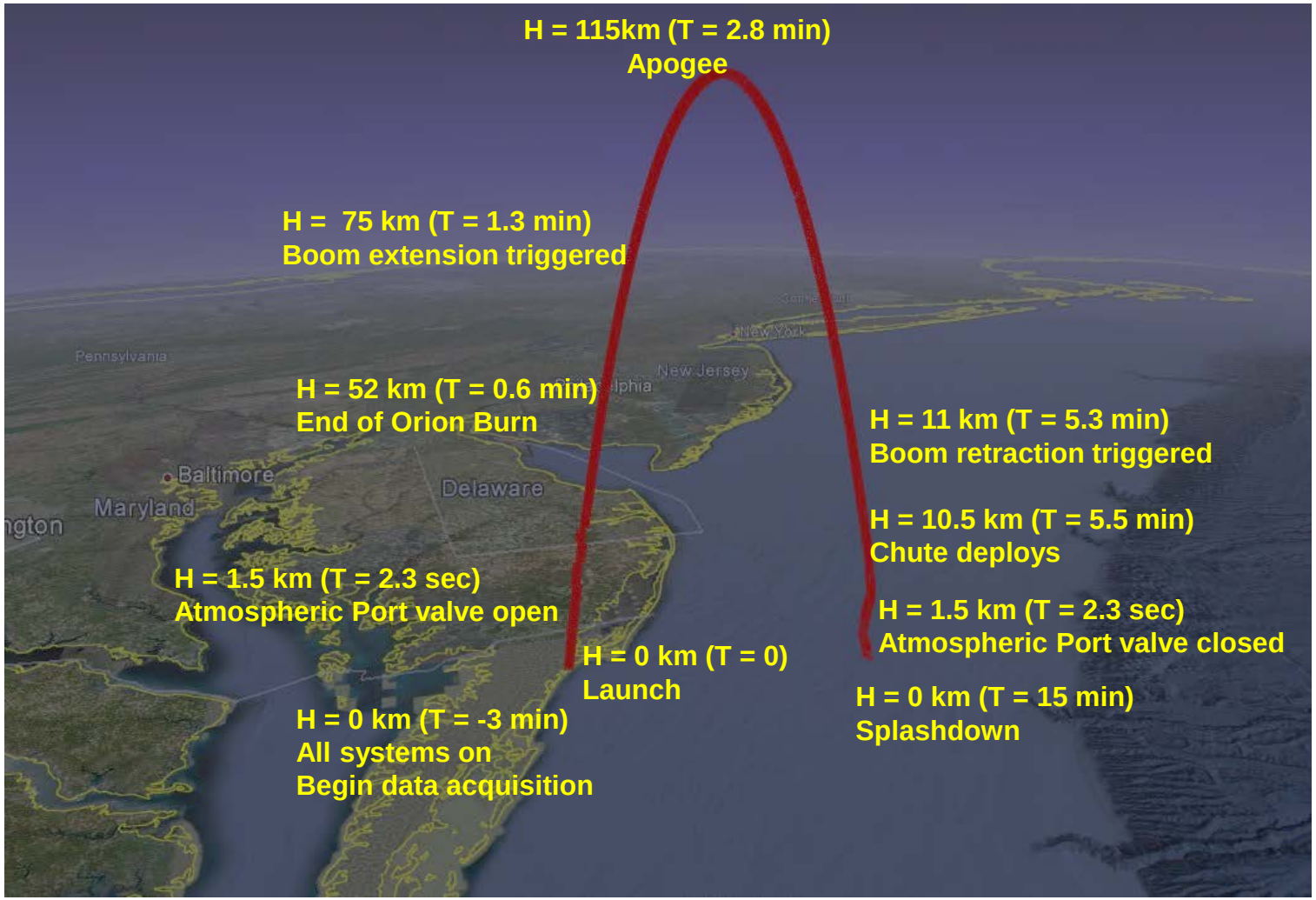

Mission Overview: Expected Results

- Correlate FD data with B-field using WMM
- Reference frame correlation of redundant FD and B-field data
- COTS IMU usability assessment
- Decreased radiation levels with increased altitude
- Ionized particle (cosmic ray) count
- Atmospheric gas concentration
- Vegetation health along eastern coast
- Visual telemetry to provide fault detection
- Strength degradation of ABS plastics in space

2.0 Design Overview

Steven Hard

Design Overview

- Major Components
  - Structure:
    - Square stack
    - NIR camera boom
    - Payload camera mount
  - Major technology dependencies:
    - Sensors:
      - IMU
      - Magnetometer
      - Geiger counter
      - Gas sensor
      - NIR optical sensor
      - Payload optical sensor
      - Strain gauge

Design Overview Continued

- Major Components (cont' d)
  - Electrical: Provide 3.7 V @ 700mA power for each experiment
    - Store data (memory), sampling sensors
  - Programming:
    - Arduino (C++ variant)
    - Raspberry Pi (Script)
  - Heritage:
    - Various devices have been flown by members of team on RSC-15

WVU-CAM Electrical Diagram

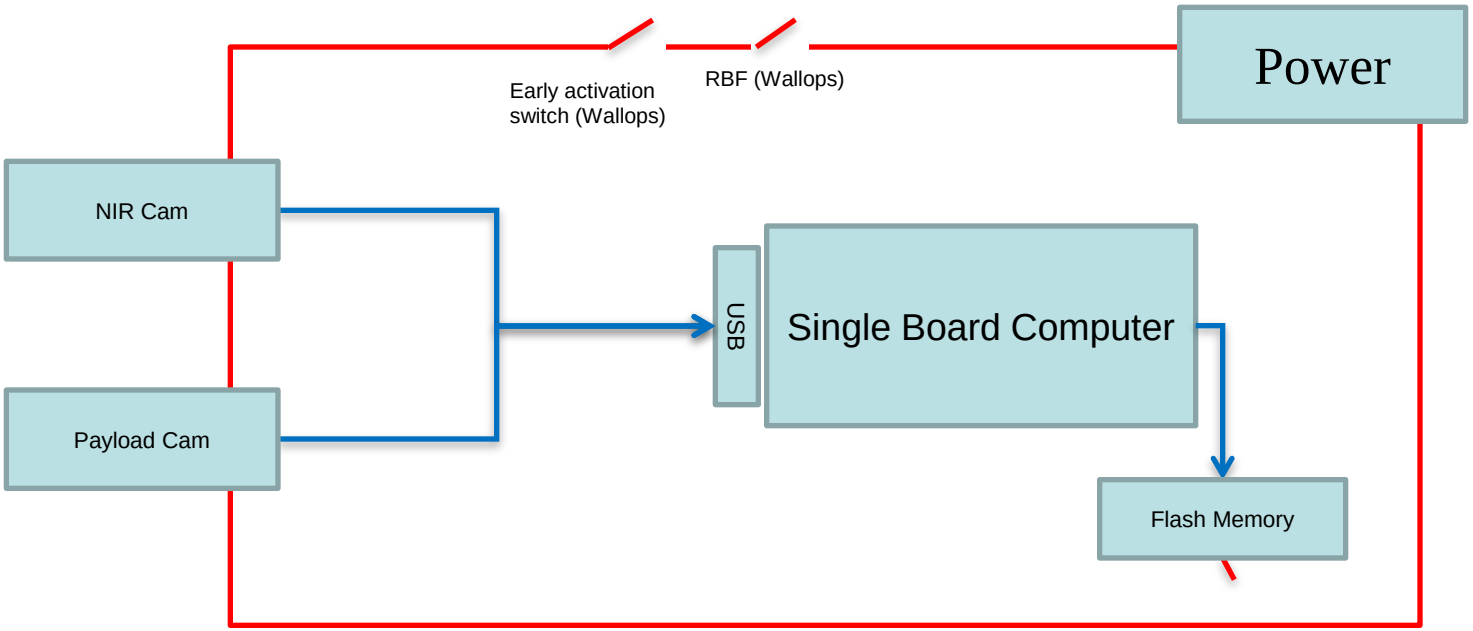

Power
Data

WVWC-SPACE Electrical Diagram

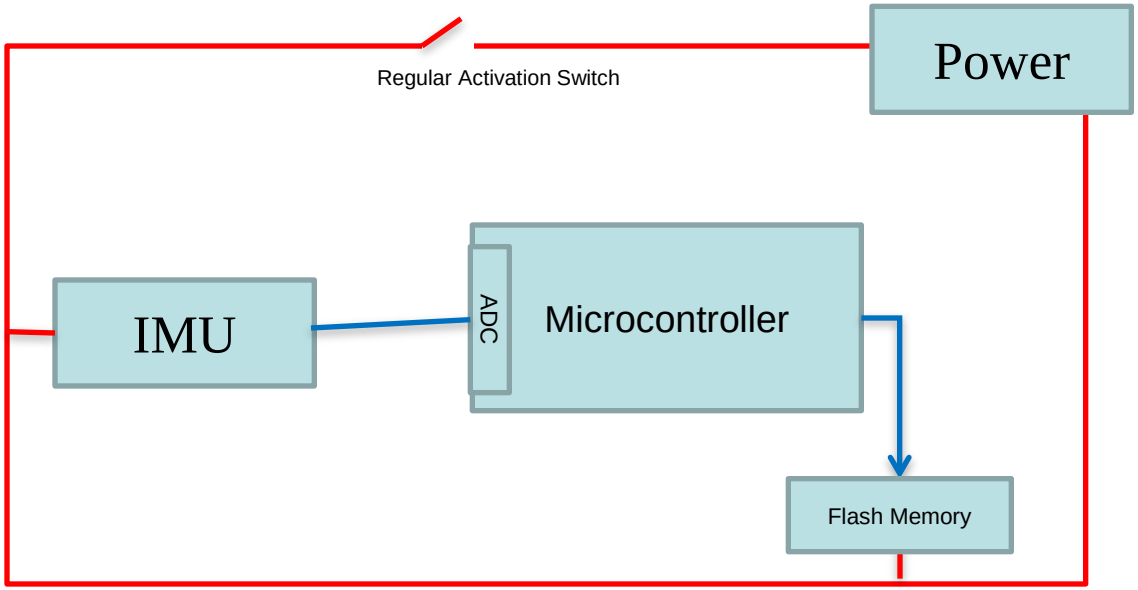

Power
Data

Shepherd-SPACE Electrical Diagram

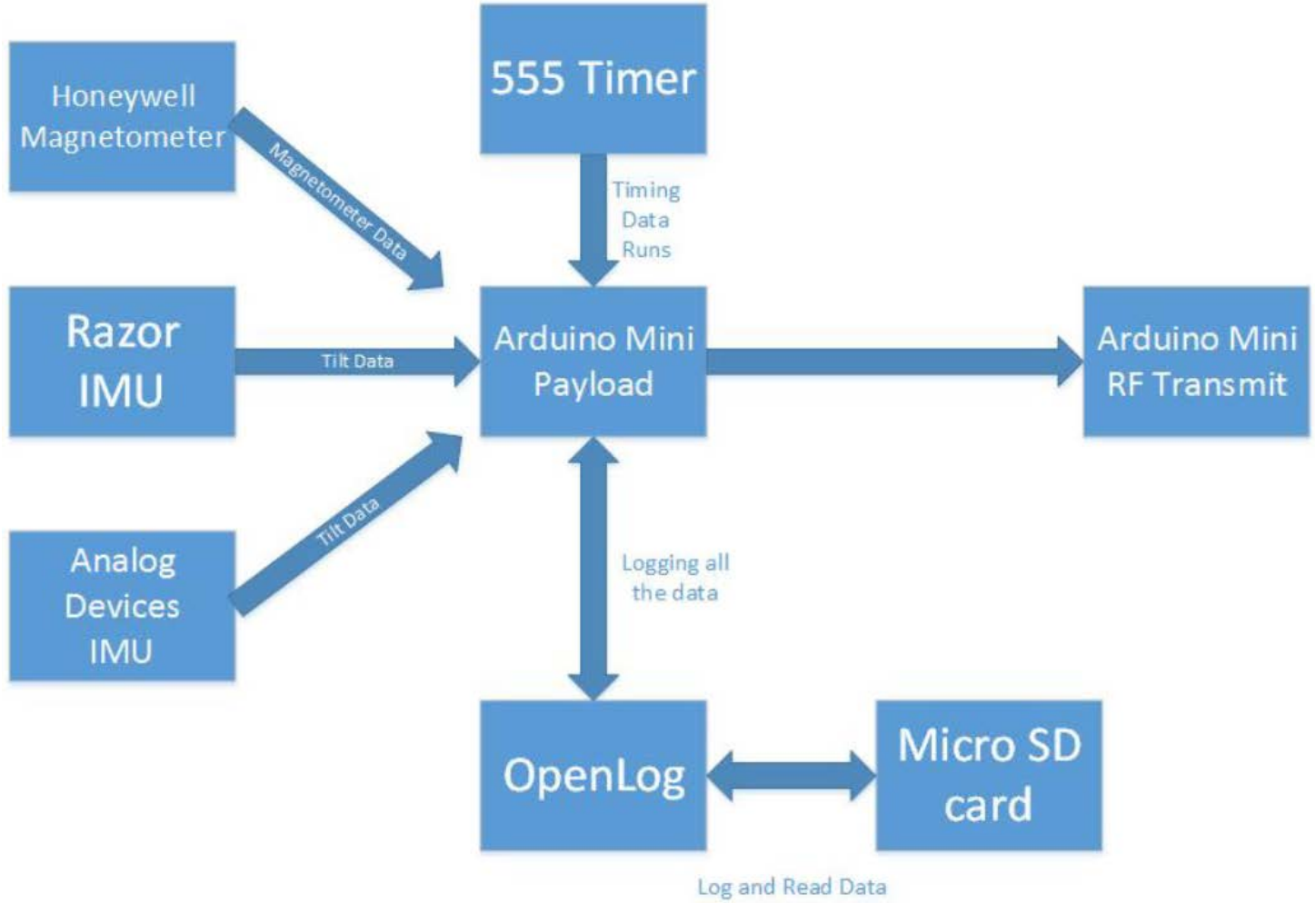

Marshall-SPACE Electrical Diagram

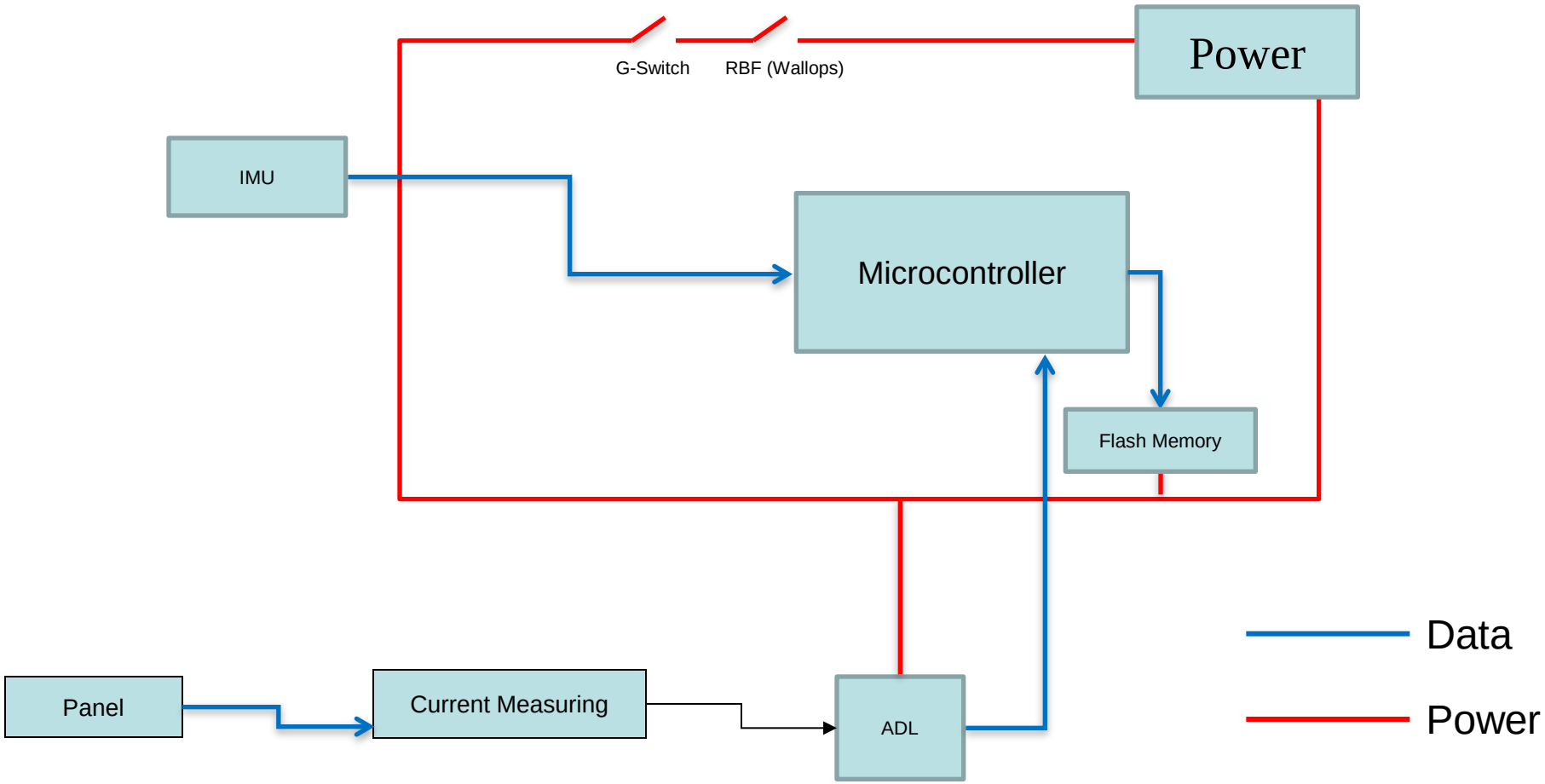

WVUTECH-SPACE Electrical Diagram

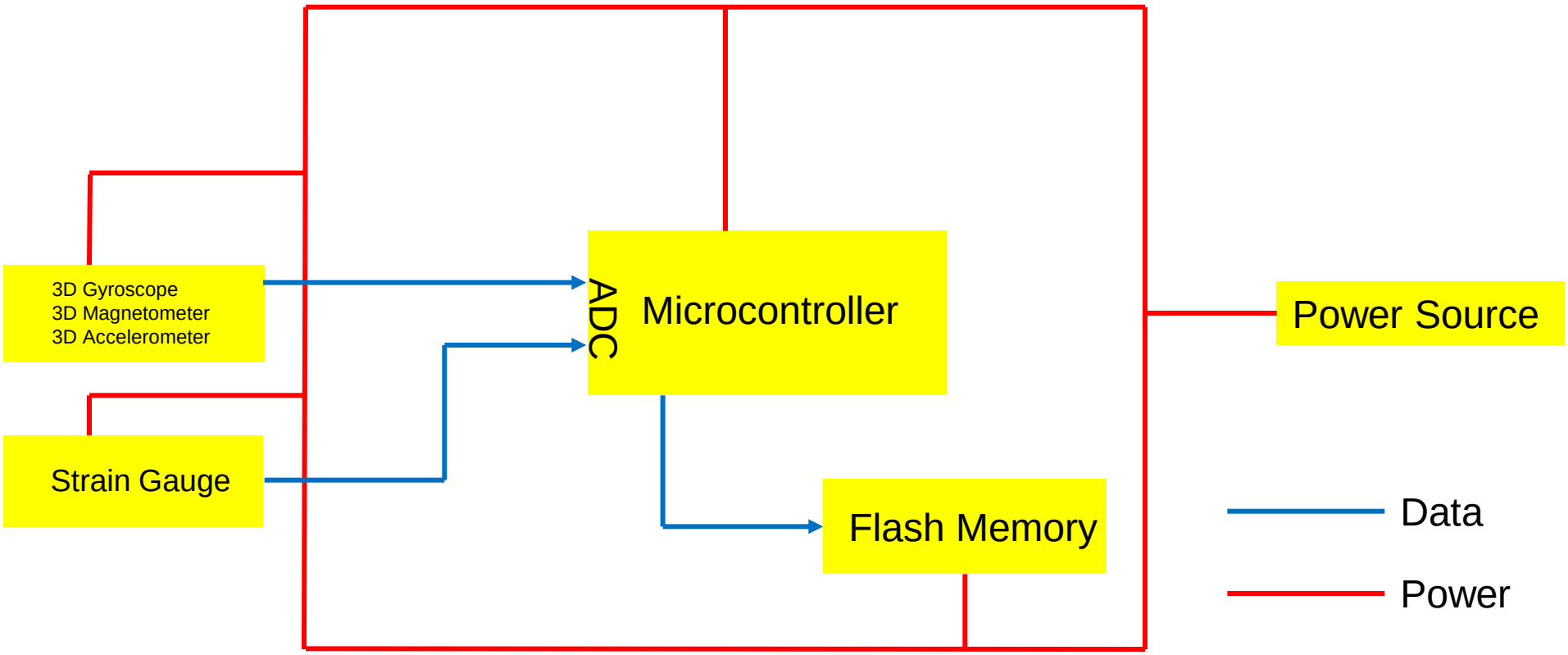

FSU-Space Electrical Diagram

BRCTC-SPACE Electrical Diagram

BVCTC-SPACE Electrical Diagram

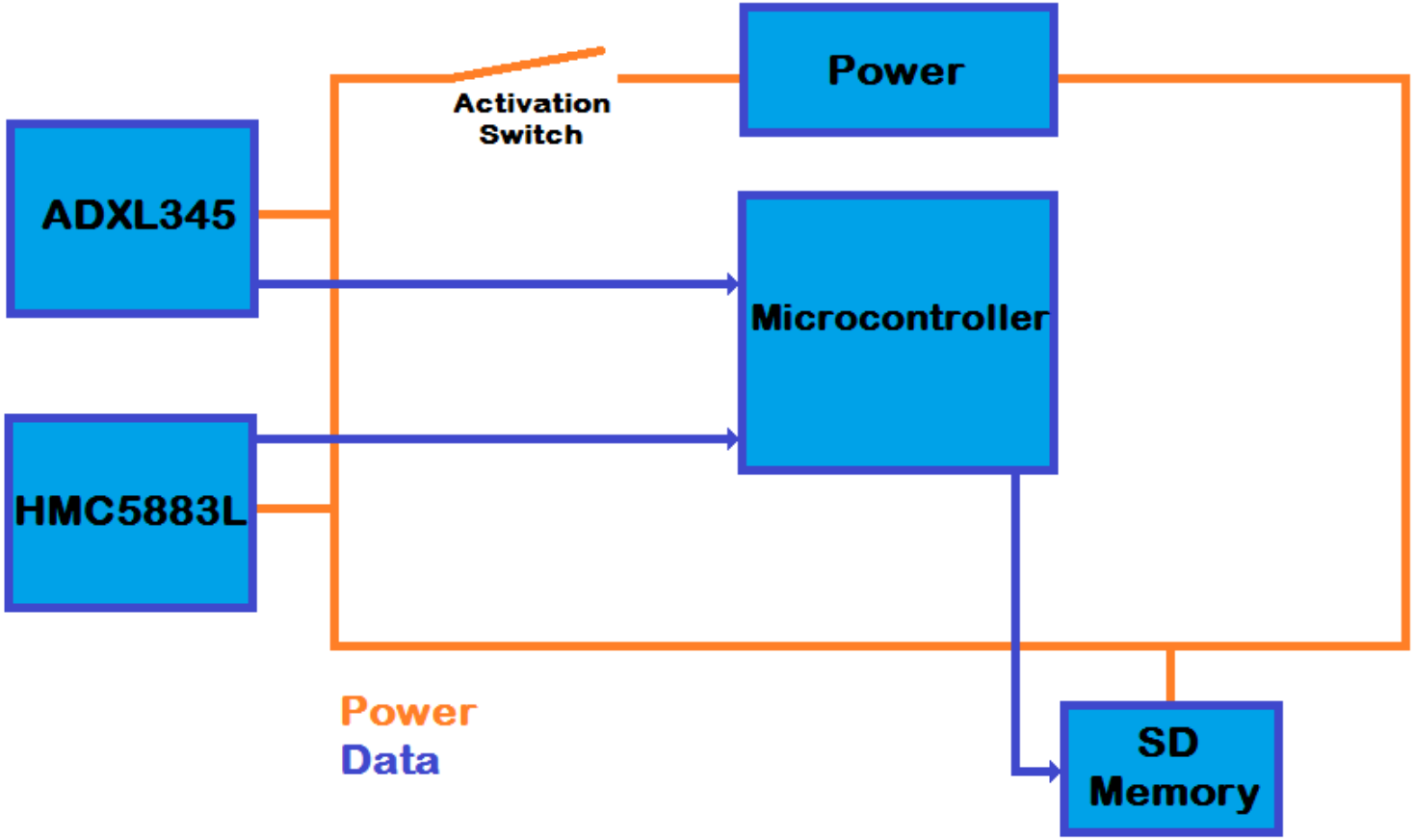

FBD – Lower mechanical/system (rough diagram)

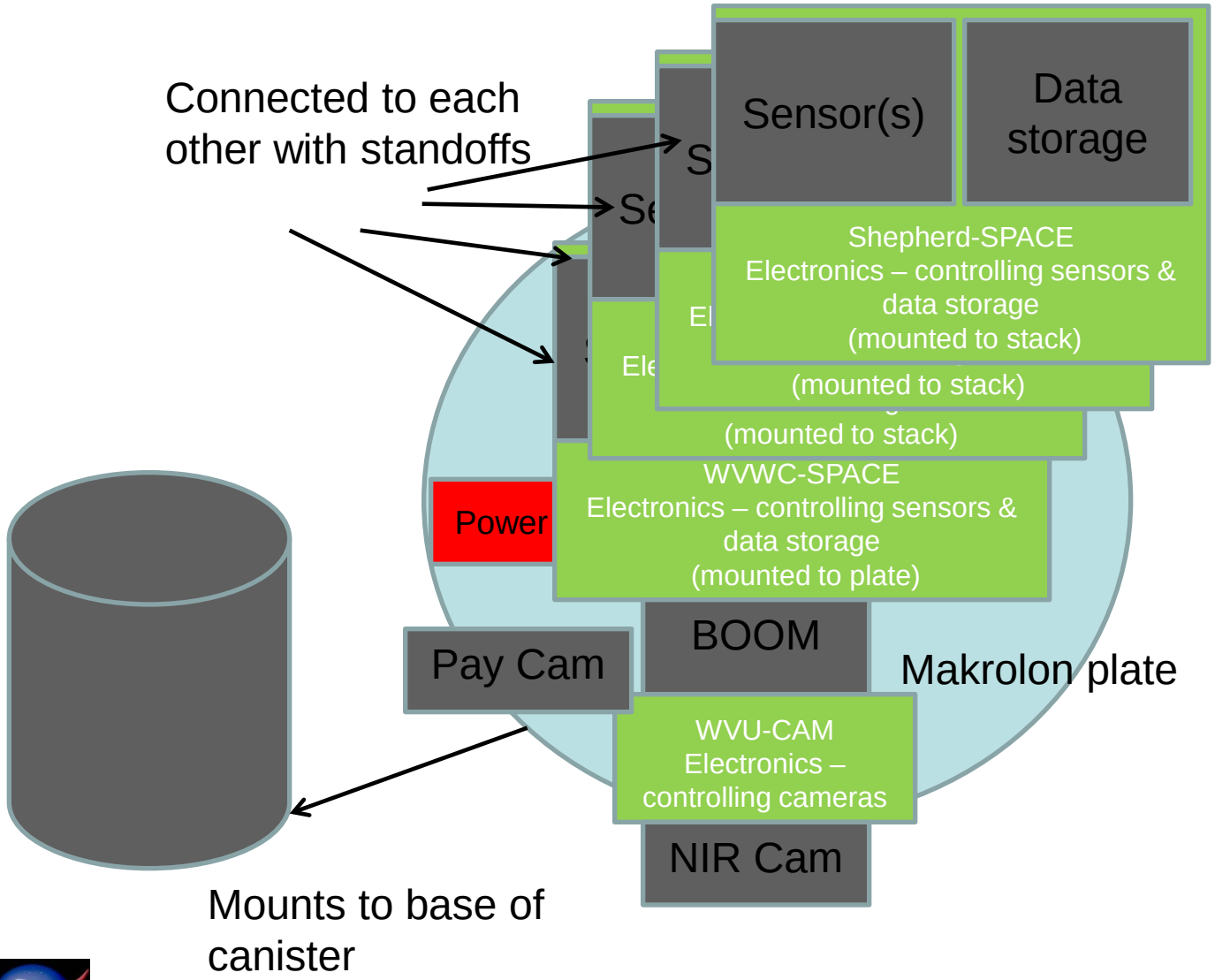

FBD – Upper mechanical/system (rough diagram)

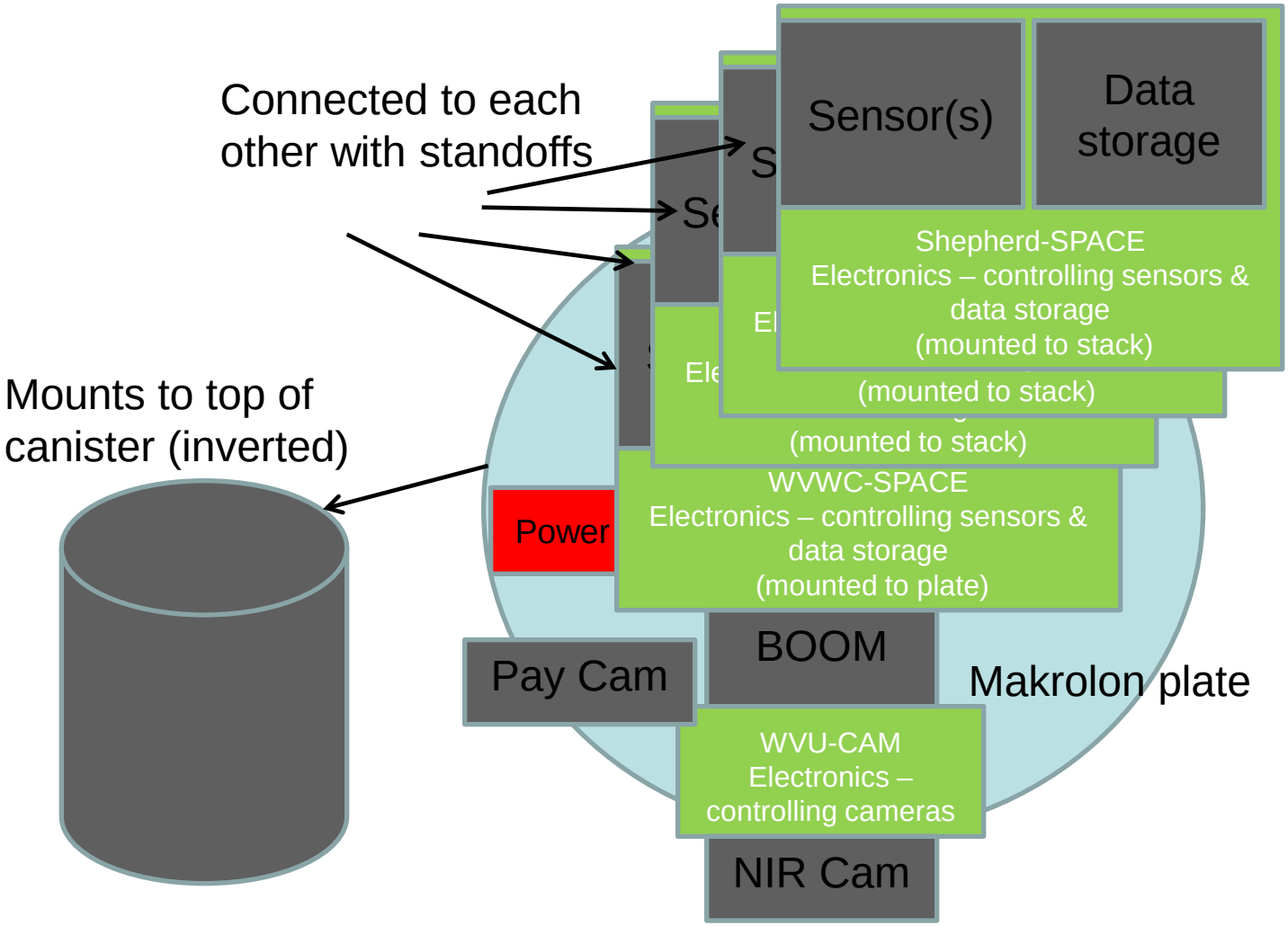

Design Overview: Payload Canister Layout

- Single plate (x2)
  - 4”x4” double layer PCB stack for SPACE experiments
    - 8 Total PCBs
  - Horizontal boom mount for BOOM experiment
  - NIR cam mounted on BOOM experiment
  - Payload camera mount facing inward

classymommy.com

Design Overview: Payload Canister Layout

- All Flight Dynamics experiments will be in four 2-layer stacks
  - Two stacks on top, two on bottom
  - Each layer designed similarly (~4”x4” flight dynamics board)
  - Will resemble a CubeSat stack with all payload boards
    - Separated by 1.5” standoffs
- All other experiments will be fixed to middle Makrolon plate in unoccupied areas

Design Overview: RockSat-C 2013 User's Guide Compliance

- User's Guide Requirements
  - Predicted mass: ~13 lb
  - Predicted volume: Whole can
  - Activation type: Early activation
    - T-3mins
    - One activation only
  - Special requests: Ports
    - Optical and atmospheric port

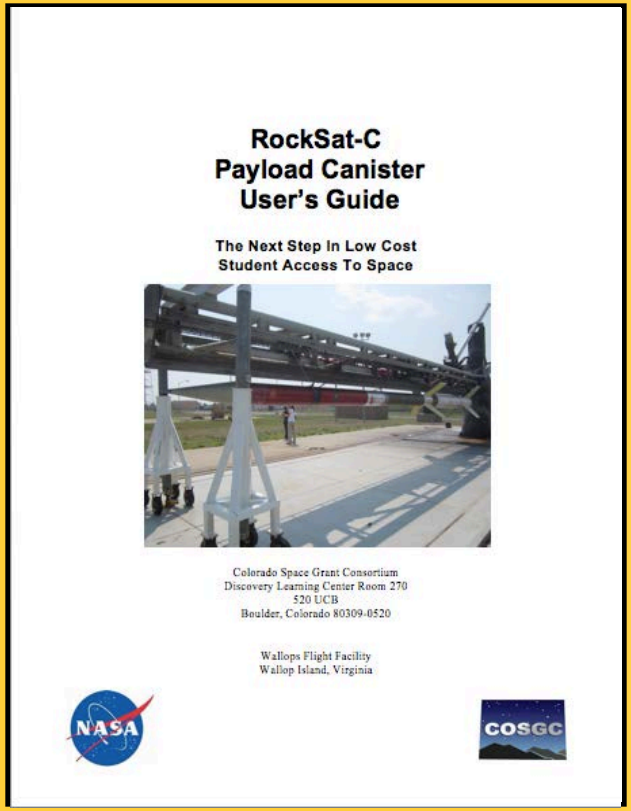
RockSat-C
Payload Canister
User's Guide

The Next Step In Low Cost
Student Access To Space

Colorado Space Grant Consortium
Discovery Learning Center Room 270
520 UCB
Boulder, Colorado 80309-0520

Wallops Flight Facility
Wallop Island, Virginia

Design Overview: Shared Can Logistics

- Partners (NASA IV&V Sponsored):
  - West Virginia University Team: WVU-CAM
  - West Virginia Wesleyan College: WVWC-SPACE
  - Shepherd University: Shepherd-SPACE
  - Marshall University: Marshall-SPACE
  - West Virginia University Institute of Technology: WVUTECH-SPACE
  - Fairmont State University: FSU-SPACE
  - Bridge Valley Community Technical College: BVCTC-SPACE
  - Blue Bridge Community Technical College: BRCTC-SPACE
  - West Virginia State University: WVSU-SPACE

grandpmr.com

Design Overview: Shared Can Logistics

- Plan for collaboration
  - Weekly/Monthly Telecon session
  - Share designs using Google drive
  - Will fit check before June
- Mounting to top and bottom plate
- No mid mounting plate
- Ports:
  - Optical port
  - Atmospheric port

Project Management

Steven Hard

Management (3-4 slides)

- Preliminary schedule for the semester
  - Weekly/monthly telecons in preparation for PDR
  - Rotate by team/experiment
- Monetary budget – covered
- Team mentors (industry, faculty)
  - NASA IV&V Facility

Don't let the schedule sneak up on you!

Team Contact Matrix

Institution	Team Member	Email Address	Phone Number	US Person?
NASA IVV	**Steven Hard (Project Lead)**	Steven.L.Hard@nasa.gov	304-367-8287	Y
WVU	**Dimitris Vassiliadis (Advisor)**	Dimitris.Vassiliadis@mail.wvu.edu	304-293-4920	Y
	Greg Lusk (Integration Lead)	grglusk@gmail.com		Y
	Vida Golubovic (Review Coordinator)	vidarocksatc@gmail.com		Y
	Abigail Ida (Team Lead)	abigailida2@gmail.com		Y
	Sebastian Reger (EE Lead)	swreger@mix.wvu.edu		Y
	Josh Waggoner	jdwaggoner@mix.wvu.edu		Y
	Josh Hiett	hiett_js@wvwc.edu		Y
WVU Tech	**Farshid Zabihian (Advisor)**	Farshid.Zabihian@mail.wvu.edu	304-442-3280	Y
	Yadi Eslami (Advisor)	Yadollah.EslamiAmirabadi@mail.wvu.edu		Y
	Scotty Browning (Team Lead)	wsbrowning@mix.wvu.edu		Y
	Zach Dixon	zdixon@mix.wvu.edu		Y
	Robert Leibel	rsleibel@mix.wvu.edu		Y
	Wade (Conrad) Lacey	wlacey@mix.wvu.edu		Y
	Roger Targosky	rjtargosky@mix.wvu.edu		Y

Team Contact Matrix (cont.)

Marshall	**Jon Saken (Advisor)**	saken@marshall.edu	304-696-2753	Y
	Nicole George (Team Lead)	george94@marshall.edu		Y
WVWC	**Tracey Delaney (Advisor)**	delaney_t@wvwc.edu	304-473-8330	Y
	Tiffin, Andrew (Team Lead)	tiffin_a@wvwc.edu		Y
Shepherd	**Ralph Wojtowicz (Advisor)**	rwojtowi@shepherd.edu	304-876-5783	Y
	Rachelle Huff (Team Lead)	rhuff02@rams.shepherd.edu		Y
	Andy Shtanko (SE Lead)	iqvasya@gmail.com		Y
WVSU	**Marek Krasnansky (Advisor)**	mkrasnansky@wvstateu.edu	304-766-3257	Y
	Brandi Bricker (Team Lead)	bbricker@wvstateu.edu		Y
FSU	**Debra Hemler (Advisor)**	Deb.Hemler@fairmontstate.edu		Y
	Donald Trisel (Advisor)	Donald.Trisel@fairmontstate.edu		Y
	David Vazquez (Team Lead)	dvazquez1@studentsfairmontstate.onmicrosoft.com		Y

Team Contact Matrix (cont.)

BRCTC	**David Teets (Advisor)**	dteets@blueridgectc.edu	304-260-4380 ext. 3412	Y
	Ronald Willis (Team Lead)	rwilli12@my.blueridgectc.edu		Y
	Walter Willis	wwilli07@my.blueridgectc.edu		Y
BVCTC	**Shahed Mustafa (Advisor)**	Shahed.Mustafa@bridgevalley.edu	304-734-6671	Y
	Richard Hall (Advisor)	Richard.Hall@bridgevalley.edu		Y
	Jonathan Stolling (Team Lead)	Stollings2@my.bridgevalley.edu		Y
	Greg Hawk (ME Lead)	ghawk@mix.wvu.edu		Y
	James Brogen (EE Lead)	jbrogan@my.bridgevalley.edu		Y
	David Whittington (SE Lead)	whittington2@my.bridgevalley.edu		Y

We expect to receive more updates to this list as teams continue to add members.

Team Availability Matrix

WV-SPACE					
Fall 2015 RS-C Team Availability Matrix					
	PLEASE USE MOUNTAIN TIME ZONE TIMES				
	Monday	Tuesday	Wednesday	Thursday	Friday
7:00 AM	No	No	No	No	No
8:00 AM	No	No	No	Yes	No
9:00 AM	No	No	No	Yes	Yes
10:00 AM	No	No	No	Yes	No
11:00 AM	No	Yes	Yes	No	Yes
12:00 PM	No	Yes	Yes	No	Yes
1:00 PM	No	Yes	Yes	Yes	Yes
2:00 PM	Yes	Yes	Yes	Yes	Yes
3:00 PM	No	Yes	Yes	Yes	Yes
4:00 PM	No	Yes	No	Yes	Yes
5:00 PM	Yes	Yes	No	Yes	Yes

Conclusion

- Overall Mission: To design and test a science payload in space
  - System shall provide knowledge and hands-on experience to students for future space endeavors
- Issues, concerns, any questions
- Plan for where you will take your design from here?
  - Atmospheric gas research & concepts
  - Electrical FBDs
  - Mechanical FBDs
  - Programming tutorials and demonstrations