National Aeronautics and
Space Administration

Lyndon B. Johnson Space Center
White Sands Test Facility
P.O. Box 20
Las Cruces, NM 88004-0020

March 30, 2016

RE-16-050

Mr. John E. Kieling, Chief
New Mexico Environment Department
Hazardous Waste Bureau
2905 Rodeo Park Drive East, Building 1
Santa Fe, NM 87505-6303

Subject: Well Reconfiguration Reports for Wells BLM-32, WW-4, and WW-5

On December 11, 2011, NMED issued an Approval with Modifications of NASA's October 20, 2011 *Investigation Report for Evaluating Representativeness of Groundwater Samples Collected from Westbay Wells.* Within the Approval with Modifications, NMED directed NASA to replace or convert eight existing Westbay multiport monitoring system wells to wells with purgeable sampling systems. On January 16, 2013, NMED approved the Westbay well conversion work plan for replacing the well construction and groundwater purging systems within the eight Westbay groundwater monitoring wells at NASA White Sands Test Facility (WSTF).

In accordance with that approved work plan, and additional correspondence between NMED and NASA, NASA has completed the reconfiguration of three additional Westbay™ wells. Groundwater monitoring wells BLM-32, WW-4, and WW-5 were recently reconfigured from Westbay sampling systems to multiport sampling systems manufactured by Flexible Liner Underground Technology, LLC. (FLUTe™). The Westbay casing was removed from each of the wells and a Water FLUTe sampling system was installed in each after various work was performed on the boreholes or conventional casings. Reconfiguration of monitoring well BLM-32 was completed on August 14, 2015 and initial sampling was performed on November 23, 2015. Monitoring well WW-4 was reconfigured on November 9, 2015 and initial sampling was performed on December 14 and 15, 2015. Reconfiguration of monitoring well WW-5 was completed on November 10, 2015 and initial sampling was performed on January 25 and 26, 2016. Analytical data are provided for the first sampling event at each reconfigured well. NASA expects to continue sampling these wells routinely in accordance with the WSTF Groundwater Monitoring Plan to obtain adequate data upon which to base conclusions regarding the long-term utility of Water FLUTe sampling systems. Enclosure 1 provides a reconfiguration report for monitoring well BLM-32. Enclosure 2 provides a reconfiguration report for monitoring wells WW-4 and WW-5. Enclosure 3 provides a CD-ROM containing the reports in PDF format.

Groundwater monitoring well BLM-28 was also scheduled for reconfiguration at the same time as monitoring well BLM-32. NASA planned to reconfigure BLM-28 using an inflatable packer to isolate a portion of the borehole in which a dedicated low-flow bladder pump was to be installed. However, significant delays in the acquisition of the specialized downhole sampling system resulted in postponement of that reconfiguration. Subsequent issues with the compatibility of the equipment received from an off-site vendor continue to delay final reconfiguration of that monitoring well. NASA is working with the off-site sampling equipment provider to resolve these issues and will continue to update NMED on the status of the BLM-28 reconfiguration in the monthly Environmental Activity Reports.

I certify under penalty of law that this document and all enclosure were prepared under my direction or supervision in accordance with a system designed to assure that qualified personnel properly gather and evaluate the information submitted. Based on my inquiry of the person or persons who manage the system, or those persons directly responsible for gathering the information, the information submitted is, to the best of my knowledge and belief, true, accurate, and complete. I am aware that there are significant penalties for submitting false information including the possibility of fine and imprisonment for knowing violations.

If you have any questions or comments concerning this submittal, please contact Mike Zigmond of my staff at 575–524–5484.

Timothy J. Davis
Chief, Environmental Office

3 Enclosures

cc: (with enclosures)
Mr. Gabriel Acevedo
New Mexico Environment Department
Hazardous Waste Bureau
2905 Rodeo Park Drive East, Building 1
Santa Fe, NM 87505

National Aeronautics and
Space Administration

BLM-32 Well Reconfiguration Summary Report

March 2016

NM8800019434
NASA Johnson Space Center White Sands Test Facility
12600 NASA Road Las Cruces, New Mexico 88012

NASA Johnson Space Center White Sands Test Facility

BLM-32 Well Reconfiguration Summary Report

March 2016

I certify under penalty of law that this document and all attachments were prepared under my direction or supervision in accordance with a system designed to assure that qualified personnel properly gather and evaluate the information submitted. Based on my inquiry of the person or persons who manage the system, or those persons directly responsible for gathering the information, the information submitted is, to the best of my knowledge and belief, true, accurate, and complete. I am aware that there are significant penalties for submitting false information, including the possibility of fine and imprisonment for knowing violations.

Timothy J. Davis
Chief, NASA Environmental Office

3/30/16
Date

Table of Contents

Table of Contents iii
List of Figures and Tables iv
List of Acronyms v
1.0 Introduction 1
2.0 Well BLM-32 Background 1
3.0 Well Reconfiguration 2
3.1 Westbay Casing Removal 2
3.2 Preparation 2
3.3 Transmissivity Testing 2
3.4 Borehole Backfilling 3
3.5 Sampling System Installation 3
4.0 Sampling and Analysis 3
5.0 Survey Information 4
6.0 Waste Management 4
7.0 Work Plan Deviations 4
8.0 References 4
Figures 6
Tables 11
Appendix A BLM-32 Initial FLUTe Sampling Analytical Data Table A-1

List of Figures and Tables

Figure 2.1 BLM-32 Well Location 7
Figure 2.2 BLM-32 Original Westbay Well Completion Diagram 8
Figure 3.1 Borehole BLM-32 Transmissivity Results/Potential Sampling Zones 9
Figure 3.2 BLM-32 FLUTe Well Completion Diagram 10
Table 4.1 Analytes Detected During First BLM-32 Water FLUTe Sampling Event 12

List of Acronyms

bgs	Below ground surface
BLM	Bureau of Land Management
FLUTe	Flexible Liner Underground Technologies, LLC
ft	Foot/feet
in.	Inch(es)
JSC	Johnson Space Center
NASA	National Aeronautics and Space Administration
NDMA	N-nitrosodimethylamine
NMED	New Mexico Environment Department
WSTF	White Sands Test Facility

1.0 Introduction

At the National Aeronautics and Space Administration (NASA) Johnson Space Center (JSC) White Sands Test Facility (WSTF), 44 groundwater monitoring wells were historically equipped with Westbay®[1] multiport groundwater sampling systems. In a letter dated June 25, 2010, the New Mexico Environment Department (NMED) directed NASA to develop and submit an investigation work plan for evaluating the representativeness of groundwater samples collected from Westbay groundwater monitoring wells at WSTF (NMED, 2010). NASA submitted the work plan to NMED on November 19, 2010 (NASA, 2010). The investigation was conducted, and the investigation report was submitted to NMED on October 20, 2011 (NASA, 2011). NMED issued an Approval with Modifications on December 16, 2011, directing NASA to replace or convert eight existing WSTF wells equipped with Westbay multiport monitoring systems to purgeable sampling systems (NMED, 2011). NASA submitted the *Westbay Well Conversion Work Plan* on November 1, 2012 (NASA, 2012b). The work plan provided information and scheduling for the replacement of Westbay sampling systems within the required eight groundwater monitoring wells at NASA WSTF. NMED approved the work plan on January 16, 2013 (NMED, 2013).

WSTF groundwater monitoring well Bureau of Land Management (BLM)-32 was scheduled for conversion from a Westbay to a purgeable sampling system by December 2013 (NASA, 2012a). However, delays with converting the first scheduled wells resulted in deferral of additional Westbay well conversions. On February 24, 2014, NASA proposed a revised Westbay well conversion schedule to NMED, requesting an extension for removing the Westbay casing and evaluating the BLM-32 borehole to November 30, 2014 (NASA, 2014a). NMED approved the revised conversion schedule on March 7, 2014 (NMED, 2014a). The submittal date was extended to mid-December in a telephone call between NASA and NMED on November 25, 2014; however, due to scheduling issues, procurement delays, and the necessity to evaluate the borehole, NASA continued to request time extensions for the conversion of Westbay well BLM-32 (NASA, 2014b, 2015b, 2015c). NMED granted time extensions to May 31, 2015, July 31, 2015, and March 31, 2016 (NMED, 2014b, 2015a, 2015b).

This report provides a summary of field activities associated with the reconfiguration of monitoring well BLM-32 from a non-purgeable multiport Westbay sampling system to a purgeable sampling system. Field activities were performed between October 24, 2014 and November 23, 2015, and included removing the Westbay casing, video logging the borehole, transmissivity testing using a Flexible Liner Underground Technologies, LLC (FLUTe™[2]) blank liner, partially back-filling the borehole with 6/9 sand, installing a purgeable sampling system (Water FLUTe) within the borehole, purging groundwater from the three chosen sampling zones for development, and collecting the first groundwater samples from the three sampling zones.

2.0 Well BLM-32 Background

Well BLM-32 is located in the WSTF 600 Area in Section 28, Township 20 South, Range 3 East (Figure 2.1). The well was installed as part of a groundwater monitoring well network at WSTF to identify the horizontal and vertical extent of a groundwater contamination plume consisting of trichloroethene, tetrachloroethene, N-nitrosodimethylamine (NDMA), and several Freon®[3] compounds.

The BLM-32 borehole was drilled using mud and air-foam rotary drilling methods to a total depth of 750 feet (ft) below ground surface (bgs) between May 29, 1997 and June 20, 1997. The well was originally

[1] Westbay is a registered trademark of Nova Metrix LLC.
[2] FLUTe is a registered trademark of Flexible Liner Underground Technologies, LLC.
[3] Freon is a registered trademark of E.I. du Pont de Nemours & Company Corporation (DuPont).

completed with 376 ft of 5 ½-inch (in.) outside diameter steel surface casing within an 8 ¾-in. borehole drilled with mud rotary. From 376 ft, a 4 ½-in. borehole was drilled with air-foam rotary to a total depth of 750 ft bgs. Original casing installation information for well BLM-32 is presented below.

- 1 ½-in. inside diameter Westbay polyvinyl chloride casing.
- Sampling zone 1: 570-590 ft bgs; sampling port at 580 ft.
- Sampling zone 2: 635-650 ft bgs; sampling port at 645 ft.
- Sampling zone 3: 705-725 ft bgs; sampling port at 715 ft.
- Total depth of Westbay well casing: 740 ft bgs.
- Depth to groundwater in the borehole was 518 ft bgs (from geophysics) within rhyolite bedrock.

Figure 2.2 provides the BLM-32 monitoring well construction diagram with the original Westbay well casing prior to reconfiguration.

3.0 Well Reconfiguration

Well reconfiguration activities consisted of removing the Westbay system casing from the borehole, evaluating the open borehole by conducting video logging and transmissivity testing, installing a multi-zone purgeable Water FLUTe sampling system, and purging the sampling zones to become familiar with the Water FLUTe sampling system.

3.1 Westbay Casing Removal

On October 24, 2014, Westbay personnel perforated the packers of the Westbay casing within borehole BLM-32 in preparation for Westbay casing removal. On November 5, 2014, the subcontracted drilling company mobilized to WSTF and removed the Westbay casing from BLM-32 in its entirety, without complications. Following removal, the casing was cut into short sections of approximately 3 ft in length, decontaminated using a heated pressure washer, characterized as non-hazardous, and packaged for off-site disposal.

3.2 Preparation

The BLM-32 borehole was allowed to equilibrate after Westbay casing removal and a video log was conducted on November 13, 2014. The video log and original borehole geophysical logs were reviewed in order to determine if borehole BLM-32 produced adequate groundwater to use a purgeable sampling system. These reviews were inadequate, and further borehole testing was required to determine optimal locations for potential sampling zones.

3.3 Transmissivity Testing

A FLUTe blank liner system was used to evaluate the transmissivity of the BLM-32 borehole and identify potential sampling intervals. The blank FLUTe liner is made of watertight, urethane-coated, nylon fabric and is filled with water to provide constant head to evert the liner down the borehole. As the FLUTe blank liner is installed, water is forced from the borehole into the formation through natural flow paths (fractures, permeable beds, etc.). The liner descent rate is controlled by the rate water can flow from the borehole along those natural flow paths, and initially is a measure of the transmissitvity of the entire borehole. As the liner seals flow paths, changes in the liner velocity indicate the position of each flow path and transmissivity is estimated using the Thiem equation for steady radial flow.

Transmissivity testing using a blank FLUTe liner was conducted in BLM-32 on April 1, 2015. The blank liner remained, sealing the borehole until the Water FLUTe sampling system was installed in August 2015. Figure 3.1 shows transmissivity testing results (in blue), the new potential sampling zones (outlined in brown), and the previous Westbay sampling system zone depths listed on the diagram for comparison. As shown on Figure 3.1, the sampling zones selected for the BLM-32 borehole based on the transmissivity test are not identical to the sampling zones used in the Westbay casing. The top Water FLUTe sampling zone (543-563 ft) is above the former top Westbay sampling zone (570-590 ft). Also, the lowermost Westbay zone (705-725 ft) was not used with the Water FLUTe sampling system due to low transmissivity observed during the test.

3.4 Borehole Backfilling

Three sampling zones were chosen within the BLM-32 borehole based on the transmissivity testing conducted with the FLUTe blank liner. The borehole was backfilled by gravity feed with 6/9 Colorado silica sand from 678 ft bgs to the total depth of the borehole at 750 ft bgs. The total amount of sand installed was 16 (50-pound) bags (each filling approximately 0.5 cubic ft).

3.5 Sampling System Installation

The Water FLUTe sampling system was installed in borehole BLM-32 on August 13 and 14, 2015. Sampling zones with the new system and groundwater depth are:

- 543-563 ft (previously unsampled zone).
- 571-591 ft (coincides with former Westbay measuring port at 580').
- 632-647 ft (coincides with former Westbay measuring port at 645').
- Depth to groundwater was 530.17 ft bgs (measured on 8/13/15).

Figure 3.2 provides the reconfigured BLM-32 well completion diagram with the new sampling system installed.

4.0 Sampling and Analysis

Immediately following installation of the Water FLUTe sampling system within borehole BLM-32, the sampling zones were purged ten times each in order for sampling personnel to become familiar with operation of the system and to help remove potentially stagnant groundwater from the adjacent fractures prior to sampling. Well BLM-32 was sampled using the newly installed Water FLUTe system on November 23, 2015. Groundwater samples were collected for analysis of volatile organic compounds, semi-volatile organic compounds, NDMA, bromacil, perchlorate, total dissolved solids, nitrite/nitrate, anions, and several metals in accordance with the NMED-approved Groundwater Monitoring Plan (NASA, 2015a). Groundwater samples were shipped off site for analysis at the contracted analytical laboratories. Chemical analytical data were received, verified and validated in accordance with established NASA procedures, and archived in the permanent analytical database at WSTF. Analytes detected in samples collected during the November 2015 sampling event at BLM-32 are presented in Table 4.1.

All chemical analytical data from the November 2015 sampling event are provided in Appendix A. Several compounds were tentatively identified in samples collected during the first sampling event using the Water FLUTe at BLM-32. These analytes are included in Appendix A but not in Table 4.1.

5.0 Survey Information

The location and elevation of well BLM-32 was surveyed by a registered land surveyor in 2011 as part of a project to survey new WSTF groundwater monitoring wells and resurvey all existing WSTF monitoring wells. Using New Mexico State Plan (Central Zone) NAD 83, surveyed coordinates were Northing 558870.47 ft and Easting 1519464.23 ft, with a brass cap elevation of 4597.18 ft above mean sea level. NASA anticipates that BLM-32 will be resurveyed in conjunction with a future surveying project; however, the results of that survey are not expected to differ significantly from these well location coordinates and elevation.

6.0 Waste Management

All investigation-derived waste was managed in accordance with applicable federal, state, and local regulations. Removed Westbay well casing was decontaminated with heated high pressure water and cut into manageable lengths (approximately 3 ft). The casing pieces were placed in bulk bags (Super Sacks) for shipment off site and disposed as solid waste at a permitted facility. Purged groundwater from BLM-32 was collected and transferred daily to an established less than 90-day storage area. Purged groundwater was then transported to the Mid-plume Interception and Treatment System for treatment and disposal in accordance with the Groundwater Monitoring Plan (NASA, 2015a). Potentially contaminated debris (gloves, wipes, etc.) was bagged and also placed in an existing 90-day storage area prior to shipment for disposal at a permitted off-site facility.

7.0 Work Plan Deviations

There were no deviations from the NMED-approved *Westbay Well Conversion Work Plan* (NASA, 2012b) during this Westbay well conversion project.

8.0 References

NASA Johnson Space Center White Sands Test Facility. (2010, November 19). *Westbay Well Evaluation Work Plan*. Las Cruces, NM.

NASA Johnson Space Center White Sands Test Facility. (2011, October 20). *NASA WSTF Westbay Well Evaluation Investigation Report.* Las Cruces, NM.

NASA Johnson Space Center White Sands Test Facility, (2012a, June 13). *Schedule for Conversion of Westbay Wells.* Las Cruces, NM.

NASA Johnson Space Center White Sands Test Facility. (2012b, November 1). *Westbay Well Conversion Work Plan.* Las Cruces, NM.

NASA Johnson Space Center White Sands Test Facility. (2014a, February 24). *Request for Revised Westbay Well Conversion Schedule*. Las Cruces, NM.

NASA Johnson Space Center White Sands Test Facility. (2014b, December 18). *Status of Westbay Well Conversions at NASA WSTF*. Las Cruces, NM.

NASA Johnson Space Center White Sands Test Facility. (2015a, April 29). *NASA WSTF Groundwater Monitoring Plan Update for 2015*. Las Cruces, NM.

NASA Johnson Space Center White Sands Test Facility. (2015b, May 28). *Request for Extension of Time for Conversion of Westbay Wells BLM-28 and BLM-32 at NASA WSTF*. Las Cruces, NM.

NASA Johnson Space Center White Sands Test Facility. (2015c, October 29). *Request for Extension of Time for Conversion of Westbay Wells BLM-28, WW-4, and WW-5*. Las Cruces, NM.

NMED Hazardous Waste Bureau. (2010, June 25). *National Aeronautics and Space Administration (NASA) Johnson Space Center (JSC) White Sands Test Facility (WSTF) Quarterly Groundwater Monitoring Fourth Quarter 2009.* Santa Fe, NM.

NMED Hazardous Waste Bureau. (2011, December 16). *Approval with Modifications Investigation Report for Evaluating the Representativeness of Groundwater Samples Collected from Westbay Wells.* Santa Fe, NM.

NMED Hazardous Waste Bureau. (2013, January 16). *Approval Westbay Well Conversion Work Plan.* Santa Fe, NM.

NMED Hazardous Waste Bureau. (2014a, March 7). *Approval Extension Request Revised Westbay Well Conversion Schedule.* Santa Fe, NM.

NMED Hazardous Waste Bureau. (2014b, December 29). *Approval of Time Extension Request National Aeronautics Space Administration (NASA) Lyndon B. Jonson Space Center (JSC) White Sands Test Facility (WSTF) Status of Westbay Well Conversion at NASA WSTF BLM-28 and BLM-32 Doña Ana County, New Mexico EPA ID #NM08800019434 HWb-NASA-10-008.* Santa Fe, NM.

NMED Hazardous Waste Bureau. (2015a, June 17). *Approval Request for Extention [sic] of Time for the Conversion of Westbay Wells BLM-28 and BLM-32.* Santa Fe, NM.

NMED Hazardous Waste Bureau. (2015b, December 2). *Approval Request for Extension of Time for Conversion of Westbay Wells BLM-28, WW-4, and WW-5*. Santa Fe, NM.

Figures

Figure 2.1 **BLM-32 Well Location**

(SEE NEXT PAGE)

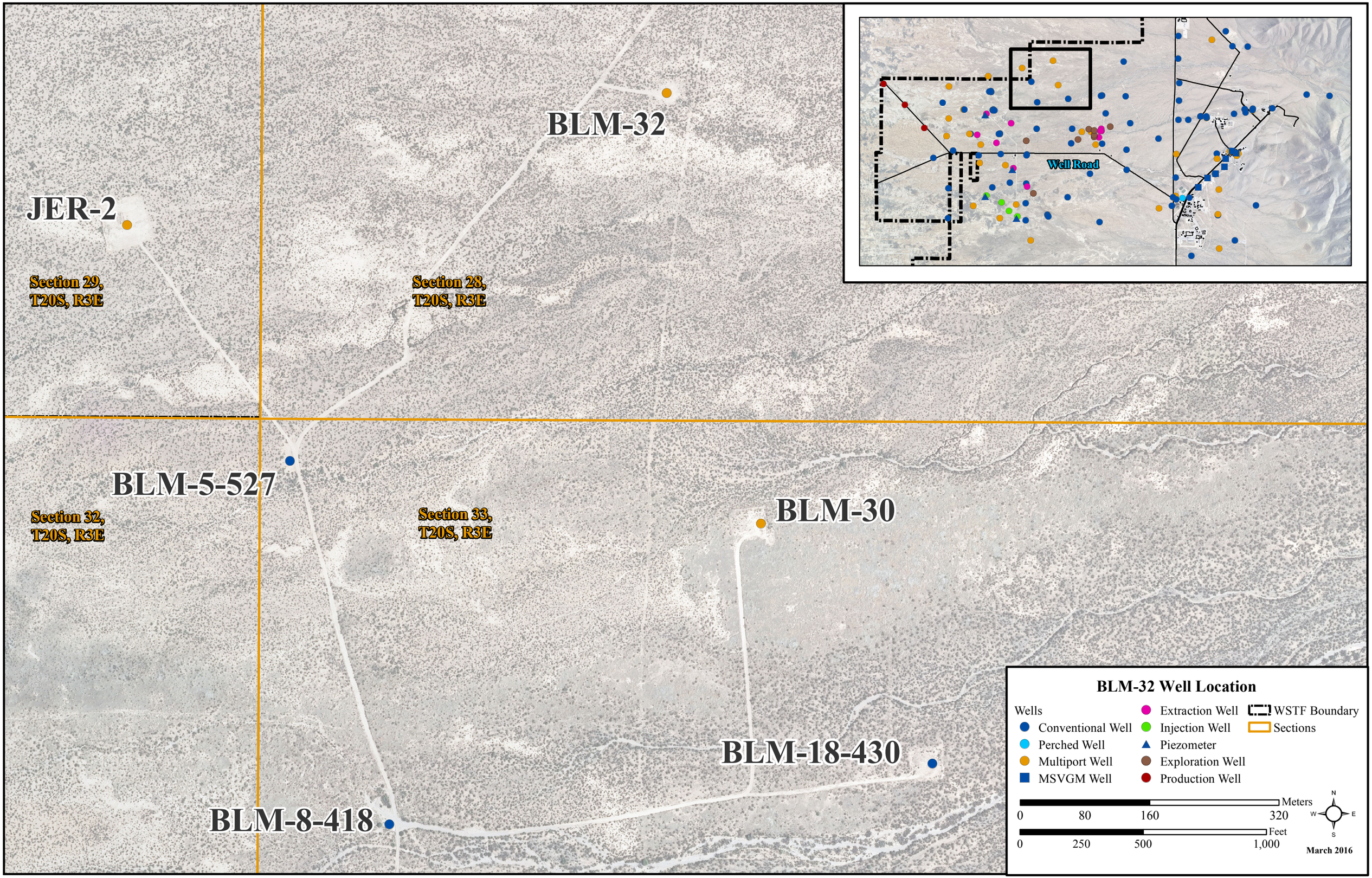
BLM-32
JER-2
Section 29,
T20S, R3E
Section 28,
T20S, R3E
BLM-5-527
Section 32,
T20S, R3E
Section 33,
T20S, R3E
BLM-30
BLM-18-430
BLM-8-418
Well Road
BLM-32 Well Location
Wells
Conventional Well
Perched Well
Multiport Well
MSVGM Well
Extraction Well
Injection Well
Piezometer
Exploration Well
Production Well
WSTF Boundary
Sections
Meters
0
80
160
320
Feet
0
250
500
1,000
N
W
E
S
March 2016

Figure 2.2 BLM-32 Original Westbay Well Completion Diagram

(SEE NEXT PAGE)

WELL COMPLETION DIAGRAM

WESTBAY® MONITORING WELL

JSC - White Sands Test Facility
Las Cruces, New Mexico, USA

Location ID: **BLM-32**

Site ID: **NASA-WSTF, Doña Ana County, NM**

Township and Range: **SW 1/4 NE 1/4 SW 1/4 Sec. 28, T20S, R3E**
NM State Plane Coordinates (NAD 83 in meters): **170344.13N 463133.09E**
Elevation (Brass Cap): **1401.23 m AMSL**
Elevation (Top of Casing): **1401.65 m**
Drilling Contractor: **Stewart Brothers Drilling Company**
Driller: **V. Amaro**
Total Depth of Borehole (bgs): **750' (228.6 m); sloughed to 744' (226.8 m)**
Borehole Diameter: **8 3/4" 0-376'; 4 1/2" 376-750'**
Depth to Bedrock (bgs): **378' (115.2 m); Rhyolite**
Depth to Groundwater: **518' (157.9 m) bgs (6/10/97) per geophysics**
Total Depth Surface Casing (bgs): **376' (114.6 m)**
Diameter and Type Surface Casing: **5 1/4" ID Steel**
Date(s) Well Installed: **6/18/97 - 6/20/97**

Date(s) Well Developed: **BH = 6/7/97 - 6/8/97; WB = unknown**
Field Representative(s): **P. Egan, G. Giles, M. Russell, J. Pearson**
Total Depth Well Casing (bgs): **740' (225.6 m)**
Type of Casing: **Westbay® MP 38 PVC**
Diameter Well Casing: **1.5" ID; 1.9" OD**
WB Sampling Port(s)(bgs): **580' (177.81 m); 645' (197.52 m); and 715' (218.79 m)**
WB Packer Zone(s)(bgs): **570-590' (174.78-180.86 m); 635-650' (194.51-199.04 m); and 705-725' (215.76-221.84 m)**
Comments: **Depths (meters) for WB components and zones are a calculated value based on piezometric levels at MPs.**
bgs = below ground surface
AMSL = Above Mean Sea Level

Surface Casing
5 1/4" ID Steel

1.5" ID Westbay® MP38 Casing

Casing Explanation:
1.5" ID Westbay® MP38 End Cap
Packer

Measurement Port (MP)
MP with Filter Sock
Mechanical Pumping Port (PP)
Magnetic Collar
Water Table
Cement
Slough

Feet/Meters

Well Descriptions
All depths listed are bgs (unless noted)

Annular/Borehole Descriptions
All depths listed are bgs

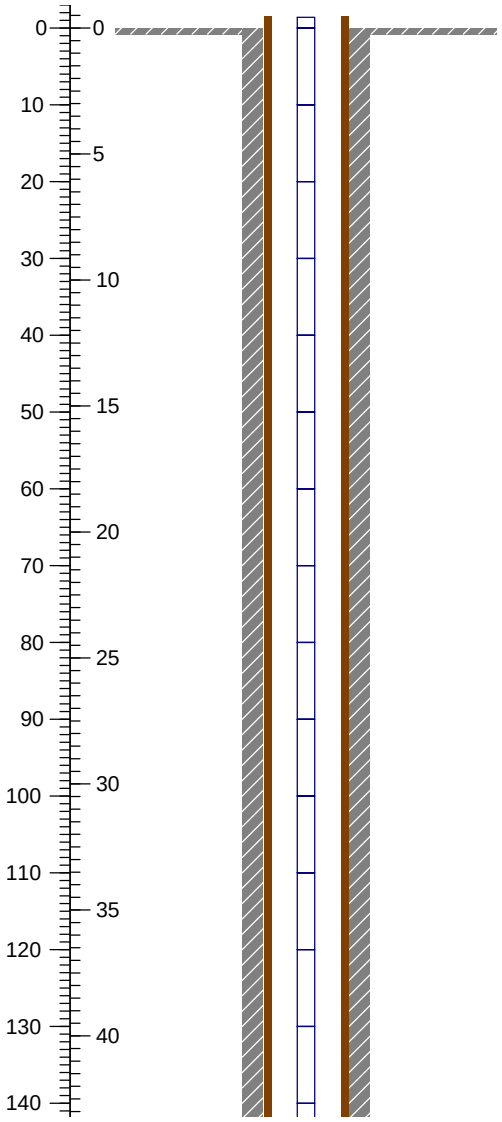

Westbay® Well Stick-Up = 1.4' (0.419 m)
Surface Casing Stick-Up = ~1.48' (0.5 m)
Well completed with ~3' x ~3' cement pad, barrier posts, and locking steel well cap surrounding the casing at ground surface

Surface Casing
5 1/4" ID Steel

1.5" ID Westbay® MP38 Casing

Casing Explanation:

1.5" ID Westbay® MP38 End Cap

Packer

Measurement Port (MP)

MP with Filter Sock

Mechanical Pumping Port (PP)

Magnetic Collar

Water Table

Cement

Slough

Feet/Meters

Well Descriptions
All depths listed are bgs (unless noted)

Annular/Borehole Descriptions
All depths listed are bgs

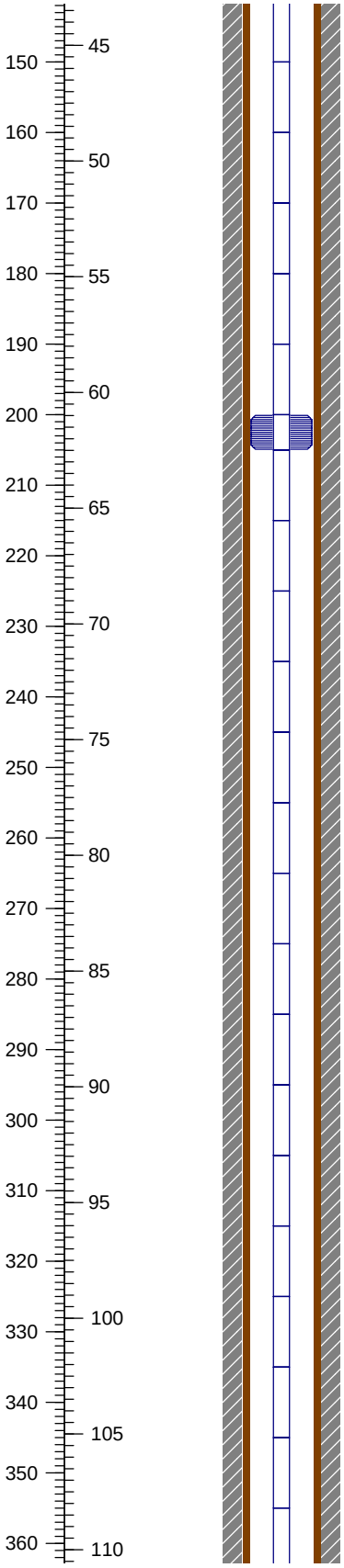

Packer Depth = 200'-205' (60.96-62.48 m)

Surface Casing **5 1/4" ID Steel**	**Casing Explanation:** **1.5" ID Westbay® MP38 End Cap**	Measurement Port (MP) MP with Filter Sock Mechanical Pumping Port (PP)	Magnetic Collar Water Table	Cement Slough
1.5" ID Westbay® MP38 Casing	Packer			

Feet/Meters

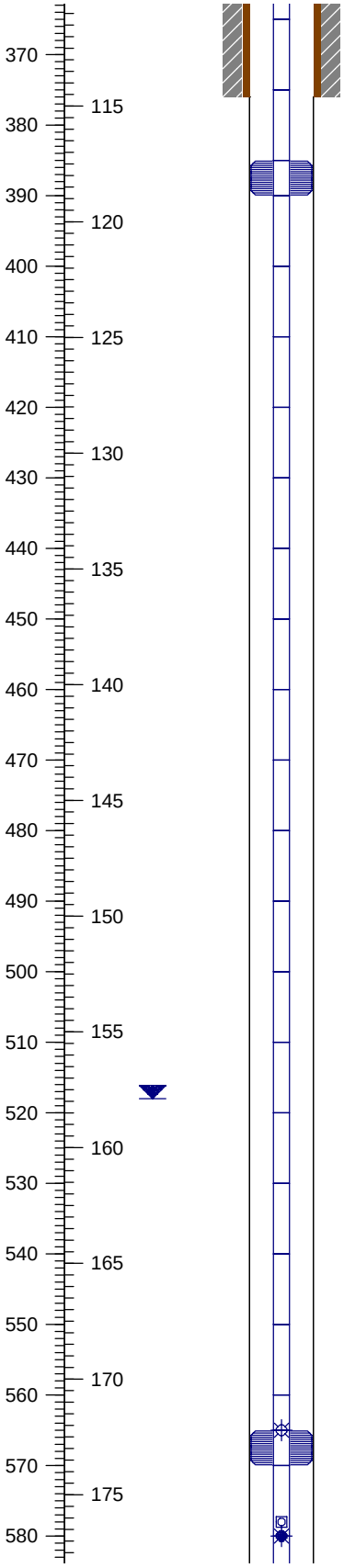

Well Descriptions
All depths listed are bgs (unless noted)

5 1/4" ID (5 1/2" OD) Steel Surface Casing Depth = 376' (114.6 m)

Packer Depth = 385'-390' (117.35-118.87 m)

Depth to Water = 518' (157.9 m)(Borehole; measured 6/10/97 (bgs) from Geophysical Logs)

MP Depth = 565' (173.26 m)

Packer Depth = 565'-570' (173.26-174.78 m)

Magnetic Collar Depth = 579' (177.51 m)(Exact Location Not Recorded)

Sampling MP Depth (with Filter Sock) = 580' (177.81 m)

Annular/Borehole Descriptions
All depths listed are bgs

8 1/2" Borehole cemented to 376' (114.6 m)

Rhyolite Bedrock Depth = 378' (115.2 m)

Surface Casing
5 1/4" ID Steel

1.5" ID Westbay® MP38 Casing

Casing Explanation:

1.5" ID Westbay® MP38 End Cap

Packer

Measurement Port (MP)

MP with Filter Sock

Mechanical Pumping Port (PP)

Magnetic Collar

Water Table

Cement

Slough

Feet/Meters

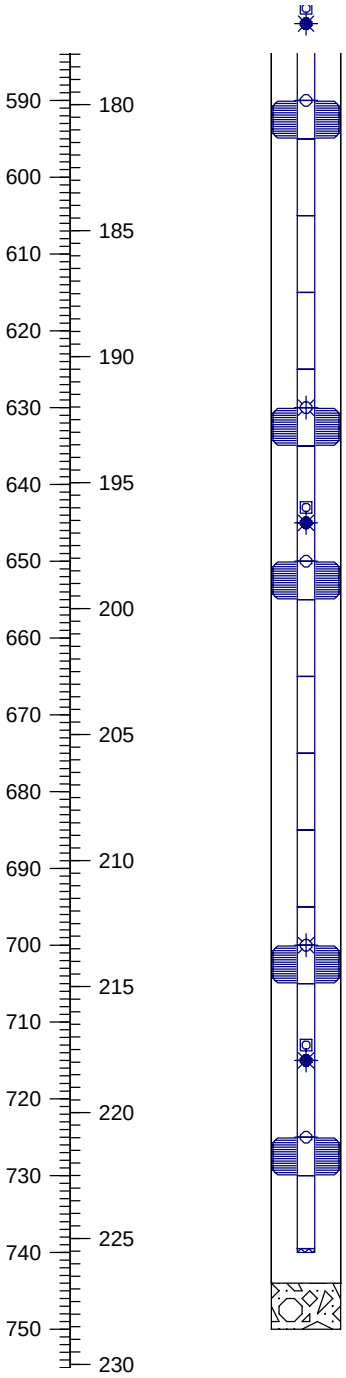

Well Descriptions All depths listed are bgs (unless noted)	**Annular/Borehole Descriptions** All depths listed are bgs
PP Depth = 590' (180.86 m)	
Packer Depth = 590'-595' (180.86-182.38 m)	
MP Depth = 630' (192.99 m)	
Packer Depth = 630'-635' (192.99-194.51 m)	
Magnetic Collar Depth = 644' (197.22 m)(Exact Location Not Recorded)	
Sampling MP Depth (with Filter Sock) = 645' (197.52 m)	
PP Depth = 650' (199.04 m)	
Packer Depth = 650'-655' (199.04-200.57 m)	
MP Depth = 700' (214.24 m)	
Packer Depth = 700'-705' (214.24-215.76 m)	
Magnetic Collar Depth = 714' (218.49 m)(Exact Location Not Recorded)	
Sampling MP Depth (with Filter Sock) = 715' (218.79 m)	
PP Depth = 725' (221.84 m)	
Packer Depth = 725'-730' (221.84-223.36 m)	
Westbay® MP 38 Casing TD = 740' (225.6 m)	Top of Slough = 744' (226.8 m)
4 1/2" Borehole TD = 750' (228.6 m)	

Figure 3.1 Borehole BLM-32 Transmissivity Results/Potential Sampling Zones

(SEE NEXT PAGE)

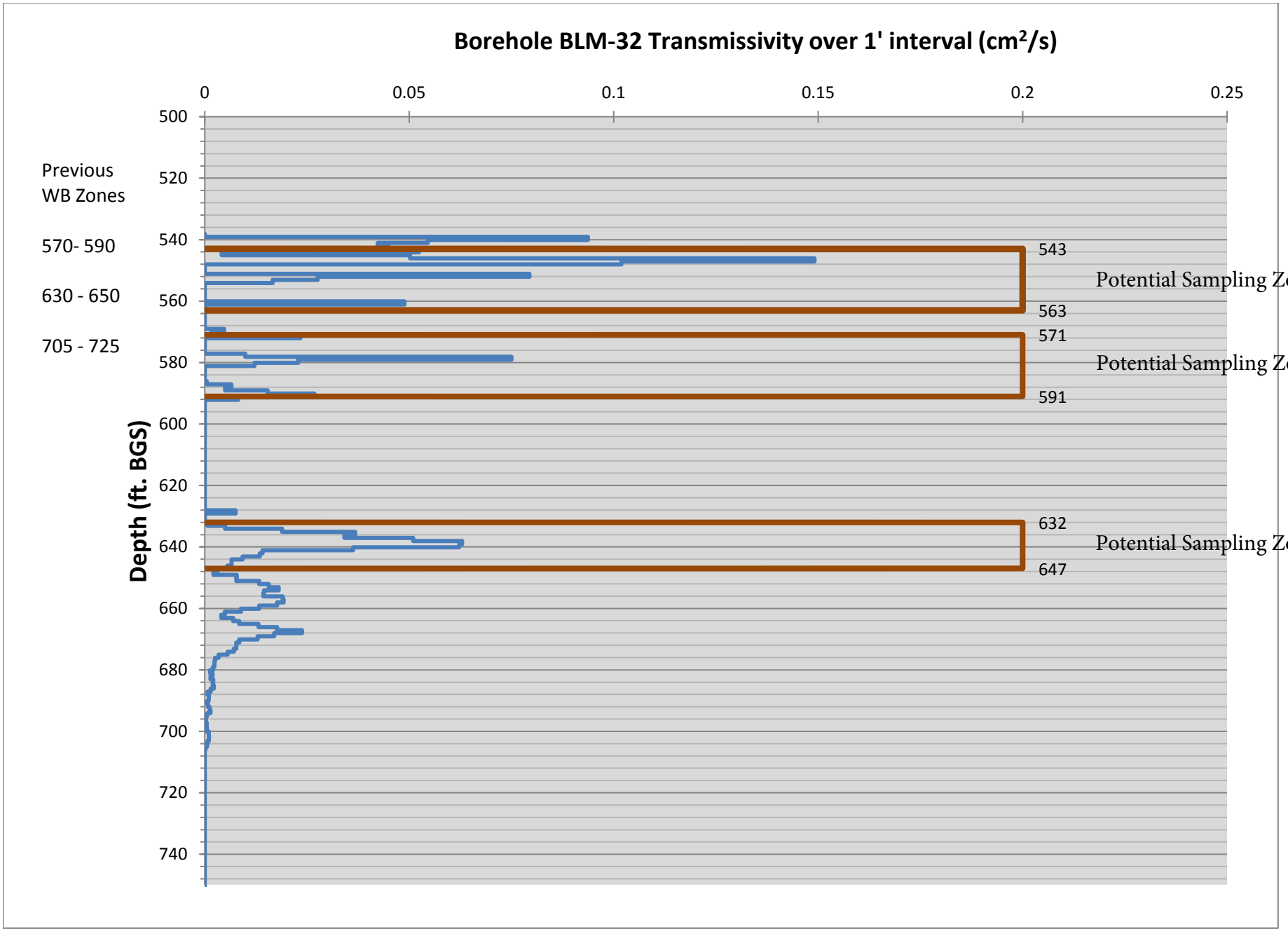
Borehole BLM-32 Transmissivity over 1' interval (cm²/s)
0
0.05
0.1
0.15
0.2
0.25
Depth (ft. BGS)
500
520
540
560
580
600
620
640
660
680
700
720
740
Previous
WB Zones
570- 590
630 - 650
705 - 725
543
563
571
591
632
647
Potential Sampling Zone 1
Potential Sampling Zone 2
Potential Sampling Zone 3

Figure 3.2 BLM-32 FLUTe Well Completion Diagram

(SEE NEXT PAGE)

BLM-32 Water FLUTe INSTALLATION DIAGRAM

Brass Cap : 4,597.18' (AMSL)
Coordinates: 558,870.47' N; 1,519,464.23' E
Borehole Diameter: 8 ¾" = 0' - 376';
4 ½" = 376' - 750'
Surface Casing: 5 ¼" carbon steel to 376' bgs

Original Development Start Date: 06/07/97
Original Development End Date: 06/08/97
FLUTe Well Installation Date: 08/13/15

Water Flute Sampling Zones:
543'-563'
571'-591'
632'-647'

Not to Scale
All measurements in ft-bgs unless otherwise noted
Coordinates are NM State Plane (NAD 83 in ft)

Surface Casing Stick-up from brass cap to top of casing: 1.48'

Well Apron Design & Construction:
3' x 3' sloped cement pad, barrier posts, and locking steel well cap surrounding surface casing.

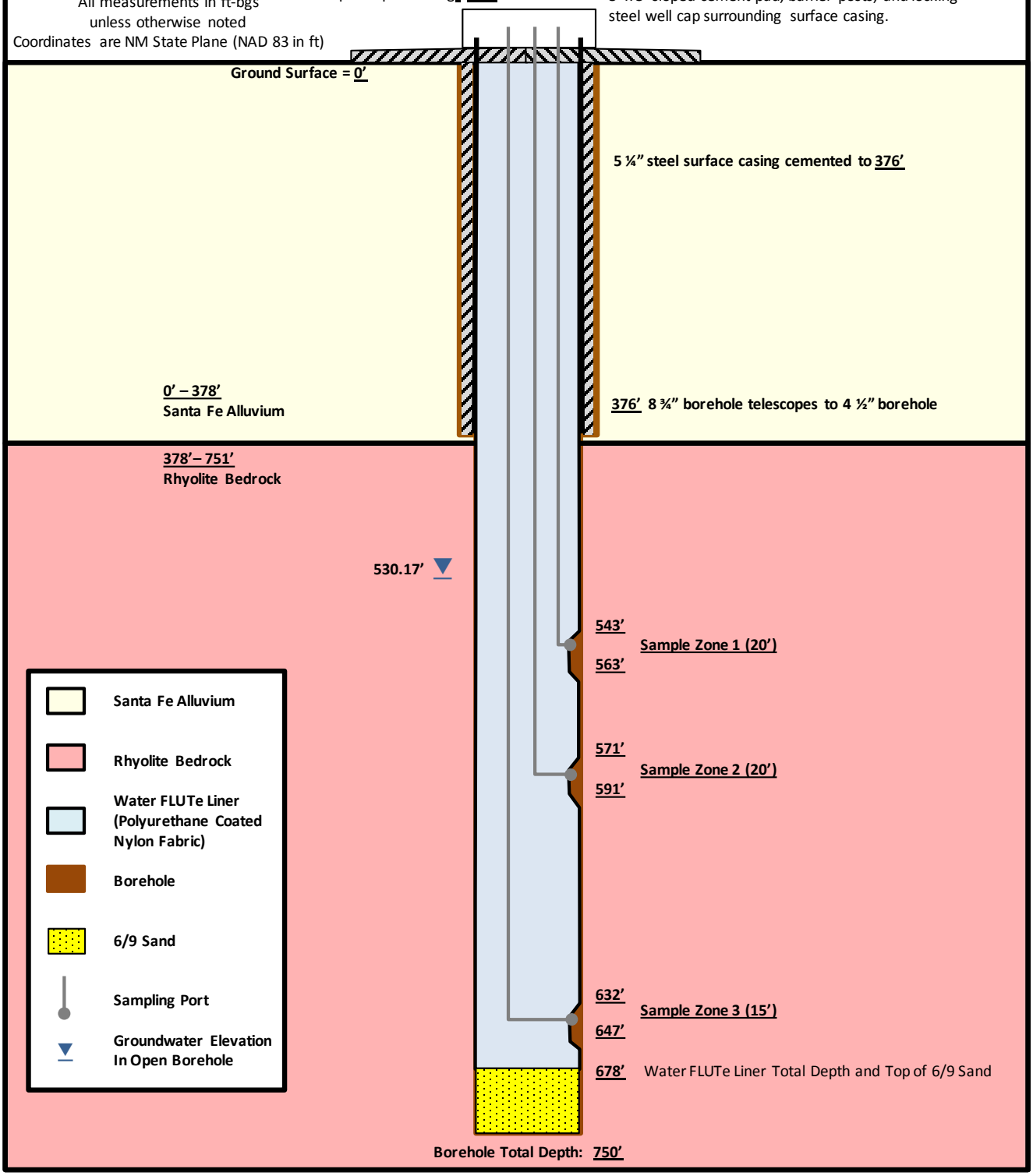

Tables

Table 4.1 Analytes Detected During First BLM-32 Water FLUTe Sampling Event

Analyte	CAS #	Analytical Method	Results	Unit	MDL	PQL	Qualifier
BLM-32-543 – November 23, 2015							
Acetone	67-64-1	8260C	2.9	µg/L	1.3	5	J FB
Benzene	71-43-2	8260C	0.23	µg/L	0.2	0.5	J
4-Methyl-2-pentanone	108-10-1	8260C	0.29	µg/L	0.2	2	J
Nitrate+Nitrite as Nitrogen	NA	353.2	1.15	mg/L	0.003	0.05	
N-Nitrodimethylamine	4164-28-7	NDMA_LL	5.8	ng/L	0.17	0.49	
N-Nitrosodimethylamine	62-75-9	NDMA_LL	21	ng/L	0.36	0.49	
Perchlorate	14797-73-0	6850	0.4	µg/L	0.026	0.2	
Toluene	108-88-3	8260C	2.9	µg/L	0.2	0.5	
Total Dissolved Solids (TDS)	NA	SM2540C	652	mg/L	4	10	
BLM-32-571 – November 23, 2015							
Acetone	67-64-1	8260C	2.1	µg/L	1.3	5	J
Nitrate+Nitrite as Nitrogen	NA	353.2	1.11	mg/L	0.003	0.05	
N-Nitrodimethylamine	4164-28-7	NDMA_LL	2.8	ng/L	0.17	0.49	
N-Nitrosodimethylamine	62-75-9	NDMA_LL	9	ng/L	0.36	0.49	
Perchlorate	14797-73-0	6850	0.39	µg/L	0.026	0.2	
Toluene	108-88-3	8260C	1.5	µg/L	0.2	0.5	
Total Dissolved Solids (TDS)	NA	SM2540C	659	mg/L	4	10	
BLM-32-632 – November 23, 2015							
Acetone	67-64-1	8260C	1.3	µg/L	1.3	5	J
Nitrate+Nitrite as Nitrogen	NA	353.2	1.66	mg/L	0.003	0.05	
N-Nitrodimethylamine	4164-28-7	NDMA_LL	0.39	ng/L	0.17	0.49	J
N-Nitrosodimethylamine	62-75-9	NDMA_LL	1.3	ng/L	0.36	0.49	
Perchlorate	14797-73-0	6850	0.55	µg/L	0.026	0.2	

Table 4.1 Analytes Detected During First BLM-32 Water FLUTe Sampling Event

Analyte	CAS #	Analytical Method	Results	Unit	MDL	PQL	Qualifier
Toluene	108-88-3	8260C	0.85	µg/L	0.2	0.5	
Total Dissolved Solids (TDS)	NA	SM2540C	639	mg/L	4	10	

MDL – Method Detection Limit

PQL – Practical Quantitation Limit

J – Indicates that the analyte was detected above the MDL but below the PQL.

FB – Indicates that the analyte was detected in the field blank.

Appendix A BLM-32 Initial FLUTe Sampling Analytical Data Table

wellname	event_date	sample_number	spec_method	analysis	casno	analyte	result	units	PQL	MDL	extract effiency	qa_flag
BLM-32-543	23-Nov-15	1511231526B	SM 2320 B-1997(20	ANIONS	NA	Alkalinity, Total as CaCO3	200	mg/L	2.0	0.3		
BLM-32-543	23-Nov-15	1511231526B	300.0	ANIONS	16887-00-6	Chloride	49.5	mg/L	2.0	1.0		
BLM-32-543	23-Nov-15	1511231526B	300.0	ANIONS	16984-48-8	Fluoride, undistilled	0.78	mg/L	0.10	0.008		
BLM-32-543	23-Nov-15	1511231526B	300.0	ANIONS	14808-79-8	Sulfate	330	mg/L	8.0	0.8		
BLM-32-543	23-Nov-15	1511231712B	PARAMS	PARAMS	NA	Conductivity	1040	µS/cm	NA	NA		
BLM-32-543	23-Nov-15	1511231712B	PARAMS	PARAMS	NA	pH	8.12	NA	NA	NA		
BLM-32-543	23-Nov-15	1511231712B	PARAMS	PARAMS	NA	Temperature	18.2	ºC	NA	NA		
BLM-32-543	23-Nov-15	1511231712B	PARAMS	PARAMS	NA	Transducer	NA	ft	NA	NA		
BLM-32-543	23-Nov-15	1511231712B	PARAMS	PARAMS	NA	Turbidity	1.45	NTU	NA	NA		
BLM-32-543	23-Nov-15	1511231401B	PARAMS	PARAMS	NA	Conductivity	1002	µS/cm	NA	NA		
BLM-32-543	23-Nov-15	1511231401B	PARAMS	PARAMS	NA	pH	8.65	NA	NA	NA		
BLM-32-543	23-Nov-15	1511231401B	PARAMS	PARAMS	NA	Temperature	20.0	ºC	NA	NA		
BLM-32-543	23-Nov-15	1511231401B	PARAMS	PARAMS	NA	Transducer	NA	ft	NA	NA		
BLM-32-543	23-Nov-15	1511231401B	PARAMS	PARAMS	NA	Turbidity	1.54	NTU	NA	NA		
BLM-32-543	23-Nov-15	1511231523B	6010C	METALS	7429-90-5	Aluminum, Total	ND	mg/L	0.10	0.009		
BLM-32-543	23-Nov-15	1511231523B	6020A	METALS	7440-36-0	Antimony, Total	0.0013	mg/L	0.0010	0.0004		
BLM-32-543	23-Nov-15	1511231523B	6020A	METALS	7440-38-2	Arsenic, Total	0.001	mg/L	0.0010	0.0004		J
BLM-32-543	23-Nov-15	1511231523B	6010C	METALS	7440-39-3	Barium, Total	0.07	mg/L	0.020	0.0008		
BLM-32-543	23-Nov-15	1511231523B	6010C	METALS	7440-41-7	Beryllium, Total	ND	mg/L	0.0030	0.0002		
BLM-32-543	23-Nov-15	1511231523B	6010C	METALS	7440-42-8	Boron, Total	0.12	mg/L	0.20	0.03		J RB
BLM-32-543	23-Nov-15	1511231523B	6010C	METALS	7440-43-9	Cadmium, Total	ND	mg/L	0.0050	0.0002		
BLM-32-543	23-Nov-15	1511231523B	6010C	METALS	7440-70-2	Calcium, Total	83.1	mg/L	5.0	0.3		
BLM-32-543	23-Nov-15	1511231523B	6010C	METALS	7440-47-3	Chromium, Total	ND	mg/L	0.010	0.0004		
BLM-32-543	23-Nov-15	1511231523B	6010C	METALS	7440-48-4	Cobalt, Total	ND	mg/L	0.050	0.0009		
BLM-32-543	23-Nov-15	1511231523B	6010C	METALS	7440-50-8	Copper, Total	ND	mg/L	0.020	0.003		
BLM-32-543	23-Nov-15	1511231523B	6010C	METALS	7439-89-6	Iron, Total	0.36	mg/L	0.10	0.010		
BLM-32-543	23-Nov-15	1511231523B	6010C	METALS	7439-92-1	Lead, Total	ND	mg/L	0.050	0.005		
BLM-32-543	23-Nov-15	1511231523B	6010C	METALS	7439-95-4	Magnesium, Total	58	mg/L	1.0	0.010		
BLM-32-543	23-Nov-15	1511231523B	6010C	METALS	7439-96-5	Manganese, Total	0.493	mg/L	0.010	0.002		
BLM-32-543	23-Nov-15	1511231523B	7470A	METALS	7439-97-6	Mercury, Total	ND	mg/L	0.00020	0.00004		
BLM-32-543	23-Nov-15	1511231523B	6010C	METALS	7439-98-7	Molybdenum, Total	0.008	mg/L	0.025	0.0007		J RB
BLM-32-543	23-Nov-15	1511231523B	6010C	METALS	7440-02-0	Nickel, Total	ND	mg/L	0.040	0.002		
BLM-32-543	23-Nov-15	1511231523B	6010C	METALS	7440-09-7	Potassium, Total	3.1	mg/L	2.0	0.05		
BLM-32-543	23-Nov-15	1511231523B	6010C	METALS	7782-49-2	Selenium, Total	ND	mg/L	0.010	0.005		
BLM-32-543	23-Nov-15	1511231523B	6010C	METALS	7440-22-4	Silver, Total	0.001	mg/L	0.010	0.0006		J
BLM-32-543	23-Nov-15	1511231523B	6010C	METALS	7440-23-5	Sodium, Total	39.6	mg/L	1.0	0.09		
BLM-32-543	23-Nov-15	1511231523B	6010C	METALS	7440-24-6	Strontium, Total	2.1	mg/L	0.10	0.0005		
BLM-32-543	23-Nov-15	1511231523B	6020A	METALS	7440-28-0	Thallium, Total	ND	mg/L	0.0010	0.00003		
BLM-32-543	23-Nov-15	1511231523B	6010C	METALS	7440-31-5	Tin, Total	ND	mg/L	0.50	0.02		
BLM-32-543	23-Nov-15	1511231523B	6010C	METALS	7440-62-2	Vanadium, Total	ND	mg/L	0.050	0.0010		
BLM-32-543	23-Nov-15	1511231523B	6010C	METALS	7440-66-6	Zinc, Total	ND	mg/L	0.020	0.007		

wellname	event_date	sample_number	spec_method	analysis	casno	analyte	result	units	PQL	MDL	extract effiency	qa_flag
BLM-32-543	23-Nov-15	1511231406B	TAP 01-0408-031	607	314-40-9	Bromacil	ND	ug/L	0.0097	0.0049	89	
BLM-32-543	23-Nov-15	1511231406B	TAP 01-0408-031	607	4164-28-7	N-Nitrodimethylamine	ND	ug/L	0.0097	0.0049	71	
BLM-32-543	23-Nov-15	1511231406B	TAP 01-0408-031	607	62-75-9	N-Nitrosodimethylamine	ND	ug/L	0.0097	0.0049	39	
BLM-32-543	23-Nov-15	1511231440B	TAP 01-0403-015	NDMA_LL	4164-28-7	N-Nitrodimethylamine	5.8	ng/L	0.49	0.17		
BLM-32-543	23-Nov-15	1511231440B	TAP 01-0403-015	NDMA_LL	62-75-9	N-Nitrosodimethylamine	21	ng/L	0.49	0.36		
BLM-32-543	23-Nov-15	1511231705B	353.2	353.2	NA	Nitrate+Nitrite as Nitrogen	1.15	mg/L	0.050	0.003		
BLM-32-543	23-Nov-15	1511231532B	6850	6850	14797-73-0	Perchlorate	0.4	ug/L	0.20	0.026		
BLM-32-543	23-Nov-15	1511231514B	8270D	8270	95-94-3	1,2,4,5-Tetrachlorobenzene	ND	ug/L	9.4	1.9		
BLM-32-543	23-Nov-15	1511231514B	8270D	8270	120-82-1	1,2,4-Trichlorobenzene	ND	ug/L	9.4	1.0		
BLM-32-543	23-Nov-15	1511231514B	8270D	8270	95-50-1	1,2-Dichlorobenzene	ND	ug/L	9.4	1.0		
BLM-32-543	23-Nov-15	1511231514B	8270D	8270	122-66-7	1,2-Diphenylhydrazine	ND	ug/L	9.4	1.0		
BLM-32-543	23-Nov-15	1511231514B	8270D	8270	99-35-4	1,3,5-Trinitrobenzene	ND	ug/L	9.4	2.5		
BLM-32-543	23-Nov-15	1511231514B	8270D	8270	541-73-1	1,3-Dichlorobenzene	ND	ug/L	9.4	1.0		
BLM-32-543	23-Nov-15	1511231514B	8270D	8270	99-65-0	1,3-Dinitrobenzene	ND	ug/L	9.4	3.8		
BLM-32-543	23-Nov-15	1511231514B	8270D	8270	106-46-7	1,4-Dichlorobenzene	ND	ug/L	9.4	1.0		
BLM-32-543	23-Nov-15	1511231514B	8270D	8270	130-15-4	1,4-Naphthoquinone	ND	ug/L	47	2.9		
BLM-32-543	23-Nov-15	1511231514B	8270D	8270	106-50-3	1,4-Phenylenediamine	ND	ug/L	47	NA		*
BLM-32-543	23-Nov-15	1511231514B	8270D	8270	90-12-0	1-Methylnaphthalene	ND	ug/L	9.4	1.4		
BLM-32-543	23-Nov-15	1511231514B	8270D	8270	134-32-7	1-Naphthylamine	ND	ug/L	47	9.2		
BLM-32-543	23-Nov-15	1511231514B	8270D	8270	58-90-2	2,3,4,6-Tetrachlorophenol	ND	ug/L	9.4	2.0		
BLM-32-543	23-Nov-15	1511231514B	8270D	8270	95-95-4	2,4,5-Trichlorophenol	ND	ug/L	9.4	1.8		
BLM-32-543	23-Nov-15	1511231514B	8270D	8270	88-06-2	2,4,6-Trichlorophenol	ND	ug/L	9.4	1.4		
BLM-32-543	23-Nov-15	1511231514B	8270D	8270	120-83-2	2,4-Dichlorophenol	ND	ug/L	9.4	1.3		
BLM-32-543	23-Nov-15	1511231514B	8270D	8270	105-67-9	2,4-Dimethylphenol	ND	ug/L	9.4	1.5		
BLM-32-543	23-Nov-15	1511231514B	8270D	8270	51-28-5	2,4-Dinitrophenol	ND	ug/L	47	20		
BLM-32-543	23-Nov-15	1511231514B	8270D	8270	121-14-2	2,4-Dinitrotoluene	ND	ug/L	9.4	1.6		
BLM-32-543	23-Nov-15	1511231514B	8270D	8270	87-65-0	2,6-Dichlorophenol	ND	ug/L	9.4	1.0		
BLM-32-543	23-Nov-15	1511231514B	8270D	8270	606-20-2	2,6-Dinitrotoluene	ND	ug/L	9.4	1.8		
BLM-32-543	23-Nov-15	1511231514B	8270D	8270	53-96-3	2-Acetylaminofluorene	ND	ug/L	9.4	1.0		
BLM-32-543	23-Nov-15	1511231514B	8270D	8270	91-58-7	2-Chloronaphthalene	ND	ug/L	9.4	1.0		
BLM-32-543	23-Nov-15	1511231514B	8270D	8270	95-57-8	2-Chlorophenol	ND	ug/L	9.4	1.0		
BLM-32-543	23-Nov-15	1511231514B	8270D	8270	99-55-8	2-Methyl-5-nitroaniline (5-Nitro-o-toluidine)	ND	ug/L	9.4	1.8		
BLM-32-543	23-Nov-15	1511231514B	8270D	8270	91-57-6	2-Methylnaphthalene	ND	ug/L	9.4	1.0		
BLM-32-543	23-Nov-15	1511231514B	8270D	8270	95-48-7	2-Methylphenol	ND	ug/L	9.4	1.0		

wellname	event_date	sample_number	spec_method	analysis	casno	analyte	result	units	PQL	MDL	extract effiency	qa_flag
BLM-32-543	23-Nov-15	1511231514B	8270D	8270	91-59-8	2-Naphthylamine	ND	ug/L	47	5.1		
BLM-32-543	23-Nov-15	1511231514B	8270D	8270	88-74-4	2-Nitroaniline	ND	ug/L	47	9.1		
BLM-32-543	23-Nov-15	1511231514B	8270D	8270	88-75-5	2-Nitrophenol	ND	ug/L	9.4	1.4		
BLM-32-543	23-Nov-15	1511231514B	8270D	8270	109-06-8	2-Picoline	ND	ug/L	9.4	1.8		
BLM-32-543	23-Nov-15	1511231514B	8270D	8270	15831-10-4	3- and 4-Methylphenol Coelution	ND	ug/L	9.4	2.0		
BLM-32-543	23-Nov-15	1511231514B	8270D	8270	91-94-1	3,3'-Dichlorobenzidine	ND	ug/L	9.4	4.5		
BLM-32-543	23-Nov-15	1511231514B	8270D	8270	119-93-7	3,3'-Dimethylbenzidine	ND	ug/L	47	19		
BLM-32-543	23-Nov-15	1511231514B	8270D	8270	56-49-5	3-Methylcholanthrene	ND	ug/L	9.4	1.0		
BLM-32-543	23-Nov-15	1511231514B	8270D	8270	99-09-2	3-Nitroaniline	ND	ug/L	47	7.7		
BLM-32-543	23-Nov-15	1511231514B	8270D	8270	534-52-1	4,6-Dinitro-2-methylphenol	ND	ug/L	47	11		
BLM-32-543	23-Nov-15	1511231514B	8270D	8270	92-67-1	4-Aminobiphenyl	ND	ug/L	47	6.9		
BLM-32-543	23-Nov-15	1511231514B	8270D	8270	101-55-3	4-Bromophenyl Phenyl Ether	ND	ug/L	9.4	2.2		
BLM-32-543	23-Nov-15	1511231514B	8270D	8270	59-50-7	4-Chloro-3-methylphenol	ND	ug/L	9.4	1.2		
BLM-32-543	23-Nov-15	1511231514B	8270D	8270	7005-72-3	4-Chlorophenyl Phenyl Ether	ND	ug/L	9.4	1.2		
BLM-32-543	23-Nov-15	1511231514B	8270D	8270	100-01-6	4-Nitroaniline	ND	ug/L	47	7.8		
BLM-32-543	23-Nov-15	1511231514B	8270D	8270	100-02-7	4-Nitrophenol	ND	ug/L	47	5.9		
BLM-32-543	23-Nov-15	1511231514B	8270D	8270	56-57-5	4-Nitroquinoline N-Oxide	ND	ug/L	47	11		
BLM-32-543	23-Nov-15	1511231514B	8270D	8270	57-97-6	7,12-Dimethylbenz(a)anthracene	ND	ug/L	9.4	1.0		
BLM-32-543	23-Nov-15	1511231514B	8270D	8270	122-09-8	a,a-Dimethylphenethylamine	ND	ug/L	47	4.3		
BLM-32-543	23-Nov-15	1511231514B	8270D	8270	83-32-9	Acenaphthene	ND	ug/L	9.4	1.0		
BLM-32-543	23-Nov-15	1511231514B	8270D	8270	208-96-8	Acenaphthylene	ND	ug/L	9.4	1.0		
BLM-32-543	23-Nov-15	1511231514B	8270D	8270	208-96-8	Acenaphthylene	ND	ug/L	0.19	0.050		
BLM-32-543	23-Nov-15	1511231514B	8270D	8270	98-86-2	Acetophenone	ND	ug/L	9.4	1.6		
BLM-32-543	23-Nov-15	1511231514B	8270D	8270	62-53-3	Aniline	ND	ug/L	9.4	2.0		
BLM-32-543	23-Nov-15	1511231514B	8270D	8270	120-12-7	Anthracene	ND	ug/L	9.4	1.0		
BLM-32-543	23-Nov-15	1511231514B	8270D	8270	140-57-8	Aramite, Total	ND	ug/L	47	9.5		
BLM-32-543	23-Nov-15	1511231514B	8270D	8270	56-55-3	Benz(a)anthracene	ND	ug/L	0.19	0.050		
BLM-32-543	23-Nov-15	1511231514B	8270D	8270	92-87-5	Benzidine	ND	ug/L	94	90		
BLM-32-543	23-Nov-15	1511231514B	8270D	8270	50-32-8	Benzo(a)pyrene	ND	ug/L	0.19	0.050		
BLM-32-543	23-Nov-15	1511231514B	8270D	8270	205-99-2	Benzo(b)fluoranthene	ND	ug/L	0.19	0.050		
BLM-32-543	23-Nov-15	1511231514B	8270D	8270	191-24-2	Benzo(g,h,i)perylene	ND	ug/L	9.4	1.0		
BLM-32-543	23-Nov-15	1511231514B	8270D	8270	207-08-9	Benzo(k)fluoranthene	ND	ug/L	0.19	0.050		
BLM-32-543	23-Nov-15	1511231514B	8270D	8270	100-51-6	Benzyl Alcohol	ND	ug/L	9.4	1.3		
BLM-32-543	23-Nov-15	1511231514B	8270D	8270	108-60-1	Bis(1-chloroisopropyl) Ether	ND	ug/L	9.4	1.0		

wellname	event_date	sample_number	spec_method	analysis	casno	analyte	result	units	PQL	MDL	extract effiency	qa_flag
BLM-32-543	23-Nov-15	1511231514B	8270D	8270	111-91-1	Bis(2-chloroethoxy)methane	ND	ug/L	9.4	2.2		
BLM-32-543	23-Nov-15	1511231514B	8270D	8270	111-44-4	Bis(2-chloroethyl) Ether	ND	ug/L	9.4	1.3		
BLM-32-543	23-Nov-15	1511231514B	8270D	8270	117-81-7	Bis(2-ethylhexyl) Phthalate	ND	ug/L	4.7	0.57		
BLM-32-543	23-Nov-15	1511231514B	8270D	8270	85-68-7	Butyl Benzyl Phthalate	ND	ug/L	9.4	2.4		
BLM-32-543	23-Nov-15	1511231514B	8270D	8270	510-15-6	Chlorobenzilate	ND	ug/L	9.4	1.0		
BLM-32-543	23-Nov-15	1511231514B	8270D	8270	218-01-9	Chrysene	ND	ug/L	0.19	0.050		
BLM-32-543	23-Nov-15	1511231514B	8270D	8270	2303-16-4	Diallate	ND	ug/L	9.4	1.3		
BLM-32-543	23-Nov-15	1511231514B	8270D	8270	53-70-3	Dibenz(a,h)anthracene	ND	ug/L	0.19	0.050		
BLM-32-543	23-Nov-15	1511231514B	8270D	8270	132-64-9	Dibenzofuran	ND	ug/L	9.4	1.0		
BLM-32-543	23-Nov-15	1511231514B	8270D	8270	84-66-2	Diethyl Phthalate	ND	ug/L	9.4	1.0		
BLM-32-543	23-Nov-15	1511231514B	8270D	8270	60-51-5	Dimethoate	ND	ug/L	47	8.7		
BLM-32-543	23-Nov-15	1511231514B	8270D	8270	131-11-3	Dimethyl Phthalate	ND	ug/L	9.4	1.0		
BLM-32-543	23-Nov-15	1511231514B	8270D	8270	84-74-2	Di-n-butyl Phthalate	ND	ug/L	9.4	1.0		
BLM-32-543	23-Nov-15	1511231514B	8270D	8270	117-84-0	Di-n-octyl Phthalate	ND	ug/L	9.4	1.2		
BLM-32-543	23-Nov-15	1511231514B	8270D	8270	000127-63-9	Diphenyl sulfone	4	ug/L	NA	NA		TIC
BLM-32-543	23-Nov-15	1511231514B	8270D	8270	122-39-4	Diphenylamine	ND	ug/L	9.4	NA		*
BLM-32-543	23-Nov-15	1511231514B	8270D	8270	298-04-4	Disulfoton	ND	ug/L	9.4	1.2		
BLM-32-543	23-Nov-15	1511231514B	8270D	8270	62-50-0	Ethyl Methanesulfonate	ND	ug/L	9.4	1.0		
BLM-32-543	23-Nov-15	1511231514B	8270D	8270	206-44-0	Fluoranthene	ND	ug/L	9.4	1.0		
BLM-32-543	23-Nov-15	1511231514B	8270D	8270	86-73-7	Fluorene	ND	ug/L	9.4	1.0		
BLM-32-543	23-Nov-15	1511231514B	8270D	8270	000068-12-2	Formamide, N,N-dimethyl-	14	ug/L	NA	NA		TIC
BLM-32-543	23-Nov-15	1511231514B	8270D	8270	118-74-1	Hexachlorobenzene	ND	ug/L	0.19	0.050		
BLM-32-543	23-Nov-15	1511231514B	8270D	8270	87-68-3	Hexachlorobutadiene	ND	ug/L	9.4	1.3		
BLM-32-543	23-Nov-15	1511231514B	8270D	8270	77-47-4	Hexachlorocyclopentadiene	ND	ug/L	9.4	1.0		
BLM-32-543	23-Nov-15	1511231514B	8270D	8270	67-72-1	Hexachloroethane	ND	ug/L	9.4	1.2		
BLM-32-543	23-Nov-15	1511231514B	8270D	8270	70-30-4	Hexachlorophene	ND	ug/L	470	55		
BLM-32-543	23-Nov-15	1511231514B	8270D	8270	1888-71-7	Hexachloropropene	ND	ug/L	9.4	1.0		
BLM-32-543	23-Nov-15	1511231514B	8270D	8270	193-39-5	Indeno(1,2,3-cd)pyrene	ND	ug/L	0.19	0.050		
BLM-32-543	23-Nov-15	1511231514B	8270D	8270	465-73-6	Isodrin	ND	ug/L	9.4	1.8		
BLM-32-543	23-Nov-15	1511231514B	8270D	8270	78-59-1	Isophorone	ND	ug/L	9.4	1.0		
BLM-32-543	23-Nov-15	1511231514B	8270D	8270	120-58-1	Isosafrole	ND	ug/L	9.4	3.8		
BLM-32-543	23-Nov-15	1511231514B	8270D	8270	91-80-5	Methapyrilene	ND	ug/L	47	26		
BLM-32-543	23-Nov-15	1511231514B	8270D	8270	66-27-3	Methyl Methanesulfonate	ND	ug/L	9.4	1.0		
BLM-32-543	23-Nov-15	1511231514B	8270D	8270	298-00-0	Methyl Parathion	ND	ug/L	9.4	1.3		
BLM-32-543	23-Nov-15	1511231514B	8270D	8270	002216-15-1	N,N-Diethyl-p-nitroaniline	5.3	ug/L	NA	NA		TIC
BLM-32-543	23-Nov-15	1511231514B	8270D	8270	91-20-3	Naphthalene	ND	ug/L	9.4	1.0		
BLM-32-543	23-Nov-15	1511231514B	8270D	8270	98-95-3	Nitrobenzene	ND	ug/L	9.4	1.6		
BLM-32-543	23-Nov-15	1511231514B	8270D	8270	55-18-5	N-Nitrosodiethylamine	ND	ug/L	9.4	1.0		
BLM-32-543	23-Nov-15	1511231514B	8270D	8270	62-75-9	N-Nitrosodimethylamine	ND	ug/L	9.4	1.0		

wellname	event_date	sample_number	spec_method	analysis	casno	analyte	result	units	PQL	MDL	extract effiency	qa_flag
BLM-32-543	23-Nov-15	1511231514B	8270D	8270	86-30-6	N-Nitrosodiphenylamine	ND	ug/L	9.4	1.0		
BLM-32-543	23-Nov-15	1511231514B	8270D	8270	10595-95-6	N-Nitrosomethylethylamine	ND	ug/L	9.4	1.8		
BLM-32-543	23-Nov-15	1511231514B	8270D	8270	59-89-2	N-Nitrosomorpholine	ND	ug/L	9.4	1.2		
BLM-32-543	23-Nov-15	1511231514B	8270D	8270	621-64-7	N-Nitroso-N-Dipropylamine	ND	ug/L	9.4	1.3		
BLM-32-543	23-Nov-15	1511231514B	8270D	8270	100-75-4	N-Nitrosopiperidine	ND	ug/L	9.4	1.1		
BLM-32-543	23-Nov-15	1511231514B	8270D	8270	930-55-2	N-Nitrosopyrrolidine	ND	ug/L	9.4	1.0		
BLM-32-543	23-Nov-15	1511231514B	8270D	8270	126-68-1	O,O,O-Triethyl Phosphorothioate	ND	ug/L	9.4	2.0		
BLM-32-543	23-Nov-15	1511231514B	8270D	8270	95-53-4	o-Toluidine	ND	ug/L	9.4	2.1		
BLM-32-543	23-Nov-15	1511231514B	8270D	8270	56-38-2	Parathion	ND	ug/L	9.4	1.7		
BLM-32-543	23-Nov-15	1511231514B	8270D	8270	106-47-8	p-Chloroaniline	ND	ug/L	9.4	1.5		
BLM-32-543	23-Nov-15	1511231514B	8270D	8270	60-11-7	p-Dimethylaminoazobenzene	ND	ug/L	9.4	1.0		
BLM-32-543	23-Nov-15	1511231514B	8270D	8270	608-93-5	Pentachlorobenzene	ND	ug/L	9.4	1.0		
BLM-32-543	23-Nov-15	1511231514B	8270D	8270	76-01-7	Pentachloroethane	ND	ug/L	9.4	1.7		
BLM-32-543	23-Nov-15	1511231514B	8270D	8270	82-68-8	Pentachloronitrobenzene (PCNB)	ND	ug/L	9.4	1.5		
BLM-32-543	23-Nov-15	1511231514B	8270D	8270	62-44-2	Phenacetin	ND	ug/L	9.4	1.8		
BLM-32-543	23-Nov-15	1511231514B	8270D	8270	85-01-8	Phenanthrene	ND	ug/L	9.4	1.0		
BLM-32-543	23-Nov-15	1511231514B	8270D	8270	108-95-2	Phenol	ND	ug/L	9.4	1.0		
BLM-32-543	23-Nov-15	1511231514B	8270D	8270	298-02-2	Phorate	ND	ug/L	9.4	1.0		
BLM-32-543	23-Nov-15	1511231514B	8270D	8270	23950-58-5	Pronamide	ND	ug/L	9.4	1.3		
BLM-32-543	23-Nov-15	1511231514B	8270D	8270	129-00-0	Pyrene	ND	ug/L	9.4	1.0		
BLM-32-543	23-Nov-15	1511231514B	8270D	8270	110-86-1	Pyridine	ND	ug/L	47	16		
BLM-32-543	23-Nov-15	1511231514B	8270D	8270	94-59-7	Safrole	ND	ug/L	9.4	1.1		
BLM-32-543	23-Nov-15	1511231514B	8270D	8270	3689-24-5	Sulfotep	ND	ug/L	9.4	2.0		
BLM-32-543	23-Nov-15	1511231514B	8270D	8270	297-97-2	Thionazin	ND	ug/L	9.4	1.8		
BLM-32-543	23-Nov-15	1511231514B	8270D	8270	TIC	unknown	78	ug/L	NA	NA		TIC
BLM-32-543	23-Nov-15	1511231514B	8270D	8270	TIC	unknown	81	ug/L	NA	NA		TIC
BLM-32-543	23-Nov-15	1511231514B	8270D	8270	TIC	unknown	24	ug/L	NA	NA		TIC
BLM-32-543	23-Nov-15	1511231514B	8270D	8270	TIC	unknown	12	ug/L	NA	NA		TIC
BLM-32-543	23-Nov-15	1511231514B	8270D	8270	TIC	unknown	44	ug/L	NA	NA		TIC
BLM-32-543	23-Nov-15	1511231529B	SM 2540 C-1997(20	SM2540C	NA	Total Dissolved Solids (TDS)	652	mg/L	10	4		
BLM-32-543	23-Nov-15	1511231404B	8260C	8260_LL	630-20-6	1,1,1,2-Tetrachloroethane	ND	ug/L	0.50	0.20		
BLM-32-543	23-Nov-15	1511231404B	8260C	8260_LL	71-55-6	1,1,1-Trichloroethane (TCA)	ND	ug/L	0.50	0.36		
BLM-32-543	23-Nov-15	1511231404B	8260C	8260_LL	79-34-5	1,1,2,2-Tetrachloroethane	ND	ug/L	0.50	0.20		

wellname	event_date	sample_number	spec_method	analysis	casno	analyte	result	units	PQL	MDL	extract effiency	qa_flag
BLM-32-543	23-Nov-15	1511231404B	8260C	8260_LL	76-13-1	1,1,2-Trichloro-1,2,2-Trifluoroethane	ND	ug/L	0.50	0.31		
BLM-32-543	23-Nov-15	1511231404B	8260C	8260_LL	79-00-5	1,1,2-Trichloroethane	ND	ug/L	0.50	0.23		
BLM-32-543	23-Nov-15	1511231404B	8260C	8260_LL	75-34-3	1,1-Dichloroethane (1,1-DCA)	ND	ug/L	0.50	0.20		
BLM-32-543	23-Nov-15	1511231404B	8260C	8260_LL	75-35-4	1,1-Dichloroethene	ND	ug/L	0.50	0.28		
BLM-32-543	23-Nov-15	1511231404B	8260C	8260_LL	96-18-4	1,2,3-Trichloropropane	ND	ug/L	0.50	0.32		
BLM-32-543	23-Nov-15	1511231404B	8260C	8260_LL	96-12-8	1,2-Dibromo-3-chloropropane (DBCP)	ND	ug/L	1.0	0.74		
BLM-32-543	23-Nov-15	1511231404B	8260C	8260_LL	106-93-4	1,2-Dibromoethane	ND	ug/L	0.50	0.24		
BLM-32-543	23-Nov-15	1511231404B	8260C	8260_LL	354-23-4	1,2-Dichloro-1,1,2-trifluoroethane (CFC 123a)	ND	ug/L	0.50	0.20		
BLM-32-543	23-Nov-15	1511231404B	8260C	8260_LL	107-06-2	1,2-Dichloroethane	ND	ug/L	0.50	0.20		
BLM-32-543	23-Nov-15	1511231404B	8260C	8260_LL	78-87-5	1,2-Dichloropropane	ND	ug/L	0.50	0.20		
BLM-32-543	23-Nov-15	1511231404B	8260C	8260_LL	123-91-1	1,4-Dioxane	ND	ug/L	40	18		
BLM-32-543	23-Nov-15	1511231404B	8260C	8260_LL	306-83-2	2,2-Dichloro-1,1,1-trifluoroethane (CFC 123)	ND	ug/L	0.50	0.32		
BLM-32-543	23-Nov-15	1511231404B	8260C	8260_LL	78-93-3	2-Butanone (MEK)	ND	ug/L	5.0	0.81		
BLM-32-543	23-Nov-15	1511231404B	8260C	8260_LL	126-99-8	2-Chloro-1,3-butadiene	ND	ug/L	0.50	0.22		
BLM-32-543	23-Nov-15	1511231404B	8260C	8260_LL	591-78-6	2-Hexanone	ND	ug/L	5.0	0.73		
BLM-32-543	23-Nov-15	1511231404B	8260C	8260_LL	78-83-1	2-Methyl-1-propanol (Isobutyl Alcohol)	ND	ug/L	100	8.1		
BLM-32-543	23-Nov-15	1511231404B	8260C	8260_LL	67-63-0	2-Propanol	ND	ug/L	40	8.6		
BLM-32-543	23-Nov-15	1511231404B	8260C	8260_LL	107-05-1	3-Chloro-1-propene (Allyl Chloride)	ND	ug/L	0.50	0.25		
BLM-32-543	23-Nov-15	1511231404B	8260C	8260_LL	108-10-1	4-Methyl-2-pentanone	0.29	ug/L	2.0	0.20		J
BLM-32-543	23-Nov-15	1511231404B	8260C	8260_LL	67-64-1	Acetone	2.9	ug/L	5.0	1.3		J FB
BLM-32-543	23-Nov-15	1511231404B	8260C	8260_LL	75-05-8	Acetonitrile	ND	ug/L	25	3.7		
BLM-32-543	23-Nov-15	1511231404B	8260C	8260_LL	107-02-8	Acrolein	ND	ug/L	5.0	3.0		
BLM-32-543	23-Nov-15	1511231404B	8260C	8260_LL	107-13-1	Acrylonitrile	ND	ug/L	2.5	0.78		
BLM-32-543	23-Nov-15	1511231404B	8260C	8260_LL	71-43-2	Benzene	0.23	ug/L	0.50	0.20		J
BLM-32-543	23-Nov-15	1511231404B	8260C	8260_LL	75-27-4	Bromodichloromethane	ND	ug/L	0.50	0.32		
BLM-32-543	23-Nov-15	1511231404B	8260C	8260_LL	75-25-2	Bromoform	ND	ug/L	1.0	0.21		
BLM-32-543	23-Nov-15	1511231404B	8260C	8260_LL	74-83-9	Bromomethane	ND	ug/L	0.50	0.24		
BLM-32-543	23-Nov-15	1511231404B	8260C	8260_LL	75-15-0	Carbon Disulfide	ND	ug/L	0.50	0.20		
BLM-32-543	23-Nov-15	1511231404B	8260C	8260_LL	56-23-5	Carbon Tetrachloride	ND	ug/L	0.50	0.45		
BLM-32-543	23-Nov-15	1511231404B	8260C	8260_LL	108-90-7	Chlorobenzene	ND	ug/L	0.50	0.20		
BLM-32-543	23-Nov-15	1511231404B	8260C	8260_LL	75-00-3	Chloroethane	ND	ug/L	0.50	0.22		
BLM-32-543	23-Nov-15	1511231404B	8260C	8260_LL	67-66-3	Chloroform	ND	ug/L	0.50	0.20		
BLM-32-543	23-Nov-15	1511231404B	8260C	8260_LL	74-87-3	Chloromethane	ND	ug/L	0.50	0.20		
BLM-32-543	23-Nov-15	1511231404B	8260C	8260_LL	156-59-2	cis-1,2-Dichloroethene	ND	ug/L	0.50	0.20		
BLM-32-543	23-Nov-15	1511231404B	8260C	8260_LL	10061-01-5	cis-1,3-Dichloropropene	ND	ug/L	0.50	0.20		

wellname	event_date	sample_number	spec_method	analysis	casno	analyte	result	units	PQL	MDL	extract effiency	qa_flag
BLM-32-543	23-Nov-15	1511231404B	8260C	8260_LL	110-82-7	Cyclohexane	ND	ug/L	1.0	0.25		
BLM-32-543	23-Nov-15	1511231404B	8260C	8260_LL	124-48-1	Dibromochloromethane	ND	ug/L	0.50	0.20		
BLM-32-543	23-Nov-15	1511231404B	8260C	8260_LL	74-95-3	Dibromomethane	ND	ug/L	0.50	0.22		
BLM-32-543	23-Nov-15	1511231404B	8260C	8260_LL	75-71-8	Dichlorodifluoromethane (CFC 12)	ND	ug/L	0.50	0.21		
BLM-32-543	23-Nov-15	1511231404B	8260C	8260_LL	75-43-4	Dichlorofluoromethane (CFC 21)	ND	ug/L	0.50	0.20		
BLM-32-543	23-Nov-15	1511231404B	8260C	8260_LL	75-09-2	Dichloromethane	ND	ug/L	0.50	0.20		
BLM-32-543	23-Nov-15	1511231404B	8260C	8260_LL	97-63-2	Ethyl Methacrylate	ND	ug/L	0.50	0.20		
BLM-32-543	23-Nov-15	1511231404B	8260C	8260_LL	100-41-4	Ethylbenzene	ND	ug/L	0.50	0.20		
BLM-32-543	23-Nov-15	1511231404B	8260C	8260_LL	74-88-4	Iodomethane	ND	ug/L	5.0	0.27		
BLM-32-543	23-Nov-15	1511231404B	8260C	8260_LL	179601-23-1	m,p-Xylenes	ND	ug/L	1.0	0.26		
BLM-32-543	23-Nov-15	1511231404B	8260C	8260_LL	126-98-7	Methacrylonitrile	ND	ug/L	1.0	0.50		
BLM-32-543	23-Nov-15	1511231404B	8260C	8260_LL	80-62-6	Methyl Methacrylate	ND	ug/L	0.50	0.39		
BLM-32-543	23-Nov-15	1511231404B	8260C	8260_LL	1634-04-4	Methyl tert-Butyl Ether	ND	ug/L	0.50	0.20		
BLM-32-543	23-Nov-15	1511231404B	8260C	8260_LL	108-87-2	Methylcyclohexane	ND	ug/L	1.0	0.27		
BLM-32-543	23-Nov-15	1511231404B	8260C	8260_LL	95-47-6	o-Xylene	ND	ug/L	0.50	0.20		
BLM-32-543	23-Nov-15	1511231404B	8260C	8260_LL	107-12-0	Propionitrile	ND	ug/L	2.5	1.7		
BLM-32-543	23-Nov-15	1511231404B	8260C	8260_LL	100-42-5	Styrene	ND	ug/L	0.50	0.20		
BLM-32-543	23-Nov-15	1511231404B	8260C	8260_LL	127-18-4	Tetrachloroethene (PCE)	ND	ug/L	0.50	0.20		
BLM-32-543	23-Nov-15	1511231404B	8260C	8260_LL	109-99-9	Tetrahydrofuran (THF)	ND	ug/L	5.0	0.66		
BLM-32-543	23-Nov-15	1511231404B	8260C	8260_LL	108-88-3	Toluene	2.9	ug/L	0.50	0.20		
BLM-32-543	23-Nov-15	1511231404B	8260C	8260_LL	156-60-5	trans-1,2-Dichloroethene	ND	ug/L	0.50	0.20		
BLM-32-543	23-Nov-15	1511231404B	8260C	8260_LL	10061-02-6	trans-1,3-Dichloropropene	ND	ug/L	0.50	0.20		
BLM-32-543	23-Nov-15	1511231404B	8260C	8260_LL	110-57-6	trans-1,4-Dichloro-2-butene	ND	ug/L	0.52	0.52		
BLM-32-543	23-Nov-15	1511231404B	8260C	8260_LL	79-01-6	Trichloroethene (TCE)	ND	ug/L	0.50	0.20		
BLM-32-543	23-Nov-15	1511231404B	8260C	8260_LL	75-69-4	Trichlorofluoromethane (CFC 11)	ND	ug/L	0.50	0.20		
BLM-32-543	23-Nov-15	1511231404B	8260C	8260_LL	108-05-4	Vinyl Acetate	ND	ug/L	1.0	0.78		
BLM-32-543	23-Nov-15	1511231404B	8260C	8260_LL	75-01-4	Vinyl Chloride	ND	ug/L	0.50	0.22		
BLM-32-571	23-Nov-15	1511231645B	SM 2320 B-1997(20	ANIONS	NA	Alkalinity, Total as CaCO3	192	mg/L	2.0	0.3		
BLM-32-571	23-Nov-15	1511231645B	300.0	ANIONS	16887-00-6	Chloride	49.6	mg/L	2.0	1.0		
BLM-32-571	23-Nov-15	1511231645B	300.0	ANIONS	16984-48-8	Fluoride, undistilled	0.81	mg/L	0.10	0.008		
BLM-32-571	23-Nov-15	1511231645B	300.0	ANIONS	14808-79-8	Sulfate	311	mg/L	8.0	0.8		
BLM-32-571	23-Nov-15	1511231724B	PARAMS	PARAMS	NA	Conductivity	1010	µS/cm	NA	NA		
BLM-32-571	23-Nov-15	1511231724B	PARAMS	PARAMS	NA	pH	7.87	NA	NA	NA		
BLM-32-571	23-Nov-15	1511231724B	PARAMS	PARAMS	NA	Temperature	17.9	ºC	NA	NA		
BLM-32-571	23-Nov-15	1511231724B	PARAMS	PARAMS	NA	Transducer	NA	ft	NA	NA		
BLM-32-571	23-Nov-15	1511231724B	PARAMS	PARAMS	NA	Turbidity	1.10	NTU	NA	NA		
BLM-32-571	23-Nov-15	1511231414B	PARAMS	PARAMS	NA	Conductivity	968	µS/cm	NA	NA		

wellname	event_date	sample_number	spec_method	analysis	casno	analyte	result	units	PQL	MDL	extract effiency	qa_flag
BLM-32-571	23-Nov-15	1511231414B	PARAMS	PARAMS	NA	pH	7.63	NA	NA	NA		
BLM-32-571	23-Nov-15	1511231414B	PARAMS	PARAMS	NA	Temperature	20.0	ºC	NA	NA		
BLM-32-571	23-Nov-15	1511231414B	PARAMS	PARAMS	NA	Transducer	NA	ft	NA	NA		
BLM-32-571	23-Nov-15	1511231414B	PARAMS	PARAMS	NA	Turbidity	0.89	NTU	NA	NA		
BLM-32-571	23-Nov-15	1511231639B	6010C	METALS	7429-90-5	Aluminum, Total	ND	mg/L	0.10	0.009		
BLM-32-571	23-Nov-15	1511231639B	6020A	METALS	7440-36-0	Antimony, Total	0.0005	mg/L	0.0010	0.0004		J
BLM-32-571	23-Nov-15	1511231639B	6020A	METALS	7440-38-2	Arsenic, Total	ND	mg/L	0.0010	0.0004		
BLM-32-571	23-Nov-15	1511231639B	6010C	METALS	7440-39-3	Barium, Total	0.043	mg/L	0.020	0.0008		
BLM-32-571	23-Nov-15	1511231639B	6010C	METALS	7440-41-7	Beryllium, Total	ND	mg/L	0.0030	0.0002		
BLM-32-571	23-Nov-15	1511231639B	6010C	METALS	7440-42-8	Boron, Total	0.11	mg/L	0.20	0.03		J RB
BLM-32-571	23-Nov-15	1511231639B	6010C	METALS	7440-43-9	Cadmium, Total	ND	mg/L	0.0050	0.0002		
BLM-32-571	23-Nov-15	1511231639B	6010C	METALS	7440-70-2	Calcium, Total	79.8	mg/L	5.0	0.3		
BLM-32-571	23-Nov-15	1511231639B	6010C	METALS	7440-47-3	Chromium, Total	ND	mg/L	0.010	0.0004		
BLM-32-571	23-Nov-15	1511231639B	6010C	METALS	7440-48-4	Cobalt, Total	ND	mg/L	0.050	0.0009		
BLM-32-571	23-Nov-15	1511231639B	6010C	METALS	7440-50-8	Copper, Total	ND	mg/L	0.020	0.003		
BLM-32-571	23-Nov-15	1511231639B	6010C	METALS	7439-89-6	Iron, Total	0.08	mg/L	0.10	0.010		J
BLM-32-571	23-Nov-15	1511231639B	6010C	METALS	7439-92-1	Lead, Total	0.01	mg/L	0.050	0.005		J
BLM-32-571	23-Nov-15	1511231639B	6010C	METALS	7439-95-4	Magnesium, Total	55.4	mg/L	1.0	0.010		
BLM-32-571	23-Nov-15	1511231639B	6010C	METALS	7439-96-5	Manganese, Total	0.544	mg/L	0.010	0.002		
BLM-32-571	23-Nov-15	1511231639B	7470A	METALS	7439-97-6	Mercury, Total	0.00007	mg/L	0.00020	0.00004		J
BLM-32-571	23-Nov-15	1511231639B	6010C	METALS	7439-98-7	Molybdenum, Total	0.007	mg/L	0.025	0.0007		J RB
BLM-32-571	23-Nov-15	1511231639B	6010C	METALS	7440-02-0	Nickel, Total	0.002	mg/L	0.040	0.002		J
BLM-32-571	23-Nov-15	1511231639B	6010C	METALS	7440-09-7	Potassium, Total	3	mg/L	2.0	0.05		
BLM-32-571	23-Nov-15	1511231639B	6010C	METALS	7782-49-2	Selenium, Total	ND	mg/L	0.010	0.005		
BLM-32-571	23-Nov-15	1511231639B	6010C	METALS	7440-22-4	Silver, Total	0.001	mg/L	0.010	0.0006		J
BLM-32-571	23-Nov-15	1511231639B	6010C	METALS	7440-23-5	Sodium, Total	36.2	mg/L	1.0	0.09		
BLM-32-571	23-Nov-15	1511231639B	6010C	METALS	7440-24-6	Strontium, Total	2.02	mg/L	0.10	0.0005		
BLM-32-571	23-Nov-15	1511231639B	6020A	METALS	7440-28-0	Thallium, Total	0.0001	mg/L	0.0010	0.00003		J
BLM-32-571	23-Nov-15	1511231639B	6010C	METALS	7440-31-5	Tin, Total	ND	mg/L	0.50	0.02		
BLM-32-571	23-Nov-15	1511231639B	6010C	METALS	7440-62-2	Vanadium, Total	0.002	mg/L	0.050	0.0010		J
BLM-32-571	23-Nov-15	1511231639B	6010C	METALS	7440-66-6	Zinc, Total	0.056	mg/L	0.020	0.007		
BLM-32-571	23-Nov-15	1511231418B	TAP 01-0408-031	607	314-40-9	Bromacil	ND	ug/L	0.0097	0.0049	89	
BLM-32-571	23-Nov-15	1511231418B	TAP 01-0408-031	607	4164-28-7	N-Nitrodimethylamine	ND	ug/L	0.0097	0.0049	71	
BLM-32-571	23-Nov-15	1511231418B	TAP 01-0408-031	607	62-75-9	N-Nitrosodimethylamine	ND	ug/L	0.0097	0.0049	39	
BLM-32-571	23-Nov-15	1511231451B	TAP 01-0403-015	NDMA_LL	4164-28-7	N-Nitrodimethylamine	2.8	ng/L	0.49	0.17		
BLM-32-571	23-Nov-15	1511231451B	TAP 01-0403-015	NDMA_LL	62-75-9	N-Nitrosodimethylamine	9	ng/L	0.49	0.36		
BLM-32-571	23-Nov-15	1511231721B	353.2	353.2	NA	Nitrate+Nitrite as Nitrogen	1.11	mg/L	0.050	0.003		

wellname	event_date	sample_number	spec_method	analysis	casno	analyte	result	units	PQL	MDL	extract effiency	qa_flag
BLM-32-571	23-Nov-15	1511231719B	6850	6850	14797-73-0	Perchlorate	0.39	ug/L	0.20	0.026		
BLM-32-571	23-Nov-15	1511231524B	8270D	8270	95-94-3	1,2,4,5-Tetrachlorobenzene	ND	ug/L	9.4	1.9		
BLM-32-571	23-Nov-15	1511231524B	8270D	8270	120-82-1	1,2,4-Trichlorobenzene	ND	ug/L	9.4	1.0		
BLM-32-571	23-Nov-15	1511231524B	8270D	8270	95-50-1	1,2-Dichlorobenzene	ND	ug/L	9.4	1.0		
BLM-32-571	23-Nov-15	1511231524B	8270D	8270	122-66-7	1,2-Diphenylhydrazine	ND	ug/L	9.4	1.0		
BLM-32-571	23-Nov-15	1511231524B	8270D	8270	99-35-4	1,3,5-Trinitrobenzene	ND	ug/L	9.4	2.5		
BLM-32-571	23-Nov-15	1511231524B	8270D	8270	541-73-1	1,3-Dichlorobenzene	ND	ug/L	9.4	1.0		
BLM-32-571	23-Nov-15	1511231524B	8270D	8270	99-65-0	1,3-Dinitrobenzene	ND	ug/L	9.4	3.8		
BLM-32-571	23-Nov-15	1511231524B	8270D	8270	106-46-7	1,4-Dichlorobenzene	ND	ug/L	9.4	1.0		
BLM-32-571	23-Nov-15	1511231524B	8270D	8270	015176-21-3	1,4-Dioxane, 2,5-dimethyl-	6	ug/L	NA	NA		TIC
BLM-32-571	23-Nov-15	1511231524B	8270D	8270	130-15-4	1,4-Naphthoquinone	ND	ug/L	47	2.9		
BLM-32-571	23-Nov-15	1511231524B	8270D	8270	106-50-3	1,4-Phenylenediamine	ND	ug/L	47	NA		*
BLM-32-571	23-Nov-15	1511231524B	8270D	8270	90-12-0	1-Methylnaphthalene	ND	ug/L	9.4	1.4		
BLM-32-571	23-Nov-15	1511231524B	8270D	8270	134-32-7	1-Naphthylamine	ND	ug/L	47	9.2		
BLM-32-571	23-Nov-15	1511231524B	8270D	8270	58-90-2	2,3,4,6-Tetrachlorophenol	ND	ug/L	9.4	2.0		
BLM-32-571	23-Nov-15	1511231524B	8270D	8270	95-95-4	2,4,5-Trichlorophenol	ND	ug/L	9.4	1.8		
BLM-32-571	23-Nov-15	1511231524B	8270D	8270	88-06-2	2,4,6-Trichlorophenol	ND	ug/L	9.4	1.4		
BLM-32-571	23-Nov-15	1511231524B	8270D	8270	120-83-2	2,4-Dichlorophenol	ND	ug/L	9.4	1.3		
BLM-32-571	23-Nov-15	1511231524B	8270D	8270	105-67-9	2,4-Dimethylphenol	ND	ug/L	9.4	1.5		
BLM-32-571	23-Nov-15	1511231524B	8270D	8270	51-28-5	2,4-Dinitrophenol	ND	ug/L	47	20		
BLM-32-571	23-Nov-15	1511231524B	8270D	8270	121-14-2	2,4-Dinitrotoluene	ND	ug/L	9.4	1.6		
BLM-32-571	23-Nov-15	1511231524B	8270D	8270	87-65-0	2,6-Dichlorophenol	ND	ug/L	9.4	1.0		
BLM-32-571	23-Nov-15	1511231524B	8270D	8270	606-20-2	2,6-Dinitrotoluene	ND	ug/L	9.4	1.8		
BLM-32-571	23-Nov-15	1511231524B	8270D	8270	53-96-3	2-Acetylaminofluorene	ND	ug/L	9.4	1.0		
BLM-32-571	23-Nov-15	1511231524B	8270D	8270	91-58-7	2-Chloronaphthalene	ND	ug/L	9.4	1.0		
BLM-32-571	23-Nov-15	1511231524B	8270D	8270	95-57-8	2-Chlorophenol	ND	ug/L	9.4	1.0		
BLM-32-571	23-Nov-15	1511231524B	8270D	8270	99-55-8	2-Methyl-5-nitroaniline (5-Nitro-o-toluidine)	ND	ug/L	9.4	1.8		
BLM-32-571	23-Nov-15	1511231524B	8270D	8270	91-57-6	2-Methylnaphthalene	ND	ug/L	9.4	1.0		
BLM-32-571	23-Nov-15	1511231524B	8270D	8270	95-48-7	2-Methylphenol	ND	ug/L	9.4	1.0		
BLM-32-571	23-Nov-15	1511231524B	8270D	8270	91-59-8	2-Naphthylamine	ND	ug/L	47	5.1		
BLM-32-571	23-Nov-15	1511231524B	8270D	8270	88-74-4	2-Nitroaniline	ND	ug/L	47	9.1		
BLM-32-571	23-Nov-15	1511231524B	8270D	8270	88-75-5	2-Nitrophenol	ND	ug/L	9.4	1.4		
BLM-32-571	23-Nov-15	1511231524B	8270D	8270	109-06-8	2-Picoline	ND	ug/L	9.4	1.8		
BLM-32-571	23-Nov-15	1511231524B	8270D	8270	15831-10-4	3- and 4-Methylphenol Coelution	ND	ug/L	9.4	2.0		
BLM-32-571	23-Nov-15	1511231524B	8270D	8270	91-94-1	3,3'-Dichlorobenzidine	ND	ug/L	9.4	4.5		
BLM-32-571	23-Nov-15	1511231524B	8270D	8270	119-93-7	3,3'-Dimethylbenzidine	ND	ug/L	47	19		
BLM-32-571	23-Nov-15	1511231524B	8270D	8270	56-49-5	3-Methylcholanthrene	ND	ug/L	9.4	1.0		
BLM-32-571	23-Nov-15	1511231524B	8270D	8270	99-09-2	3-Nitroaniline	ND	ug/L	47	7.7		

wellname	event_date	sample_number	spec_method	analysis	casno	analyte	result	units	PQL	MDL	extract effiency	qa_flag
BLM-32-571	23-Nov-15	1511231524B	8270D	8270	534-52-1	4,6-Dinitro-2-methylphenol	ND	ug/L	47	11		
BLM-32-571	23-Nov-15	1511231524B	8270D	8270	92-67-1	4-Aminobiphenyl	ND	ug/L	47	6.9		
BLM-32-571	23-Nov-15	1511231524B	8270D	8270	101-55-3	4-Bromophenyl Phenyl Ether	ND	ug/L	9.4	2.2		
BLM-32-571	23-Nov-15	1511231524B	8270D	8270	59-50-7	4-Chloro-3-methylphenol	ND	ug/L	9.4	1.2		
BLM-32-571	23-Nov-15	1511231524B	8270D	8270	7005-72-3	4-Chlorophenyl Phenyl Ether	ND	ug/L	9.4	1.2		
BLM-32-571	23-Nov-15	1511231524B	8270D	8270	100-01-6	4-Nitroaniline	ND	ug/L	47	7.8		
BLM-32-571	23-Nov-15	1511231524B	8270D	8270	100-02-7	4-Nitrophenol	ND	ug/L	47	5.9		
BLM-32-571	23-Nov-15	1511231524B	8270D	8270	56-57-5	4-Nitroquinoline N-Oxide	ND	ug/L	47	11		
BLM-32-571	23-Nov-15	1511231524B	8270D	8270	57-97-6	7,12-Dimethylbenz(a)anthracene	ND	ug/L	9.4	1.0		
BLM-32-571	23-Nov-15	1511231524B	8270D	8270	122-09-8	a,a-Dimethylphenethylamine	ND	ug/L	47	4.3		
BLM-32-571	23-Nov-15	1511231524B	8270D	8270	83-32-9	Acenaphthene	ND	ug/L	9.4	1.0		
BLM-32-571	23-Nov-15	1511231524B	8270D	8270	208-96-8	Acenaphthylene	ND	ug/L	9.4	1.0		
BLM-32-571	23-Nov-15	1511231524B	8270D	8270	208-96-8	Acenaphthylene	ND	ug/L	0.19	0.050		
BLM-32-571	23-Nov-15	1511231524B	8270D	8270	98-86-2	Acetophenone	ND	ug/L	9.4	1.6		
BLM-32-571	23-Nov-15	1511231524B	8270D	8270	62-53-3	Aniline	ND	ug/L	9.4	2.0		
BLM-32-571	23-Nov-15	1511231524B	8270D	8270	120-12-7	Anthracene	ND	ug/L	9.4	1.0		
BLM-32-571	23-Nov-15	1511231524B	8270D	8270	140-57-8	Aramite, Total	ND	ug/L	47	9.5		
BLM-32-571	23-Nov-15	1511231524B	8270D	8270	56-55-3	Benz(a)anthracene	ND	ug/L	0.19	0.050		
BLM-32-571	23-Nov-15	1511231524B	8270D	8270	003622-84-2	Benzenesulfonamide, N-butyl-	91	ug/L	NA	NA		TIC
BLM-32-571	23-Nov-15	1511231524B	8270D	8270	92-87-5	Benzidine	ND	ug/L	94	90		
BLM-32-571	23-Nov-15	1511231524B	8270D	8270	50-32-8	Benzo(a)pyrene	ND	ug/L	0.19	0.050		
BLM-32-571	23-Nov-15	1511231524B	8270D	8270	205-99-2	Benzo(b)fluoranthene	ND	ug/L	0.19	0.050		
BLM-32-571	23-Nov-15	1511231524B	8270D	8270	191-24-2	Benzo(g,h,i)perylene	ND	ug/L	9.4	1.0		
BLM-32-571	23-Nov-15	1511231524B	8270D	8270	207-08-9	Benzo(k)fluoranthene	ND	ug/L	0.19	0.050		
BLM-32-571	23-Nov-15	1511231524B	8270D	8270	100-51-6	Benzyl Alcohol	ND	ug/L	9.4	1.3		
BLM-32-571	23-Nov-15	1511231524B	8270D	8270	108-60-1	Bis(1-chloroisopropyl) Ether	ND	ug/L	9.4	1.0		
BLM-32-571	23-Nov-15	1511231524B	8270D	8270	111-91-1	Bis(2-chloroethoxy)methane	ND	ug/L	9.4	2.2		
BLM-32-571	23-Nov-15	1511231524B	8270D	8270	111-44-4	Bis(2-chloroethyl) Ether	ND	ug/L	9.4	1.3		
BLM-32-571	23-Nov-15	1511231524B	8270D	8270	117-81-7	Bis(2-ethylhexyl) Phthalate	ND	ug/L	4.7	0.57		
BLM-32-571	23-Nov-15	1511231524B	8270D	8270	85-68-7	Butyl Benzyl Phthalate	ND	ug/L	9.4	2.4		
BLM-32-571	23-Nov-15	1511231524B	8270D	8270	510-15-6	Chlorobenzilate	ND	ug/L	9.4	1.0		
BLM-32-571	23-Nov-15	1511231524B	8270D	8270	218-01-9	Chrysene	ND	ug/L	0.19	0.050		
BLM-32-571	23-Nov-15	1511231524B	8270D	8270	2303-16-4	Diallate	ND	ug/L	9.4	1.3		

wellname	event_date	sample_number	spec_method	analysis	casno	analyte	result	units	PQL	MDL	extract effiency	qa_flag
BLM-32-571	23-Nov-15	1511231524B	8270D	8270	53-70-3	Dibenz(a,h)anthracene	ND	ug/L	0.19	0.050		
BLM-32-571	23-Nov-15	1511231524B	8270D	8270	132-64-9	Dibenzofuran	ND	ug/L	9.4	1.0		
BLM-32-571	23-Nov-15	1511231524B	8270D	8270	84-66-2	Diethyl Phthalate	ND	ug/L	9.4	1.0		
BLM-32-571	23-Nov-15	1511231524B	8270D	8270	60-51-5	Dimethoate	ND	ug/L	47	8.7		
BLM-32-571	23-Nov-15	1511231524B	8270D	8270	131-11-3	Dimethyl Phthalate	ND	ug/L	9.4	1.0		
BLM-32-571	23-Nov-15	1511231524B	8270D	8270	84-74-2	Di-n-butyl Phthalate	ND	ug/L	9.4	1.0		
BLM-32-571	23-Nov-15	1511231524B	8270D	8270	117-84-0	Di-n-octyl Phthalate	ND	ug/L	9.4	1.2		
BLM-32-571	23-Nov-15	1511231524B	8270D	8270	122-39-4	Diphenylamine	ND	ug/L	9.4	NA		*
BLM-32-571	23-Nov-15	1511231524B	8270D	8270	298-04-4	Disulfoton	ND	ug/L	9.4	1.2		
BLM-32-571	23-Nov-15	1511231524B	8270D	8270	62-50-0	Ethyl Methanesulfonate	ND	ug/L	9.4	1.0		
BLM-32-571	23-Nov-15	1511231524B	8270D	8270	206-44-0	Fluoranthene	ND	ug/L	9.4	1.0		
BLM-32-571	23-Nov-15	1511231524B	8270D	8270	86-73-7	Fluorene	ND	ug/L	9.4	1.0		
BLM-32-571	23-Nov-15	1511231524B	8270D	8270	118-74-1	Hexachlorobenzene	ND	ug/L	0.19	0.050		
BLM-32-571	23-Nov-15	1511231524B	8270D	8270	87-68-3	Hexachlorobutadiene	ND	ug/L	9.4	1.3		
BLM-32-571	23-Nov-15	1511231524B	8270D	8270	77-47-4	Hexachlorocyclopentadiene	ND	ug/L	9.4	1.0		
BLM-32-571	23-Nov-15	1511231524B	8270D	8270	67-72-1	Hexachloroethane	ND	ug/L	9.4	1.2		
BLM-32-571	23-Nov-15	1511231524B	8270D	8270	70-30-4	Hexachlorophene	ND	ug/L	470	55		
BLM-32-571	23-Nov-15	1511231524B	8270D	8270	1888-71-7	Hexachloropropene	ND	ug/L	9.4	1.0		
BLM-32-571	23-Nov-15	1511231524B	8270D	8270	193-39-5	Indeno(1,2,3-cd)pyrene	ND	ug/L	0.19	0.050		
BLM-32-571	23-Nov-15	1511231524B	8270D	8270	465-73-6	Isodrin	ND	ug/L	9.4	1.8		
BLM-32-571	23-Nov-15	1511231524B	8270D	8270	78-59-1	Isophorone	ND	ug/L	9.4	1.0		
BLM-32-571	23-Nov-15	1511231524B	8270D	8270	120-58-1	Isosafrole	ND	ug/L	9.4	3.8		
BLM-32-571	23-Nov-15	1511231524B	8270D	8270	91-80-5	Methapyrilene	ND	ug/L	47	26		
BLM-32-571	23-Nov-15	1511231524B	8270D	8270	66-27-3	Methyl Methanesulfonate	ND	ug/L	9.4	1.0		
BLM-32-571	23-Nov-15	1511231524B	8270D	8270	298-00-0	Methyl Parathion	ND	ug/L	9.4	1.3		
BLM-32-571	23-Nov-15	1511231524B	8270D	8270	91-20-3	Naphthalene	ND	ug/L	9.4	1.0		
BLM-32-571	23-Nov-15	1511231524B	8270D	8270	98-95-3	Nitrobenzene	ND	ug/L	9.4	1.6		
BLM-32-571	23-Nov-15	1511231524B	8270D	8270	55-18-5	N-Nitrosodiethylamine	ND	ug/L	9.4	1.0		
BLM-32-571	23-Nov-15	1511231524B	8270D	8270	62-75-9	N-Nitrosodimethylamine	ND	ug/L	9.4	1.0		
BLM-32-571	23-Nov-15	1511231524B	8270D	8270	86-30-6	N-Nitrosodiphenylamine	ND	ug/L	9.4	1.0		
BLM-32-571	23-Nov-15	1511231524B	8270D	8270	10595-95-6	N-Nitrosomethylethylamine	ND	ug/L	9.4	1.8		
BLM-32-571	23-Nov-15	1511231524B	8270D	8270	59-89-2	N-Nitrosomorpholine	ND	ug/L	9.4	1.2		
BLM-32-571	23-Nov-15	1511231524B	8270D	8270	621-64-7	N-Nitroso-N-Dipropylamine	ND	ug/L	9.4	1.3		
BLM-32-571	23-Nov-15	1511231524B	8270D	8270	100-75-4	N-Nitrosopiperidine	ND	ug/L	9.4	1.1		
BLM-32-571	23-Nov-15	1511231524B	8270D	8270	930-55-2	N-Nitrosopyrrolidine	ND	ug/L	9.4	1.0		
BLM-32-571	23-Nov-15	1511231524B	8270D	8270	126-68-1	O,O,O-Triethyl Phosphorothioate	ND	ug/L	9.4	2.0		
BLM-32-571	23-Nov-15	1511231524B	8270D	8270	95-53-4	o-Toluidine	ND	ug/L	9.4	2.1		
BLM-32-571	23-Nov-15	1511231524B	8270D	8270	56-38-2	Parathion	ND	ug/L	9.4	1.7		
BLM-32-571	23-Nov-15	1511231524B	8270D	8270	106-47-8	p-Chloroaniline	ND	ug/L	9.4	1.5		

wellname	event_date	sample_number	spec_method	analysis	casno	analyte	result	units	PQL	MDL	extract effiency	qa_flag
BLM-32-571	23-Nov-15	1511231524B	8270D	8270	60-11-7	p-Dimethylaminoazobenzene	ND	ug/L	9.4	1.0		
BLM-32-571	23-Nov-15	1511231524B	8270D	8270	608-93-5	Pentachlorobenzene	ND	ug/L	9.4	1.0		
BLM-32-571	23-Nov-15	1511231524B	8270D	8270	76-01-7	Pentachloroethane	ND	ug/L	9.4	1.7		
BLM-32-571	23-Nov-15	1511231524B	8270D	8270	82-68-8	Pentachloronitrobenzene (PCNB)	ND	ug/L	9.4	1.5		
BLM-32-571	23-Nov-15	1511231524B	8270D	8270	62-44-2	Phenacetin	ND	ug/L	9.4	1.8		
BLM-32-571	23-Nov-15	1511231524B	8270D	8270	85-01-8	Phenanthrene	ND	ug/L	9.4	1.0		
BLM-32-571	23-Nov-15	1511231524B	8270D	8270	108-95-2	Phenol	ND	ug/L	9.4	1.0		
BLM-32-571	23-Nov-15	1511231524B	8270D	8270	298-02-2	Phorate	ND	ug/L	9.4	1.0		
BLM-32-571	23-Nov-15	1511231524B	8270D	8270	23950-58-5	Pronamide	ND	ug/L	9.4	1.3		
BLM-32-571	23-Nov-15	1511231524B	8270D	8270	129-00-0	Pyrene	ND	ug/L	9.4	1.0		
BLM-32-571	23-Nov-15	1511231524B	8270D	8270	110-86-1	Pyridine	ND	ug/L	47	16		
BLM-32-571	23-Nov-15	1511231524B	8270D	8270	94-59-7	Safrole	ND	ug/L	9.4	1.1		
BLM-32-571	23-Nov-15	1511231524B	8270D	8270	3689-24-5	Sulfotep	ND	ug/L	9.4	2.0		
BLM-32-571	23-Nov-15	1511231524B	8270D	8270	297-97-2	Thionazin	ND	ug/L	9.4	1.8		
BLM-32-571	23-Nov-15	1511231716B	SM 2540 C-1997(20	SM2540C	NA	Total Dissolved Solids (TDS)	659	mg/L	10	4		
BLM-32-571	23-Nov-15	1511231416B	8260C	8260_LL	630-20-6	1,1,1,2-Tetrachloroethane	ND	ug/L	0.50	0.20		
BLM-32-571	23-Nov-15	1511231416B	8260C	8260_LL	71-55-6	1,1,1-Trichloroethane (TCA)	ND	ug/L	0.50	0.36		
BLM-32-571	23-Nov-15	1511231416B	8260C	8260_LL	79-34-5	1,1,2,2-Tetrachloroethane	ND	ug/L	0.50	0.20		
BLM-32-571	23-Nov-15	1511231416B	8260C	8260_LL	76-13-1	1,1,2-Trichloro-1,2,2-Trifluoroethane	ND	ug/L	0.50	0.31		
BLM-32-571	23-Nov-15	1511231416B	8260C	8260_LL	79-00-5	1,1,2-Trichloroethane	ND	ug/L	0.50	0.23		
BLM-32-571	23-Nov-15	1511231416B	8260C	8260_LL	75-34-3	1,1-Dichloroethane (1,1-DCA)	ND	ug/L	0.50	0.20		
BLM-32-571	23-Nov-15	1511231416B	8260C	8260_LL	75-35-4	1,1-Dichloroethene	ND	ug/L	0.50	0.28		
BLM-32-571	23-Nov-15	1511231416B	8260C	8260_LL	96-18-4	1,2,3-Trichloropropane	ND	ug/L	0.50	0.32		
BLM-32-571	23-Nov-15	1511231416B	8260C	8260_LL	96-12-8	1,2-Dibromo-3-chloropropane (DBCP)	ND	ug/L	1.0	0.74		
BLM-32-571	23-Nov-15	1511231416B	8260C	8260_LL	106-93-4	1,2-Dibromoethane	ND	ug/L	0.50	0.24		
BLM-32-571	23-Nov-15	1511231416B	8260C	8260_LL	354-23-4	1,2-Dichloro-1,1,2-trifluoroethane (CFC 123a)	ND	ug/L	0.50	0.20		
BLM-32-571	23-Nov-15	1511231416B	8260C	8260_LL	107-06-2	1,2-Dichloroethane	ND	ug/L	0.50	0.20		
BLM-32-571	23-Nov-15	1511231416B	8260C	8260_LL	78-87-5	1,2-Dichloropropane	ND	ug/L	0.50	0.20		
BLM-32-571	23-Nov-15	1511231416B	8260C	8260_LL	123-91-1	1,4-Dioxane	ND	ug/L	40	18		
BLM-32-571	23-Nov-15	1511231416B	8260C	8260_LL	306-83-2	2,2-Dichloro-1,1,1-trifluoroethane (CFC 123)	ND	ug/L	0.50	0.32		

wellname	event_date	sample_number	spec_method	analysis	casno	analyte	result	units	PQL	MDL	extract effiency	qa_flag
BLM-32-571	23-Nov-15	1511231416B	8260C	8260_LL	78-93-3	2-Butanone (MEK)	ND	ug/L	5.0	0.81		
BLM-32-571	23-Nov-15	1511231416B	8260C	8260_LL	126-99-8	2-Chloro-1,3-butadiene	ND	ug/L	0.50	0.22		
BLM-32-571	23-Nov-15	1511231416B	8260C	8260_LL	591-78-6	2-Hexanone	ND	ug/L	5.0	0.73		
BLM-32-571	23-Nov-15	1511231416B	8260C	8260_LL	78-83-1	2-Methyl-1-propanol (Isobutyl Alcohol)	ND	ug/L	100	8.1		
BLM-32-571	23-Nov-15	1511231416B	8260C	8260_LL	67-63-0	2-Propanol	ND	ug/L	40	8.6		
BLM-32-571	23-Nov-15	1511231416B	8260C	8260_LL	107-05-1	3-Chloro-1-propene (Allyl Chloride)	ND	ug/L	0.50	0.25		
BLM-32-571	23-Nov-15	1511231416B	8260C	8260_LL	108-10-1	4-Methyl-2-pentanone	ND	ug/L	2.0	0.20		
BLM-32-571	23-Nov-15	1511231416B	8260C	8260_LL	67-64-1	Acetone	2.1	ug/L	5.0	1.3		J
BLM-32-571	23-Nov-15	1511231416B	8260C	8260_LL	75-05-8	Acetonitrile	ND	ug/L	25	3.7		
BLM-32-571	23-Nov-15	1511231416B	8260C	8260_LL	107-02-8	Acrolein	ND	ug/L	5.0	3.0		
BLM-32-571	23-Nov-15	1511231416B	8260C	8260_LL	107-13-1	Acrylonitrile	ND	ug/L	2.5	0.78		
BLM-32-571	23-Nov-15	1511231416B	8260C	8260_LL	71-43-2	Benzene	ND	ug/L	0.50	0.20		
BLM-32-571	23-Nov-15	1511231416B	8260C	8260_LL	75-27-4	Bromodichloromethane	ND	ug/L	0.50	0.32		
BLM-32-571	23-Nov-15	1511231416B	8260C	8260_LL	75-25-2	Bromoform	ND	ug/L	1.0	0.21		
BLM-32-571	23-Nov-15	1511231416B	8260C	8260_LL	74-83-9	Bromomethane	ND	ug/L	0.50	0.24		
BLM-32-571	23-Nov-15	1511231416B	8260C	8260_LL	75-15-0	Carbon Disulfide	ND	ug/L	0.50	0.20		
BLM-32-571	23-Nov-15	1511231416B	8260C	8260_LL	56-23-5	Carbon Tetrachloride	ND	ug/L	0.50	0.45		
BLM-32-571	23-Nov-15	1511231416B	8260C	8260_LL	108-90-7	Chlorobenzene	ND	ug/L	0.50	0.20		
BLM-32-571	23-Nov-15	1511231416B	8260C	8260_LL	75-00-3	Chloroethane	ND	ug/L	0.50	0.22		
BLM-32-571	23-Nov-15	1511231416B	8260C	8260_LL	67-66-3	Chloroform	ND	ug/L	0.50	0.20		
BLM-32-571	23-Nov-15	1511231416B	8260C	8260_LL	74-87-3	Chloromethane	ND	ug/L	0.50	0.20		
BLM-32-571	23-Nov-15	1511231416B	8260C	8260_LL	156-59-2	cis-1,2-Dichloroethene	ND	ug/L	0.50	0.20		
BLM-32-571	23-Nov-15	1511231416B	8260C	8260_LL	10061-01-5	cis-1,3-Dichloropropene	ND	ug/L	0.50	0.20		
BLM-32-571	23-Nov-15	1511231416B	8260C	8260_LL	110-82-7	Cyclohexane	ND	ug/L	1.0	0.25		
BLM-32-571	23-Nov-15	1511231416B	8260C	8260_LL	124-48-1	Dibromochloromethane	ND	ug/L	0.50	0.20		
BLM-32-571	23-Nov-15	1511231416B	8260C	8260_LL	74-95-3	Dibromomethane	ND	ug/L	0.50	0.22		
BLM-32-571	23-Nov-15	1511231416B	8260C	8260_LL	75-71-8	Dichlorodifluoromethane (CFC 12)	ND	ug/L	0.50	0.21		
BLM-32-571	23-Nov-15	1511231416B	8260C	8260_LL	75-43-4	Dichlorofluoromethane (CFC 21)	ND	ug/L	0.50	0.20		
BLM-32-571	23-Nov-15	1511231416B	8260C	8260_LL	75-09-2	Dichloromethane	ND	ug/L	0.50	0.20		
BLM-32-571	23-Nov-15	1511231416B	8260C	8260_LL	97-63-2	Ethyl Methacrylate	ND	ug/L	0.50	0.20		
BLM-32-571	23-Nov-15	1511231416B	8260C	8260_LL	100-41-4	Ethylbenzene	ND	ug/L	0.50	0.20		
BLM-32-571	23-Nov-15	1511231416B	8260C	8260_LL	74-88-4	Iodomethane	ND	ug/L	5.0	0.27		
BLM-32-571	23-Nov-15	1511231416B	8260C	8260_LL	179601-23-1	m,p-Xylenes	ND	ug/L	1.0	0.26		
BLM-32-571	23-Nov-15	1511231416B	8260C	8260_LL	126-98-7	Methacrylonitrile	ND	ug/L	1.0	0.50		
BLM-32-571	23-Nov-15	1511231416B	8260C	8260_LL	80-62-6	Methyl Methacrylate	ND	ug/L	0.50	0.39		
BLM-32-571	23-Nov-15	1511231416B	8260C	8260_LL	1634-04-4	Methyl tert-Butyl Ether	ND	ug/L	0.50	0.20		
BLM-32-571	23-Nov-15	1511231416B	8260C	8260_LL	108-87-2	Methylcyclohexane	ND	ug/L	1.0	0.27		
BLM-32-571	23-Nov-15	1511231416B	8260C	8260_LL	95-47-6	o-Xylene	ND	ug/L	0.50	0.20		
BLM-32-571	23-Nov-15	1511231416B	8260C	8260_LL	107-12-0	Propionitrile	ND	ug/L	2.5	1.7		

wellname	event_date	sample_number	spec_method	analysis	casno	analyte	result	units	PQL	MDL	extract effiency	qa_flag
BLM-32-571	23-Nov-15	1511231416B	8260C	8260_LL	100-42-5	Styrene	ND	ug/L	0.50	0.20		
BLM-32-571	23-Nov-15	1511231416B	8260C	8260_LL	127-18-4	Tetrachloroethene (PCE)	ND	ug/L	0.50	0.20		
BLM-32-571	23-Nov-15	1511231416B	8260C	8260_LL	109-99-9	Tetrahydrofuran (THF)	ND	ug/L	5.0	0.66		
BLM-32-571	23-Nov-15	1511231416B	8260C	8260_LL	108-88-3	Toluene	1.5	ug/L	0.50	0.20		
BLM-32-571	23-Nov-15	1511231416B	8260C	8260_LL	156-60-5	trans-1,2-Dichloroethene	ND	ug/L	0.50	0.20		
BLM-32-571	23-Nov-15	1511231416B	8260C	8260_LL	10061-02-6	trans-1,3-Dichloropropene	ND	ug/L	0.50	0.20		
BLM-32-571	23-Nov-15	1511231416B	8260C	8260_LL	110-57-6	trans-1,4-Dichloro-2-butene	ND	ug/L	0.52	0.52		
BLM-32-571	23-Nov-15	1511231416B	8260C	8260_LL	79-01-6	Trichloroethene (TCE)	ND	ug/L	0.50	0.20		
BLM-32-571	23-Nov-15	1511231416B	8260C	8260_LL	75-69-4	Trichlorofluoromethane (CFC 11)	ND	ug/L	0.50	0.20		
BLM-32-571	23-Nov-15	1511231416B	8260C	8260_LL	108-05-4	Vinyl Acetate	ND	ug/L	1.0	0.78		
BLM-32-571	23-Nov-15	1511231416B	8260C	8260_LL	75-01-4	Vinyl Chloride	ND	ug/L	0.50	0.22		
BLM-32-632	23-Nov-15	1511231647B	SM 2320 B-1997(20	ANIONS	NA	Alkalinity, Total as CaCO3	188	mg/L	2.0	0.3		
BLM-32-632	23-Nov-15	1511231647B	300.0	ANIONS	16887-00-6	Chloride	48.9	mg/L	2.0	1.0		
BLM-32-632	23-Nov-15	1511231647B	300.0	ANIONS	16984-48-8	Fluoride, undistilled	0.83	mg/L	0.10	0.008		
BLM-32-632	23-Nov-15	1511231647B	300.0	ANIONS	14808-79-8	Sulfate	315	mg/L	8.0	0.8		
BLM-32-632	23-Nov-15	1511231739B	PARAMS	PARAMS	NA	Conductivity	975	µS/cm	NA	NA		
BLM-32-632	23-Nov-15	1511231739B	PARAMS	PARAMS	NA	pH	7.60	NA	NA	NA		
BLM-32-632	23-Nov-15	1511231739B	PARAMS	PARAMS	NA	Temperature	10.9	ºC	NA	NA		
BLM-32-632	23-Nov-15	1511231739B	PARAMS	PARAMS	NA	Transcuder	NA	ft	NA	NA		
BLM-32-632	23-Nov-15	1511231739B	PARAMS	PARAMS	NA	Turbidity	1.05	NTU	NA	NA		
BLM-32-632	23-Nov-15	1511231500B	PARAMS	PARAMS	NA	Conductivity	965	µS/cm	NA	NA		
BLM-32-632	23-Nov-15	1511231500B	PARAMS	PARAMS	NA	pH	9.07	NA	NA	NA		
BLM-32-632	23-Nov-15	1511231500B	PARAMS	PARAMS	NA	Temperature	19.0	ºC	NA	NA		
BLM-32-632	23-Nov-15	1511231500B	PARAMS	PARAMS	NA	Transducer	NA	ft	NA	NA		
BLM-32-632	23-Nov-15	1511231500B	PARAMS	PARAMS	NA	Turbidity	1.33	NTU	NA	NA		
BLM-32-632	23-Nov-15	1511231642B	6010C	METALS	7429-90-5	Aluminum, Total	ND	mg/L	0.10	0.009		
BLM-32-632	23-Nov-15	1511231642B	6020A	METALS	7440-36-0	Antimony, Total	ND	mg/L	0.0010	0.0004		
BLM-32-632	23-Nov-15	1511231642B	6020A	METALS	7440-38-2	Arsenic, Total	0.0007	mg/L	0.0010	0.0004		J
BLM-32-632	23-Nov-15	1511231642B	6010C	METALS	7440-39-3	Barium, Total	0.041	mg/L	0.020	0.0008		
BLM-32-632	23-Nov-15	1511231642B	6010C	METALS	7440-41-7	Beryllium, Total	ND	mg/L	0.0030	0.0002		
BLM-32-632	23-Nov-15	1511231642B	6010C	METALS	7440-42-8	Boron, Total	0.11	mg/L	0.20	0.03		J RB
BLM-32-632	23-Nov-15	1511231642B	6010C	METALS	7440-43-9	Cadmium, Total	ND	mg/L	0.0050	0.0002		
BLM-32-632	23-Nov-15	1511231642B	6010C	METALS	7440-70-2	Calcium, Total	84.5	mg/L	5.0	0.3		
BLM-32-632	23-Nov-15	1511231642B	6010C	METALS	7440-47-3	Chromium, Total	ND	mg/L	0.010	0.0004		
BLM-32-632	23-Nov-15	1511231642B	6010C	METALS	7440-48-4	Cobalt, Total	ND	mg/L	0.050	0.0009		
BLM-32-632	23-Nov-15	1511231642B	6010C	METALS	7440-50-8	Copper, Total	ND	mg/L	0.020	0.003		
BLM-32-632	23-Nov-15	1511231642B	6010C	METALS	7439-89-6	Iron, Total	ND	mg/L	0.10	0.010		
BLM-32-632	23-Nov-15	1511231642B	6010C	METALS	7439-92-1	Lead, Total	ND	mg/L	0.050	0.005		
BLM-32-632	23-Nov-15	1511231642B	6010C	METALS	7439-95-4	Magnesium, Total	59	mg/L	1.0	0.010		

wellname	event_date	sample_number	spec_method	analysis	casno	analyte	result	units	PQL	MDL	extract effiency	qa_flag
BLM-32-632	23-Nov-15	1511231642B	6010C	METALS	7439-96-5	Manganese, Total	0.014	mg/L	0.010	0.002		J
BLM-32-632	23-Nov-15	1511231642B	7470A	METALS	7439-97-6	Mercury, Total	0.00004	mg/L	0.00020	0.00004		J
BLM-32-632	23-Nov-15	1511231642B	6010C	METALS	7439-98-7	Molybdenum, Total	0.007	mg/L	0.025	0.0007		J RB
BLM-32-632	23-Nov-15	1511231642B	6010C	METALS	7440-02-0	Nickel, Total	ND	mg/L	0.040	0.002		
BLM-32-632	23-Nov-15	1511231642B	6010C	METALS	7440-09-7	Potassium, Total	3.1	mg/L	2.0	0.05		
BLM-32-632	23-Nov-15	1511231642B	6010C	METALS	7782-49-2	Selenium, Total	ND	mg/L	0.010	0.005		
BLM-32-632	23-Nov-15	1511231642B	6010C	METALS	7440-22-4	Silver, Total	0.001	mg/L	0.010	0.0006		J
BLM-32-632	23-Nov-15	1511231642B	6010C	METALS	7440-23-5	Sodium, Total	38	mg/L	1.0	0.09		
BLM-32-632	23-Nov-15	1511231642B	6010C	METALS	7440-24-6	Strontium, Total	2.15	mg/L	0.10	0.0005		
BLM-32-632	23-Nov-15	1511231642B	6020A	METALS	7440-28-0	Thallium, Total	ND	mg/L	0.0010	0.00003		
BLM-32-632	23-Nov-15	1511231642B	6010C	METALS	7440-31-5	Tin, Total	ND	mg/L	0.50	0.02		
BLM-32-632	23-Nov-15	1511231642B	6010C	METALS	7440-62-2	Vanadium, Total	ND	mg/L	0.050	0.0010		
BLM-32-632	23-Nov-15	1511231642B	6010C	METALS	7440-66-6	Zinc, Total	0.081	mg/L	0.020	0.007		
BLM-32-632	23-Nov-15	1511231504B	TAP 01-0408-031	607	314-40-9	Bromacil	ND	ug/L	0.0098	0.0049	89	
BLM-32-632	23-Nov-15	1511231504B	TAP 01-0408-031	607	4164-28-7	N-Nitrodimethylamine	ND	ug/L	0.0098	0.0049	71	
BLM-32-632	23-Nov-15	1511231504B	TAP 01-0408-031	607	62-75-9	N-Nitrosodimethylamine	ND	ug/L	0.0098	0.0049	39	
BLM-32-632	23-Nov-15	1511231537B	TAP 01-0403-015	NDMA_LL	4164-28-7	N-Nitrodimethylamine	0.39	ng/L	0.49	0.17		J
BLM-32-632	23-Nov-15	1511231537B	TAP 01-0403-015	NDMA_LL	62-75-9	N-Nitrosodimethylamine	1.3	ng/L	0.49	0.36		
BLM-32-632	23-Nov-15	1511231737B	353.2	353.2	NA	Nitrate+Nitrite as Nitrogen	1.66	mg/L	0.050	0.003		
BLM-32-632	23-Nov-15	1511231735B	6850	6850	14797-73-0	Perchlorate	0.55	ug/L	0.20	0.026		
BLM-32-632	23-Nov-15	1511231612B	8270D	8270	95-94-3	1,2,4,5-Tetrachlorobenzene	ND	ug/L	9.4	1.9		
BLM-32-632	23-Nov-15	1511231612B	8270D	8270	120-82-1	1,2,4-Trichlorobenzene	ND	ug/L	9.4	1.0		
BLM-32-632	23-Nov-15	1511231612B	8270D	8270	95-50-1	1,2-Dichlorobenzene	ND	ug/L	9.4	1.0		
BLM-32-632	23-Nov-15	1511231612B	8270D	8270	122-66-7	1,2-Diphenylhydrazine	ND	ug/L	9.4	1.0		
BLM-32-632	23-Nov-15	1511231612B	8270D	8270	99-35-4	1,3,5-Trinitrobenzene	ND	ug/L	9.4	2.5		
BLM-32-632	23-Nov-15	1511231612B	8270D	8270	541-73-1	1,3-Dichlorobenzene	ND	ug/L	9.4	1.0		
BLM-32-632	23-Nov-15	1511231612B	8270D	8270	99-65-0	1,3-Dinitrobenzene	ND	ug/L	9.4	3.8		
BLM-32-632	23-Nov-15	1511231612B	8270D	8270	106-46-7	1,4-Dichlorobenzene	ND	ug/L	9.4	1.0		
BLM-32-632	23-Nov-15	1511231612B	8270D	8270	130-15-4	1,4-Naphthoquinone	ND	ug/L	47	2.9		
BLM-32-632	23-Nov-15	1511231612B	8270D	8270	106-50-3	1,4-Phenylenediamine	ND	ug/L	47	NA		*
BLM-32-632	23-Nov-15	1511231612B	8270D	8270	90-12-0	1-Methylnaphthalene	ND	ug/L	9.4	1.4		
BLM-32-632	23-Nov-15	1511231612B	8270D	8270	134-32-7	1-Naphthylamine	ND	ug/L	47	9.2		
BLM-32-632	23-Nov-15	1511231612B	8270D	8270	58-90-2	2,3,4,6-Tetrachlorophenol	ND	ug/L	9.4	2.0		
BLM-32-632	23-Nov-15	1511231612B	8270D	8270	95-95-4	2,4,5-Trichlorophenol	ND	ug/L	9.4	1.8		
BLM-32-632	23-Nov-15	1511231612B	8270D	8270	88-06-2	2,4,6-Trichlorophenol	ND	ug/L	9.4	1.4		

wellname	event_date	sample_number	spec_method	analysis	casno	analyte	result	units	PQL	MDL	extract effiency	qa_flag
BLM-32-632	23-Nov-15	1511231612B	8270D	8270	120-83-2	2,4-Dichlorophenol	ND	ug/L	9.4	1.3		
BLM-32-632	23-Nov-15	1511231612B	8270D	8270	105-67-9	2,4-Dimethylphenol	ND	ug/L	9.4	1.5		
BLM-32-632	23-Nov-15	1511231612B	8270D	8270	51-28-5	2,4-Dinitrophenol	ND	ug/L	47	20		
BLM-32-632	23-Nov-15	1511231612B	8270D	8270	121-14-2	2,4-Dinitrotoluene	ND	ug/L	9.4	1.6		
BLM-32-632	23-Nov-15	1511231612B	8270D	8270	87-65-0	2,6-Dichlorophenol	ND	ug/L	9.4	1.0		
BLM-32-632	23-Nov-15	1511231612B	8270D	8270	606-20-2	2,6-Dinitrotoluene	ND	ug/L	9.4	1.8		
BLM-32-632	23-Nov-15	1511231612B	8270D	8270	53-96-3	2-Acetylaminofluorene	ND	ug/L	9.4	1.0		
BLM-32-632	23-Nov-15	1511231612B	8270D	8270	91-58-7	2-Chloronaphthalene	ND	ug/L	9.4	1.0		
BLM-32-632	23-Nov-15	1511231612B	8270D	8270	95-57-8	2-Chlorophenol	ND	ug/L	9.4	1.0		
BLM-32-632	23-Nov-15	1511231612B	8270D	8270	99-55-8	2-Methyl-5-nitroaniline (5-Nitro-o-toluidine)	ND	ug/L	9.4	1.8		
BLM-32-632	23-Nov-15	1511231612B	8270D	8270	91-57-6	2-Methylnaphthalene	ND	ug/L	9.4	1.0		
BLM-32-632	23-Nov-15	1511231612B	8270D	8270	95-48-7	2-Methylphenol	ND	ug/L	9.4	1.0		
BLM-32-632	23-Nov-15	1511231612B	8270D	8270	91-59-8	2-Naphthylamine	ND	ug/L	47	5.1		
BLM-32-632	23-Nov-15	1511231612B	8270D	8270	88-74-4	2-Nitroaniline	ND	ug/L	47	9.1		
BLM-32-632	23-Nov-15	1511231612B	8270D	8270	88-75-5	2-Nitrophenol	ND	ug/L	9.4	1.4		
BLM-32-632	23-Nov-15	1511231612B	8270D	8270	109-06-8	2-Picoline	ND	ug/L	9.4	1.8		
BLM-32-632	23-Nov-15	1511231612B	8270D	8270	15831-10-4	3- and 4-Methylphenol Coelution	ND	ug/L	9.4	2.0		
BLM-32-632	23-Nov-15	1511231612B	8270D	8270	91-94-1	3,3'-Dichlorobenzidine	ND	ug/L	9.4	4.5		
BLM-32-632	23-Nov-15	1511231612B	8270D	8270	119-93-7	3,3'-Dimethylbenzidine	ND	ug/L	47	19		
BLM-32-632	23-Nov-15	1511231612B	8270D	8270	56-49-5	3-Methylcholanthrene	ND	ug/L	9.4	1.0		
BLM-32-632	23-Nov-15	1511231612B	8270D	8270	99-09-2	3-Nitroaniline	ND	ug/L	47	7.7		
BLM-32-632	23-Nov-15	1511231612B	8270D	8270	534-52-1	4,6-Dinitro-2-methylphenol	ND	ug/L	47	11		
BLM-32-632	23-Nov-15	1511231612B	8270D	8270	92-67-1	4-Aminobiphenyl	ND	ug/L	47	6.9		
BLM-32-632	23-Nov-15	1511231612B	8270D	8270	101-55-3	4-Bromophenyl Phenyl Ether	ND	ug/L	9.4	2.2		
BLM-32-632	23-Nov-15	1511231612B	8270D	8270	59-50-7	4-Chloro-3-methylphenol	ND	ug/L	9.4	1.2		
BLM-32-632	23-Nov-15	1511231612B	8270D	8270	7005-72-3	4-Chlorophenyl Phenyl Ether	ND	ug/L	9.4	1.2		
BLM-32-632	23-Nov-15	1511231612B	8270D	8270	100-01-6	4-Nitroaniline	ND	ug/L	47	7.8		
BLM-32-632	23-Nov-15	1511231612B	8270D	8270	100-02-7	4-Nitrophenol	ND	ug/L	47	5.9		
BLM-32-632	23-Nov-15	1511231612B	8270D	8270	56-57-5	4-Nitroquinoline N-Oxide	ND	ug/L	47	11		
BLM-32-632	23-Nov-15	1511231612B	8270D	8270	57-97-6	7,12-Dimethylbenz(a)anthracene	ND	ug/L	9.4	1.0		
BLM-32-632	23-Nov-15	1511231612B	8270D	8270	122-09-8	a,a-Dimethylphenethylamine	ND	ug/L	47	4.3		
BLM-32-632	23-Nov-15	1511231612B	8270D	8270	83-32-9	Acenaphthene	ND	ug/L	9.4	1.0		
BLM-32-632	23-Nov-15	1511231612B	8270D	8270	208-96-8	Acenaphthylene	ND	ug/L	9.4	1.0		
BLM-32-632	23-Nov-15	1511231612B	8270D	8270	208-96-8	Acenaphthylene	ND	ug/L	0.19	0.050		
BLM-32-632	23-Nov-15	1511231612B	8270D	8270	98-86-2	Acetophenone	ND	ug/L	9.4	1.6		

wellname	event_date	sample_number	spec_method	analysis	casno	analyte	result	units	PQL	MDL	extract effiency	qa_flag
BLM-32-632	23-Nov-15	1511231612B	8270D	8270	62-53-3	Aniline	ND	ug/L	9.4	2.0		
BLM-32-632	23-Nov-15	1511231612B	8270D	8270	120-12-7	Anthracene	ND	ug/L	9.4	1.0		
BLM-32-632	23-Nov-15	1511231612B	8270D	8270	140-57-8	Aramite, Total	ND	ug/L	47	9.5		
BLM-32-632	23-Nov-15	1511231612B	8270D	8270	56-55-3	Benz(a)anthracene	ND	ug/L	0.19	0.050		
BLM-32-632	23-Nov-15	1511231612B	8270D	8270	003622-84-2	Benzenesulfonamide, N-butyl-	73	ug/L	NA	NA		TIC
BLM-32-632	23-Nov-15	1511231612B	8270D	8270	92-87-5	Benzidine	ND	ug/L	94	90		
BLM-32-632	23-Nov-15	1511231612B	8270D	8270	50-32-8	Benzo(a)pyrene	ND	ug/L	0.19	0.050		
BLM-32-632	23-Nov-15	1511231612B	8270D	8270	205-99-2	Benzo(b)fluoranthene	ND	ug/L	0.19	0.050		
BLM-32-632	23-Nov-15	1511231612B	8270D	8270	191-24-2	Benzo(g,h,i)perylene	ND	ug/L	9.4	1.0		
BLM-32-632	23-Nov-15	1511231612B	8270D	8270	207-08-9	Benzo(k)fluoranthene	ND	ug/L	0.19	0.050		
BLM-32-632	23-Nov-15	1511231612B	8270D	8270	100-51-6	Benzyl Alcohol	ND	ug/L	9.4	1.3		
BLM-32-632	23-Nov-15	1511231612B	8270D	8270	108-60-1	Bis(1-chloroisopropyl) Ether	ND	ug/L	9.4	1.0		
BLM-32-632	23-Nov-15	1511231612B	8270D	8270	111-91-1	Bis(2-chloroethoxy)methane	ND	ug/L	9.4	2.2		
BLM-32-632	23-Nov-15	1511231612B	8270D	8270	111-44-4	Bis(2-chloroethyl) Ether	ND	ug/L	9.4	1.3		
BLM-32-632	23-Nov-15	1511231612B	8270D	8270	117-81-7	Bis(2-ethylhexyl) Phthalate	ND	ug/L	4.7	0.57		
BLM-32-632	23-Nov-15	1511231612B	8270D	8270	85-68-7	Butyl Benzyl Phthalate	ND	ug/L	9.4	2.4		
BLM-32-632	23-Nov-15	1511231612B	8270D	8270	510-15-6	Chlorobenzilate	ND	ug/L	9.4	1.0		
BLM-32-632	23-Nov-15	1511231612B	8270D	8270	218-01-9	Chrysene	ND	ug/L	0.19	0.050		
BLM-32-632	23-Nov-15	1511231612B	8270D	8270	2303-16-4	Diallate	ND	ug/L	9.4	1.3		
BLM-32-632	23-Nov-15	1511231612B	8270D	8270	53-70-3	Dibenz(a,h)anthracene	ND	ug/L	0.19	0.050		
BLM-32-632	23-Nov-15	1511231612B	8270D	8270	132-64-9	Dibenzofuran	ND	ug/L	9.4	1.0		
BLM-32-632	23-Nov-15	1511231612B	8270D	8270	84-66-2	Diethyl Phthalate	ND	ug/L	9.4	1.0		
BLM-32-632	23-Nov-15	1511231612B	8270D	8270	60-51-5	Dimethoate	ND	ug/L	47	8.7		
BLM-32-632	23-Nov-15	1511231612B	8270D	8270	131-11-3	Dimethyl Phthalate	ND	ug/L	9.4	1.0		
BLM-32-632	23-Nov-15	1511231612B	8270D	8270	84-74-2	Di-n-butyl Phthalate	ND	ug/L	9.4	1.0		
BLM-32-632	23-Nov-15	1511231612B	8270D	8270	117-84-0	Di-n-octyl Phthalate	ND	ug/L	9.4	1.2		
BLM-32-632	23-Nov-15	1511231612B	8270D	8270	122-39-4	Diphenylamine	ND	ug/L	9.4	NA		*
BLM-32-632	23-Nov-15	1511231612B	8270D	8270	298-04-4	Disulfoton	ND	ug/L	9.4	1.2		
BLM-32-632	23-Nov-15	1511231612B	8270D	8270	62-50-0	Ethyl Methanesulfonate	ND	ug/L	9.4	1.0		
BLM-32-632	23-Nov-15	1511231612B	8270D	8270	206-44-0	Fluoranthene	ND	ug/L	9.4	1.0		
BLM-32-632	23-Nov-15	1511231612B	8270D	8270	86-73-7	Fluorene	ND	ug/L	9.4	1.0		
BLM-32-632	23-Nov-15	1511231612B	8270D	8270	118-74-1	Hexachlorobenzene	ND	ug/L	0.19	0.050		
BLM-32-632	23-Nov-15	1511231612B	8270D	8270	87-68-3	Hexachlorobutadiene	ND	ug/L	9.4	1.3		
BLM-32-632	23-Nov-15	1511231612B	8270D	8270	77-47-4	Hexachlorocyclopentadiene	ND	ug/L	9.4	1.0		
BLM-32-632	23-Nov-15	1511231612B	8270D	8270	67-72-1	Hexachloroethane	ND	ug/L	9.4	1.2		
BLM-32-632	23-Nov-15	1511231612B	8270D	8270	70-30-4	Hexachlorophene	ND	ug/L	470	55		
BLM-32-632	23-Nov-15	1511231612B	8270D	8270	1888-71-7	Hexachloropropene	ND	ug/L	9.4	1.0		
BLM-32-632	23-Nov-15	1511231612B	8270D	8270	193-39-5	Indeno(1,2,3-cd)pyrene	ND	ug/L	0.19	0.050		

wellname	event_date	sample_number	spec_method	analysis	casno	analyte	result	units	PQL	MDL	extract effiency	qa_flag
BLM-32-632	23-Nov-15	1511231612B	8270D	8270	465-73-6	Isodrin	ND	ug/L	9.4	1.8		
BLM-32-632	23-Nov-15	1511231612B	8270D	8270	78-59-1	Isophorone	ND	ug/L	9.4	1.0		
BLM-32-632	23-Nov-15	1511231612B	8270D	8270	120-58-1	Isosafrole	ND	ug/L	9.4	3.8		
BLM-32-632	23-Nov-15	1511231612B	8270D	8270	91-80-5	Methapyrilene	ND	ug/L	47	26		
BLM-32-632	23-Nov-15	1511231612B	8270D	8270	66-27-3	Methyl Methanesulfonate	ND	ug/L	9.4	1.0		
BLM-32-632	23-Nov-15	1511231612B	8270D	8270	298-00-0	Methyl Parathion	ND	ug/L	9.4	1.3		
BLM-32-632	23-Nov-15	1511231612B	8270D	8270	91-20-3	Naphthalene	ND	ug/L	9.4	1.0		
BLM-32-632	23-Nov-15	1511231612B	8270D	8270	98-95-3	Nitrobenzene	ND	ug/L	9.4	1.6		
BLM-32-632	23-Nov-15	1511231612B	8270D	8270	55-18-5	N-Nitrosodiethylamine	ND	ug/L	9.4	1.0		
BLM-32-632	23-Nov-15	1511231612B	8270D	8270	62-75-9	N-Nitrosodimethylamine	ND	ug/L	9.4	1.0		
BLM-32-632	23-Nov-15	1511231612B	8270D	8270	86-30-6	N-Nitrosodiphenylamine	ND	ug/L	9.4	1.0		
BLM-32-632	23-Nov-15	1511231612B	8270D	8270	10595-95-6	N-Nitrosomethylethylamine	ND	ug/L	9.4	1.8		
BLM-32-632	23-Nov-15	1511231612B	8270D	8270	59-89-2	N-Nitrosomorpholine	ND	ug/L	9.4	1.2		
BLM-32-632	23-Nov-15	1511231612B	8270D	8270	621-64-7	N-Nitroso-N-Dipropylamine	ND	ug/L	9.4	1.3		
BLM-32-632	23-Nov-15	1511231612B	8270D	8270	100-75-4	N-Nitrosopiperidine	ND	ug/L	9.4	1.1		
BLM-32-632	23-Nov-15	1511231612B	8270D	8270	930-55-2	N-Nitrosopyrrolidine	ND	ug/L	9.4	1.0		
BLM-32-632	23-Nov-15	1511231612B	8270D	8270	126-68-1	O,O,O-Triethyl Phosphorothioate	ND	ug/L	9.4	2.0		
BLM-32-632	23-Nov-15	1511231612B	8270D	8270	95-53-4	o-Toluidine	ND	ug/L	9.4	2.1		
BLM-32-632	23-Nov-15	1511231612B	8270D	8270	56-38-2	Parathion	ND	ug/L	9.4	1.7		
BLM-32-632	23-Nov-15	1511231612B	8270D	8270	106-47-8	p-Chloroaniline	ND	ug/L	9.4	1.5		
BLM-32-632	23-Nov-15	1511231612B	8270D	8270	60-11-7	p-Dimethylaminoazobenzene	ND	ug/L	9.4	1.0		
BLM-32-632	23-Nov-15	1511231612B	8270D	8270	608-93-5	Pentachlorobenzene	ND	ug/L	9.4	1.0		
BLM-32-632	23-Nov-15	1511231612B	8270D	8270	76-01-7	Pentachloroethane	ND	ug/L	9.4	1.7		
BLM-32-632	23-Nov-15	1511231612B	8270D	8270	82-68-8	Pentachloronitrobenzene (PCNB)	ND	ug/L	9.4	1.5		
BLM-32-632	23-Nov-15	1511231612B	8270D	8270	62-44-2	Phenacetin	ND	ug/L	9.4	1.8		
BLM-32-632	23-Nov-15	1511231612B	8270D	8270	85-01-8	Phenanthrene	ND	ug/L	9.4	1.0		
BLM-32-632	23-Nov-15	1511231612B	8270D	8270	108-95-2	Phenol	ND	ug/L	9.4	1.0		
BLM-32-632	23-Nov-15	1511231612B	8270D	8270	298-02-2	Phorate	ND	ug/L	9.4	1.0		
BLM-32-632	23-Nov-15	1511231612B	8270D	8270	23950-58-5	Pronamide	ND	ug/L	9.4	1.3		
BLM-32-632	23-Nov-15	1511231612B	8270D	8270	129-00-0	Pyrene	ND	ug/L	9.4	1.0		
BLM-32-632	23-Nov-15	1511231612B	8270D	8270	110-86-1	Pyridine	ND	ug/L	47	16		
BLM-32-632	23-Nov-15	1511231612B	8270D	8270	94-59-7	Safrole	ND	ug/L	9.4	1.1		
BLM-32-632	23-Nov-15	1511231612B	8270D	8270	3689-24-5	Sulfotep	ND	ug/L	9.4	2.0		
BLM-32-632	23-Nov-15	1511231612B	8270D	8270	297-97-2	Thionazin	ND	ug/L	9.4	1.8		
BLM-32-632	23-Nov-15	1511231612B	8270D	8270	TIC	unknown	6	ug/L	NA	NA		TIC
BLM-32-632	23-Nov-15	1511231612B	8270D	8270	TIC	unknown	6.1	ug/L	NA	NA		TIC
BLM-32-632	23-Nov-15	1511231612B	8270D	8270	TIC	unknown	3.9	ug/L	NA	NA		TIC

wellname	event_date	sample_number	spec_method	analysis	casno	analyte	result	units	PQL	MDL	extract effiency	qa_flag
BLM-32-632	23-Nov-15	1511231733B	SM 2540 C-1997(20	SM2540C	NA	Total Dissolved Solids (TDS)	639	mg/L	10	4		
BLM-32-632	23-Nov-15	1511231503B	8260C	8260_LL	630-20-6	1,1,1,2-Tetrachloroethane	ND	ug/L	0.50	0.20		
BLM-32-632	23-Nov-15	1511231503B	8260C	8260_LL	71-55-6	1,1,1-Trichloroethane (TCA)	ND	ug/L	0.50	0.36		
BLM-32-632	23-Nov-15	1511231503B	8260C	8260_LL	79-34-5	1,1,2,2-Tetrachloroethane	ND	ug/L	0.50	0.20		
BLM-32-632	23-Nov-15	1511231503B	8260C	8260_LL	76-13-1	1,1,2-Trichloro-1,2,2-Trifluoroethane	ND	ug/L	0.50	0.31		
BLM-32-632	23-Nov-15	1511231503B	8260C	8260_LL	79-00-5	1,1,2-Trichloroethane	ND	ug/L	0.50	0.23		
BLM-32-632	23-Nov-15	1511231503B	8260C	8260_LL	75-34-3	1,1-Dichloroethane (1,1-DCA)	ND	ug/L	0.50	0.20		
BLM-32-632	23-Nov-15	1511231503B	8260C	8260_LL	75-35-4	1,1-Dichloroethene	ND	ug/L	0.50	0.28		
BLM-32-632	23-Nov-15	1511231503B	8260C	8260_LL	96-18-4	1,2,3-Trichloropropane	ND	ug/L	0.50	0.32		
BLM-32-632	23-Nov-15	1511231503B	8260C	8260_LL	96-12-8	1,2-Dibromo-3-chloropropane (DBCP)	ND	ug/L	1.0	0.74		
BLM-32-632	23-Nov-15	1511231503B	8260C	8260_LL	106-93-4	1,2-Dibromoethane	ND	ug/L	0.50	0.24		
BLM-32-632	23-Nov-15	1511231503B	8260C	8260_LL	354-23-4	1,2-Dichloro-1,1,2-trifluoroethane (CFC 123a)	ND	ug/L	0.50	0.20		
BLM-32-632	23-Nov-15	1511231503B	8260C	8260_LL	107-06-2	1,2-Dichloroethane	ND	ug/L	0.50	0.20		
BLM-32-632	23-Nov-15	1511231503B	8260C	8260_LL	78-87-5	1,2-Dichloropropane	ND	ug/L	0.50	0.20		
BLM-32-632	23-Nov-15	1511231503B	8260C	8260_LL	123-91-1	1,4-Dioxane	ND	ug/L	40	18		
BLM-32-632	23-Nov-15	1511231503B	8260C	8260_LL	306-83-2	2,2-Dichloro-1,1,1-trifluoroethane (CFC 123)	ND	ug/L	0.50	0.32		
BLM-32-632	23-Nov-15	1511231503B	8260C	8260_LL	78-93-3	2-Butanone (MEK)	ND	ug/L	5.0	0.81		
BLM-32-632	23-Nov-15	1511231503B	8260C	8260_LL	126-99-8	2-Chloro-1,3-butadiene	ND	ug/L	0.50	0.22		
BLM-32-632	23-Nov-15	1511231503B	8260C	8260_LL	591-78-6	2-Hexanone	ND	ug/L	5.0	0.73		
BLM-32-632	23-Nov-15	1511231503B	8260C	8260_LL	78-83-1	2-Methyl-1-propanol (Isobutyl Alcohol)	ND	ug/L	100	8.1		
BLM-32-632	23-Nov-15	1511231503B	8260C	8260_LL	67-63-0	2-Propanol	ND	ug/L	40	8.6		
BLM-32-632	23-Nov-15	1511231503B	8260C	8260_LL	107-05-1	3-Chloro-1-propene (Allyl Chloride)	ND	ug/L	0.50	0.25		
BLM-32-632	23-Nov-15	1511231503B	8260C	8260_LL	108-10-1	4-Methyl-2-pentanone	ND	ug/L	2.0	0.20		
BLM-32-632	23-Nov-15	1511231503B	8260C	8260_LL	67-64-1	Acetone	1.3	ug/L	5.0	1.3		J
BLM-32-632	23-Nov-15	1511231503B	8260C	8260_LL	75-05-8	Acetonitrile	ND	ug/L	25	3.7		
BLM-32-632	23-Nov-15	1511231503B	8260C	8260_LL	107-02-8	Acrolein	ND	ug/L	5.0	3.0		
BLM-32-632	23-Nov-15	1511231503B	8260C	8260_LL	107-13-1	Acrylonitrile	ND	ug/L	2.5	0.78		
BLM-32-632	23-Nov-15	1511231503B	8260C	8260_LL	71-43-2	Benzene	ND	ug/L	0.50	0.20		
BLM-32-632	23-Nov-15	1511231503B	8260C	8260_LL	75-27-4	Bromodichloromethane	ND	ug/L	0.50	0.32		
BLM-32-632	23-Nov-15	1511231503B	8260C	8260_LL	75-25-2	Bromoform	ND	ug/L	1.0	0.21		
BLM-32-632	23-Nov-15	1511231503B	8260C	8260_LL	74-83-9	Bromomethane	ND	ug/L	0.50	0.24		

wellname	event_date	sample_number	spec_method	analysis	casno	analyte	result	units	PQL	MDL	extract effiency	qa_flag
BLM-32-632	23-Nov-15	1511231503B	8260C	8260_LL	75-15-0	Carbon Disulfide	ND	ug/L	0.50	0.20		
BLM-32-632	23-Nov-15	1511231503B	8260C	8260_LL	56-23-5	Carbon Tetrachloride	ND	ug/L	0.50	0.45		
BLM-32-632	23-Nov-15	1511231503B	8260C	8260_LL	108-90-7	Chlorobenzene	ND	ug/L	0.50	0.20		
BLM-32-632	23-Nov-15	1511231503B	8260C	8260_LL	75-00-3	Chloroethane	ND	ug/L	0.50	0.22		
BLM-32-632	23-Nov-15	1511231503B	8260C	8260_LL	67-66-3	Chloroform	ND	ug/L	0.50	0.20		
BLM-32-632	23-Nov-15	1511231503B	8260C	8260_LL	74-87-3	Chloromethane	ND	ug/L	0.50	0.20		
BLM-32-632	23-Nov-15	1511231503B	8260C	8260_LL	156-59-2	cis-1,2-Dichloroethene	ND	ug/L	0.50	0.20		
BLM-32-632	23-Nov-15	1511231503B	8260C	8260_LL	10061-01-5	cis-1,3-Dichloropropene	ND	ug/L	0.50	0.20		
BLM-32-632	23-Nov-15	1511231503B	8260C	8260_LL	110-82-7	Cyclohexane	ND	ug/L	1.0	0.25		
BLM-32-632	23-Nov-15	1511231503B	8260C	8260_LL	124-48-1	Dibromochloromethane	ND	ug/L	0.50	0.20		
BLM-32-632	23-Nov-15	1511231503B	8260C	8260_LL	74-95-3	Dibromomethane	ND	ug/L	0.50	0.22		
BLM-32-632	23-Nov-15	1511231503B	8260C	8260_LL	75-71-8	Dichlorodifluoromethane (CFC 12)	ND	ug/L	0.50	0.21		
BLM-32-632	23-Nov-15	1511231503B	8260C	8260_LL	75-43-4	Dichlorofluoromethane (CFC 21)	ND	ug/L	0.50	0.20		
BLM-32-632	23-Nov-15	1511231503B	8260C	8260_LL	75-09-2	Dichloromethane	ND	ug/L	0.50	0.20		
BLM-32-632	23-Nov-15	1511231503B	8260C	8260_LL	97-63-2	Ethyl Methacrylate	ND	ug/L	0.50	0.20		
BLM-32-632	23-Nov-15	1511231503B	8260C	8260_LL	100-41-4	Ethylbenzene	ND	ug/L	0.50	0.20		
BLM-32-632	23-Nov-15	1511231503B	8260C	8260_LL	74-88-4	Iodomethane	ND	ug/L	5.0	0.27		
BLM-32-632	23-Nov-15	1511231503B	8260C	8260_LL	179601-23-1	m,p-Xylenes	ND	ug/L	1.0	0.26		
BLM-32-632	23-Nov-15	1511231503B	8260C	8260_LL	126-98-7	Methacrylonitrile	ND	ug/L	1.0	0.50		
BLM-32-632	23-Nov-15	1511231503B	8260C	8260_LL	80-62-6	Methyl Methacrylate	ND	ug/L	0.50	0.39		
BLM-32-632	23-Nov-15	1511231503B	8260C	8260_LL	1634-04-4	Methyl tert-Butyl Ether	ND	ug/L	0.50	0.20		
BLM-32-632	23-Nov-15	1511231503B	8260C	8260_LL	108-87-2	Methylcyclohexane	ND	ug/L	1.0	0.27		
BLM-32-632	23-Nov-15	1511231503B	8260C	8260_LL	95-47-6	o-Xylene	ND	ug/L	0.50	0.20		
BLM-32-632	23-Nov-15	1511231503B	8260C	8260_LL	107-12-0	Propionitrile	ND	ug/L	2.5	1.7		
BLM-32-632	23-Nov-15	1511231503B	8260C	8260_LL	100-42-5	Styrene	ND	ug/L	0.50	0.20		
BLM-32-632	23-Nov-15	1511231503B	8260C	8260_LL	127-18-4	Tetrachloroethene (PCE)	ND	ug/L	0.50	0.20		
BLM-32-632	23-Nov-15	1511231503B	8260C	8260_LL	109-99-9	Tetrahydrofuran (THF)	ND	ug/L	5.0	0.66		
BLM-32-632	23-Nov-15	1511231503B	8260C	8260_LL	108-88-3	Toluene	0.85	ug/L	0.50	0.20		
BLM-32-632	23-Nov-15	1511231503B	8260C	8260_LL	156-60-5	trans-1,2-Dichloroethene	ND	ug/L	0.50	0.20		
BLM-32-632	23-Nov-15	1511231503B	8260C	8260_LL	10061-02-6	trans-1,3-Dichloropropene	ND	ug/L	0.50	0.20		
BLM-32-632	23-Nov-15	1511231503B	8260C	8260_LL	110-57-6	trans-1,4-Dichloro-2-butene	ND	ug/L	0.52	0.52		
BLM-32-632	23-Nov-15	1511231503B	8260C	8260_LL	79-01-6	Trichloroethene (TCE)	ND	ug/L	0.50	0.20		
BLM-32-632	23-Nov-15	1511231503B	8260C	8260_LL	75-69-4	Trichlorofluoromethane (CFC 11)	ND	ug/L	0.50	0.20		
BLM-32-632	23-Nov-15	1511231503B	8260C	8260_LL	108-05-4	Vinyl Acetate	ND	ug/L	1.0	0.78		
BLM-32-632	23-Nov-15	1511231503B	8260C	8260_LL	75-01-4	Vinyl Chloride	ND	ug/L	0.50	0.22		

National Aeronautics and
Space Administration

WW-4 and WW-5 Well Reconfiguration Summary Report

March 2016

NM8800019434
NASA Johnson Space Center White Sands Test Facility
12600 NASA Road Las Cruces, New Mexico 88012

NASA Johnson Space Center White Sands Test Facility
WW-4 and WW-5 Well Reconfiguration Summary Report

March 2016

I certify under penalty of law that this document and all attachments were prepared under my direction or supervision in accordance with a system designed to assure that qualified personnel properly gather and evaluate the information submitted. Based on my inquiry of the person or persons who manage the system, or those persons directly responsible for gathering the information, the information submitted is, to the best of my knowledge and belief, true, accurate, and complete. I am aware that there are significant penalties for submitting false information, including the possibility of fine and imprisonment for knowing violations.

Timothy J. Davis
Chief, NASA Environmental Office

3/30/16
Date

Table of Contents

Table of Contents iii
List of Figures and Tables iv
List of Acronyms v
1.0 Introduction 1
2.0 Well Background 1
2.1 Well WW-4: 2
2.2 Well WW-5: 2
3.0 Well Reconfiguration 3
3.1 Westbay Casing Removal 3
3.1.1 WW-4 3
3.1.2 WW-5 3
3.1.3 Casing Disposal 3
3.2 Redevelopment of Conventional Casing 3
3.2.1 Well WW-4 3
3.2.2 Well WW-5 3
3.3 PVC Conventional Casing Sump Backfilling 4
3.4 Video Logging 4
3.5 Sampling System Installation 4
3.5.1 Well WW-4 4
3.5.2 Well WW-5 4
4.0 Sampling and Analysis 5
5.0 Survey Information 5
6.0 Deviations From Work Plan 5
7.0 Waste Management 5
8.0 References 6
Figures 7
Tables 13
Appendix A WW-4 and WW-5 Redevelopment Sheets A-1
Appendix B WW-4 and WW-5 Initial FLUTe Sampling Analytical Data Table B-1

List of Figures and Tables

Figure 2.1 WW-4 and WW-5 Location Map 8
Figure 2.2 WW-4 Original Westbay Well Completion Diagram 9
Figure 2.3 WW-5 Original Westbay Well Completion Diagram 10
Figure 3.1 WW-4 FLUTe Well Completion Diagram 11
Figure 3.2 WW-5 FLUTe Well Completion Diagram 12
Table 6.1 Analytes Detected During First WW-4 Water FLUTe Sampling Event 14
Table 6.2 Analytes Detected During First WW-5 Water FLUTe Sampling Event 16

List of Acronyms

Amsl	Above mean sea level
bgs	below ground surface
FLUTe	Flexible Liner Underground Technologies, LLC
ft	Foot/feet
IDW	Investigation derived waste
in.	Inch(es)
JSC	Johnson Space Center
NASA	National Aeronautics and Space Administration
NDMA	N-nitrosodimethylamine
NMED	New Mexico Environment Department
PVC	Polyvinyl Chloride
WSTF	White Sands Test Facility
WW	Water Well
YJD	Yellow Jacket Drilling

1.0 Introduction

At the National Aeronautics and Space Administration (NASA) Johnson Space Center (JSC) White Sands Test Facility (WSTF), 44 groundwater monitoring wells were historically equipped with Westbay®[1] multiport groundwater sampling systems. In a letter dated June 25, 2010, the New Mexico Environment Department (NMED) directed NASA to develop and submit an investigation work plan for evaluating the representativeness of groundwater samples collected from Westbay groundwater monitoring wells at WSTF (NMED, 2010). NASA submitted the work plan to NMED on November 19, 2010 (NASA, 2010). The investigation was conducted, and the investigation report was submitted to NMED on October 20, 2011 (NASA, 2011). NMED issued an Approval with Modifications on December 16, 2011, directing NASA to replace or convert eight existing WSTF wells equipped with Westbay multiport monitoring systems to purgeable sampling systems (NMED, 2011). NASA submitted the *Westbay Well Conversion Work Plan* on November 1, 2012 (NASA, 2012b). The work plan provided information and scheduling for the replacement of Westbay sampling systems within the required eight groundwater monitoring wells at NASA WSTF. NMED approved the work plan on January 16, 2013 (NMED, 2013).

WSTF groundwater monitoring Water Wells (WW)-4 and WW-5 were scheduled for conversion from Westbay to purgeable sampling systems by February 29 and March 31, 2016, respectively (NASA, 2012a, 2012b). On February 24, 2014, NASA requested a revision of the well conversion schedule due to unforeseen conditions that impacted the conversion of previously scheduled monitoring wells. As a result, NASA proposed advancing the WW-4 and WW-5 conversion schedules to October 31, 2015 (NASA, 2014). NMED approved the request on March 7, 2014 (NMED, 2014). Due to delays with the sampling system subcontractor, an extension was requested on October 29, 2015 (NASA, 2015b). This extension was approved by NMED on December 2, 2015 (NMED, 2015). In that approval, NMED required that WW-4 and WW-5 be reconfigured by January 31, 2016 and that a reconfiguration report be submitted no later than March 31, 2016.

This report provides a summary of field activities associated with the reconfiguration of monitoring wells WW-4 and WW-5 from non-purgeable multiport Westbay sampling systems to purgeable sampling systems. Field activities were performed between September 23, 2015 and January 26, 2016, and included removing and disposing of the Westbay casing, redeveloping the screened intervals in the conventional polyvinyl chloride (PVC) casings, backfilling the sump in each conventional casing with 6/9 sand, video logging the conventional well casings, installing a purgeable Water Flexible Liner Underground Technologies, LLC (FLUTe™[2]) sampling system within each PVC casing, and collecting the first set of groundwater samples from each of the four sampling zones in the two wells.

2.0 Well Background

Wells WW-4 and WW-5 are located in the WSTF 600 Area in Section 31, Township 20 South, Range 03 East (Figure 2.1). The wells were installed as part of a groundwater monitoring well network at WSTF to identify the horizontal and vertical extent of a groundwater contamination plume consisting of trichloroethene, N-nitrosodimethylamine (NDMA), and several Freon®[3] compounds.

The WW-4 and WW-5 boreholes were drilled using mud rotary drilling methods to a total depth of approximately 1,020 ft below ground surface (bgs) between March 2001 (WW-4) and September 2001 (WW-5). The wells were competed with PVC conventional casing and 0.020-slot screens. The Westbay

[1] Westbay is a registered trademark of Nova Metrix LLC.
[2] FLUTe is a registered trademark of Flexible Liner Underground Technologies, LLC.
[3] The trade name Freon is a registered trademark of E.I. du Pont de Nemours & Company Corporation (DuPont).

well casing was retrofit within the outer PVC casing and screen. Casing installation information for wells WW-4 and WW-5 is presented below.

2.1 Well WW-4:

- Nominal 5-inch (in.) [4.75-in. inside diameter (ID)] Schedule 80 PVC casing
- Screen 1: 419-429 ft bgs
- Screen 2: 589-599 ft bgs
- Screen 3: 848-858 ft bgs
- Screen 4: 948-958 ft bgs
- Total depth of conventional casing: 988.5 ft bgs
- Westbay sampling zone 1: 413-433 ft bgs with measurement port at 423 ft bgs
- Westbay sampling zone 2: 584-603 ft bgs with measurement port at 593 ft bgs
- Westbay sampling zone 3: 843-862 ft bgs with measurement port at 853 ft bgs
- Westbay sampling zone 4: 943-963 ft bgs with measurement port at 953 ft bgs
- Total depth of original 2.25-in. ID Westbay PVC casing : 978 ft bgs
- Depth to water in the borehole was approximately 382 ft. bgs (during initial conventional casing development) within alluvium

2.2 Well WW-5:

- Nominal 5-in. (4.75-in. ID) Schedule 80 PVC casing
- Screen 1: 459-469 ft bgs
- Screen 2: 579-589 ft bgs
- Screen 3: 809-819 ft bgs
- Screen 4: 909-919 ft bgs
- Total depth of conventional casing: 949 ft bgs
- Westbay sampling zone 1: 454-474 ft bgs with measurement port at 464 ft bgs
- Westbay sampling zone 2: 577-592 ft bgs with measurement port at 582 ft bgs
- Westbay sampling zone 3: 804-823 ft bgs with measurement port at 813 ft bgs
- Westbay sampling zone 4: 907-922 ft bgs with measurement port at 912 ft bgs
- Total depth of original 2.25-in. ID Westbay PVC casing : 937 ft bgs
- Depth to water in the borehole was approximately 379 ft bgs (during initial conventional casing development) within alluvium

Figure 2.2 and Figure 2.3 provide the original Westbay monitoring well construction diagrams prior to reconfiguration.

3.0 Well Reconfiguration

Well reconfiguration activities consisted of removing the Westbay system casings and components from the conventional PVC casings, redeveloping the screened intervals in each conventional well by brushing, swabbing, and bailing the conventional wells and pumping each conventional screened zone, performing video logs of each conventional casing, and installing the multi-zone, purgeable Water FLUTe sampling system within each conventional casing.

3.1 Westbay Casing Removal

3.1.1 WW-4

On September 24, 2015, Westbay personnel perforated the uppermost packer of the Westbay casing within well WW-4 in preparation for Westbay casing removal. Westbay personnel completed packer perforation, and the Westbay casing was removed from the PVC conventional casing on September 25, 2015 with the assistance of Yellow Jacket Drilling (YJD). The entire casing was removed with no complications.

3.1.2 WW-5

In preparation for Westbay casing removal, Westbay personnel perforated the casing packers within well WW-5 on September 23, 2015. A pressure profile performed on the well indicated that the packer at 600 ft bgs was not perforated. On September 24, 2015, the remaining packer was perforated and the Westbay casing was removed from the conventional PVC casing by YJD without complications.

3.1.3 Casing Disposal

Following removal, the Westbay casing from both WW-4 and WW-5 was cut into short sections of approximately 3 ft in length and packaged for off-site disposal. Because WW-4 and WW-5 are not located within the groundwater contaminant plume, casing removed from the wells was characterized as non-hazardous and disposed of as solid waste.

3.2 Redevelopment of Conventional Casing

3.2.1 Well WW-4

Well WW-4 redevelopment began September 29, 2015 and was completed on October 2, 2015. The PVC conventional well was developed by brushing, swabbing, and bailing on September 29. On September 30, 2015, YJD installed a pump within the PVC conventional casing. Each of the four conventional screened intervals was purged. A total of 8,667 gallons (gal) was pumped from WW-4 during re-development activities. Development Data sheets for WW-4 are provided in Appendix A of this report.

3.2.2 Well WW-5

Well WW-5 redevelopment began September 26, 2015 and was completed on September 29, 2015. The PVC conventional well was brushed, swabbed, and bailed on September 26. On September 27, 2015, YJD installed a pump within the PVC conventional casing. A total of 5,870 gal was re-developed from the four well screens in WW-5 (Appendix A).

3.3 PVC Conventional Casing Sump Backfilling

The sump below the bottom PVC conventional well screen in both WW-4 and WW-5 was backfilled with 6/9 Colorado silica sand to provide additional support for the Water FLUTe liner. The sand was emplaced by gravity feed from the surface. For WW-4, six and one half bags of sand were installed from the conventional casing total depth to approximately 958 ft bgs. At WW-5, six bags of sand were emplaced to approximately 920 ft bgs.

3.4 Video Logging

Video camera logs of the conventional PVC casings in wells WW-4 and WW-5 were performed to inspect and document each well's condition prior to Water FLUTe system installation. The WW-5 video log was conducted on November 4, 2015 and the WW-4 log was conducted on November 9, 2015. Clear groundwater was observed throughout the screened intervals of both wells and no anomalies were noted.

3.5 Sampling System Installation

Purgeable multiport sampling systems manufactured by FLUTe were installed in conventional PVC wells WW-4 and WW-5 on November 9 and November 10, 2015, respectively. The Water FLUTe sampling zones correspond to the conventional PVC casing screened zones for each well. The new system zones and depths to groundwater are listed below.

3.5.1 Well WW-4

Water FLUTe sampling zones:

- 419-429 ft bgs
- 589-599 ft bgs
- 848-858 ft bgs
- 948-958 ft bgs
- Depth to groundwater: 396.92 ft bgs

Figure 3.1 provides the reconfigured well WW-4 completion diagram with the new sampling system installed.

3.5.2 Well WW-5

Water FLUTe sampling zones:

- 459-469 ft bgs
- 579-589 ft bgs
- 809-819 ft bgs
- 909-919 ft bgs
- Depth to groundwater: 395.71 ft bgs

Figure 3.2 provides the reconfigured well WW-5 completion diagram with the new sampling system installed.

4.0 Sampling and Analysis

Wells WW-4 and WW-5 were sampled using the newly installed Water FLUTe system on December 14-15, 2015 and January 25-26, 2016, respectively. Groundwater samples were collected for analysis of volatile organic compounds, semi-volatile organic compounds, NDMA, bromacil, perchlorate, nitrite/nitrate, anions, and several metals in accordance with the NMED-approved Groundwater Monitoring Plan (NASA, 2015a). Groundwater samples were shipped off site for analysis at the contracted analytical laboratories. Chemical analytical data were received, verified, and validated in accordance with established NASA procedures, and archived in the permanent analytical database at WSTF. Analytes detected in samples collected during the first sampling event for WW-4 and WW-5 with the Water FLUTe system are presented in Table 6.1 and Table 6.2, respectively.

All chemical analytical data from the first FLUTe sampling events at WW-4 and WW-5 are provided in Appendix B. Several compounds were tentatively identified in these first samples. These analytes are included in Appendix B, but not in Table 6.1 and Table 6.2.

5.0 Survey Information

The location and elevation of the WW-4 and WW-5 monitoring wells were surveyed by a registered land surveyor in 2011 as part of a project to survey new groundwater monitoring wells and resurvey all existing WSTF monitoring wells. Using New Mexico State Plane (Central Zone) NAD 83, surveyed coordinates were:

- WW-4: Northing 554,772.88 ft and Easting 1,512,065.14 ft, with a brass cap elevation of 4,443.19 ft above mean sea level (amsl)
- WW-5: Northing 557,042.74 ft and Easting 1,512,073.89 ft, with a brass cap elevation of 4,444.59 ft amsl

NASA anticipates that WW-4 and WW-5 will be resurveyed in conjunction with a future surveying project; however, the results of that survey are not expected to differ significantly from these well location coordinates and elevations.

6.0 Deviations From Work Plan

The following are deviations from the Westbay Well Conversion Work Plan, dated June 26, 2012:

- Wells WW-4 and WW-5 were completed with a multi-zone sampling system designed and manufactured by FLUTe. A copy of the Well Completion Diagram for Well WW-4 and WW-5 are provided in Figure 2.2 and Figure 2.3, respectively.

7.0 Waste Management

All investigation-derived waste (IDW) was managed in accordance with applicable federal, state, and local regulations and WSTF policy. Because WW-4 and WW-5 are not located within the WSTF groundwater contaminant plume, Westbay well casing removed from the wells was cut into manageable lengths (approximately 3 ft) and placed in bulk bags (Super Sacks) for shipment off-site and disposal as solid waste at a permitted facility. Groundwater generated during redevelopment of the two wells was discharged to grade at a location that would not allow the flow to leave NASA-controlled property.

WSTF procedures require that all sampling IDW be managed as potentially hazardous waste. Therefore, even though wells WW-4 and WW-5 are located outside the WSTF groundwater contaminant plume,

groundwater generated during sampling activities was collected in carboys, transferred daily to an established less than 90-day storage area, and then transported to the Mid-plume Interception and Treatment System for treatment and discharge in accordance with the Groundwater Monitoring Plan (NASA, 2015a). Debris (gloves, wipes, etc.) from all monitoring well sampling activities at WSTF is also collected and managed as potentially hazardous waste. For this reason, the debris from WW-4 and WW-5 sampling was bagged and placed in an existing 90-day storage area prior to shipment for disposal at a permitted off-site facility.

8.0 References

NASA Johnson Space Center White Sands Test Facility. (2010, November 19). *Westbay Well Evaluation Work Plan*. Las Cruces, NM.

NASA Johnson Space Center White Sands Test Facility. (2011, October 20). *NASA WSTF Westbay Well Evaluation Investigation Report*. Las Cruces, NM.

NASA Johnson Space Center White Sands Test Facility. (2012a, June 28). *Schedule for Conversion of Westbay Wells*. Las Cruces, NM.

NASA Johnson Space Center White Sands Test Facility. (2012b, November 1). *Westbay Well Conversion Work Plan*. Las Cruces, NM.

NASA Johnson Space Center White Sands Test Facility. (2014, February 24). *Request for Revised Westbay Well Conversion Schedule*. Las Cruces, NM.

NASA Johnson Space Center White Sands Test Facility. (2015a, April 29). *NASA WSTF Groundwater Monitoring Plan Update for 2015.* Las Cruces, NM.

NASA Johnson Space Center White Sands Test Facility. (2015b, October 29). *Request for Extension of Time for Conversion of Westbay Wells BLM-28, WW-4, and WW-5.* Las Cruces, NM.

NMED Hazardous Waste Bureau. (2010, June 25). *National Aeronautics and Space Administration (NASA) Johnson Space Center (JSC) White Sands Test Facility (WSTF) Quarterly Groundwater Monitoring Fourth Quarter 2009 EPA ID# NM8800019434 HWB-NASA-10-001*. Santa Fe, NM.

NMED Hazardous Waste Bureau. (2011, December 16). *Approval with Modifications Investigation Report for Evaluating the Representativeness of Groundwater Samples Collected from Westbay Wells.* Santa Fe, NM.

NMED Hazardous Waste Bureau. (2013, January 16). *Approval Westbay Well Conversion Work Plan*. Santa Fe, NM.

NMED Hazardous Waste Bureau. (2014 March 7). *Approval Extension Request Revised Westbay Well Conversion Schedule National Aeronautics Space Administration (NASA) Johnson Space Center (JSC) White Sands Test Facility (WSTF) Doña Ana County, New Mexico EPA ID #NM08800019434.* Santa Fe, NM.

NMED Hazardous Waste Bureau. (2015, December 2). *Approval Request for Extension of Time for Conversion of Westbay Wells BLM-28, WW-4, and WW-5.* Santa Fe, NM.

Figures

Figure 2.1 **WW-4 and WW-5 Location Map**

(SEE NEXT PAGE)

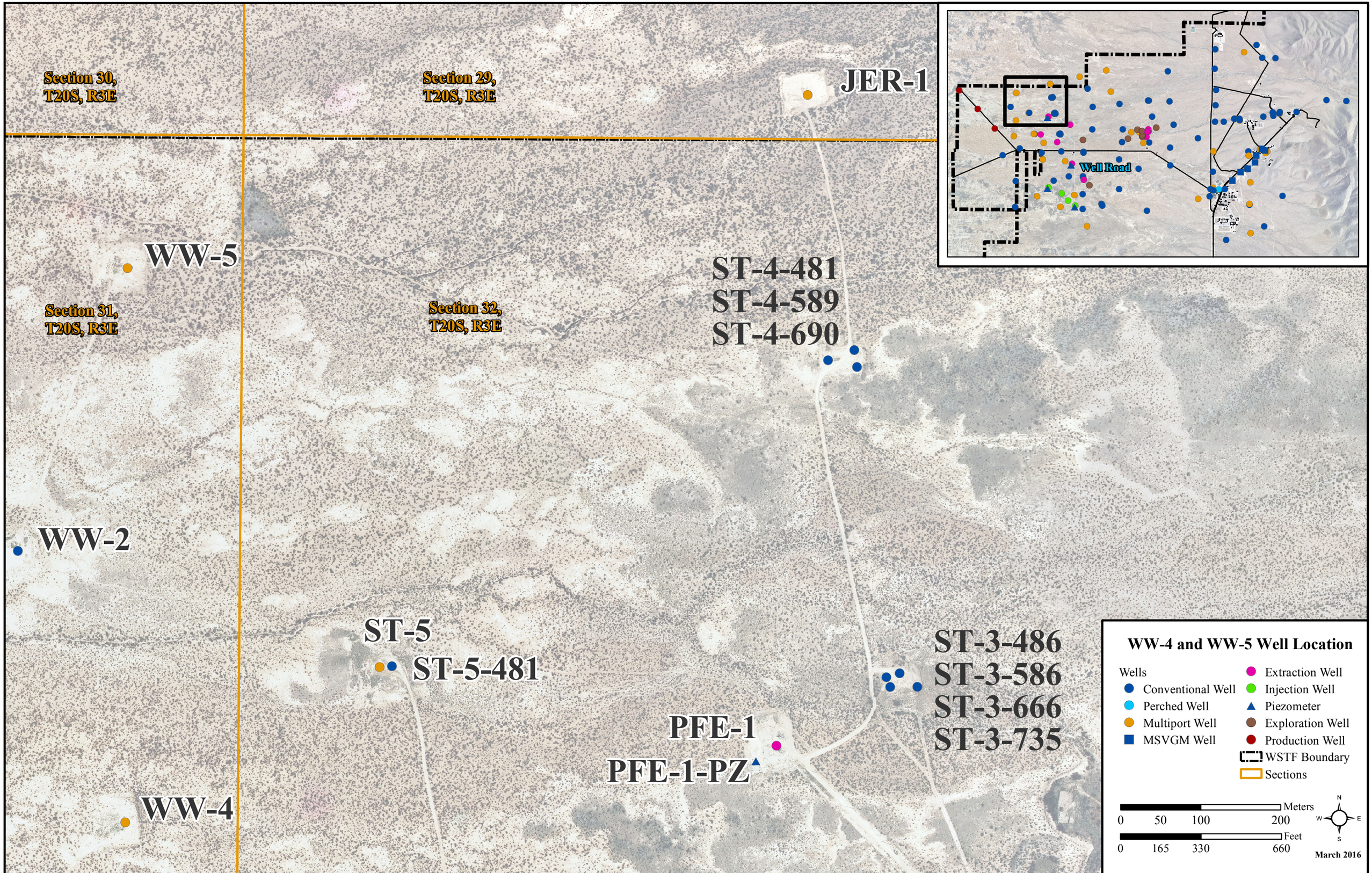
Section 30,
T20S, R3E
Section 29,
T20S, R3E
JER-1
Well Road
WW-5
Section 31,
T20S, R3E
Section 32,
T20S, R3E
ST-4-481
ST-4-589
ST-4-690
WW-2
ST-5
ST-5-481
ST-3-486
ST-3-586
ST-3-666
ST-3-735
PFE-1
PFE-1-PZ
WW-4
WW-4 and WW-5 Well Location
Wells
Conventional Well
Perched Well
Multiport Well
MSVGM Well
Extraction Well
Injection Well
Piezometer
Exploration Well
Production Well
WSTF Boundary
Sections
Meters
0 50 100 200
Feet
0 165 330 660
N
W
E
S
March 2016

Figure 2.2 WW-4 Original Westbay Well Completion Diagram

(SEE NEXT PAGE)

WELL COMPLETION DIAGRAM

RETROFIT WESTBAY® MONITORING WELL

JSC - White Sands Test Facility
Las Cruces, New Mexico, USA

Location ID: **WW-4**

Site ID: **NASA-WSTF, Doña Ana County, NM**

Township and Range: **NE 1/4 NE 1/4 SE 1/4 Sec. 31, T20S, R3E**
NM State Plane Coordinates (NAD 83 in meters) **169094.61N 460877.94E**
Elevation (Brass Cap): **1354.33 m AMSL**
Elevation (Top of Casing): **1354.89 m AMSL**
Drilling Contractor: **Stewart Brothers Drilling Company**
Driller: **D. Gaddy** **WB Rep.: D. Mercer**
Total Depth of Borehole (bgs): **1,020' (310.90 m)**
Borehole Diameter: **17 1/2 (117'); 12 1/4 (117-1,020')**
Depth to Bedrock (bgs): **Not Reached**
Depth to Groundwater: **~382' (116.43 m) (5/2/01)**
Total Depth Surface Casing (bgs): **117' (35.66 m)**
Diameter and Type Surface Casing: **13 1/2" ID; 14" OD CarbonSteel**
Date(s) Well Installed: **CW = 3/28/01 - 4/18/01; WB = 4/30/01 - 5/3/01**
Date(s) Well Developed: **CW = 4/18/01 - 4/25/01; WB = Not Recorded**

Field Representative(s): **M. Canavan, G. Giles, J. Pearson, (see comments)**
Total Depth Well Casing(s) (bgs): **CW: 988.51' (301.30 m) WB: 978.18' (298.18 m)**
Type of Casing(s): **PVC: Conventional Well (CW) and Westbay® Well (WB)**
Diameter Well Casing(s): **CW = 4.75" ID/ 5.5" OD; WB = 2.25" ID/ 2.9" OD**
Casing Schedule: **CW = 80 / WB = MP55**
CW Screened Zone(s) (bgs): **418.75-428.75' (127.64-130.68 m); 588.54-598.54' (179.39-182.43m); 848.30-858.30' (258.56-261.61 m); 948.19-958.19' (289.01-292.06 m)**
WB Sampling Zone(s) (bgs): **422.85' (128.88 m); 593.44' (180.88 m); 852.62' (259.88 m); 952.68' (290.38 m)**
WB Packer Zone(s) (bgs): **413.01-432.69' (125.89-131.94 m); 583.60-603.28' (177.88-183.88m); 842.77-862.46' (256.88-262.88m); 942.83-962.52' (287.37-293.38 m)**
Comments: **Field Reps. cont'd: L. Hunnicutt-Mack, M. Stepro, R. Weaver**

Casing Explanation:

- Surface Casing **14" OD Steel**
- Conventional Casing **4.75" ID Schedule 80 PVC**
- Conventional Screen **4.75" ID Schedule 80 PVC 0.020"-slot**
- Conventional End Cap **4.75" ID Schedule 80 PVC**
- **Bolted Steel Centralizers**
- Water Table
- **2.25" ID MP55 Casing**
- **2.25" ID MP55 End Cap**
- Measurement Port (MP)
- MP with Filter Sock
- Mechanical Pumping Port (PP)
- Magnetic Collar
- Packer

Annular Materials Explanation:

- Cement
- Bentonite (Grout Well DF)
- Bentonite Seal
- 10/20 Sand/ Bentonite Mix
- Slough
- 1/8 Gravel
- 4/8 Sand
- 6/9 Sand
- 8/12 Sand
- 8/20 Sand
- 10/20 Sand
- 16/40 Sand
- 20/40 Sand
- 30/70 Sand

Feet/Meters

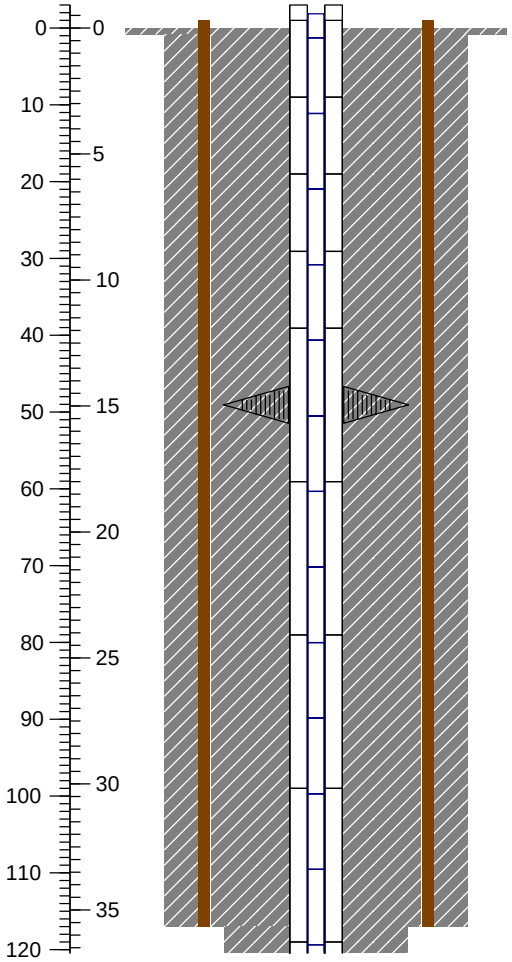

Well Descriptions
All depths listed are bgs (unless noted)

Westbay® Well Stick-Up = ~1.86' (0.568 m)
Conventional Well Stick-Up = ~1.0' (~0.3 m) (Exact Stick-Up Not Measured)

Surface Casing Stick-Up = ~1' (~0.3 m) (Exact Stick-Up Not Measured)
Well completed with ~3' x ~3' cement pad, barrier posts, and locking steel well cap surrounding the casings above ground surface.

Stainless steel bolted cage centralizer attached to casing at ~49.1' (~15.0 m)

14" OD Steel Surface Casing Depth = 117' (35.66 m)

Annular/Borehole Descriptions
All depths listed are bgs

Top of Cement Grout (Portland II Cement with 5% Bentonite) = 0'

Comments continued: bgs = below ground surface; TOC = Top of Casing

Geologic Formation = Santa Fe Group Alluvium 0 - 580' (0 - 176.8 m)

17 1/2" Borehole Cemented to 117' (35.7 m)

Casing Explanation:

- Surface Casing — **14" OD Steel**
- Conventional Casing — **4.75" ID Schedule 80 PVC**
- Conventional Screen — **4.75" ID Schedule 80 PVC 0.020"-slot**
- Conventional End Cap — **4.75" ID Schedule 80 PVC**
- **Bolted Steel Centralizers**
- Water Table
- **2.25" ID MP55 Casing**
- **2.25" ID MP55 End Cap**
- Measurement Port (MP)
- MP with Filter Sock
- Mechanical Pumping Port (PP)
- Magnetic Collar
- Packer

Annular Materials Explanation:

- Cement
- Bentonite (Grout Well DF)
- Bentonite Seal
- 10/20 Sand/ Bentonite Mix
- Slough
- 1/8 Gravel
- 4/8 Sand
- 6/9 Sand
- 8/12 Sand
- 8/20 Sand
- 10/20 Sand
- 16/40 Sand
- 20/40 Sand
- 30/70 Sand

Feet/Meters

Well Descriptions
All depths listed are bgs (unless noted)

Annular/Borehole Descriptions
All depths listed are bgs

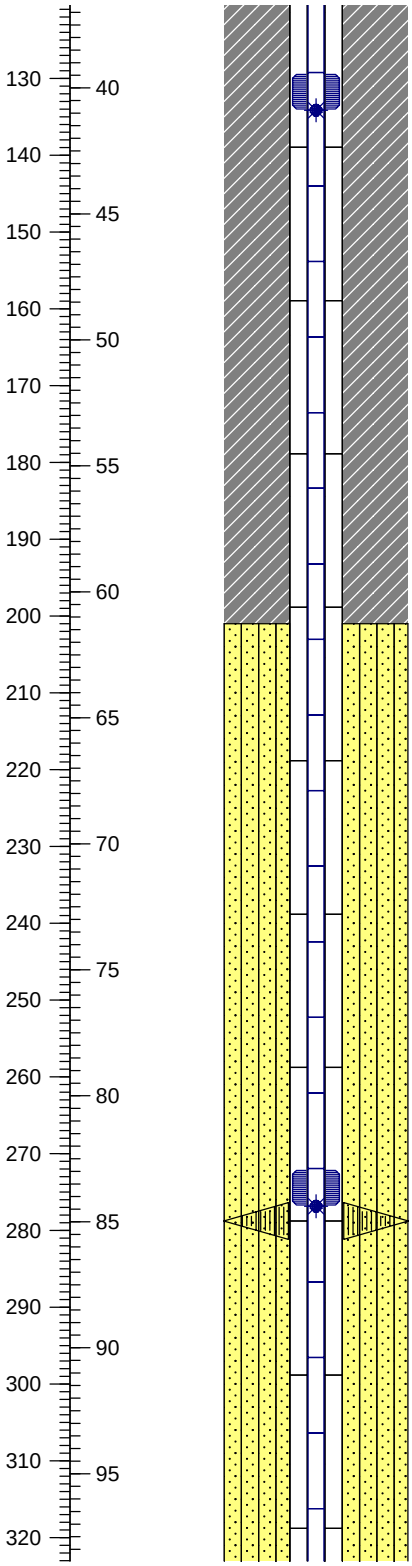

Stabilizing Packer Depth=129.23 - 134.15' (39.39 - 40.89 m)

MP Depth (with Filter Sock) = 134.15' (40.89 m)

Top of 10/20 Sand/Bentonite Mix = 201' (61.3 m)

Stabilizing Packer Depth=271.94 - 276.86' (82.89 - 84.39 m)

MP Depth (with Filter Sock) = 276.86' (84.39 m)

Stainless steel bolted cage centralizer attached to casing at ~278.8' (~85.0 m)

Casing Explanation:

- Surface Casing — **14" OD Steel**
- Conventional Casing — **4.75" ID Schedule 80 PVC**
- Conventional Screen — **4.75" ID Schedule 80 PVC 0.020"-slot**
- Conventional End Cap — **4.75" ID Schedule 80 PVC**
- **Bolted Steel Centralizers**
- Water Table
- **2.25" ID MP55 Casing**
- **2.25" ID MP55 End Cap**
- Measurement Port (MP)
- MP with Filter Sock
- Mechanical Pumping Port (PP)
- Magnetic Collar
- Packer

Annular Materials Explanation:

- Cement
- Bentonite (Grout Well DF)
- Bentonite Seal
- 10/20 Sand/ Bentonite Mix
- Slough
- 1/8 Gravel
- 4/8 Sand
- 6/9 Sand
- 8/12 Sand
- 8/20 Sand
- 10/20 Sand
- 16/40 Sand
- 20/40 Sand
- 30/70 Sand

Feet/Meters

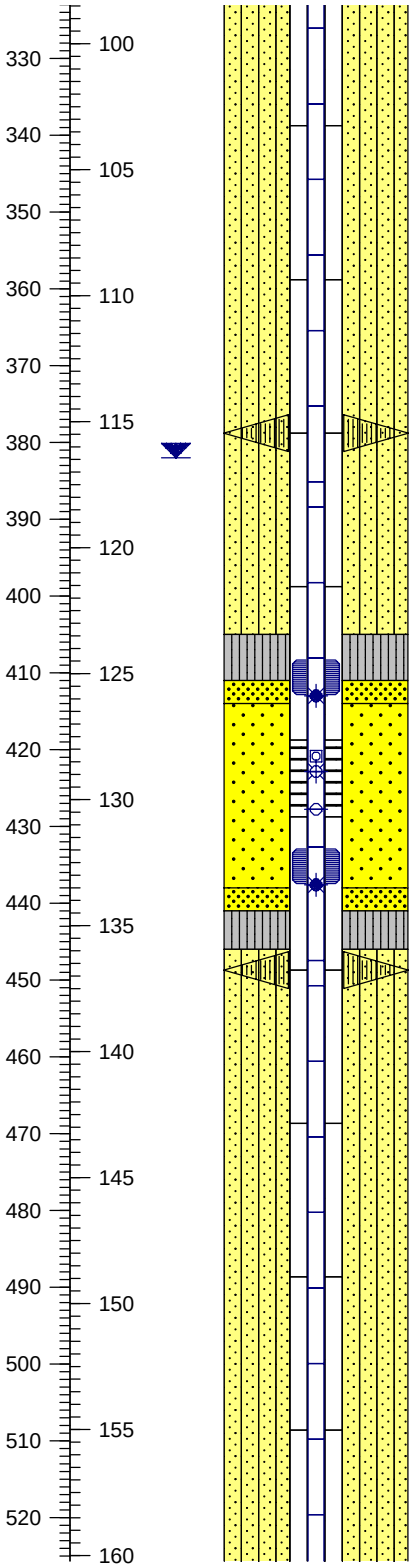

Well Descriptions
All depths listed are bgs (unless noted)

Stainless steel bolted cage centralizer attached to casing at ~378.8' (~115.5 m)

Water Table = ~382' (~116.43 m) TOC Measured 5/2/01 during Westbay® well casing installation)

Packer Depth = 408.08 - 413.01' (124.38 - 125.89 m)

MP Depth (with Filter Sock) = 413.01' (125.89 m)

Magnetic Collar Depth = ~420.85' (~128.28 m) (Exact Location Not Recorded)

Top of Conventional Screen = 418.8' (127.65 m)

Sampling MP Depth = 422.85' (128.88 m)

PP Depth = 427.77' (130.38 m)

Bottom of Conventional Screen = 428.8' (130.70 m)

Packer Depth = 432.69 - 437.61' (131.88 - 133.38 m)

MP Depth (with Filter Sock) = 437.61' (133.38 m)

Stainless steel bolted cage centralizer attached to casing at ~448.7' (~136.8 m)

Annular/Borehole Descriptions
All depths listed are bgs

Top of Upper Bentonite Seal = 405' (123.4 m)

Top of Upper 30/70 Sand = 411' (125.3 m)

Top of 10/20 Sand = 414' (126.2 m)

Top of Lower 30/70 Sand = 438' (133.5 m)

Top of Lower Bentonite Seal = 441' (134.4 m)

Top of 10/20 Sand/Bentonite Mix = 446' (135.9 m)

Casing Explanation:

- Surface Casing **14" OD Steel**
- Conventional Casing **4.75" ID Schedule 80 PVC**
- Conventional Screen **4.75" ID Schedule 80 PVC 0.020"-slot**
- Conventional End Cap **4.75" ID Schedule 80 PVC**
- **Bolted Steel Centralizers**
- Water Table
- **2.25" ID MP55 Casing**
- **2.25" ID MP55 End Cap**
- Measurement Port (MP)
- MP with Filter Sock
- Mechanical Pumping Port (PP)
- Magnetic Collar
- Packer

Annular Materials Explanation:

- Cement
- Bentonite (Grout Well DF)
- Bentonite Seal
- 10/20 Sand/ Bentonite Mix
- Slough
- 1/8 Gravel
- 4/8 Sand
- 6/9 Sand
- 8/12 Sand
- 8/20 Sand
- 10/20 Sand
- 16/40 Sand
- 20/40 Sand
- 30/70 Sand

Feet/Meters

Well Descriptions
All depths listed are bgs (unless noted)

Annular/Borehole Descriptions
All depths listed are bgs

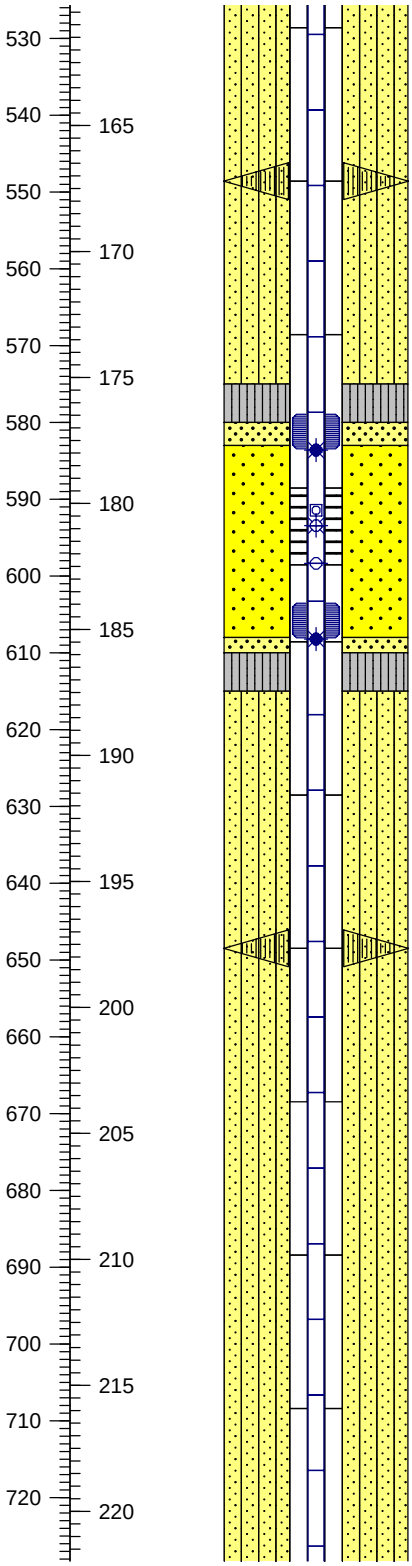

Stainless steel bolted cage centralizer attached to casing at ~548.6' (~167.2 m)

Packer Depth = 578.68 - 583.60' (176.38 - 177.88 m)

MP Depth (with Filter Sock) = 583.60' (177.88 m)

Magnetic Collar Depth = ~591.44' (~180.27 m) (Exact Location Not Recorded)

Top of Conventional Screen = 588.5' (179.37 m)

Sampling MP Depth = 593.44' (180.88 m)

PP Depth = 598.36' (182.38 m)

Bottom of Conventional Screen = 598.5' (182.42 m)

Packer Depth = 603.28 - 608.21' (183.88 - 185.38 m)

MP Depth (with Filter Sock) = 608.21' (185.38 m)

Stainless steel bolted cage centralizer attached to casing at ~648.5' (~197.7 m)

Geologic Formation = Volcanic-Rich Santa Fe Group Alluvium 580 - 1,020' (176.8 - 310.9 m)

Top of Upper Bentonite Seal = 575' (175.3 m)

Top of Upper 20/40 Sand = ~580' (~176.8 m) (Exact Location Not Measured)

Top of 10/20 Sand = ~583' (~177.7 m) (Exact Location Not Measured)

Top of Lower 20/40 Sand = 608' (185.3 m)

Top of Lower Bentonite Seal = 610' (185.9 m)

Top of 10/20 Sand/Bentonite Mix = 615' (187.5 m)

Casing Explanation:

- Surface Casing
- **14" OD Steel**
- Conventional Casing
- **4.75" ID Schedule 80 PVC**
- Conventional Screen
- **4.75" ID Schedule 80 PVC**
- **0.020"-slot**
- Conventional End Cap
- **4.75" ID Schedule 80 PVC**
- **Bolted Steel Centralizers**
- Water Table
- **2.25" ID MP55 Casing**
- **2.25" ID MP55 End Cap**
- Measurement Port (MP)
- MP with Filter Sock
- Mechanical Pumping Port (PP)
- Magnetic Collar
- Packer

Annular Materials Explanation:

- Cement
- Bentonite (Grout Well DF)
- Bentonite Seal
- 10/20 Sand/ Bentonite Mix
- Slough
- 1/8 Gravel
- 4/8 Sand
- 6/9 Sand
- 8/12 Sand
- 8/20 Sand
- 10/20 Sand
- 16/40 Sand
- 20/40 Sand
- 30/70 Sand

Feet/Meters

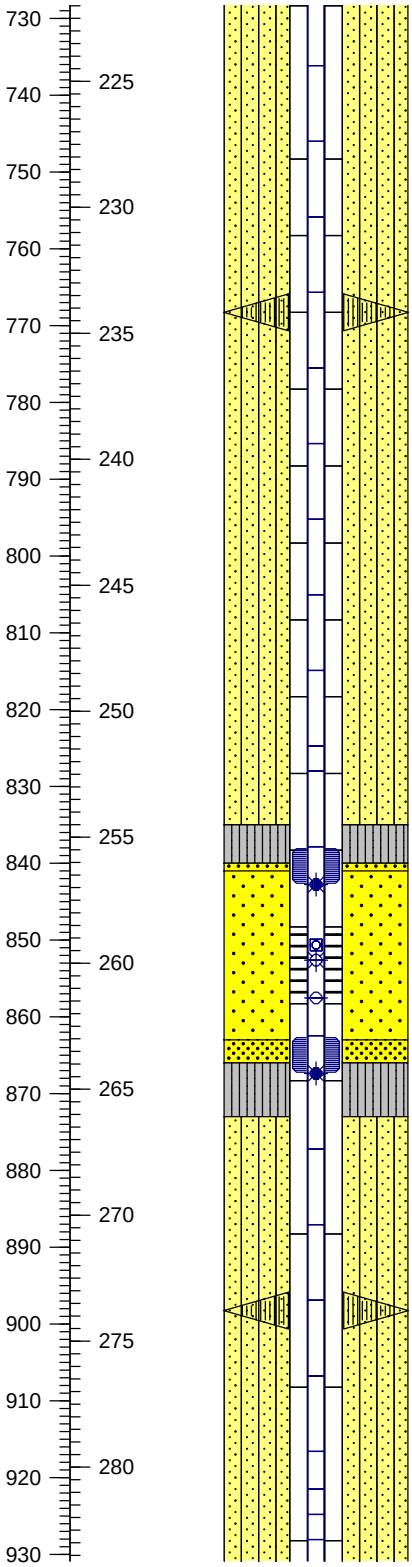

Well Descriptions
All depths listed are bgs (unless noted)

Stainless steel bolted cage centralizer attached to casing at ~768.3' (~234.2 m)

Packer Depth = 837.85 - 842.77' (255.38 - 256.88 m)

MP Depth (with Filter Sock) = 842.77' (256.88 m)

Magnetic Collar Depth = ~850.62' (~259.27 m) (Exact Location Not Recorded)

Top of Conventional Screen = 848.3' (258.56 m)

Sampling MP Depth = 852.62' (259.88 m)

PP Depth = 857.54' (261.38 m)

Bottom of Conventional Screen = 858.3' (261.61 m)

Packer Depth = 862.46 - 867.38' (262.88 - 264.38 m)

MP Depth (with Filter Sock) = 867.38' (264.38 m)

Stainless steel bolted cage centralizer attached to casing at ~898.3' (~273.8 m)

Annular/Borehole Descriptions
All depths listed are bgs

Top of Upper Bentonite Seal = 835' (254.5 m)

Top of Upper 30/70 Sand = 840' (256.0 m)

Top of 10/20 Sand = 841' (256.3 m)

Top of Lower 30/70 Sand = 863' (263.0 m)

Top of Lower Bentonite Seal = 866' (264.0 m)

Top of 10/20 Sand/Bentonite Mix = 873' (266.1 m)

Casing Explanation:

- Surface Casing
- **14" OD Steel**
- Conventional Casing
- **4.75" ID Schedule 80 PVC**
- Conventional Screen
- **4.75" ID Schedule 80 PVC**
- **0.020"-slot**
- Conventional End Cap
- **4.75" ID Schedule 80 PVC**
- **Bolted Steel Centralizers**
- Water Table
- **2.25" ID MP55 Casing**
- **2.25" ID MP55 End Cap**
- Measurement Port (MP)
- MP with Filter Sock
- Mechanical Pumping Port (PP)
- Magnetic Collar
- Packer

Annular Materials Explanation:

- Cement
- Bentonite (Grout Well DF)
- Bentonite Seal
- 10/20 Sand/ Bentonite Mix
- Slough
- 1/8 Gravel
- 4/8 Sand
- 6/9 Sand
- 8/12 Sand
- 8/20 Sand
- 10/20 Sand
- 16/40 Sand
- 20/40 Sand
- 30/70 Sand

Feet/Meters

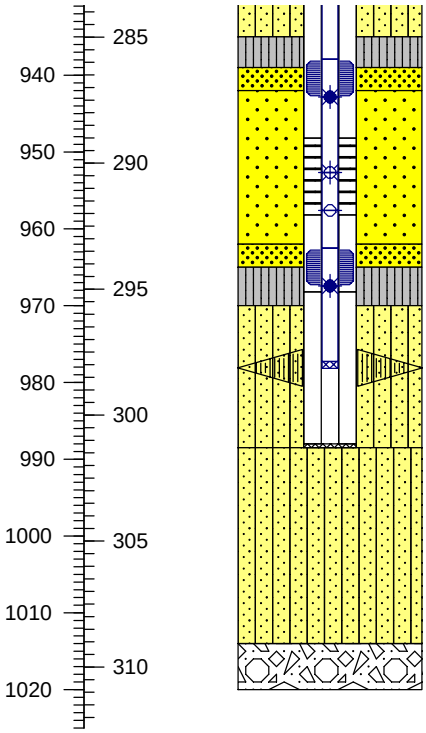

Well Descriptions
All depths listed are bgs (unless noted)

Packer Depth = 937.91 - 942.83' (285.87 - 287.37 m)

MP Depth (with Filter Sock) = 942.83' (287.37 m)

Magnetic Collar Depth = ~949.0' (~289.25 m) (Exact Location Not Recorded)

Top of Conventional Screen = 948.2' (289.01 m)
Sampling MP Depth = 952.68' (290.38 m)
PP Depth = 957.60' (291.88 m)

Bottom of Conventional Screen = 958.2' (292.06 m)

Packer Depth = 962.52 - 967.44' (293.38 - 294.88 m)

MP Depth (with Filter Sock) = 967.44' (294.88 m)

Westbay® MP 55 Casing TD = 978.18' (298.15 m)

Conventional 4" 304 Stainless Steel Well TD = 988.51' (301.30 m)

Annular/Borehole Descriptions
All depths listed are bgs

Top of Upper Bentonite Seal = 935' (285.0 m)

Top of Upper 30/70 Sand = 939' (286.2 m)

Top of 10/20 Sand = 942' (287.1 m)

Top of Lower 30/70 Sand = 962' (293.2 m)

Top of Lower Bentonite Seal = 965' (294.1 m)

Top of 10/20 Sand/Bentonite Mix = 970' (295.7 m)

Top of Slough = 1,014' (309.07 m)

12 1/4" Borehole TD = 1,020' (310.90 m)

Figure 2.3 WW-5 Original Westbay Well Completion Diagram

(SEE NEXT PAGE)

WELL COMPLETION DIAGRAM

RETROFIT WESTBAY® MONITORING WELL

JSC - White Sands Test Facility
Las Cruces, New Mexico, USA

Location ID: **WW-5**

Site ID: **NASA-WSTF, Doña Ana County, NM**

Township and Range: **NE 1/4 NE 1/4 NE 1/4 Sec. 31, T20S, R3E**
NM State Plane Coordinates (NAD 83 in meters) **169786.96N 460880.90E**
Elevation (Brass Cap): **1354.70 m AMSL**
Elevation (Top of Casing): **1355.29 m AMSL**
Drilling Contractor: **Stewart Brothers Drilling Company**
Driller: **G. Cardenas** **WB Rep.: D. Mercer**
Total Depth of Borehole (bgs): **1,020' (310.90 m)**
Borehole Diameter: **17 1/2 (0-116'); 12 1/4 (116-1,020')**
Depth to Bedrock (bgs): **Not Reached**
Depth to Groundwater: **379.02' (115.53 m) TOC (10/17/01)**
Total Depth Surface Casing (bgs): **111' (33.83 m)**
Diameter and Type Surface Casing: **13 1/2" ID; 14" OD Steel**
Date(s) Well Installed: **CW = 9/20/01 - 9/27/01; WB = 10/16/01 - 10/18/01**
Date(s) Well Developed: **CW = 9/27/01 - 10/6/01; WB = Not Recorded**

Field Representative(s): **M. Canavan, G. Giles, J. Pearson, (see comments)**
Total Depth Well Casing(s) (bgs): **CW: 949.37' (289.37 m) WB: 937.38' (285.71 m)**
Type of Casing(s): **PVC: Conventional Well (CW) WB = Westbay® Well (WB)**
Diameter Well Casing(s): **CW = 4.75" ID/ 5.5" OD; WB = 2.25" ID/ 2.9" OD**
Casing Schedule: **CW = 80 (CW = Conventional Well WB = Westbay® Well)**
CW Screened Zone(s) (bgs): **459.18 - 469.17' (139.96 - 143.00 m); 579.16 - 589.13 (176.53 - 179.57 m); 809.08-819.07' (246.61 - 249.65 m); 909.07-919.07' (277.08-280.13 m)**
WB Sampling Zone(s) (bgs): **464.07' (141.45 m); 582.17' (177.45 m); 813.46' (247.94 m); 911.88' (277.94 m)**
WB Packer Zone(s) (bgs): **454.23 - 473.91' (138.45 - 144.45 m); 577.25-592.01' (175.95 - 180.44 m); 803.62 - 823.30' (244.94-250.94 m); 906.96 - 921.72' (276.44 - 280.94 m)**
Comments: **Field Reps, cont'd: L. Hunnicutt-Mack, M. Stepro, R. Weaver**

Casing Explanation:

- Surface Casing **14" OD Steel**
- Conventional Casing **4.75" ID Schedule 80 PVC**
- Conventional Screen **4.75" ID Schedule 80 PVC 0.020"-slot**
- Conventional End Cap **4.75" ID Schedule 80 PVC**
- **Bolted Steel Centralizers**
- Water Table
- **2.25" ID MP55 Casing**
- **2.25" ID MP55 End Cap**
- Measurement Port (MP)
- MP with Filter Sock
- Mechanical Pumping Port (PP)
- Magnetic Collar
- Packer

Annular Materials Explanation:

- Cement
- Bentonite (Grout Well DF)
- Bentonite Seal
- 10/20 Sand/ Bentonite Mix
- Slough
- 1/8 Gravel
- 4/8 Sand
- 6/9 Sand
- 8/12 Sand
- 8/20 Sand
- 10/20 Sand
- 16/40 Sand
- 20/40 Sand
- 30/70 Sand

Feet/Meters

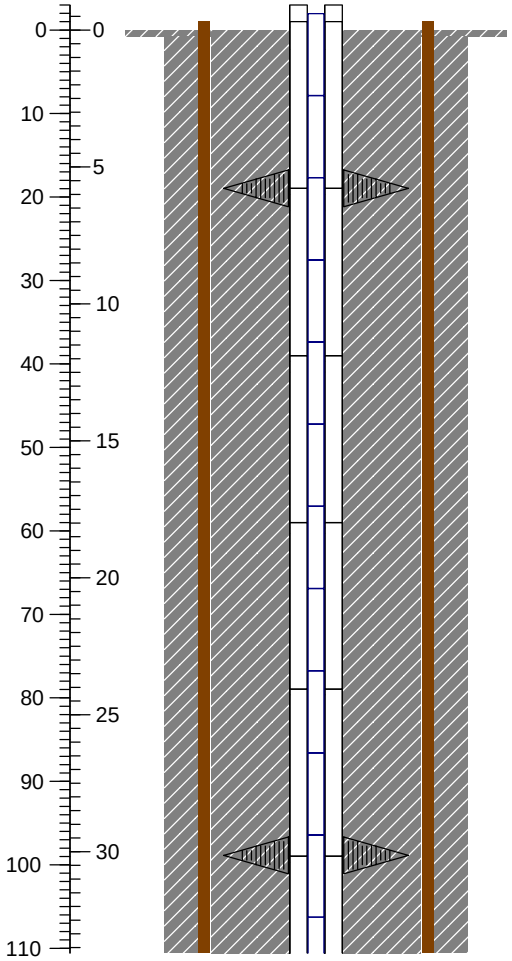

Well Descriptions
All depths listed are bgs (unless noted)

Westbay® Well Stick-Up = ~1.96' (0.597 m)
Conventional Well Stick-Up = ~1.0' (~0.3 m) (Exact Stick-Up Not Measured or Surveyed)

Surface Casing Stick-Up = ~1' (~0.3 m) (Exact Stick-Up Not Measured or Surveyed)

Westbay® well casing is a combination of 300 and 600 Series casing.

Stainless steel bolted cage centralizer attached to casing at ~19.0' (~5.8 m)

Well completed with ~3' x ~3' cement pad, barrier posts, and locking steel well cap surrounding the casings above ground surface.

Stainless steel bolted cage centralizer attached to casing at ~99.0' (~30.2 m)

Annular/Borehole Descriptions
All depths listed are bgs

Top of Cement Grout (Portland II Cement with 5% Bentonite) = 0'

Comments continued: bgs = below ground surface; TOC = Top of Casing; Depths (meters) for WB components and zones are based on installation diagrams.

Geologic Formation = Santa Fe Group Alluvium 0 - 520' (0 - 158.50 m)

Casing Explanation:

- Surface Casing — **14" OD Steel**
- Conventional Casing — **4.75" ID Schedule 80 PVC**
- Conventional Screen — **4.75" ID Schedule 80 PVC 0.020"-slot**
- Conventional End Cap — **4.75" ID Schedule 80 PVC**
- **Bolted Steel Centralizers**
- Water Table
- **2.25" ID MP55 Casing**
- **2.25" ID MP55 End Cap**
- Measurement Port (MP)
- MP with Filter Sock
- Mechanical Pumping Port (PP)
- Magnetic Collar
- Packer

Annular Materials Explanation:

- Cement
- Bentonite (Grout Well DF)
- Bentonite Seal
- 10/20 Sand/ Bentonite Mix
- Slough
- 1/8 Gravel
- 4/8 Sand
- 6/9 Sand
- 8/12 Sand
- 8/20 Sand
- 10/20 Sand
- 16/40 Sand
- 20/40 Sand
- 30/70 Sand

Feet/Meters

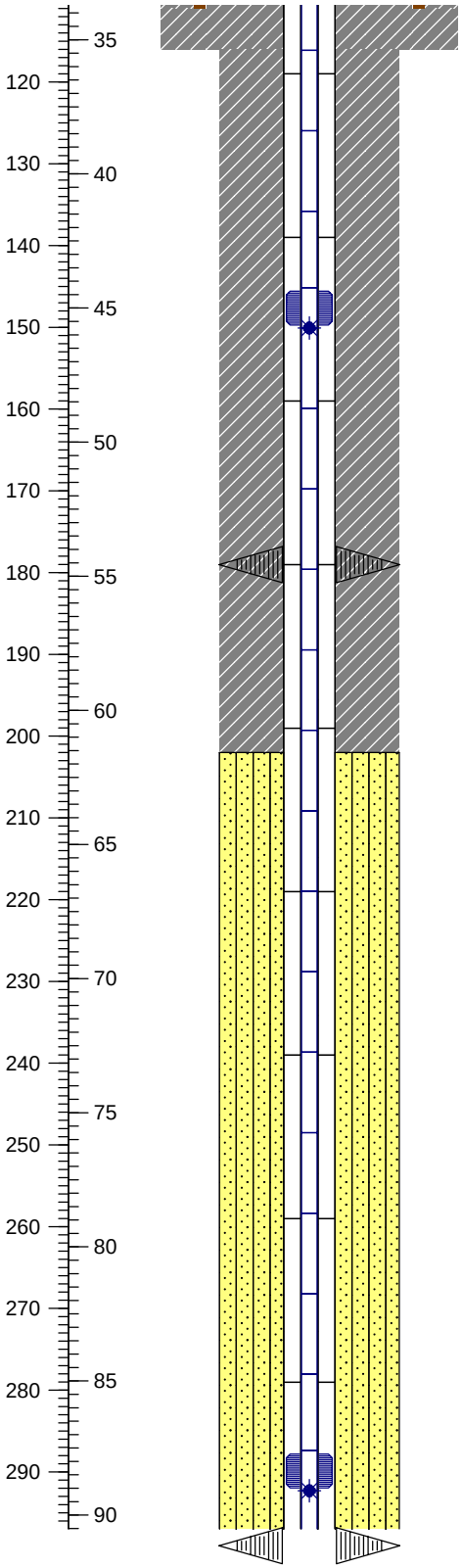

Well Descriptions
All depths listed are bgs (unless noted)

14" OD Steel Surface Casing Depth = 111' (33.83 m)

600 to 300 Series Westbay® well casing adapter above packer

Stabilizing 300 Series Packer Depth = 145.16-150.08' (44.24-45.74 m)

MP Depth (with Filter Sock) = 150.08' (45.74 m)

300 to 600 Series Westbay® well casing adapter below packer

Stainless steel bolted cage centralizer attached to casing at ~179.0' (~54.6 m)

600 to 300 Series Westbay® well casing adapter above packer

Stabilizing 300 Series Packer Depth = 287.39-292.31' (87.60 m)

MP Depth (with Filter Sock) = 292.31' (89.10 m)

Annular/Borehole Descriptions
All depths listed are bgs

17 1/2" Borehole Cemented to 116' (35.36 m)

Top of 10/20 Sand/Bentonite Mix = 202' (61.57 m)

Casing Explanation:

- Surface Casing **14" OD Steel**
- Conventional Casing **4.75" ID Schedule 80 PVC**
- Conventional Screen **4.75" ID Schedule 80 PVC 0.020"-slot**
- Conventional End Cap **4.75" ID Schedule 80 PVC**
- **Bolted Steel Centralizers**
- Water Table
- **2.25" ID MP55 Casing**
- **2.25" ID MP55 End Cap**
- Measurement Port (MP)
- MP with Filter Sock
- Mechanical Pumping Port (PP)
- Magnetic Collar
- Packer

Annular Materials Explanation:

- Cement
- Bentonite (Grout Well DF)
- Bentonite Seal
- 10/20 Sand/ Bentonite Mix
- Slough
- 1/8 Gravel
- 4/8 Sand
- 6/9 Sand
- 8/12 Sand
- 8/20 Sand
- 10/20 Sand
- 16/40 Sand
- 20/40 Sand
- 30/70 Sand

Feet/Meters

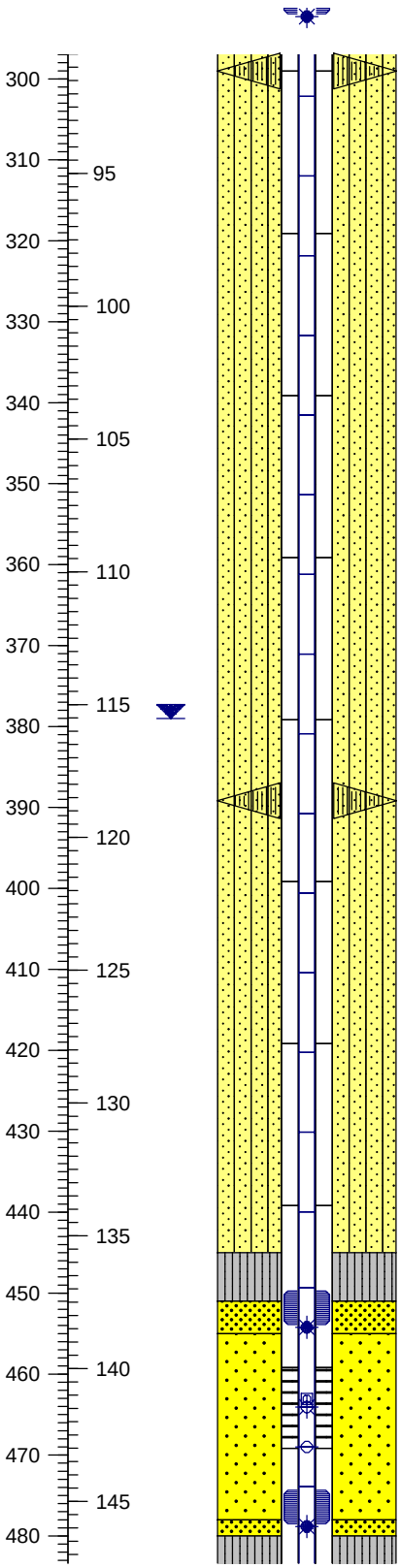

Well Descriptions
All depths listed are bgs (unless noted)

300 to 600 Series Westbay® well casing adapter below packer
Stainless steel bolted cage centralizer attached to casing at ~299.0' (~91.1 m)

Water Table = ~379.02' (115.53 m) TOC Measured 10/17/01 during Westbay® well casing installation

Stainless steel bolted cage centralizer attached to casing at ~389.2' (~118.6 m)

All Casing above 439.95' (134.10 m) is 600 Series (except packers). All casing below is 300 Series casing.

Packer Depth = 449.31-454.23' (136.95-138.45 m)

MP Depth (with Filter Sock) = 454.23' (138.45 m)

Magnetic Collar Depth = ~463.07' (~141.42 m)(Exact Location Not Recorded)
Top of Conventional Screen = 459.18' (139.96 m)

Sampling MP Depth = 464.07' (141.45 m)

PP Depth = 468.99' (142.95 m)

Bottom of Conventional Screen = 469.17' (143.00 m)

Packer Depth = 473.91-478.83' (144.45-145.95 m)

Annular/Borehole Descriptions
All depths listed are bgs

Top of Upper Bentonite Seal = 445' (135.64 m)
Top of Upper 30/70 Sand = 451' (137.46 m)
Top of 10/20 Sand = 455' (138.68 m)

Top of Lower 30/70 Sand = 478' (145.69 m)
Top of Lower Bentonite Seal = 480'

Casing Explanation:

- Surface Casing: **14" OD Steel**
- Conventional Casing: **4.75" ID Schedule 80 PVC**
- Conventional Screen: **4.75" ID Schedule 80 PVC 0.020"-slot**
- Conventional End Cap: **4.75" ID Schedule 80 PVC**
- **Bolted Steel Centralizers**
- Water Table
- **2.25" ID MP55 Casing**
- **2.25" ID MP55 End Cap**
- Measurement Port (MP)
- MP with Filter Sock
- Mechanical Pumping Port (PP)
- Magnetic Collar
- Packer

Annular Materials Explanation:

- Cement
- Bentonite (Grout Well DF)
- Bentonite Seal
- 10/20 Sand/ Bentonite Mix
- Slough
- 1/8 Gravel
- 4/8 Sand
- 6/9 Sand
- 8/12 Sand
- 8/20 Sand
- 10/20 Sand
- 16/40 Sand
- 20/40 Sand
- 30/70 Sand

Feet/Meters

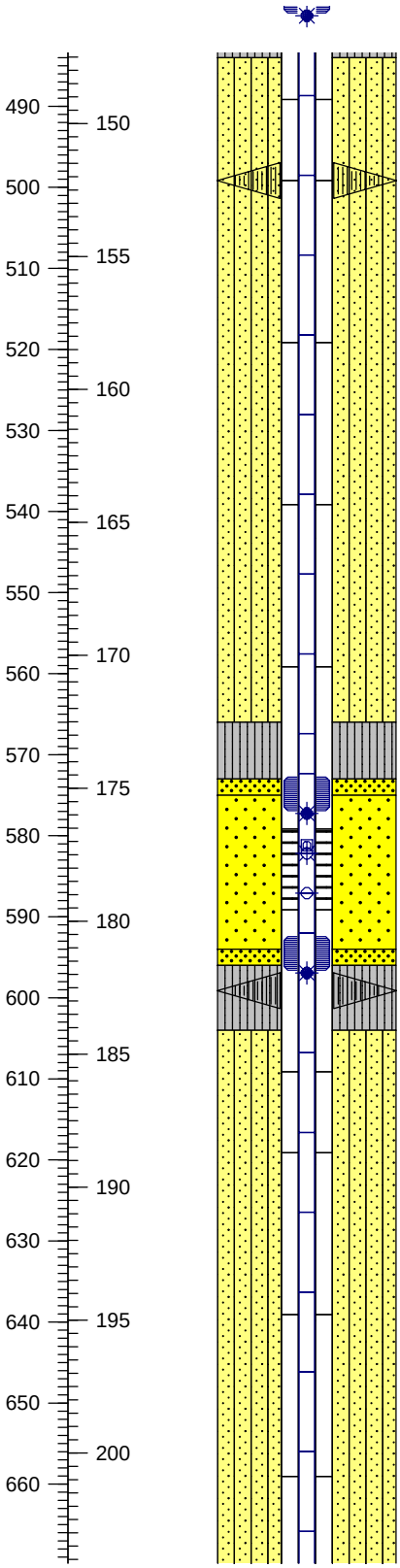

Well Descriptions
All depths listed are bgs (unless noted)

MP Depth (with Filter Sock) = 478.83' (145.95 m)

Stainless steel bolted cage centralizer attached to casing at ~499.2' (~152.2 m)

Packer Depth = 572.33-577.25' (174.45-175.95 m)

MP Depth (with Filter Sock) = 577.25' (175.95 m)
Magnetic Collar Depth = ~581.17' (~177.44 m)(Exact Location Not Recorded)
Top of Conventional Screen = 579.16' (176.53 m)
Sampling MP Depth = 582.17' (177.45 m)

PP Depth = 587.09' (178.95 m)

Bottom of Conventional Screen = 589.13' (179.57 m)
Packer Depth = 592.01-596.94' (180.44-181.95 m)

MP Depth (with Filter Sock) = 596.94' (181.95 m)

Stainless steel bolted cage centralizer attached to casing at ~599.1' (~180.8 m)

Annular/Borehole Descriptions
All depths listed are bgs

(146.30 m)
Top of 10/20 Sand/Bentonite Mix = 484' (147.52 m)

Geologic Formation = Volcanic-Rich Santa Fe Group Alluvium 520 - 1,020' (158.50 - 310.90 m)

Top of Upper Bentonite Seal = 566' (172.52 m)
Top of Upper 30/70 Sand = 573' (174.65 m)
Top of 10/20 Sand = 575' (175.26 m)

Top of Lower Bentonite Seal = 598' (182.27 m)

Top of 10/20 Sand/Bentonite Mix = 604' (184.10 m)

Casing Explanation:

- Surface Casing **14" OD Steel**
- Conventional Casing **4.75" ID Schedule 80 PVC**
- Conventional Screen **4.75" ID Schedule 80 PVC 0.020"-slot**
- Conventional End Cap **4.75" ID Schedule 80 PVC**
- **Bolted Steel Centralizers**
- Water Table
- **2.25" ID MP55 Casing**
- **2.25" ID MP55 End Cap**
- Measurement Port (MP)
- MP with Filter Sock
- Mechanical Pumping Port (PP)
- Magnetic Collar
- Packer

Annular Materials Explanation:

- Cement
- Bentonite (Grout Well DF)
- Bentonite Seal
- 10/20 Sand/ Bentonite Mix
- Slough
- 1/8 Gravel
- 4/8 Sand
- 6/9 Sand
- 8/12 Sand
- 8/20 Sand
- 10/20 Sand
- 16/40 Sand
- 20/40 Sand
- 30/70 Sand

Feet/Meters

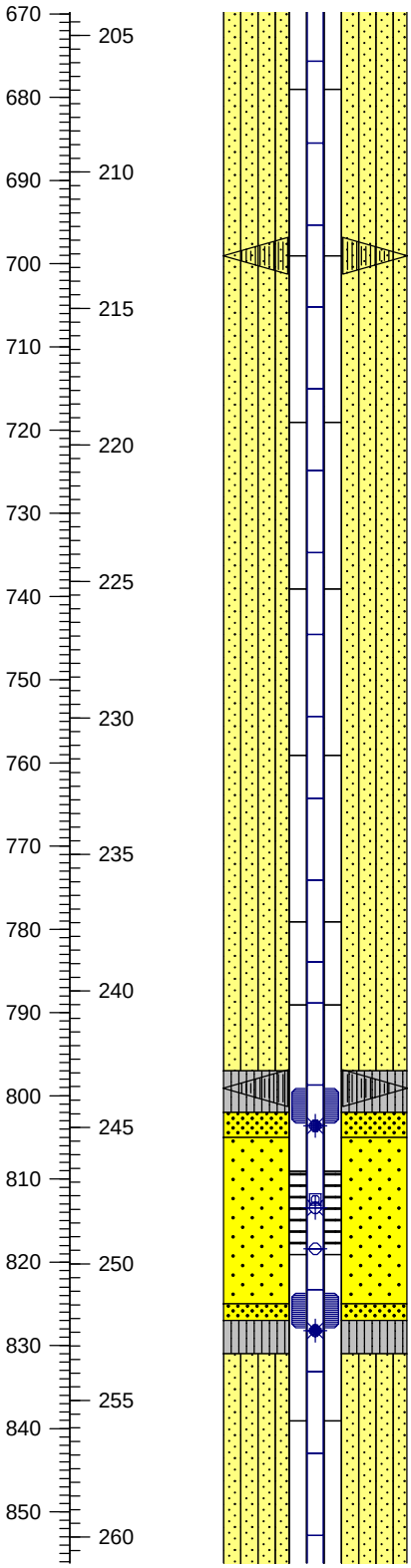

Well Descriptions
All depths listed are bgs (unless noted)

Stainless steel bolted cage centralizer attached to casing at ~699.1' (~213.1 m)

Stainless steel bolted cage centralizer attached to casing at ~799.1' (~243.6 m)

Packer Depth = 798.70-803.62' (243.44-244.94 m)

MP Depth (with Filter Sock) = 803.62' (244.94 m)

Magnetic Collar Depth = ~812.46' (~247.84 m)(Exact Location Not Recorded)

Top of Conventional Screen = 809.08' (246.61 m)

Sampling MP Depth = 813.46' (247.94 m)

PP Depth = 818.38' (249.44 m)

Bottom of Conventional Screen = 819.07' (249.65 m)

Packer Depth = 823.30-828.22' (250.94-252.44 m)

MP Depth (with Filter Sock) = 828.22' (252.44 m)

Annular/Borehole Descriptions
All depths listed are bgs

Top of Upper Bentonite Seal = 797' (242.93 m)

Top of Upper 30/70 Sand = 802' (244.45 m)

Top of 10/20 Sand = 805' (245.36 m)

Top of Lower 30/70 Sand = 825' (251.46 m)

Top of Lower Bentonite Seal = 827' (252.07 m)

Top of 10/20 Sand/Bentonite Mix = 831' (253.29 m)

Casing Explanation:

- Surface Casing **14" OD Steel**
- Conventional Casing **4.75" ID Schedule 80 PVC**
- Conventional Screen **4.75" ID Schedule 80 PVC 0.020"-slot**
- Conventional End Cap **4.75" ID Schedule 80 PVC**
- **Bolted Steel Centralizers**
- Water Table
- **2.25" ID MP55 Casing**
- **2.25" ID MP55 End Cap**
- Measurement Port (MP)
- MP with Filter Sock
- Mechanical Pumping Port (PP)
- Magnetic Collar
- Packer

Annular Materials Explanation:

- Cement
- Bentonite (Grout Well DF)
- Bentonite Seal
- 10/20 Sand/ Bentonite Mix
- Slough
- 1/8 Gravel
- 4/8 Sand
- 6/9 Sand
- 8/12 Sand
- 8/20 Sand
- 10/20 Sand
- 16/40 Sand
- 20/40 Sand
- 30/70 Sand

Feet/Meters

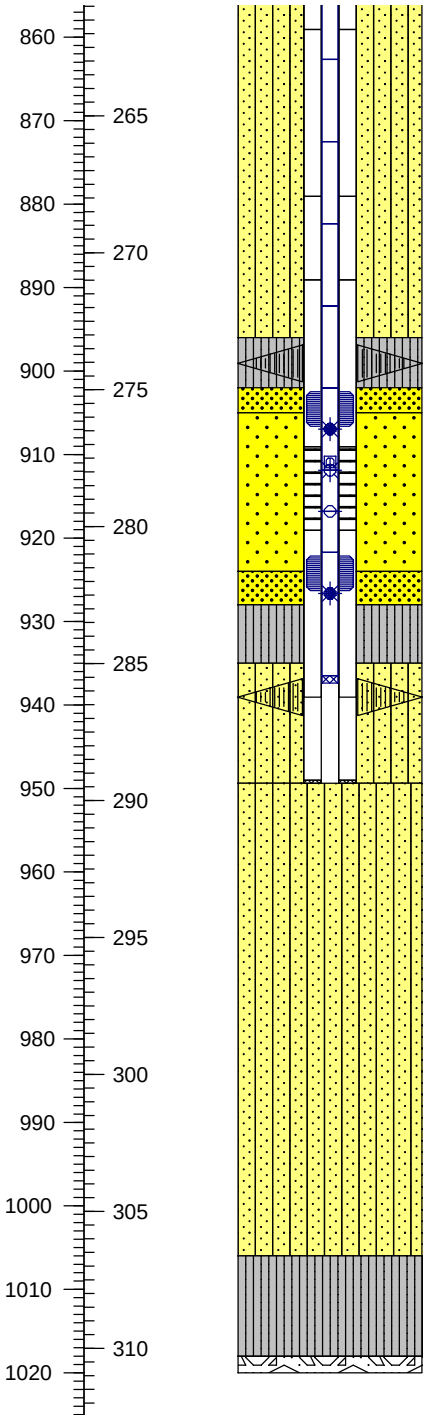

Well Descriptions
All depths listed are bgs (unless noted)

Stainless steel bolted cage centralizer attached to casing at ~899.1' (~274.0 m)
Packer Depth = 902.04-906.76' (274.94-276.38 m)

MP Depth (with Filter Sock) = 906.76' (276.38 m)
Magnetic Collar Depth = ~910.88' (~277.82 m)(Exact Location Not Recorded)
Top of Conventional Screen = 909.07' (277.08 m)
Sampling MP Depth = 911.88' (277.94 m)

PP Depth = 916.80' (279.44 m)

Bottom of Conventional Screen = 919.07' (280.13 m)
Packer Depth = 921.72-926.64' (280.94-282.44 m)

MP Depth (with Filter Sock) = 926.64' (282.44 m)

Westbay® MP 55 Casing TD = 937.38' (285.71 m)

Stainless steel bolted cage centralizer attached to casing at ~939.1' (~286.2 m)
Conventional 4" 304 Stainless Steel Well TD = 949.37' (289.37 m)

Annular/Borehole Descriptions
All depths listed are bgs

Top of Upper Bentonite Seal = 896' (273.10 m)
Top of Upper 30/70 Sand = 902' (274.93 m)
Top of 10/20 Sand = 905' (275.84 m)

Top of Lower 30/70 Sand = 924' (281.64 m)
Top of Lower Bentonite Seal = 928' (282.85 m)

Top of 10/20 Sand/Bentonite Mix = 935' (284.99 m)

Top of Bentonite Seal = 1,006' (306.63 m)

Top of Slough = 1,018' (310.29 m)

12 1/4" Borehole TD = 1,020' (310.90 m)

Figure 3.1 WW-4 FLUTe Well Completion Diagram

(SEE NEXT PAGE)

WW-4 WATER FLUTe INSTALLATION DIAGRAM

Brass Cap: 4,443.19' (AMSL)
Borehole Diameter: 17 ½" 0-117'; 12 ¼" 117'-1,020'
Surface Casing: Nominal 14" (13 ½" Inside Diameter [ID]) Carbon Steel to 117'
Casing and Screen: Nominal 5" (4 ¾" ID) Schedule (SCH) 80 PVC

Coordinates: 554,772.88' N; 1,512,065.15' E
Original Development Start Date: 04/18/01
Original Development End Date: 04/25/01
Redevelopment Start Date: 09/29/15
Redevelopment End Date: 10/02/15
FLUTe Well Installation Date: 11/09/15

Water FLUTe Sampling Zones:
419'-429'
589'-599'
848'-858'
948'-958'

Not to Scale
All measurements in ft-bgs unless otherwise noted
Coordinates are NM State Plan (NAD 83 in ft)

PVC Casing Stick-up: ~1'

Well Apron Construction:
3' x 3' x 4" sloped concrete pad, barrier posts, and locking steel well cap surrounding casing.

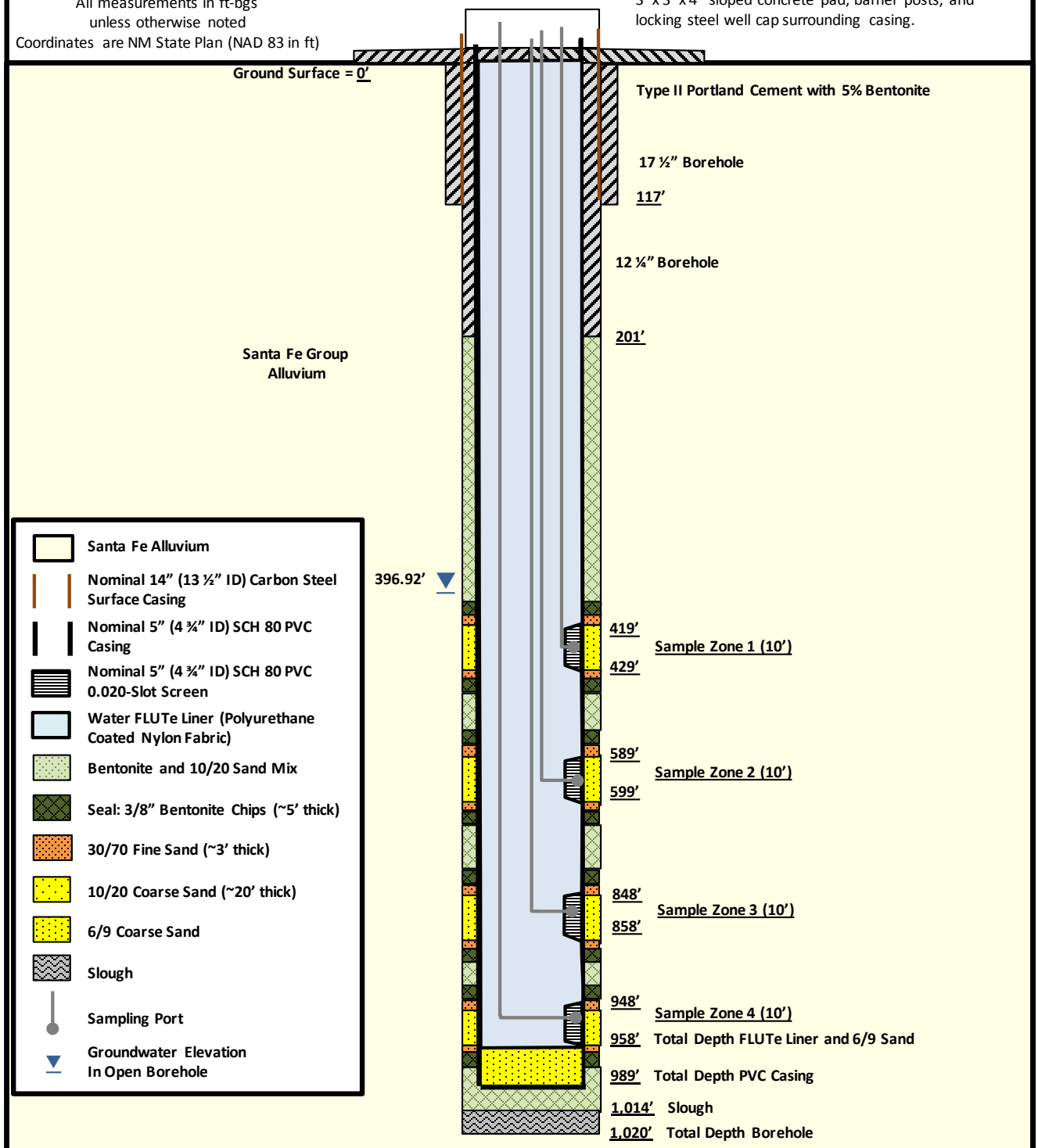

Figure 3.2 WW-5 FLUTe Well Completion Diagram

(SEE NEXT PAGE)

WW-5 WATER FLUTe INSTALLATION DIAGRAM

Brass Cap: 4,444.59' (AMSL)
Borehole Diameter: 17 ½" 0-116'; 12 ¼" 116'-1,020'
Surface Casing: Nominal 14" (13 ½" Inside Diameter [ID]) Carbon Steel to 116'
Casing and Screen: Nominal 5" (4 ¾" ID) Schedule (SCH) 80 PVC

Coordinates: 557,042.74' N; 1,512,073.89' E
Original Development Start Date: 09/27/01
Original Development End Date: 10/06/01
Redevelopment Start Date: 09/26/15
Redevelopment End Date: 09/29/15
FLUTe Well Installation Date: 11/10/15

Water FLUTe Sampling Zones:
459'-469'
579'-589'
809'-819'
909'-919'

Not to Scale
All measurements in ft-bgs unless otherwise noted
Coordinates are NM State Plane (NAD 83 in ft)

PVC Casing Stick-up: ~1'

Well Apron Construction:
3' x 3' x 4" sloped concrete pad, barrier posts, and locking steel well cap surrounding casing.

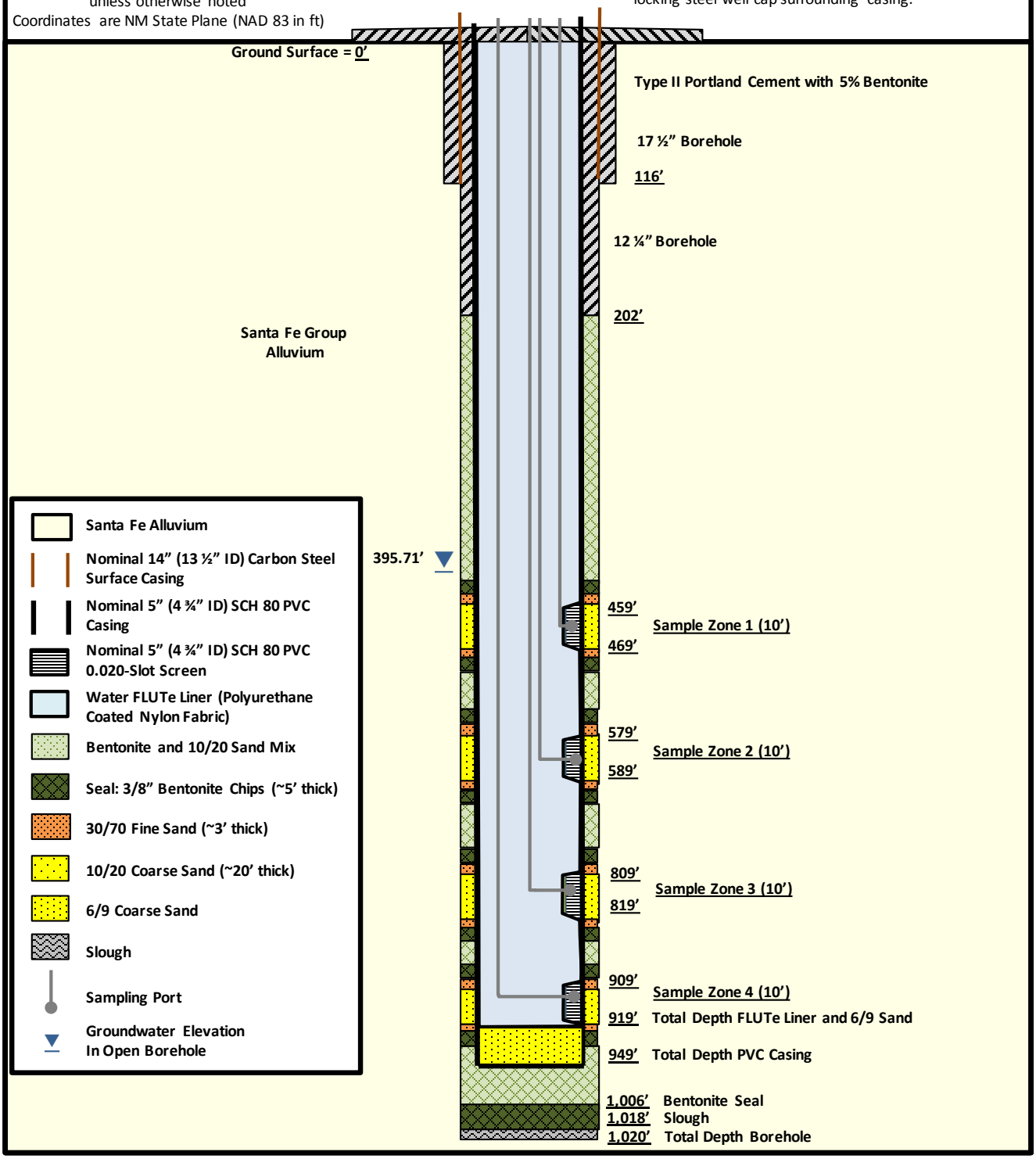

Tables

Table 6.1 Analytes Detected During First WW-4 Water FLUTe Sampling Event

Analyte	CAS #	Analytical Method	Results	Unit	MDL	PQL	Qualifier
WW-4-419 – December 14, 2015							
Acetone	67-64-1	8260C	14	µg/L	1.3	5	
Bromomethane	74-83-9	8260C	0.24	µg/L	0.24	0.5	J RB
Nitrate+Nitrite as Nitrogen	NA	353.2	1.25	mg/L	0.003	0.05	
N-Nitrosodimethylamine	62-75-9	NDMA_LL	2.5	ng/L	0.35	0.48	FB
Perchlorate	14797-73-0	6850	0.34	µg/L	0.026	0.2	
Toluene	108-88-3	8260C	1.9	µg/L	0.2	0.5	
WW-4-589 – December 15, 2015							
Acetone	67-64-1	8260C	15	µg/L	1.3	5	
Nitrate+Nitrite as Nitrogen	NA	353.2	0.79	mg/L	0.003	0.05	
N-Nitrodimethylamine	4164-28-7	NDMA_LL	1.3	ng/L	0.17	0.48	
N-Nitrosodimethylamine	62-75-9	NDMA_LL	5.6	ng/L	0.35	0.48	TB
Perchlorate	14797-73-0	6850	0.28	µg/L	0.026	0.2	
Toluene	108-88-3	8260C	0.72	µg/L	0.2	0.5	
WW-4-848 – December 15, 2015							
Acetone	67-64-1	8260C	8.1	µg/L	1.3	5	
Nitrate+Nitrite as Nitrogen	NA	353.2	0.71	mg/L	0.003	0.05	
N-Nitrosodimethylamine	62-75-9	NDMA_LL	2.2	ng/L	0.37	0.5	FB
Perchlorate	14797-73-0	6850	0.2	µg/L	0.026	0.2	
Toluene	108-88-3	8260C	0.74	µg/L	0.2	0.5	
WW-4-948 – December 15, 2015							
Acetone	67-64-1	8260C	5.5	µg/L	1.3	5	
Bromomethane	74-83-9	8260C	0.37	µg/L	0.24	0.5	J RB
2-Butanone (MEK)	78-93-3	8260C	2.8	µg/L	0.81	5	J

Table 6.1 Analytes Detected During First WW-4 Water FLUTe Sampling Event

Analyte	CAS #	Analytical Method	Results	Unit	MDL	PQL	Qualifier
Nitrate+Nitrite as Nitrogen	NA	353.2	1.08	mg/L	0.003	0.05	
N-Nitrodimethylamine	4164-8-7	NDMA_LL	1.2	ng/L	0.17	0.48	
N-Nitrosodimethylamine	62-75-9	NDMA_LL	25	ng/L	0.35	0.48	
Perchlorate	14797-73-0	6850	0.37	µg/L	0.026	0.2	
Toluene	108-88-3	8260C	12	µg/L	0.2	0.5	

MDL – Method Detection Limit.
PQL – Practical Quantitation Limit
J – Indicates that the analyte was detected above the MDL but below the PQL.
FB – Indicates that the analyte was detected in the field blank.
RB – Indicates that the analyte was detected in the method blank.
TB – Indicates that the analyte was detected in the trip blank.

Table 6.2 Analytes Detected During First WW-5 Water FLUTe Sampling Event

Analyte	CAS #	Analytical Method	Results	Unit	MDL	PQL	Qualifier
WW-5-459 – January 25, 2015							
Acetone	67-64-1	8260C	8.2	µg/L	1.3	5	
Nitrate+Nitrite as Nitrogen	NA	353.2	2.4	mg/L	0.005	0.1	
N-Nitrosodimethylamine	62-75-9	NDMA_LL	1.4	ng/L	0.35	0.48	
Perchlorate	14797-73-0	6850	0.56	µg/L	0.026	0.2	
Toluene	108-88-3	8260C	3	µg/L	0.2	0.5	
WW-5-579 – January 26, 2015							
Acetone	67-64-1	8260C	6.5	µg/L	1.3	5	
Nitrate+Nitrite as Nitrogen	NA	353.2	1.96	mg/L	0.003	0.05	
Perchlorate	14797-73-0	6850	0.45	µg/L	0.026	0.2	
Toluene	108-88-3	8260C	0.33	µg/L	0.2	0.5	J
WW-5-809 – January 25, 2015							
Acetone	67-64-1	8260C	7.1	µg/L	1.3	5	
Nitrate+Nitrite as Nitrogen	NA	353.2	1.8	mg/L	0.003	0.05	
N-Nitrosodimethylamine	62-75-9	NDMA_LL	0.43	ng/L	0.35	0.48	J
Perchlorate	14797-73-0	6850	0.41	µg/L	0.026	0.2	
Toluene	108-88-3	8260C	0.47	µg/L	0.2	0.5	J
WW-5-909 – January 26, 2015							
Acetone	67-64-1	8260C	4.6	µg/L	1.3	5	J
Nitrate+Nitrite as Nitrogen	NA	353.2	3.75	mg/L	0.01	0.2	
N-Nitrodimethylamine	4164-28-7	NDMA_LL	0.22	ng/L	0.17	0.48	J
N-Nitrosodimethylamine	62-75-9	NDMA_LL	1.2	ng/L	0.35	0.48	
Perchlorate	14797-73-0	6850	0.81	µg/L	0.026	0.2	
Toluene	108-88-3	8260C	1.2	µg/L	0.2	0.5	

Table 6.2 Analytes Detected During First WW-5 Water FLUTe Sampling Event

Analyte	CAS #	Analytical Method	Results	Unit	MDL	PQL	Qualifier

MDL – Method Detection Limit.
PQL – Practical Quantitation Limit
J – Indicates that the analyte was detected above the MDL but below the PQL.
FB – Indicates that the analyte was detected in the field blank.

Appendix A WW-4 and WW-5 Redevelopment Sheets

WELL DEVELOPMENT

WELL RE-DEVELOPMENT

Provide all depth measurements with respect to ground surface

Site/Screen Name:	WSTF – WW-4	Project No.:	4EEMRWP
Location:	Doña Ana Co., NM	Document Originator:	G. Giles
Lead Company:	Navarro Res & Eng., Inc.	Document Reviewer:	L. Hunnicutt-Mack
Supporting Company:	Yellow Jacket Drilling	Review Complete:	March 2016

FINAL WELL DEVELOPMENT PARAMETERS

Well Total Depth: 988.51 ft bgs Screened Interval: 848 ft bgs to 858 ft bgs

Total Volume Withdrawn (Bailing): 109 gals. Total Volume Withdrawn (Pumping): 7547 gals

DEVELOPMENTAL TOOLS

Tool:	5-gpm Pump	Description:	5 gpm (nominal) Electric Submersible Pump	Used from:	950 ft BGS	to	950 ft BGS
Tool:		Description:		Used from:		to	

WELL DEVELOPMENT DATA

Date	Time	Meter Type	Totalizer Reading	Volume Withdrawn (gal)	Cumulative Withdrawn (gal)	Pumping Rate (gpm)	pH	Temp (°C)	SC (µS/cm)	Turbidity (NTU)	Pump Intake (ft bgs)
09/30/2015	1030	Totalizer Ser. No.: Z003277	12227	0	0	~6.70	Start-up: No Parameters Measured			43.9	950
	1100		12430	203	203	6.77	8.11	26.4	1043	91.3	
	1130		12626	196	399	6.53	8.18	26.6	1034	21.3	
	1200		12820	194	593	6.47	8.18	26.9	1032	12..6	
	1230		13012	192	785	6.40	8.19	27.0	1035	8.61	
	1300		13201	189	974	6.30	8.19	27.2	1031	6.53	
	1330		13397	196	1170	6.53	8.15	27.5	1026	5.26	
	1400		13588	191	1361	6.37	8.17	27.9	1028	4.67	
	1430		13776	188	1549	6.27	8.15	27.8	1024	4.97	
	1500		13970	194	1743	6.47	8.18	27.8	1023	3.18	
	1530		14172	202	1945	6.73	8.18	27.7	1028	3.19	

WELL RE-DEVELOPMENT (Continued)

Provide all depth measurements with respect to ground surface

Site/Screen Name:	WSTF – WW-4	Project No.:	4EEMRWP
Location:	Doña Ana Co., NM	Document Originator:	G. Giles, J. Lawrence
Lead Company:	Navarro Res & Eng., Inc.	Document Reviewer:	L. Hunnicutt-Mack
Supporting Company:	Yellow Jacket Drilling	Review Complete:	March 2016

FINAL WELL DEVELOPMENT PARAMETERS

Well Total Depth: 988.51 ft bgs Screened Interval: 848 ft bgs to 858 ft bgs

Total Volume Withdrawn (Bailing): 109 gals. Total Volume Withdrawn (Pumping): 7547 gals

DEVELOPMENTAL TOOLS

Tool:	5-gpm Pump	Description:	5 gpm (nominal) Electric Submersible Pump	Used from:	855 ft BGS	to	855 ft BGS
Tool:		Description:		Used from:		to	

WELL DEVELOPMENT DATA

Date	Time	Meter Type	Totalizer Reading	Volume Withdrawn (gal)	Cumulative Withdrawn (gal)	Pumping Rate (gpm)	pH	Temp (°C)	SC (µS/cm)	Turbidity (NTU)	Pump Intake (ft bgs)
09/30/2015	1555	Totalizer Ser. No.: Z003277	14172	0	0/1945	6.5	Start-up: No Parameters Measured			4.19	855
	1625		14376	204	204/2149	6.8	8.18	27.5	1028	4.80	
	1655		14577	201	405/2350	6.7	8.15	27.3	1024	3.80	
10/01/2015	0800		14577	0	405/2350	6.3	Start-up: No Parameters Measured				
	0830		14720	143	548/2493	6.2	8.40	25.5	1033	31.0	
	0900		14900	180	728/2673	6.3	8.37	25.9	1031	11.6	
	0930		15110	210	938/2883	6.4	8.14	26.3	1030	9.77	
	1002		15320	210	1148/3093	6.3	8.02	26.9	1017	10.6	
	1040		15572	252	1400/3345	6.3	8.14	27.7	1028	11.2	
	1102		15720	148	1548/3493	6.4	8.24	27.7	1031	11.4	
	1130		15902	182	1730/3675	6.4	8.17	27.9	1033	11.3	
	1140		15966	64	1794/3739	Final Reading: No Parameters Measured					

WELL RE-DEVELOPMENT (Continued)

Provide all depth measurements with respect to ground surface

Site/Screen Name:	WSTF – WW-4	Project No.:	4EEMRWP
Location:	Doña Ana Co., NM	Document Originator:	J. Lawrence
Lead Company:	Navarro Res & Eng., Inc.	Document Reviewer:	L. Hunnicutt-Mack
Supporting Company:	Yellow Jacket Drilling	Review Complete:	March 2016

FINAL WELL DEVELOPMENT PARAMETERS

Well Total Depth: 988.51 ft bgs Screened Interval: 588.5 ft bgs to 598.5 ft bgs

Total Volume Withdrawn (Bailing): 109 gals. Total Volume Withdrawn (Pumping): 7547 gals

DEVELOPMENTAL TOOLS

Tool:	5-gpm Pump	Description:	5 gpm (nominal) Electric Submersible Pump	Used from:	593 ft BGS	to	593 ft BGS
Tool:		Description:		Used from:		to	

WELL DEVELOPMENT DATA

Date	Time	Meter Type	Totalizer Reading	Volume Withdrawn (gal)	Cumulative Withdrawn (gal)	Pumping Rate (gpm)	pH	Temp (°C)	SC (µS/cm)	Turbidity (NTU)	Pump Intake (ft bgs)
10/01/2015	1225	Totalizer Ser. No.: Z003277	15966	0	0/3739	6.4	Start-up: No Parameters Measured				593
	1300		16220	254	254/3993	6.4	8.28	26.9	1044	5.38	
	1330		16433	213	467/4206	6.9	8.18	26.8	1040	5.97	
	1359		16620	187	654/4393	6.4	8.04	27.5	1042	11.3	
	1431		16831	211	865/4604	6.4	8.06	27.1	1032	7.17	
	1458		17025	194	1059/4798	6.4	8.08	27.4	1022	4.28	
	1530		17230	205	1264/5003	6.4	8.12	26.9	1021	2.65	
	1600		17440	210	1474/5213	6.4	8.03	27.2	1009	2.20	
	1637		17690	250	1724/5463	6.5	8.09	27.1	1018	1.81	
	1642		17736	46	1770/5509	Final Reading: No Parameters Measured					
10/02/2015	0715	Totalizer Ser. No.: Z003277	17736	0	1770/5509	6.4	Start-up: No Parameters Measured				593
	0735		17870	134	1904/5643	6.3	8.41	23.1	1036	6.45	
	0800		18040	170	2074/5813	6.3	8.36	25.1	1031	3.93	
	0832		18260	220	2294/6033	6.4	8.37	25.5	1024	2.83	
	0900		18440	180	2474/6213	6.3	8.31	25.8	1014	4.40	
	0906		18488	48	2522/6261	Final Reading: No Parameters Measured					

WELL RE-DEVELOPMENT (Continued)

Provide all depth measurements with respect to ground surface

Site/Screen Name:	WSTF – WW-4	Project No.:	4EEMRWP
Location:	Doña Ana Co., NM	Document Originator:	J. Lawrence
Lead Company:	Navarro Res & Eng., Inc.	Document Reviewer:	L. Hunnicutt-Mack
Supporting Company:	Yellow Jacket Drilling	Review Complete:	March 2016

FINAL WELL DEVELOPMENT PARAMETERS

Well Total Depth: 988.51 ft bgs Screened Interval: 418.8 ft bgs to 428.8 ft bgs

Total Volume Withdrawn (Bailing): 109 gals. Total Volume Withdrawn (Pumping): 7547 gals

DEVELOPMENTAL TOOLS

Tool:	5-gpm Pump	Description:	5 gpm (nominal) Electric Submersible Pump	Used from:	425 ft BGS	to	425 ft BGS
Tool:		Description:		Used from:		to	

WELL DEVELOPMENT DATA

Date	Time	Meter Type	Totalizer Reading	Volume Withdrawn (gal)	Cumulative Withdrawn (gal)	Pumping Rate (gpm)	pH	Temp (°C)	SC (µS/cm)	Turbidity (NTU)	Pump Intake (ft bgs)
10/02/2015	0934	Totalizer Ser. No.: Z003277	18488	0	0/6261	6.1	Startup – No Parameters Measured				425
	0950		18620	132	132/6393	6.4	8.17	26.8	1055	31.9	
	1010		18750	130	262/6523	6.4	8.31	26.2	1018	3.40	
	1030		18890	140	402/6663	6.4	8.25	26.4	1020	1.58	
	1100		19100	210	612/6873	6.5	8.32	26.5	1015	1.52	
	1130		19290	190	802/7063	6.4	8.27	27.2	1017	1.08	
	1202		19510	220	1022/7283	6.5	8.28	27.1	1021	1.16	
	1231		19710	200	1222/7483	6.4	8.32	27.2	1020	0.93	
	1241		19774	64	1286/7547	Final Reading – No Parameters Measured					

WELL DEVELOPMENT

WELL RE-DEVELOPMENT

Provide all depth measurements with respect to ground surface

Site/Screen Name:	WSTF – WW-5	Project No.:	4EEMRWP
Location:	Doña Ana Co., NM	Document Originator:	J. Roland
Lead Company:	Navarro Res & Eng., Inc.	Document Reviewer:	L. Hunnicutt-Mack
Supporting Company:	Yellow Jacket Drilling	Review Complete:	March 2016

FINAL WELL DEVELOPMENT PARAMETERS

Well Total Depth: 949.37 ft bgs Screened Interval: 909 ft bgs to 919 ft bgs

Total Volume Withdrawn (Bailing): 162 gals. Total Volume Withdrawn (Pumping): 5735 gals

DEVELOPMENTAL TOOLS

Tool: 5-gpm Pump Description: 5 gpm (nominal) Electric Submersible Pump Used from: 907 ft BGS to 917 ft BGS

Tool: _____ Description: _____ Used from: _____ to _____

WELL DEVELOPMENT DATA

Date	Time	Meter Type	Totalizer Reading	Volume Withdrawn (gal)	Cumulative Withdrawn (gal)	Pumping Rate (gpm)	pH	Temp (°C)	SC (µS/cm)	Turbidity (NTU)	Pump Intake (ft bgs)
09/27/2015	1245	Totalizer Ser. No.: Z003277	6492	0	0	NR	Start-up: No Parameters Measured				907
	1315		6685	193	193	~5.5	NR	NR	NR	759.0	
	1345		6885	200	393	6.6	8.29	28.2	1040	14.5	
	1415		7085	200	593	6.6	8.30	28.1	1039	7.5	
	1445		7280	195	788	6.5	8.36	27.8	1034	5.5	
	1505		7415	135	923	Pump off ~ 140 min/2.3 hrs.					
	1512		7415	0	923	0	Start-up: No Parameters Measured				917
	1542		7610	195	1118	6.5	8.29	28.2	1036	3.22	
	1612		7806	196	1314	6.5	8.34	28.5	1025	3.1	
	NR		8001	195	1509	6.5	8.28	28.4	1020	2.97	

NR = Not Recorded

WELL DEVELOPMENT

WELL DEVELOPMENT (Continued)

Provide all depth measurements with respect to ground surface

Site/Screen Name:	WSTF – WW-5	Project No.:	4EEMRWP
Location:	Doña Ana Co., NM	Document Originator:	J. Roland, G. Giles
Lead Company:	Navarro Res & Eng., Inc.	Document Reviewer:	L. Hunnicutt-Mack
Supporting Company:	Yellow Jacket Drilling	Review Complete:	March 2016

FINAL WELL DEVELOPMENT PARAMETERS

Well Total Depth: 949.37 ft bgs Screened Interval: 809 ft bgs to 819 ft bgs

Total Volume Withdrawn (Bailing): 162 gals. Total Volume Withdrawn (Pumping): 5735 gals

DEVELOPMENTAL TOOLS

Tool:	5-gpm Pump	Description:	5 gpm (nominal) Electric Submersible Pump	Used from:	808 ft BGS	to	818 ft BGS
Tool:		Description:		Used from:		to	

WELL DEVELOPMENT DATA

Date	Time	Meter Type	Totalizer Reading	Volume Withdrawn (gal)	Cumulative Withdrawn (gal)	Pumping Rate (gpm)	pH	Temp (°C)	SC (µS/cm)	Turbidity (NTU)	Pump Intake (ft bgs)
09/28/2015	0830	Totalizer Ser. No.: Z003277	8001	0	0/1509	NR	Start-up: No Parameters Measured				808
	0845		NR	NR	NR	NR	NR	NR	NR	9.08	
	0900		8203	202	202/1711	6.7	8.3	26.4	1001	8.02	
	0930		8403	200	402/1911	6.6	8.4	26.0	1011	8.02	
	1000		8612	209	611/2120	6.97	8.34	27.0	1017	4.07	
	1030		8812	200	811/2320	6.67	8.31	27.4	1035	4.08	
	1100		9013	201	1012/2521	6.70	8.30	28.1	1033	4.82	
	1130		9216	203	1215/2724	6.77	8.30	28.2	1039	4.07	
	1140		9216	0	1215/2724	Dropped 10' to 818'; Pump on.					818
	1210		9426	210	1425/2934	7.00	8.32	28.0	1049	3.77	
	1240		9632	206	1631/3140	6.87	8.30	28.5	1042	3.87	
	1310		9834	202	1833/3342	6.73	8.30	28.9	1046	3.40	
	1340		10038	204	2037/3546	6.80	8.29	28.8	1041	2.82	
	1410		10248	210	2247/3756	7.00	8.29	28.9	1043	2.54	
	1440		10444	196	2443/3952	6.53	8.27	29.2	1043	3.06	

NR = Not Recorded

WELL RE-DEVELOPMENT (Continued)

Provide all depth measurements with respect to ground surface

Site/Screen Name:	WSTF – WW-5	Project No.:	4EEMRWP
Location:	Doña Ana Co., NM	Document Originator:	J. Roland, G. Giles
Lead Company:	Navarro Res & Eng., Inc.	Document Reviewer:	L. Hunnicutt-Mack
Supporting Company:	Yellow Jacket Drilling	Review Complete:	March 2016

FINAL WELL DEVELOPMENT PARAMETERS

Well Total Depth: 949.37 ft bgs Screened Interval: 579 ft bgs to 589 ft bgs

Total Volume Withdrawn (Bailing): 162 gals. Total Volume Withdrawn (Pumping): 5735 gals

DEVELOPMENTAL TOOLS

Tool:	5-gpm Pump	Description:	5 gpm (nominal) Electric Submersible Pump	Used from:	582 ft BGS	to	582 ft BGS
Tool:		Description:		Used from:		to	

WELL DEVELOPMENT DATA

Date	Time	Meter Type	Totalizer Reading	Volume Withdrawn (gal)	Cumulative Withdrawn (gal)	Pumping Rate (gpm)	pH	Temp (°C)	SC (µS/cm)	Turbidity (NTU)	Pump Intake (ft bgs)
09/28/2015	1522	Totalizer Ser. No.: Z003277	10444	0	0/3952	Pump Intake Set at 582'; Pump On				5.98	582
	1552		10645	201	201/4153	6.70	8.22	28.7	1020	5.06	
	1622		10848	203	404/4356	6.77	8.24	28.6	1030	3.50	
	1652		11055	207	611/4563	6.90	8.31	28.8	1042	3.52	

WELL RE-DEVELOPMENT (Continued)

Provide all depth measurements with respect to ground surface

Site/Screen Name:	WSTF – WW-5	Project No.:	4EEMRWP
Location:	Doña Ana Co., NM	Document Originator:	J. Lawrence
Lead Company:	Navarro Res & Eng., Inc.	Document Reviewer:	L. Hunnicutt-Mack
Supporting Company:	Yellow Jacket Drilling	Review Complete:	March 2016

FINAL WELL DEVELOPMENT PARAMETERS

Well Total Depth: 949.37 ft bgs Screened Interval: 459 ft bgs to 469 ft bgs

Total Volume Withdrawn (Bailing): 162 gals. Total Volume Withdrawn (Pumping): 5735 gals

DEVELOPMENTAL TOOLS

Tool: 5-gpm Pump Description: 5 gpm (nominal) Electric Submersible Pump Used from: 465 ft BGS to 465 ft BGS

Tool: _____ Description: _____ Used from: _____ to _____

WELL DEVELOPMENT DATA

Date	Time	Meter Type	Totalizer Reading	Volume Withdrawn (gal)	Cumulative Withdrawn (gal)	Pumping Rate (gpm)	pH	Temp (°C)	SC (µS/cm)	Turbidity (NTU)	Pump Intake (ft bgs)
09/29/2015	0820	Totalizer Ser. No.: Z003277	11055	0	0/4563	6.44	Pump Intake Set at 465'; Pump On			NM	465
	0850		11260	205	205/4768	7.23	7.59	26.2	1018	1.98	
	0920		11476	216	421/4984	7.20	8.23	27.0	1026	1.11	
	0950		11668	192	613/5176	6.40	8.25	27.2	1055	1.30	
	1020		11882	214	827/5390	7.09	8.28	27.1	1049	1.35	
	1050		12090	208	1035/5598	7.17	8.18	28.5	1032	1.31	
	1115		12227	137	1172/5735	Pump Stopped	Final Reading: No Parameters Measured				

NM = Not Measured

Appendix B WW-4 and WW-5 Initial FLUTe Sampling Analytical Data Table

wellname	event_date	sample_number	spec_method	analysis	casno	analyte	result	units	PQL	MDL	extract effiency	qa_flag
WW-4-419	14-Dec-15	1512151000B	SM 2320 B-1997(20	ANIONS	NA	Alkalinity, Total as CaCO3	190	mg/L	2.0	0.3		
WW-4-419	14-Dec-15	1512151000B	300.0	ANIONS	16887-00-6	Chloride	41.6	mg/L	2.0	1.0		
WW-4-419	14-Dec-15	1512151000B	300.0	ANIONS	16984-48-8	Fluoride, undistilled	0.8	mg/L	0.10	0.008		
WW-4-419	14-Dec-15	1512151000B	300.0	ANIONS	14808-79-8	Sulfate	357	mg/L	8.0	0.8		
WW-4-419	14-Dec-15	1512151015B	PARAMS	PARAMS	NA	Conductivity	1058	µS/cm	NA	NA		
WW-4-419	14-Dec-15	1512151015B	PARAMS	PARAMS	NA	pH	7.87	NA	NA	NA		
WW-4-419	14-Dec-15	1512151015B	PARAMS	PARAMS	NA	Temperature	16.1	ºC	NA	NA		
WW-4-419	14-Dec-15	1512151015B	PARAMS	PARAMS	NA	Transducer	NA	ft	NA	NA		
WW-4-419	14-Dec-15	1512151015B	PARAMS	PARAMS	NA	Turbidity	1.63	NTU	NA	NA		
WW-4-419	14-Dec-15	1512141100B	PARAMS	PARAMS	NA	Conductivity	1066	µS/cm	NA	NA		
WW-4-419	14-Dec-15	1512141100B	PARAMS	PARAMS	NA	pH	7.97	NA	NA	NA		
WW-4-419	14-Dec-15	1512141100B	PARAMS	PARAMS	NA	Temperature	16.5	ºC	NA	NA		
WW-4-419	14-Dec-15	1512141100B	PARAMS	PARAMS	NA	Transducer	88.2	ft	NA	NA		
WW-4-419	14-Dec-15	1512141100B	PARAMS	PARAMS	NA	Turbidity	1.81	NTU	NA	NA		
WW-4-419	14-Dec-15	1512141427B	6010C	METALS	7429-90-5	Aluminum, Total	ND	mg/L	0.10	0.010		
WW-4-419	14-Dec-15	1512141427B	6020A	METALS	7440-36-0	Antimony, Total	0.001	mg/L	0.0010	0.0004		J
WW-4-419	14-Dec-15	1512141427B	6020A	METALS	7440-38-2	Arsenic, Total	0.0013	mg/L	0.0010	0.0004		
WW-4-419	14-Dec-15	1512141427B	6010C	METALS	7440-39-3	Barium, Total	0.024	mg/L	0.020	0.002		
WW-4-419	14-Dec-15	1512141427B	6010C	METALS	7440-41-7	Beryllium, Total	ND	mg/L	0.0030	0.0002		
WW-4-419	14-Dec-15	1512141427B	6010C	METALS	7440-42-8	Boron, Total	0.14	mg/L	0.20	0.02		J
WW-4-419	14-Dec-15	1512141427B	6010C	METALS	7440-43-9	Cadmium, Total	ND	mg/L	0.0050	0.0002		
WW-4-419	14-Dec-15	1512141427B	6010C	METALS	7440-70-2	Calcium, Total	70.8	mg/L	1.0	0.2		
WW-4-419	14-Dec-15	1512141427B	6010C	METALS	7440-47-3	Chromium, Total	0.001	mg/L	0.010	0.0003		J
WW-4-419	14-Dec-15	1512141427B	6010C	METALS	7440-48-4	Cobalt, Total	ND	mg/L	0.050	0.002		
WW-4-419	14-Dec-15	1512141427B	6010C	METALS	7440-50-8	Copper, Total	ND	mg/L	0.020	0.003		
WW-4-419	14-Dec-15	1512141427B	6010C	METALS	7439-89-6	Iron, Total	ND	mg/L	0.10	0.009		
WW-4-419	14-Dec-15	1512141427B	6010C	METALS	7439-92-1	Lead, Total	0.005	mg/L	0.050	0.005		J
WW-4-419	14-Dec-15	1512141427B	6010C	METALS	7439-95-4	Magnesium, Total	38.4	mg/L	1.0	0.010		
WW-4-419	14-Dec-15	1512141427B	6010C	METALS	7439-96-5	Manganese, Total	0.002	mg/L	0.010	0.0010		J
WW-4-419	14-Dec-15	1512141427B	7470A	METALS	7439-97-6	Mercury, Total	ND	mg/L	0.00020	0.00004		
WW-4-419	14-Dec-15	1512141427B	6010C	METALS	7439-98-7	Molybdenum, Total	0.01	mg/L	0.025	0.002		J
WW-4-419	14-Dec-15	1512141427B	6010C	METALS	7440-02-0	Nickel, Total	0.015	mg/L	0.040	0.002		J
WW-4-419	14-Dec-15	1512141427B	6010C	METALS	7440-09-7	Potassium, Total	3.7	mg/L	2.0	0.05		
WW-4-419	14-Dec-15	1512141427B	6010C	METALS	7782-49-2	Selenium, Total	ND	mg/L	0.010	0.005		
WW-4-419	14-Dec-15	1512141427B	6010C	METALS	7440-22-4	Silver, Total	ND	mg/L	0.010	0.0006		
WW-4-419	14-Dec-15	1512141427B	6010C	METALS	7440-23-5	Sodium, Total	100	mg/L	1.0	0.09		

wellname	event_date	sample_number	spec_method	analysis	casno	analyte	result	units	PQL	MDL	extract effiency	qa_flag
WW-4-419	14-Dec-15	1512141427B	6010C	METALS	7440-24-6	Strontium, Total	2.03	mg/L	0.10	0.002		
WW-4-419	14-Dec-15	1512141427B	6020A	METALS	7440-28-0	Thallium, Total	ND	mg/L	0.0010	0.00003		
WW-4-419	14-Dec-15	1512141427B	6010C	METALS	7440-31-5	Tin, Total	ND	mg/L	0.50	0.02		
WW-4-419	14-Dec-15	1512141427B	6010C	METALS	7440-62-2	Vanadium, Total	0.012	mg/L	0.050	0.0010		J
WW-4-419	14-Dec-15	1512141427B	6010C	METALS	7440-66-6	Zinc, Total	0.045	mg/L	0.020	0.007		
WW-4-419	14-Dec-15	1512141105B	TAP 01-0408-031	607	314-40-9	Bromacil	ND	ug/L	0.0098	0.0049	96	
WW-4-419	14-Dec-15	1512141105B	TAP 01-0408-031	607	4164-28-7	N-Nitrodimethylamine	ND	ug/L	0.0098	0.0049	92	
WW-4-419	14-Dec-15	1512141105B	TAP 01-0408-031	607	62-75-9	N-Nitrosodimethylamine	ND	ug/L	0.0098	0.0049	75	
WW-4-419	14-Dec-15	1512141325B	TAP 01-0403-015	NDMA_LL	4164-28-7	N-Nitrodimethylamine	ND	ng/L	0.48	0.17		
WW-4-419	14-Dec-15	1512141325B	TAP 01-0403-015	NDMA_LL	62-75-9	N-Nitrosodimethylamine	2.5	ng/L	0.48	0.35		FB
WW-4-419	14-Dec-15	1512151006B	353.2	353.2	NA	Nitrate+Nitrite as Nitrogen	1.25	mg/L	0.050	0.003		
WW-4-419	14-Dec-15	1512151004B	6850	6850	14797-73-0	Perchlorate	0.34	ug/L	0.20	0.026		
WW-4-419	14-Dec-15	1512141327B	8270D	8270	95-94-3	1,2,4,5-Tetrachlorobenzene	ND	ug/L	9.4	1.9		
WW-4-419	14-Dec-15	1512141327B	8270D	8270	120-82-1	1,2,4-Trichlorobenzene	ND	ug/L	9.4	1.0		
WW-4-419	14-Dec-15	1512141327B	8270D	8270	95-50-1	1,2-Dichlorobenzene	ND	ug/L	9.4	1.0		
WW-4-419	14-Dec-15	1512141327B	8270D	8270	122-66-7	1,2-Diphenylhydrazine	ND	ug/L	9.4	1.0		
WW-4-419	14-Dec-15	1512141327B	8270D	8270	99-35-4	1,3,5-Trinitrobenzene	ND	ug/L	9.4	2.5		
WW-4-419	14-Dec-15	1512141327B	8270D	8270	541-73-1	1,3-Dichlorobenzene	ND	ug/L	9.4	1.0		
WW-4-419	14-Dec-15	1512141327B	8270D	8270	99-65-0	1,3-Dinitrobenzene	ND	ug/L	9.4	3.8		
WW-4-419	14-Dec-15	1512141327B	8270D	8270	106-46-7	1,4-Dichlorobenzene	ND	ug/L	9.4	1.0		
WW-4-419	14-Dec-15	1512141327B	8270D	8270	015176-21-3	1,4-Dioxane, 2,5-dimethyl-	11	ug/L	NA	NA		TIC
WW-4-419	14-Dec-15	1512141327B	8270D	8270	130-15-4	1,4-Naphthoquinone	ND	ug/L	47	2.9		
WW-4-419	14-Dec-15	1512141327B	8270D	8270	106-50-3	1,4-Phenylenediamine	ND	ug/L	47	NA		*
WW-4-419	14-Dec-15	1512141327B	8270D	8270	90-12-0	1-Methylnaphthalene	ND	ug/L	9.4	1.4		
WW-4-419	14-Dec-15	1512141327B	8270D	8270	134-32-7	1-Naphthylamine	ND	ug/L	47	9.2		
WW-4-419	14-Dec-15	1512141327B	8270D	8270	58-90-2	2,3,4,6-Tetrachlorophenol	ND	ug/L	9.4	2.0		
WW-4-419	14-Dec-15	1512141327B	8270D	8270	95-95-4	2,4,5-Trichlorophenol	ND	ug/L	9.4	1.8		
WW-4-419	14-Dec-15	1512141327B	8270D	8270	88-06-2	2,4,6-Trichlorophenol	ND	ug/L	9.4	1.4		
WW-4-419	14-Dec-15	1512141327B	8270D	8270	120-83-2	2,4-Dichlorophenol	ND	ug/L	9.4	1.3		
WW-4-419	14-Dec-15	1512141327B	8270D	8270	105-67-9	2,4-Dimethylphenol	ND	ug/L	9.4	1.5		
WW-4-419	14-Dec-15	1512141327B	8270D	8270	51-28-5	2,4-Dinitrophenol	ND	ug/L	47	20		
WW-4-419	14-Dec-15	1512141327B	8270D	8270	121-14-2	2,4-Dinitrotoluene	ND	ug/L	9.4	1.6		
WW-4-419	14-Dec-15	1512141327B	8270D	8270	87-65-0	2,6-Dichlorophenol	ND	ug/L	9.4	1.0		

wellname	event_date	sample_number	spec_method	analysis	casno	analyte	result	units	PQL	MDL	extract effiency	qa_flag
WW-4-419	14-Dec-15	1512141327B	8270D	8270	606-20-2	2,6-Dinitrotoluene	ND	ug/L	9.4	1.8		
WW-4-419	14-Dec-15	1512141327B	8270D	8270	53-96-3	2-Acetylaminofluorene	ND	ug/L	9.4	1.0		
WW-4-419	14-Dec-15	1512141327B	8270D	8270	91-58-7	2-Chloronaphthalene	ND	ug/L	9.4	1.0		
WW-4-419	14-Dec-15	1512141327B	8270D	8270	95-57-8	2-Chlorophenol	ND	ug/L	9.4	1.0		
WW-4-419	14-Dec-15	1512141327B	8270D	8270	99-55-8	2-Methyl-5-nitroaniline (5-Nitro-o-toluidine)	ND	ug/L	9.4	1.8		
WW-4-419	14-Dec-15	1512141327B	8270D	8270	91-57-6	2-Methylnaphthalene	ND	ug/L	9.4	1.0		
WW-4-419	14-Dec-15	1512141327B	8270D	8270	95-48-7	2-Methylphenol	ND	ug/L	9.4	1.0		
WW-4-419	14-Dec-15	1512141327B	8270D	8270	91-59-8	2-Naphthylamine	ND	ug/L	47	5.1		
WW-4-419	14-Dec-15	1512141327B	8270D	8270	88-74-4	2-Nitroaniline	ND	ug/L	47	9.1		
WW-4-419	14-Dec-15	1512141327B	8270D	8270	88-75-5	2-Nitrophenol	ND	ug/L	9.4	1.4		
WW-4-419	14-Dec-15	1512141327B	8270D	8270	109-06-8	2-Picoline	ND	ug/L	9.4	1.8		
WW-4-419	14-Dec-15	1512141327B	8270D	8270	15831-10-4	3- and 4-Methylphenol Coelution	ND	ug/L	9.4	2.0		
WW-4-419	14-Dec-15	1512141327B	8270D	8270	91-94-1	3,3'-Dichlorobenzidine	ND	ug/L	9.4	4.5		
WW-4-419	14-Dec-15	1512141327B	8270D	8270	119-93-7	3,3'-Dimethylbenzidine	ND	ug/L	47	19		
WW-4-419	14-Dec-15	1512141327B	8270D	8270	56-49-5	3-Methylcholanthrene	ND	ug/L	9.4	1.0		
WW-4-419	14-Dec-15	1512141327B	8270D	8270	99-09-2	3-Nitroaniline	ND	ug/L	47	7.7		
WW-4-419	14-Dec-15	1512141327B	8270D	8270	534-52-1	4,6-Dinitro-2-methylphenol	ND	ug/L	47	11		
WW-4-419	14-Dec-15	1512141327B	8270D	8270	92-67-1	4-Aminobiphenyl	ND	ug/L	47	6.9		
WW-4-419	14-Dec-15	1512141327B	8270D	8270	101-55-3	4-Bromophenyl Phenyl Ether	ND	ug/L	9.4	2.2		
WW-4-419	14-Dec-15	1512141327B	8270D	8270	59-50-7	4-Chloro-3-methylphenol	ND	ug/L	9.4	1.2		
WW-4-419	14-Dec-15	1512141327B	8270D	8270	7005-72-3	4-Chlorophenyl Phenyl Ether	ND	ug/L	9.4	1.2		
WW-4-419	14-Dec-15	1512141327B	8270D	8270	000503-86-6	4H-Imidazol-4-one, 2-amino-1,5-dihydro-	39	ug/L	NA	NA		TIC RB
WW-4-419	14-Dec-15	1512141327B	8270D	8270	100-01-6	4-Nitroaniline	ND	ug/L	47	7.8		
WW-4-419	14-Dec-15	1512141327B	8270D	8270	100-02-7	4-Nitrophenol	ND	ug/L	47	5.9		
WW-4-419	14-Dec-15	1512141327B	8270D	8270	56-57-5	4-Nitroquinoline N-Oxide	ND	ug/L	47	11		
WW-4-419	14-Dec-15	1512141327B	8270D	8270	57-97-6	7,12-Dimethylbenz(a)anthracene	ND	ug/L	9.4	1.0		
WW-4-419	14-Dec-15	1512141327B	8270D	8270	122-09-8	a,a-Dimethylphenethylamine	ND	ug/L	47	4.3		
WW-4-419	14-Dec-15	1512141327B	8270D	8270	83-32-9	Acenaphthene	ND	ug/L	9.4	1.0		
WW-4-419	14-Dec-15	1512141327B	8270D	8270	208-96-8	Acenaphthylene	ND	ug/L	9.4	1.0		
WW-4-419	14-Dec-15	1512141327B	8270D	8270	208-96-8	Acenaphthylene	ND	ug/L	0.19	0.050		
WW-4-419	14-Dec-15	1512141327B	8270D	8270	98-86-2	Acetophenone	ND	ug/L	9.4	1.6		
WW-4-419	14-Dec-15	1512141327B	8270D	8270	62-53-3	Aniline	ND	ug/L	9.4	2.0		
WW-4-419	14-Dec-15	1512141327B	8270D	8270	120-12-7	Anthracene	ND	ug/L	9.4	1.0		

wellname	event_date	sample_number	spec_method	analysis	casno	analyte	result	units	PQL	MDL	extract effiency	qa_flag
WW-4-419	14-Dec-15	1512141327B	8270D	8270	140-57-8	Aramite, Total	ND	ug/L	47	9.5		
WW-4-419	14-Dec-15	1512141327B	8270D	8270	56-55-3	Benz(a)anthracene	ND	ug/L	0.19	0.050		
WW-4-419	14-Dec-15	1512141327B	8270D	8270	003622-84-2	Benzenesulfonamide, N-butyl-	6.7	ug/L	NA	NA		TIC
WW-4-419	14-Dec-15	1512141327B	8270D	8270	92-87-5	Benzidine	ND	ug/L	94	90		
WW-4-419	14-Dec-15	1512141327B	8270D	8270	50-32-8	Benzo(a)pyrene	ND	ug/L	0.19	0.050		
WW-4-419	14-Dec-15	1512141327B	8270D	8270	205-99-2	Benzo(b)fluoranthene	ND	ug/L	0.19	0.050		
WW-4-419	14-Dec-15	1512141327B	8270D	8270	191-24-2	Benzo(g,h,i)perylene	ND	ug/L	9.4	1.0		
WW-4-419	14-Dec-15	1512141327B	8270D	8270	207-08-9	Benzo(k)fluoranthene	ND	ug/L	0.19	0.050		
WW-4-419	14-Dec-15	1512141327B	8270D	8270	100-51-6	Benzyl Alcohol	ND	ug/L	9.4	1.3		
WW-4-419	14-Dec-15	1512141327B	8270D	8270	108-60-1	Bis(1-chloroisopropyl) Ether	ND	ug/L	9.4	1.0		
WW-4-419	14-Dec-15	1512141327B	8270D	8270	111-91-1	Bis(2-chloroethoxy)methane	ND	ug/L	9.4	2.2		
WW-4-419	14-Dec-15	1512141327B	8270D	8270	111-44-4	Bis(2-chloroethyl) Ether	ND	ug/L	9.4	1.3		
WW-4-419	14-Dec-15	1512141327B	8270D	8270	117-81-7	Bis(2-ethylhexyl) Phthalate	ND	ug/L	4.7	0.57		
WW-4-419	14-Dec-15	1512141327B	8270D	8270	85-68-7	Butyl Benzyl Phthalate	ND	ug/L	9.4	2.4		
WW-4-419	14-Dec-15	1512141327B	8270D	8270	510-15-6	Chlorobenzilate	ND	ug/L	9.4	1.0		
WW-4-419	14-Dec-15	1512141327B	8270D	8270	218-01-9	Chrysene	ND	ug/L	0.19	0.050		
WW-4-419	14-Dec-15	1512141327B	8270D	8270	2303-16-4	Diallate	ND	ug/L	9.4	1.3		
WW-4-419	14-Dec-15	1512141327B	8270D	8270	53-70-3	Dibenz(a,h)anthracene	ND	ug/L	0.19	0.050		
WW-4-419	14-Dec-15	1512141327B	8270D	8270	132-64-9	Dibenzofuran	ND	ug/L	9.4	1.0		
WW-4-419	14-Dec-15	1512141327B	8270D	8270	84-66-2	Diethyl Phthalate	ND	ug/L	9.4	1.0		
WW-4-419	14-Dec-15	1512141327B	8270D	8270	60-51-5	Dimethoate	ND	ug/L	47	8.7		
WW-4-419	14-Dec-15	1512141327B	8270D	8270	131-11-3	Dimethyl Phthalate	ND	ug/L	9.4	1.0		
WW-4-419	14-Dec-15	1512141327B	8270D	8270	84-74-2	Di-n-butyl Phthalate	ND	ug/L	9.4	1.0		
WW-4-419	14-Dec-15	1512141327B	8270D	8270	117-84-0	Di-n-octyl Phthalate	ND	ug/L	9.4	1.2		
WW-4-419	14-Dec-15	1512141327B	8270D	8270	122-39-4	Diphenylamine	ND	ug/L	9.4	NA		*
WW-4-419	14-Dec-15	1512141327B	8270D	8270	298-04-4	Disulfoton	ND	ug/L	9.4	1.2		
WW-4-419	14-Dec-15	1512141327B	8270D	8270	62-50-0	Ethyl Methanesulfonate	ND	ug/L	9.4	1.0		
WW-4-419	14-Dec-15	1512141327B	8270D	8270	206-44-0	Fluoranthene	ND	ug/L	9.4	1.0		
WW-4-419	14-Dec-15	1512141327B	8270D	8270	86-73-7	Fluorene	ND	ug/L	9.4	1.0		
WW-4-419	14-Dec-15	1512141327B	8270D	8270	000068-12-2	Formamide, N,N-dimethyl-	15	ug/L	NA	NA		TIC
WW-4-419	14-Dec-15	1512141327B	8270D	8270	118-74-1	Hexachlorobenzene	ND	ug/L	0.19	0.050		
WW-4-419	14-Dec-15	1512141327B	8270D	8270	87-68-3	Hexachlorobutadiene	ND	ug/L	9.4	1.3		
WW-4-419	14-Dec-15	1512141327B	8270D	8270	77-47-4	Hexachlorocyclopentadiene	ND	ug/L	9.4	1.0		
WW-4-419	14-Dec-15	1512141327B	8270D	8270	67-72-1	Hexachloroethane	ND	ug/L	9.4	1.2		
WW-4-419	14-Dec-15	1512141327B	8270D	8270	70-30-4	Hexachlorophene	ND	ug/L	470	55		
WW-4-419	14-Dec-15	1512141327B	8270D	8270	1888-71-7	Hexachloropropene	ND	ug/L	9.4	1.0		

wellname	event_date	sample_number	spec_method	analysis	casno	analyte	result	units	PQL	MDL	extract effiency	qa_flag
WW-4-419	14-Dec-15	1512141327B	8270D	8270	193-39-5	Indeno(1,2,3-cd)pyrene	ND	ug/L	0.19	0.050		
WW-4-419	14-Dec-15	1512141327B	8270D	8270	465-73-6	Isodrin	ND	ug/L	9.4	1.8		
WW-4-419	14-Dec-15	1512141327B	8270D	8270	78-59-1	Isophorone	ND	ug/L	9.4	1.0		
WW-4-419	14-Dec-15	1512141327B	8270D	8270	120-58-1	Isosafrole	ND	ug/L	9.4	3.8		
WW-4-419	14-Dec-15	1512141327B	8270D	8270	91-80-5	Methapyrilene	ND	ug/L	47	26		
WW-4-419	14-Dec-15	1512141327B	8270D	8270	66-27-3	Methyl Methanesulfonate	ND	ug/L	9.4	1.0		
WW-4-419	14-Dec-15	1512141327B	8270D	8270	298-00-0	Methyl Parathion	ND	ug/L	9.4	1.3		
WW-4-419	14-Dec-15	1512141327B	8270D	8270	91-20-3	Naphthalene	ND	ug/L	9.4	1.0		
WW-4-419	14-Dec-15	1512141327B	8270D	8270	98-95-3	Nitrobenzene	ND	ug/L	9.4	1.6		
WW-4-419	14-Dec-15	1512141327B	8270D	8270	55-18-5	N-Nitrosodiethylamine	ND	ug/L	9.4	1.0		
WW-4-419	14-Dec-15	1512141327B	8270D	8270	62-75-9	N-Nitrosodimethylamine	ND	ug/L	9.4	1.0		
WW-4-419	14-Dec-15	1512141327B	8270D	8270	86-30-6	N-Nitrosodiphenylamine	ND	ug/L	9.4	1.0		
WW-4-419	14-Dec-15	1512141327B	8270D	8270	10595-95-6	N-Nitrosomethylethylamine	ND	ug/L	9.4	1.8		
WW-4-419	14-Dec-15	1512141327B	8270D	8270	59-89-2	N-Nitrosomorpholine	ND	ug/L	9.4	1.2		
WW-4-419	14-Dec-15	1512141327B	8270D	8270	621-64-7	N-Nitroso-N-Dipropylamine	ND	ug/L	9.4	1.3		
WW-4-419	14-Dec-15	1512141327B	8270D	8270	100-75-4	N-Nitrosopiperidine	ND	ug/L	9.4	1.1		
WW-4-419	14-Dec-15	1512141327B	8270D	8270	930-55-2	N-Nitrosopyrrolidine	ND	ug/L	9.4	1.0		
WW-4-419	14-Dec-15	1512141327B	8270D	8270	126-68-1	O,O,O-Triethyl Phosphorothioate	ND	ug/L	9.4	2.0		
WW-4-419	14-Dec-15	1512141327B	8270D	8270	95-53-4	o-Toluidine	ND	ug/L	9.4	2.1		
WW-4-419	14-Dec-15	1512141327B	8270D	8270	56-38-2	Parathion	ND	ug/L	9.4	1.7		
WW-4-419	14-Dec-15	1512141327B	8270D	8270	106-47-8	p-Chloroaniline	ND	ug/L	9.4	1.5		
WW-4-419	14-Dec-15	1512141327B	8270D	8270	60-11-7	p-Dimethylaminoazobenzene	ND	ug/L	9.4	1.0		
WW-4-419	14-Dec-15	1512141327B	8270D	8270	608-93-5	Pentachlorobenzene	ND	ug/L	9.4	1.0		
WW-4-419	14-Dec-15	1512141327B	8270D	8270	76-01-7	Pentachloroethane	ND	ug/L	9.4	1.7		
WW-4-419	14-Dec-15	1512141327B	8270D	8270	82-68-8	Pentachloronitrobenzene (PCNB)	ND	ug/L	9.4	1.5		
WW-4-419	14-Dec-15	1512141327B	8270D	8270	62-44-2	Phenacetin	ND	ug/L	9.4	1.8		
WW-4-419	14-Dec-15	1512141327B	8270D	8270	85-01-8	Phenanthrene	ND	ug/L	9.4	1.0		
WW-4-419	14-Dec-15	1512141327B	8270D	8270	108-95-2	Phenol	ND	ug/L	9.4	1.0		
WW-4-419	14-Dec-15	1512141327B	8270D	8270	298-02-2	Phorate	ND	ug/L	9.4	1.0		
WW-4-419	14-Dec-15	1512141327B	8270D	8270	23950-58-5	Pronamide	ND	ug/L	9.4	1.3		
WW-4-419	14-Dec-15	1512141327B	8270D	8270	129-00-0	Pyrene	ND	ug/L	9.4	1.0		
WW-4-419	14-Dec-15	1512141327B	8270D	8270	110-86-1	Pyridine	ND	ug/L	47	16		
WW-4-419	14-Dec-15	1512141327B	8270D	8270	94-59-7	Safrole	ND	ug/L	9.4	1.1		
WW-4-419	14-Dec-15	1512141327B	8270D	8270	3689-24-5	Sulfotep	ND	ug/L	9.4	2.0		

wellname	event_date	sample_number	spec_method	analysis	casno	analyte	result	units	PQL	MDL	extract effiency	qa_flag
WW-4-419	14-Dec-15	1512141327B	8270D	8270	297-97-2	Thionazin	ND	ug/L	9.4	1.8		
WW-4-419	14-Dec-15	1512151002B	SM 2540 C-1997(20	SM2540C	NA	Total Dissolved Solids (TDS)	684	mg/L	10	4		
WW-4-419	14-Dec-15	1512141322B	8260C	8260_LL	630-20-6	1,1,1,2-Tetrachloroethane	ND	ug/L	0.50	0.20		
WW-4-419	14-Dec-15	1512141322B	8260C	8260_LL	71-55-6	1,1,1-Trichloroethane (TCA)	ND	ug/L	0.50	0.36		
WW-4-419	14-Dec-15	1512141322B	8260C	8260_LL	79-34-5	1,1,2,2-Tetrachloroethane	ND	ug/L	0.50	0.20		
WW-4-419	14-Dec-15	1512141322B	8260C	8260_LL	76-13-1	1,1,2-Trichloro-1,2,2-Trifluoroethane	ND	ug/L	0.50	0.31		
WW-4-419	14-Dec-15	1512141322B	8260C	8260_LL	79-00-5	1,1,2-Trichloroethane	ND	ug/L	0.50	0.23		
WW-4-419	14-Dec-15	1512141322B	8260C	8260_LL	75-34-3	1,1-Dichloroethane (1,1-DCA)	ND	ug/L	0.50	0.20		
WW-4-419	14-Dec-15	1512141322B	8260C	8260_LL	75-35-4	1,1-Dichloroethene	ND	ug/L	0.50	0.28		
WW-4-419	14-Dec-15	1512141322B	8260C	8260_LL	96-18-4	1,2,3-Trichloropropane	ND	ug/L	0.50	0.32		
WW-4-419	14-Dec-15	1512141322B	8260C	8260_LL	96-12-8	1,2-Dibromo-3-chloropropane (DBCP)	ND	ug/L	1.0	0.74		
WW-4-419	14-Dec-15	1512141322B	8260C	8260_LL	106-93-4	1,2-Dibromoethane	ND	ug/L	0.50	0.24		
WW-4-419	14-Dec-15	1512141322B	8260C	8260_LL	354-23-4	1,2-Dichloro-1,1,2-trifluoroethane (CFC 123a)	ND	ug/L	0.50	0.20		
WW-4-419	14-Dec-15	1512141322B	8260C	8260_LL	107-06-2	1,2-Dichloroethane	ND	ug/L	0.50	0.20		
WW-4-419	14-Dec-15	1512141322B	8260C	8260_LL	78-87-5	1,2-Dichloropropane	ND	ug/L	0.50	0.20		
WW-4-419	14-Dec-15	1512141322B	8260C	8260_LL	123-91-1	1,4-Dioxane	ND	ug/L	40	18		
WW-4-419	14-Dec-15	1512141322B	8260C	8260_LL	306-83-2	2,2-Dichloro-1,1,1-trifluoroethane (CFC 123)	ND	ug/L	0.50	0.32		
WW-4-419	14-Dec-15	1512141322B	8260C	8260_LL	78-93-3	2-Butanone (MEK)	ND	ug/L	5.0	0.81		
WW-4-419	14-Dec-15	1512141322B	8260C	8260_LL	126-99-8	2-Chloro-1,3-butadiene	ND	ug/L	0.50	0.22		
WW-4-419	14-Dec-15	1512141322B	8260C	8260_LL	591-78-6	2-Hexanone	ND	ug/L	5.0	0.73		
WW-4-419	14-Dec-15	1512141322B	8260C	8260_LL	78-83-1	2-Methyl-1-propanol (Isobutyl Alcohol)	ND	ug/L	100	8.1		
WW-4-419	14-Dec-15	1512141322B	8260C	8260_LL	67-63-0	2-Propanol	ND	ug/L	40	8.6		
WW-4-419	14-Dec-15	1512141322B	8260C	8260_LL	107-05-1	3-Chloro-1-propene (Allyl Chloride)	ND	ug/L	0.50	0.25		
WW-4-419	14-Dec-15	1512141322B	8260C	8260_LL	108-10-1	4-Methyl-2-pentanone	ND	ug/L	2.0	0.20		
WW-4-419	14-Dec-15	1512141322B	8260C	8260_LL	67-64-1	Acetone	14	ug/L	5.0	1.3		
WW-4-419	14-Dec-15	1512141322B	8260C	8260_LL	75-05-8	Acetonitrile	ND	ug/L	25	3.7		
WW-4-419	14-Dec-15	1512141322B	8260C	8260_LL	107-02-8	Acrolein	ND	ug/L	5.0	3.0		
WW-4-419	14-Dec-15	1512141322B	8260C	8260_LL	107-13-1	Acrylonitrile	ND	ug/L	2.5	0.78		
WW-4-419	14-Dec-15	1512141322B	8260C	8260_LL	71-43-2	Benzene	ND	ug/L	0.50	0.20		
WW-4-419	14-Dec-15	1512141322B	8260C	8260_LL	75-27-4	Bromodichloromethane	ND	ug/L	0.50	0.32		
WW-4-419	14-Dec-15	1512141322B	8260C	8260_LL	75-25-2	Bromoform	ND	ug/L	1.0	0.21		

wellname	event_date	sample_number	spec_method	analysis	casno	analyte	result	units	PQL	MDL	extract effiency	qa_flag
WW-4-419	14-Dec-15	1512141322B	8260C	8260_LL	74-83-9	Bromomethane	0.24	ug/L	0.50	0.24		J RB
WW-4-419	14-Dec-15	1512141322B	8260C	8260_LL	75-15-0	Carbon Disulfide	ND	ug/L	0.50	0.20		
WW-4-419	14-Dec-15	1512141322B	8260C	8260_LL	56-23-5	Carbon Tetrachloride	ND	ug/L	0.50	0.45		
WW-4-419	14-Dec-15	1512141322B	8260C	8260_LL	108-90-7	Chlorobenzene	ND	ug/L	0.50	0.20		
WW-4-419	14-Dec-15	1512141322B	8260C	8260_LL	75-00-3	Chloroethane	ND	ug/L	0.50	0.22		
WW-4-419	14-Dec-15	1512141322B	8260C	8260_LL	67-66-3	Chloroform	ND	ug/L	0.50	0.20		
WW-4-419	14-Dec-15	1512141322B	8260C	8260_LL	74-87-3	Chloromethane	ND	ug/L	0.50	0.20		
WW-4-419	14-Dec-15	1512141322B	8260C	8260_LL	156-59-2	cis-1,2-Dichloroethene	ND	ug/L	0.50	0.20		
WW-4-419	14-Dec-15	1512141322B	8260C	8260_LL	10061-01-5	cis-1,3-Dichloropropene	ND	ug/L	0.50	0.20		
WW-4-419	14-Dec-15	1512141322B	8260C	8260_LL	110-82-7	Cyclohexane	ND	ug/L	1.0	0.25		
WW-4-419	14-Dec-15	1512141322B	8260C	8260_LL	124-48-1	Dibromochloromethane	ND	ug/L	0.50	0.20		
WW-4-419	14-Dec-15	1512141322B	8260C	8260_LL	74-95-3	Dibromomethane	ND	ug/L	0.50	0.22		
WW-4-419	14-Dec-15	1512141322B	8260C	8260_LL	75-71-8	Dichlorodifluoromethane (CFC 12)	ND	ug/L	0.50	0.21		
WW-4-419	14-Dec-15	1512141322B	8260C	8260_LL	75-43-4	Dichlorofluoromethane (CFC 21)	ND	ug/L	0.50	0.20		
WW-4-419	14-Dec-15	1512141322B	8260C	8260_LL	75-09-2	Dichloromethane	ND	ug/L	0.50	0.20		
WW-4-419	14-Dec-15	1512141322B	8260C	8260_LL	97-63-2	Ethyl Methacrylate	ND	ug/L	0.50	0.20		
WW-4-419	14-Dec-15	1512141322B	8260C	8260_LL	100-41-4	Ethylbenzene	ND	ug/L	0.50	0.20		
WW-4-419	14-Dec-15	1512141322B	8260C	8260_LL	74-88-4	Iodomethane	ND	ug/L	5.0	0.27		
WW-4-419	14-Dec-15	1512141322B	8260C	8260_LL	179601-23-1	m,p-Xylenes	ND	ug/L	1.0	0.26		
WW-4-419	14-Dec-15	1512141322B	8260C	8260_LL	126-98-7	Methacrylonitrile	ND	ug/L	1.0	0.50		
WW-4-419	14-Dec-15	1512141322B	8260C	8260_LL	80-62-6	Methyl Methacrylate	ND	ug/L	0.50	0.39		
WW-4-419	14-Dec-15	1512141322B	8260C	8260_LL	1634-04-4	Methyl tert-Butyl Ether	ND	ug/L	0.50	0.20		
WW-4-419	14-Dec-15	1512141322B	8260C	8260_LL	108-87-2	Methylcyclohexane	ND	ug/L	1.0	0.27		
WW-4-419	14-Dec-15	1512141322B	8260C	8260_LL	95-47-6	o-Xylene	ND	ug/L	0.50	0.20		
WW-4-419	14-Dec-15	1512141322B	8260C	8260_LL	107-12-0	Propionitrile	ND	ug/L	2.5	1.7		
WW-4-419	14-Dec-15	1512141322B	8260C	8260_LL	100-42-5	Styrene	ND	ug/L	0.50	0.20		
WW-4-419	14-Dec-15	1512141322B	8260C	8260_LL	127-18-4	Tetrachloroethene (PCE)	ND	ug/L	0.50	0.20		
WW-4-419	14-Dec-15	1512141322B	8260C	8260_LL	109-99-9	Tetrahydrofuran (THF)	ND	ug/L	5.0	0.66		
WW-4-419	14-Dec-15	1512141322B	8260C	8260_LL	108-88-3	Toluene	1.9	ug/L	0.50	0.20		
WW-4-419	14-Dec-15	1512141322B	8260C	8260_LL	156-60-5	trans-1,2-Dichloroethene	ND	ug/L	0.50	0.20		
WW-4-419	14-Dec-15	1512141322B	8260C	8260_LL	10061-02-6	trans-1,3-Dichloropropene	ND	ug/L	0.50	0.20		
WW-4-419	14-Dec-15	1512141322B	8260C	8260_LL	110-57-6	trans-1,4-Dichloro-2-butene	ND	ug/L	0.52	0.52		
WW-4-419	14-Dec-15	1512141322B	8260C	8260_LL	79-01-6	Trichloroethene (TCE)	ND	ug/L	0.50	0.20		
WW-4-419	14-Dec-15	1512141322B	8260C	8260_LL	75-69-4	Trichlorofluoromethane (CFC 11)	ND	ug/L	0.50	0.20		

wellname	event_date	sample_number	spec_method	analysis	casno	analyte	result	units	PQL	MDL	extract effiency	qa_flag
WW-4-419	14-Dec-15	1512141322B	8260C	8260_LL	TIC	unknown	6.8	ug/L	NA	NA		J TIC
WW-4-419	14-Dec-15	1512141322B	8260C	8260_LL	108-05-4	Vinyl Acetate	ND	ug/L	1.0	0.78		
WW-4-419	14-Dec-15	1512141322B	8260C	8260_LL	75-01-4	Vinyl Chloride	ND	ug/L	0.50	0.22		
WW-4-589	14-Dec-15	1512151019B	SM 2320 B-1997(20	ANIONS	NA	Alkalinity, Total as CaCO3	192	mg/L	2.0	0.3		
WW-4-589	14-Dec-15	1512151019B	300.0	ANIONS	16887-00-6	Chloride	42.2	mg/L	2.0	1.0		
WW-4-589	14-Dec-15	1512151019B	300.0	ANIONS	16984-48-8	Fluoride, undistilled	0.59	mg/L	0.10	0.008		
WW-4-589	14-Dec-15	1512151019B	300.0	ANIONS	14808-79-8	Sulfate	359	mg/L	8.0	0.8		
WW-4-589	14-Dec-15	1512151030B	PARAMS	PARAMS	NA	Conductivity	1052	µS/cm	NA	NA		
WW-4-589	14-Dec-15	1512151030B	PARAMS	PARAMS	NA	pH	6.92	NA	NA	NA		
WW-4-589	14-Dec-15	1512151030B	PARAMS	PARAMS	NA	Temperature	16.9	ºC	NA	NA		
WW-4-589	14-Dec-15	1512151030B	PARAMS	PARAMS	NA	Transducer	NA	ft	NA	NA		
WW-4-589	14-Dec-15	1512151030B	PARAMS	PARAMS	NA	Turbidity	1.09	NTU	NA	NA		
WW-4-589	14-Dec-15	1512141110B	PARAMS	PARAMS	NA	Conductivity	1047	µS/cm	NA	NA		
WW-4-589	14-Dec-15	1512141110B	PARAMS	PARAMS	NA	pH	6.87	NA	NA	NA		
WW-4-589	14-Dec-15	1512141110B	PARAMS	PARAMS	NA	Temperature	16.3	ºC	NA	NA		
WW-4-589	14-Dec-15	1512141110B	PARAMS	PARAMS	NA	Transducer	88.2	ft	NA	NA		
WW-4-589	14-Dec-15	1512141110B	PARAMS	PARAMS	NA	Turbidity	1.51	NTU	NA	NA		
WW-4-589	14-Dec-15	1512151017B	6010C	METALS	7429-90-5	Aluminum, Total	ND	mg/L	0.10	0.010		
WW-4-589	14-Dec-15	1512151017B	6020A	METALS	7440-36-0	Antimony, Total	0.0009	mg/L	0.0010	0.0004		J
WW-4-589	14-Dec-15	1512151017B	6020A	METALS	7440-38-2	Arsenic, Total	0.0014	mg/L	0.0010	0.0004		
WW-4-589	14-Dec-15	1512151017B	6010C	METALS	7440-39-3	Barium, Total	0.029	mg/L	0.020	0.002		
WW-4-589	14-Dec-15	1512151017B	6010C	METALS	7440-41-7	Beryllium, Total	ND	mg/L	0.0030	0.0002		
WW-4-589	14-Dec-15	1512151017B	6010C	METALS	7440-42-8	Boron, Total	0.11	mg/L	0.20	0.02		J
WW-4-589	14-Dec-15	1512151017B	6010C	METALS	7440-43-9	Cadmium, Total	ND	mg/L	0.0050	0.0002		
WW-4-589	14-Dec-15	1512151017B	6010C	METALS	7440-70-2	Calcium, Total	78.9	mg/L	1.0	0.2		
WW-4-589	14-Dec-15	1512151017B	6010C	METALS	7440-47-3	Chromium, Total	0.0008	mg/L	0.010	0.0003		J
WW-4-589	14-Dec-15	1512151017B	6010C	METALS	7440-48-4	Cobalt, Total	ND	mg/L	0.050	0.002		
WW-4-589	14-Dec-15	1512151017B	6010C	METALS	7440-50-8	Copper, Total	ND	mg/L	0.020	0.003		
WW-4-589	14-Dec-15	1512151017B	6010C	METALS	7439-89-6	Iron, Total	ND	mg/L	0.10	0.009		
WW-4-589	14-Dec-15	1512151017B	6010C	METALS	7439-92-1	Lead, Total	ND	mg/L	0.050	0.005		
WW-4-589	14-Dec-15	1512151017B	6010C	METALS	7439-95-4	Magnesium, Total	46	mg/L	1.0	0.010		
WW-4-589	14-Dec-15	1512151017B	6010C	METALS	7439-96-5	Manganese, Total	0.021	mg/L	0.010	0.0010		
WW-4-589	14-Dec-15	1512151017B	7470A	METALS	7439-97-6	Mercury, Total	ND	mg/L	0.00020	0.00004		
WW-4-589	14-Dec-15	1512151017B	6010C	METALS	7439-98-7	Molybdenum, Total	0.007	mg/L	0.025	0.002		J
WW-4-589	14-Dec-15	1512151017B	6010C	METALS	7440-02-0	Nickel, Total	0.014	mg/L	0.040	0.002		J
WW-4-589	14-Dec-15	1512151017B	6010C	METALS	7440-09-7	Potassium, Total	4.1	mg/L	2.0	0.05		

wellname	event_date	sample_number	spec_method	analysis	casno	analyte	result	units	PQL	MDL	extract effiency	qa_flag
WW-4-589	14-Dec-15	1512151017B	6010C	METALS	7782-49-2	Selenium, Total	ND	mg/L	0.010	0.005		
WW-4-589	14-Dec-15	1512151017B	6010C	METALS	7440-22-4	Silver, Total	ND	mg/L	0.010	0.0006		
WW-4-589	14-Dec-15	1512151017B	6010C	METALS	7440-23-5	Sodium, Total	76.9	mg/L	1.0	0.09		
WW-4-589	14-Dec-15	1512151017B	6010C	METALS	7440-24-6	Strontium, Total	2.31	mg/L	0.10	0.002		
WW-4-589	14-Dec-15	1512151017B	6020A	METALS	7440-28-0	Thallium, Total	ND	mg/L	0.0010	0.00003		
WW-4-589	14-Dec-15	1512151017B	6010C	METALS	7440-31-5	Tin, Total	ND	mg/L	0.50	0.02		
WW-4-589	14-Dec-15	1512151017B	6010C	METALS	7440-62-2	Vanadium, Total	0.009	mg/L	0.050	0.0010		J RB
WW-4-589	14-Dec-15	1512151017B	6010C	METALS	7440-66-6	Zinc, Total	0.019	mg/L	0.020	0.007		J
WW-4-589	14-Dec-15	1512141112B	TAP 01-0408-031	607	314-40-9	Bromacil	ND	ug/L	0.0094	0.0047	96	
WW-4-589	14-Dec-15	1512141112B	TAP 01-0408-031	607	4164-28-7	N-Nitrodimethylamine	ND	ug/L	0.0094	0.0047	92	
WW-4-589	14-Dec-15	1512141112B	TAP 01-0408-031	607	62-75-9	N-Nitrosodimethylamine	ND	ug/L	0.0094	0.0047	75	
WW-4-589	14-Dec-15	1512141340B	TAP 01-0403-015	NDMA_LL	4164-28-7	N-Nitrodimethylamine	1.3	ng/L	0.48	0.17		
WW-4-589	14-Dec-15	1512141340B	TAP 01-0403-015	NDMA_LL	62-75-9	N-Nitrosodimethylamine	5.6	ng/L	0.48	0.35		TB
WW-4-589	14-Dec-15	1512151027B	353.2	353.2	NA	Nitrate+Nitrite as Nitrogen	0.793	mg/L	0.050	0.003		
WW-4-589	14-Dec-15	1512151025B	6850	6850	14797-73-0	Perchlorate	0.28	ug/L	0.20	0.026		
WW-4-589	14-Dec-15	1512141341B	8270D	8270	95-94-3	1,2,4,5-Tetrachlorobenzene	ND	ug/L	9.4	1.9		
WW-4-589	14-Dec-15	1512141341B	8270D	8270	120-82-1	1,2,4-Trichlorobenzene	ND	ug/L	9.4	1.0		
WW-4-589	14-Dec-15	1512141341B	8270D	8270	95-50-1	1,2-Dichlorobenzene	ND	ug/L	9.4	1.0		
WW-4-589	14-Dec-15	1512141341B	8270D	8270	122-66-7	1,2-Diphenylhydrazine	ND	ug/L	9.4	1.0		
WW-4-589	14-Dec-15	1512141341B	8270D	8270	99-35-4	1,3,5-Trinitrobenzene	ND	ug/L	9.4	2.5		
WW-4-589	14-Dec-15	1512141341B	8270D	8270	541-73-1	1,3-Dichlorobenzene	ND	ug/L	9.4	1.0		
WW-4-589	14-Dec-15	1512141341B	8270D	8270	99-65-0	1,3-Dinitrobenzene	ND	ug/L	9.4	3.8		
WW-4-589	14-Dec-15	1512141341B	8270D	8270	106-46-7	1,4-Dichlorobenzene	ND	ug/L	9.4	1.0		
WW-4-589	14-Dec-15	1512141341B	8270D	8270	015176-21-3	1,4-Dioxane, 2,5-dimethyl-	13	ug/L	NA	NA		TIC
WW-4-589	14-Dec-15	1512141341B	8270D	8270	130-15-4	1,4-Naphthoquinone	ND	ug/L	47	2.9		
WW-4-589	14-Dec-15	1512141341B	8270D	8270	106-50-3	1,4-Phenylenediamine	ND	ug/L	47	NA		*
WW-4-589	14-Dec-15	1512141341B	8270D	8270	90-12-0	1-Methylnaphthalene	ND	ug/L	9.4	1.4		
WW-4-589	14-Dec-15	1512141341B	8270D	8270	134-32-7	1-Naphthylamine	ND	ug/L	47	9.2		
WW-4-589	14-Dec-15	1512141341B	8270D	8270	58-90-2	2,3,4,6-Tetrachlorophenol	ND	ug/L	9.4	2.0		
WW-4-589	14-Dec-15	1512141341B	8270D	8270	95-95-4	2,4,5-Trichlorophenol	ND	ug/L	9.4	1.8		
WW-4-589	14-Dec-15	1512141341B	8270D	8270	88-06-2	2,4,6-Trichlorophenol	ND	ug/L	9.4	1.4		
WW-4-589	14-Dec-15	1512141341B	8270D	8270	120-83-2	2,4-Dichlorophenol	ND	ug/L	9.4	1.3		
WW-4-589	14-Dec-15	1512141341B	8270D	8270	105-67-9	2,4-Dimethylphenol	ND	ug/L	9.4	1.5		

wellname	event_date	sample_number	spec_method	analysis	casno	analyte	result	units	PQL	MDL	extract effiency	qa_flag
WW-4-589	14-Dec-15	1512141341B	8270D	8270	51-28-5	2,4-Dinitrophenol	ND	ug/L	47	20		
WW-4-589	14-Dec-15	1512141341B	8270D	8270	121-14-2	2,4-Dinitrotoluene	ND	ug/L	9.4	1.6		
WW-4-589	14-Dec-15	1512141341B	8270D	8270	87-65-0	2,6-Dichlorophenol	ND	ug/L	9.4	1.0		
WW-4-589	14-Dec-15	1512141341B	8270D	8270	606-20-2	2,6-Dinitrotoluene	ND	ug/L	9.4	1.8		
WW-4-589	14-Dec-15	1512141341B	8270D	8270	53-96-3	2-Acetylaminofluorene	ND	ug/L	9.4	1.0		
WW-4-589	14-Dec-15	1512141341B	8270D	8270	91-58-7	2-Chloronaphthalene	ND	ug/L	9.4	1.0		
WW-4-589	14-Dec-15	1512141341B	8270D	8270	95-57-8	2-Chlorophenol	ND	ug/L	9.4	1.0		
WW-4-589	14-Dec-15	1512141341B	8270D	8270	022073-04-7	2-Furancarboxylic acid, tetrahydro-3-methyl-5-oxo-	40	ug/L	NA	NA		TIC
WW-4-589	14-Dec-15	1512141341B	8270D	8270	99-55-8	2-Methyl-5-nitroaniline (5-Nitro-o-toluidine)	ND	ug/L	9.4	1.8		
WW-4-589	14-Dec-15	1512141341B	8270D	8270	91-57-6	2-Methylnaphthalene	ND	ug/L	9.4	1.0		
WW-4-589	14-Dec-15	1512141341B	8270D	8270	95-48-7	2-Methylphenol	ND	ug/L	9.4	1.0		
WW-4-589	14-Dec-15	1512141341B	8270D	8270	91-59-8	2-Naphthylamine	ND	ug/L	47	5.1		
WW-4-589	14-Dec-15	1512141341B	8270D	8270	88-74-4	2-Nitroaniline	ND	ug/L	47	9.1		
WW-4-589	14-Dec-15	1512141341B	8270D	8270	88-75-5	2-Nitrophenol	ND	ug/L	9.4	1.4		
WW-4-589	14-Dec-15	1512141341B	8270D	8270	000123-42-2	2-Pentanone, 4-hydroxy-4-methyl-	6.7	ug/L	NA	NA		TIC
WW-4-589	14-Dec-15	1512141341B	8270D	8270	109-06-8	2-Picoline	ND	ug/L	9.4	1.8		
WW-4-589	14-Dec-15	1512141341B	8270D	8270	15831-10-4	3- and 4-Methylphenol Coelution	ND	ug/L	9.4	2.0		
WW-4-589	14-Dec-15	1512141341B	8270D	8270	91-94-1	3,3'-Dichlorobenzidine	ND	ug/L	9.4	4.5		
WW-4-589	14-Dec-15	1512141341B	8270D	8270	119-93-7	3,3'-Dimethylbenzidine	ND	ug/L	47	19		
WW-4-589	14-Dec-15	1512141341B	8270D	8270	56-49-5	3-Methylcholanthrene	ND	ug/L	9.4	1.0		
WW-4-589	14-Dec-15	1512141341B	8270D	8270	99-09-2	3-Nitroaniline	ND	ug/L	47	7.7		
WW-4-589	14-Dec-15	1512141341B	8270D	8270	534-52-1	4,6-Dinitro-2-methylphenol	ND	ug/L	47	11		
WW-4-589	14-Dec-15	1512141341B	8270D	8270	92-67-1	4-Aminobiphenyl	ND	ug/L	47	6.9		
WW-4-589	14-Dec-15	1512141341B	8270D	8270	101-55-3	4-Bromophenyl Phenyl Ether	ND	ug/L	9.4	2.2		
WW-4-589	14-Dec-15	1512141341B	8270D	8270	59-50-7	4-Chloro-3-methylphenol	ND	ug/L	9.4	1.2		
WW-4-589	14-Dec-15	1512141341B	8270D	8270	7005-72-3	4-Chlorophenyl Phenyl Ether	ND	ug/L	9.4	1.2		
WW-4-589	14-Dec-15	1512141341B	8270D	8270	100-01-6	4-Nitroaniline	ND	ug/L	47	7.8		
WW-4-589	14-Dec-15	1512141341B	8270D	8270	100-02-7	4-Nitrophenol	ND	ug/L	47	5.9		
WW-4-589	14-Dec-15	1512141341B	8270D	8270	56-57-5	4-Nitroquinoline N-Oxide	ND	ug/L	47	11		
WW-4-589	14-Dec-15	1512141341B	8270D	8270	57-97-6	7,12-Dimethylbenz(a)anthracene	ND	ug/L	9.4	1.0		
WW-4-589	14-Dec-15	1512141341B	8270D	8270	122-09-8	a,a-Dimethylphenethylamine	ND	ug/L	47	4.3		
WW-4-589	14-Dec-15	1512141341B	8270D	8270	83-32-9	Acenaphthene	ND	ug/L	9.4	1.0		

wellname	event_date	sample_number	spec_method	analysis	casno	analyte	result	units	PQL	MDL	extract effiency	qa_flag
WW-4-589	14-Dec-15	1512141341B	8270D	8270	208-96-8	Acenaphthylene	ND	ug/L	9.4	1.0		
WW-4-589	14-Dec-15	1512141341B	8270D	8270	208-96-8	Acenaphthylene	ND	ug/L	0.19	0.050		
WW-4-589	14-Dec-15	1512141341B	8270D	8270	98-86-2	Acetophenone	ND	ug/L	9.4	1.6		
WW-4-589	14-Dec-15	1512141341B	8270D	8270	62-53-3	Aniline	ND	ug/L	9.4	2.0		
WW-4-589	14-Dec-15	1512141341B	8270D	8270	120-12-7	Anthracene	ND	ug/L	9.4	1.0		
WW-4-589	14-Dec-15	1512141341B	8270D	8270	140-57-8	Aramite, Total	ND	ug/L	47	9.5		
WW-4-589	14-Dec-15	1512141341B	8270D	8270	56-55-3	Benz(a)anthracene	ND	ug/L	0.19	0.050		
WW-4-589	14-Dec-15	1512141341B	8270D	8270	003622-84-2	Benzenesulfonamide, N-butyl-	5.5	ug/L	NA	NA		TIC
WW-4-589	14-Dec-15	1512141341B	8270D	8270	92-87-5	Benzidine	ND	ug/L	94	90		
WW-4-589	14-Dec-15	1512141341B	8270D	8270	50-32-8	Benzo(a)pyrene	ND	ug/L	0.19	0.050		
WW-4-589	14-Dec-15	1512141341B	8270D	8270	205-99-2	Benzo(b)fluoranthene	ND	ug/L	0.19	0.050		
WW-4-589	14-Dec-15	1512141341B	8270D	8270	191-24-2	Benzo(g,h,i)perylene	ND	ug/L	9.4	1.0		
WW-4-589	14-Dec-15	1512141341B	8270D	8270	207-08-9	Benzo(k)fluoranthene	ND	ug/L	0.19	0.050		
WW-4-589	14-Dec-15	1512141341B	8270D	8270	100-51-6	Benzyl Alcohol	ND	ug/L	9.4	1.3		
WW-4-589	14-Dec-15	1512141341B	8270D	8270	108-60-1	Bis(1-chloroisopropyl) Ether	ND	ug/L	9.4	1.0		
WW-4-589	14-Dec-15	1512141341B	8270D	8270	111-91-1	Bis(2-chloroethoxy)methane	ND	ug/L	9.4	2.2		
WW-4-589	14-Dec-15	1512141341B	8270D	8270	111-44-4	Bis(2-chloroethyl) Ether	ND	ug/L	9.4	1.3		
WW-4-589	14-Dec-15	1512141341B	8270D	8270	117-81-7	Bis(2-ethylhexyl) Phthalate	ND	ug/L	4.7	0.57		
WW-4-589	14-Dec-15	1512141341B	8270D	8270	85-68-7	Butyl Benzyl Phthalate	ND	ug/L	9.4	2.4		
WW-4-589	14-Dec-15	1512141341B	8270D	8270	510-15-6	Chlorobenzilate	ND	ug/L	9.4	1.0		
WW-4-589	14-Dec-15	1512141341B	8270D	8270	218-01-9	Chrysene	ND	ug/L	0.19	0.050		
WW-4-589	14-Dec-15	1512141341B	8270D	8270	2303-16-4	Diallate	ND	ug/L	9.4	1.3		
WW-4-589	14-Dec-15	1512141341B	8270D	8270	53-70-3	Dibenz(a,h)anthracene	ND	ug/L	0.19	0.050		
WW-4-589	14-Dec-15	1512141341B	8270D	8270	132-64-9	Dibenzofuran	ND	ug/L	9.4	1.0		
WW-4-589	14-Dec-15	1512141341B	8270D	8270	84-66-2	Diethyl Phthalate	ND	ug/L	9.4	1.0		
WW-4-589	14-Dec-15	1512141341B	8270D	8270	60-51-5	Dimethoate	ND	ug/L	47	8.7		
WW-4-589	14-Dec-15	1512141341B	8270D	8270	131-11-3	Dimethyl Phthalate	ND	ug/L	9.4	1.0		
WW-4-589	14-Dec-15	1512141341B	8270D	8270	84-74-2	Di-n-butyl Phthalate	ND	ug/L	9.4	1.0		
WW-4-589	14-Dec-15	1512141341B	8270D	8270	117-84-0	Di-n-octyl Phthalate	ND	ug/L	9.4	1.2		
WW-4-589	14-Dec-15	1512141341B	8270D	8270	122-39-4	Diphenylamine	ND	ug/L	9.4	NA		*
WW-4-589	14-Dec-15	1512141341B	8270D	8270	298-04-4	Disulfoton	ND	ug/L	9.4	1.2		
WW-4-589	14-Dec-15	1512141341B	8270D	8270	62-50-0	Ethyl Methanesulfonate	ND	ug/L	9.4	1.0		
WW-4-589	14-Dec-15	1512141341B	8270D	8270	206-44-0	Fluoranthene	ND	ug/L	9.4	1.0		
WW-4-589	14-Dec-15	1512141341B	8270D	8270	86-73-7	Fluorene	ND	ug/L	9.4	1.0		
WW-4-589	14-Dec-15	1512141341B	8270D	8270	000068-12-2	Formamide, N,N-dimethyl-	41	ug/L	NA	NA		TIC RB
WW-4-589	14-Dec-15	1512141341B	8270D	8270	118-74-1	Hexachlorobenzene	ND	ug/L	0.19	0.050		

wellname	event_date	sample_number	spec_method	analysis	casno	analyte	result	units	PQL	MDL	extract effiency	qa_flag
WW-4-589	14-Dec-15	1512141341B	8270D	8270	87-68-3	Hexachlorobutadiene	ND	ug/L	9.4	1.3		
WW-4-589	14-Dec-15	1512141341B	8270D	8270	77-47-4	Hexachlorocyclopentadiene	ND	ug/L	9.4	1.0		
WW-4-589	14-Dec-15	1512141341B	8270D	8270	67-72-1	Hexachloroethane	ND	ug/L	9.4	1.2		
WW-4-589	14-Dec-15	1512141341B	8270D	8270	70-30-4	Hexachlorophene	ND	ug/L	470	55		
WW-4-589	14-Dec-15	1512141341B	8270D	8270	1888-71-7	Hexachloropropene	ND	ug/L	9.4	1.0		
WW-4-589	14-Dec-15	1512141341B	8270D	8270	193-39-5	Indeno(1,2,3-cd)pyrene	ND	ug/L	0.19	0.050		
WW-4-589	14-Dec-15	1512141341B	8270D	8270	465-73-6	Isodrin	ND	ug/L	9.4	1.8		
WW-4-589	14-Dec-15	1512141341B	8270D	8270	78-59-1	Isophorone	ND	ug/L	9.4	1.0		
WW-4-589	14-Dec-15	1512141341B	8270D	8270	120-58-1	Isosafrole	ND	ug/L	9.4	3.8		
WW-4-589	14-Dec-15	1512141341B	8270D	8270	91-80-5	Methapyrilene	ND	ug/L	47	26		
WW-4-589	14-Dec-15	1512141341B	8270D	8270	66-27-3	Methyl Methanesulfonate	ND	ug/L	9.4	1.0		
WW-4-589	14-Dec-15	1512141341B	8270D	8270	298-00-0	Methyl Parathion	ND	ug/L	9.4	1.3		
WW-4-589	14-Dec-15	1512141341B	8270D	8270	91-20-3	Naphthalene	ND	ug/L	9.4	1.0		
WW-4-589	14-Dec-15	1512141341B	8270D	8270	98-95-3	Nitrobenzene	ND	ug/L	9.4	1.6		
WW-4-589	14-Dec-15	1512141341B	8270D	8270	55-18-5	N-Nitrosodiethylamine	ND	ug/L	9.4	1.0		
WW-4-589	14-Dec-15	1512141341B	8270D	8270	62-75-9	N-Nitrosodimethylamine	ND	ug/L	9.4	1.0		
WW-4-589	14-Dec-15	1512141341B	8270D	8270	86-30-6	N-Nitrosodiphenylamine	ND	ug/L	9.4	1.0		
WW-4-589	14-Dec-15	1512141341B	8270D	8270	10595-95-6	N-Nitrosomethylethylamine	ND	ug/L	9.4	1.8		
WW-4-589	14-Dec-15	1512141341B	8270D	8270	59-89-2	N-Nitrosomorpholine	ND	ug/L	9.4	1.2		
WW-4-589	14-Dec-15	1512141341B	8270D	8270	621-64-7	N-Nitroso-N-Dipropylamine	ND	ug/L	9.4	1.3		
WW-4-589	14-Dec-15	1512141341B	8270D	8270	100-75-4	N-Nitrosopiperidine	ND	ug/L	9.4	1.1		
WW-4-589	14-Dec-15	1512141341B	8270D	8270	930-55-2	N-Nitrosopyrrolidine	ND	ug/L	9.4	1.0		
WW-4-589	14-Dec-15	1512141341B	8270D	8270	126-68-1	O,O,O-Triethyl Phosphorothioate	ND	ug/L	9.4	2.0		
WW-4-589	14-Dec-15	1512141341B	8270D	8270	95-53-4	o-Toluidine	ND	ug/L	9.4	2.1		
WW-4-589	14-Dec-15	1512141341B	8270D	8270	56-38-2	Parathion	ND	ug/L	9.4	1.7		
WW-4-589	14-Dec-15	1512141341B	8270D	8270	106-47-8	p-Chloroaniline	ND	ug/L	9.4	1.5		
WW-4-589	14-Dec-15	1512141341B	8270D	8270	60-11-7	p-Dimethylaminoazobenzene	ND	ug/L	9.4	1.0		
WW-4-589	14-Dec-15	1512141341B	8270D	8270	608-93-5	Pentachlorobenzene	ND	ug/L	9.4	1.0		
WW-4-589	14-Dec-15	1512141341B	8270D	8270	76-01-7	Pentachloroethane	ND	ug/L	9.4	1.7		
WW-4-589	14-Dec-15	1512141341B	8270D	8270	82-68-8	Pentachloronitrobenzene (PCNB)	ND	ug/L	9.4	1.5		
WW-4-589	14-Dec-15	1512141341B	8270D	8270	62-44-2	Phenacetin	ND	ug/L	9.4	1.8		
WW-4-589	14-Dec-15	1512141341B	8270D	8270	85-01-8	Phenanthrene	ND	ug/L	9.4	1.0		
WW-4-589	14-Dec-15	1512141341B	8270D	8270	108-95-2	Phenol	ND	ug/L	9.4	1.0		
WW-4-589	14-Dec-15	1512141341B	8270D	8270	298-02-2	Phorate	ND	ug/L	9.4	1.0		

wellname	event_date	sample_number	spec_method	analysis	casno	analyte	result	units	PQL	MDL	extract effiency	qa_flag
WW-4-589	14-Dec-15	1512141341B	8270D	8270	23950-58-5	Pronamide	ND	ug/L	9.4	1.3		
WW-4-589	14-Dec-15	1512141341B	8270D	8270	129-00-0	Pyrene	ND	ug/L	9.4	1.0		
WW-4-589	14-Dec-15	1512141341B	8270D	8270	110-86-1	Pyridine	ND	ug/L	47	16		
WW-4-589	14-Dec-15	1512141341B	8270D	8270	94-59-7	Safrole	ND	ug/L	9.4	1.1		
WW-4-589	14-Dec-15	1512141341B	8270D	8270	3689-24-5	Sulfotep	ND	ug/L	9.4	2.0		
WW-4-589	14-Dec-15	1512141341B	8270D	8270	297-97-2	Thionazin	ND	ug/L	9.4	1.8		
WW-4-589	14-Dec-15	1512151023B	SM 2540 C-1997(20	SM2540C	NA	Total Dissolved Solids (TDS)	725	mg/L	10	4		
WW-4-589	14-Dec-15	1512141335B	8260C	8260_LL	630-20-6	1,1,1,2-Tetrachloroethane	ND	ug/L	0.50	0.20		
WW-4-589	14-Dec-15	1512141335B	8260C	8260_LL	71-55-6	1,1,1-Trichloroethane (TCA)	ND	ug/L	0.50	0.36		
WW-4-589	14-Dec-15	1512141335B	8260C	8260_LL	79-34-5	1,1,2,2-Tetrachloroethane	ND	ug/L	0.50	0.20		
WW-4-589	14-Dec-15	1512141335B	8260C	8260_LL	76-13-1	1,1,2-Trichloro-1,2,2-Trifluoroethane	ND	ug/L	0.50	0.31		
WW-4-589	14-Dec-15	1512141335B	8260C	8260_LL	79-00-5	1,1,2-Trichloroethane	ND	ug/L	0.50	0.23		
WW-4-589	14-Dec-15	1512141335B	8260C	8260_LL	75-34-3	1,1-Dichloroethane (1,1-DCA)	ND	ug/L	0.50	0.20		
WW-4-589	14-Dec-15	1512141335B	8260C	8260_LL	75-35-4	1,1-Dichloroethene	ND	ug/L	0.50	0.28		
WW-4-589	14-Dec-15	1512141335B	8260C	8260_LL	96-18-4	1,2,3-Trichloropropane	ND	ug/L	0.50	0.32		
WW-4-589	14-Dec-15	1512141335B	8260C	8260_LL	96-12-8	1,2-Dibromo-3-chloropropane (DBCP)	ND	ug/L	1.0	0.74		
WW-4-589	14-Dec-15	1512141335B	8260C	8260_LL	106-93-4	1,2-Dibromoethane	ND	ug/L	0.50	0.24		
WW-4-589	14-Dec-15	1512141335B	8260C	8260_LL	354-23-4	1,2-Dichloro-1,1,2-trifluoroethane (CFC 123a)	ND	ug/L	0.50	0.20		
WW-4-589	14-Dec-15	1512141335B	8260C	8260_LL	107-06-2	1,2-Dichloroethane	ND	ug/L	0.50	0.20		
WW-4-589	14-Dec-15	1512141335B	8260C	8260_LL	78-87-5	1,2-Dichloropropane	ND	ug/L	0.50	0.20		
WW-4-589	14-Dec-15	1512141335B	8260C	8260_LL	123-91-1	1,4-Dioxane	ND	ug/L	40	18		
WW-4-589	14-Dec-15	1512141335B	8260C	8260_LL	306-83-2	2,2-Dichloro-1,1,1-trifluoroethane (CFC 123)	ND	ug/L	0.50	0.32		
WW-4-589	14-Dec-15	1512141335B	8260C	8260_LL	78-93-3	2-Butanone (MEK)	ND	ug/L	5.0	0.81		
WW-4-589	14-Dec-15	1512141335B	8260C	8260_LL	126-99-8	2-Chloro-1,3-butadiene	ND	ug/L	0.50	0.22		
WW-4-589	14-Dec-15	1512141335B	8260C	8260_LL	591-78-6	2-Hexanone	ND	ug/L	5.0	0.73		
WW-4-589	14-Dec-15	1512141335B	8260C	8260_LL	78-83-1	2-Methyl-1-propanol (Isobutyl Alcohol)	ND	ug/L	100	8.1		
WW-4-589	14-Dec-15	1512141335B	8260C	8260_LL	67-63-0	2-Propanol	ND	ug/L	40	8.6		
WW-4-589	14-Dec-15	1512141335B	8260C	8260_LL	107-05-1	3-Chloro-1-propene (Allyl Chloride)	ND	ug/L	0.50	0.25		
WW-4-589	14-Dec-15	1512141335B	8260C	8260_LL	108-10-1	4-Methyl-2-pentanone	ND	ug/L	2.0	0.20		
WW-4-589	14-Dec-15	1512141335B	8260C	8260_LL	67-64-1	Acetone	15	ug/L	5.0	1.3		
WW-4-589	14-Dec-15	1512141335B	8260C	8260_LL	75-05-8	Acetonitrile	ND	ug/L	25	3.7		

wellname	event_date	sample_number	spec_method	analysis	casno	analyte	result	units	PQL	MDL	extract effiency	qa_flag
WW-4-589	14-Dec-15	1512141335B	8260C	8260_LL	107-02-8	Acrolein	ND	ug/L	5.0	3.0		
WW-4-589	14-Dec-15	1512141335B	8260C	8260_LL	107-13-1	Acrylonitrile	ND	ug/L	2.5	0.78		
WW-4-589	14-Dec-15	1512141335B	8260C	8260_LL	71-43-2	Benzene	ND	ug/L	0.50	0.20		
WW-4-589	14-Dec-15	1512141335B	8260C	8260_LL	75-27-4	Bromodichloromethane	ND	ug/L	0.50	0.32		
WW-4-589	14-Dec-15	1512141335B	8260C	8260_LL	75-25-2	Bromoform	ND	ug/L	1.0	0.21		
WW-4-589	14-Dec-15	1512141335B	8260C	8260_LL	74-83-9	Bromomethane	ND	ug/L	0.50	0.24		
WW-4-589	14-Dec-15	1512141335B	8260C	8260_LL	75-15-0	Carbon Disulfide	ND	ug/L	0.50	0.20		
WW-4-589	14-Dec-15	1512141335B	8260C	8260_LL	56-23-5	Carbon Tetrachloride	ND	ug/L	0.50	0.45		
WW-4-589	14-Dec-15	1512141335B	8260C	8260_LL	108-90-7	Chlorobenzene	ND	ug/L	0.50	0.20		
WW-4-589	14-Dec-15	1512141335B	8260C	8260_LL	75-00-3	Chloroethane	ND	ug/L	0.50	0.22		
WW-4-589	14-Dec-15	1512141335B	8260C	8260_LL	67-66-3	Chloroform	ND	ug/L	0.50	0.20		
WW-4-589	14-Dec-15	1512141335B	8260C	8260_LL	74-87-3	Chloromethane	ND	ug/L	0.50	0.20		
WW-4-589	14-Dec-15	1512141335B	8260C	8260_LL	156-59-2	cis-1,2-Dichloroethene	ND	ug/L	0.50	0.20		
WW-4-589	14-Dec-15	1512141335B	8260C	8260_LL	10061-01-5	cis-1,3-Dichloropropene	ND	ug/L	0.50	0.20		
WW-4-589	14-Dec-15	1512141335B	8260C	8260_LL	110-82-7	Cyclohexane	ND	ug/L	1.0	0.25		
WW-4-589	14-Dec-15	1512141335B	8260C	8260_LL	124-48-1	Dibromochloromethane	ND	ug/L	0.50	0.20		
WW-4-589	14-Dec-15	1512141335B	8260C	8260_LL	74-95-3	Dibromomethane	ND	ug/L	0.50	0.22		
WW-4-589	14-Dec-15	1512141335B	8260C	8260_LL	75-71-8	Dichlorodifluoromethane (CFC 12)	ND	ug/L	0.50	0.21		
WW-4-589	14-Dec-15	1512141335B	8260C	8260_LL	75-43-4	Dichlorofluoromethane (CFC 21)	ND	ug/L	0.50	0.20		
WW-4-589	14-Dec-15	1512141335B	8260C	8260_LL	75-09-2	Dichloromethane	ND	ug/L	0.50	0.20		
WW-4-589	14-Dec-15	1512141335B	8260C	8260_LL	97-63-2	Ethyl Methacrylate	ND	ug/L	0.50	0.20		
WW-4-589	14-Dec-15	1512141335B	8260C	8260_LL	100-41-4	Ethylbenzene	ND	ug/L	0.50	0.20		
WW-4-589	14-Dec-15	1512141335B	8260C	8260_LL	74-88-4	Iodomethane	ND	ug/L	5.0	0.27		
WW-4-589	14-Dec-15	1512141335B	8260C	8260_LL	179601-23-1	m,p-Xylenes	ND	ug/L	1.0	0.26		
WW-4-589	14-Dec-15	1512141335B	8260C	8260_LL	126-98-7	Methacrylonitrile	ND	ug/L	1.0	0.50		
WW-4-589	14-Dec-15	1512141335B	8260C	8260_LL	80-62-6	Methyl Methacrylate	ND	ug/L	0.50	0.39		
WW-4-589	14-Dec-15	1512141335B	8260C	8260_LL	1634-04-4	Methyl tert-Butyl Ether	ND	ug/L	0.50	0.20		
WW-4-589	14-Dec-15	1512141335B	8260C	8260_LL	108-87-2	Methylcyclohexane	ND	ug/L	1.0	0.27		
WW-4-589	14-Dec-15	1512141335B	8260C	8260_LL	95-47-6	o-Xylene	ND	ug/L	0.50	0.20		
WW-4-589	14-Dec-15	1512141335B	8260C	8260_LL	107-12-0	Propionitrile	ND	ug/L	2.5	1.7		
WW-4-589	14-Dec-15	1512141335B	8260C	8260_LL	100-42-5	Styrene	ND	ug/L	0.50	0.20		
WW-4-589	14-Dec-15	1512141335B	8260C	8260_LL	127-18-4	Tetrachloroethene (PCE)	ND	ug/L	0.50	0.20		
WW-4-589	14-Dec-15	1512141335B	8260C	8260_LL	109-99-9	Tetrahydrofuran (THF)	ND	ug/L	5.0	0.66		
WW-4-589	14-Dec-15	1512141335B	8260C	8260_LL	108-88-3	Toluene	0.72	ug/L	0.50	0.20		
WW-4-589	14-Dec-15	1512141335B	8260C	8260_LL	156-60-5	trans-1,2-Dichloroethene	ND	ug/L	0.50	0.20		

wellname	event_date	sample_number	spec_method	analysis	casno	analyte	result	units	PQL	MDL	extract effiency	qa_flag
WW-4-589	14-Dec-15	1512141335B	8260C	8260_LL	10061-02-6	trans-1,3-Dichloropropene	ND	ug/L	0.50	0.20		
WW-4-589	14-Dec-15	1512141335B	8260C	8260_LL	110-57-6	trans-1,4-Dichloro-2-butene	ND	ug/L	0.52	0.52		
WW-4-589	14-Dec-15	1512141335B	8260C	8260_LL	79-01-6	Trichloroethene (TCE)	ND	ug/L	0.50	0.20		
WW-4-589	14-Dec-15	1512141335B	8260C	8260_LL	75-69-4	Trichlorofluoromethane (CFC 11)	ND	ug/L	0.50	0.20		
WW-4-589	14-Dec-15	1512141335B	8260C	8260_LL	TIC	unknown	9.3	ug/L	NA	NA		J TIC
WW-4-589	14-Dec-15	1512141335B	8260C	8260_LL	108-05-4	Vinyl Acetate	ND	ug/L	1.0	0.78		
WW-4-589	14-Dec-15	1512141335B	8260C	8260_LL	75-01-4	Vinyl Chloride	ND	ug/L	0.50	0.22		
WW-4-848	14-Dec-15	1512151042B	SM 2320 B-1997(20	ANIONS	NA	Alkalinity, Total as CaCO3	170	mg/L	2.0	0.3		
WW-4-848	14-Dec-15	1512151042B	300.0	ANIONS	16887-00-6	Chloride	35.3	mg/L	2.0	1.0		
WW-4-848	14-Dec-15	1512151042B	300.0	ANIONS	16984-48-8	Fluoride, undistilled	0.72	mg/L	0.10	0.008		
WW-4-848	14-Dec-15	1512151042B	300.0	ANIONS	14808-79-8	Sulfate	266	mg/L	8.0	0.8		
WW-4-848	14-Dec-15	1512151058B	PARAMS	PARAMS	NA	Conductivity	912	µS/cm	NA	NA		
WW-4-848	14-Dec-15	1512151058B	PARAMS	PARAMS	NA	pH	8.46	NA	NA	NA		
WW-4-848	14-Dec-15	1512151058B	PARAMS	PARAMS	NA	Temperature	18.4	ºC	NA	NA		
WW-4-848	14-Dec-15	1512151058B	PARAMS	PARAMS	NA	Transducer	NA	ft	NA	NA		
WW-4-848	14-Dec-15	1512151058B	PARAMS	PARAMS	NA	Turbidity	0.98	NTU	NA	NA		
WW-4-848	14-Dec-15	1512141300B	PARAMS	PARAMS	NA	Conductivity	920	µS/cm	NA	NA		
WW-4-848	14-Dec-15	1512141300B	PARAMS	PARAMS	NA	pH	8.60	NA	NA	NA		
WW-4-848	14-Dec-15	1512141300B	PARAMS	PARAMS	NA	Temperature	18.0	ºC	NA	NA		
WW-4-848	14-Dec-15	1512141300B	PARAMS	PARAMS	NA	Transducer	88.2	ft	NA	NA		
WW-4-848	14-Dec-15	1512141300B	PARAMS	PARAMS	NA	Turbidity	1.34	NTU	NA	NA		
WW-4-848	14-Dec-15	1512151040B	6010C	METALS	7429-90-5	Aluminum, Total	ND	mg/L	0.10	0.010		
WW-4-848	14-Dec-15	1512151040B	6020A	METALS	7440-36-0	Antimony, Total	ND	mg/L	0.0010	0.0004		
WW-4-848	14-Dec-15	1512151040B	6020A	METALS	7440-38-2	Arsenic, Total	0.0017	mg/L	0.0010	0.0004		
WW-4-848	14-Dec-15	1512151040B	6010C	METALS	7440-39-3	Barium, Total	0.013	mg/L	0.020	0.002		J
WW-4-848	14-Dec-15	1512151040B	6010C	METALS	7440-41-7	Beryllium, Total	ND	mg/L	0.0030	0.0002		
WW-4-848	14-Dec-15	1512151040B	6010C	METALS	7440-42-8	Boron, Total	0.18	mg/L	0.20	0.02		J
WW-4-848	14-Dec-15	1512151040B	6010C	METALS	7440-43-9	Cadmium, Total	0.0003	mg/L	0.0050	0.0002		J RB
WW-4-848	14-Dec-15	1512151040B	6010C	METALS	7440-70-2	Calcium, Total	42.8	mg/L	1.0	0.2		
WW-4-848	14-Dec-15	1512151040B	6010C	METALS	7440-47-3	Chromium, Total	0.003	mg/L	0.010	0.0003		J
WW-4-848	14-Dec-15	1512151040B	6010C	METALS	7440-48-4	Cobalt, Total	ND	mg/L	0.050	0.002		
WW-4-848	14-Dec-15	1512151040B	6010C	METALS	7440-50-8	Copper, Total	ND	mg/L	0.020	0.003		
WW-4-848	14-Dec-15	1512151040B	6010C	METALS	7439-89-6	Iron, Total	ND	mg/L	0.10	0.009		
WW-4-848	14-Dec-15	1512151040B	6010C	METALS	7439-92-1	Lead, Total	ND	mg/L	0.050	0.005		
WW-4-848	14-Dec-15	1512151040B	6010C	METALS	7439-95-4	Magnesium, Total	23.3	mg/L	1.0	0.010		

wellname	event_date	sample_number	spec_method	analysis	casno	analyte	result	units	PQL	MDL	extract effiency	qa_flag
WW-4-848	14-Dec-15	1512151040B	6010C	METALS	7439-96-5	Manganese, Total	0.003	mg/L	0.010	0.0010		J
WW-4-848	14-Dec-15	1512151040B	7470A	METALS	7439-97-6	Mercury, Total	ND	mg/L	0.00020	0.00004		
WW-4-848	14-Dec-15	1512151040B	6010C	METALS	7439-98-7	Molybdenum, Total	0.013	mg/L	0.025	0.002		J
WW-4-848	14-Dec-15	1512151040B	6010C	METALS	7440-02-0	Nickel, Total	0.013	mg/L	0.040	0.002		J
WW-4-848	14-Dec-15	1512151040B	6010C	METALS	7440-09-7	Potassium, Total	3.2	mg/L	2.0	0.05		
WW-4-848	14-Dec-15	1512151040B	6010C	METALS	7782-49-2	Selenium, Total	0.005	mg/L	0.010	0.005		J
WW-4-848	14-Dec-15	1512151040B	6010C	METALS	7440-22-4	Silver, Total	ND	mg/L	0.010	0.0006		
WW-4-848	14-Dec-15	1512151040B	6010C	METALS	7440-23-5	Sodium, Total	94.9	mg/L	1.0	0.09		
WW-4-848	14-Dec-15	1512151040B	6010C	METALS	7440-24-6	Strontium, Total	1.47	mg/L	0.10	0.002		
WW-4-848	14-Dec-15	1512151040B	6020A	METALS	7440-28-0	Thallium, Total	ND	mg/L	0.0010	0.00003		
WW-4-848	14-Dec-15	1512151040B	6010C	METALS	7440-31-5	Tin, Total	ND	mg/L	0.50	0.02		
WW-4-848	14-Dec-15	1512151040B	6010C	METALS	7440-62-2	Vanadium, Total	0.019	mg/L	0.050	0.0010		J
WW-4-848	14-Dec-15	1512151040B	6010C	METALS	7440-66-6	Zinc, Total	0.008	mg/L	0.020	0.007		J
WW-4-848	14-Dec-15	1512141301B	TAP 01-0408-031	607	314-40-9	Bromacil	ND	ug/L	0.0094	0.0047	96	
WW-4-848	14-Dec-15	1512141301B	TAP 01-0408-031	607	4164-28-7	N-Nitrodimethylamine	ND	ug/L	0.0094	0.0047	92	
WW-4-848	14-Dec-15	1512141301B	TAP 01-0408-031	607	62-75-9	N-Nitrosodimethylamine	ND	ug/L	0.0094	0.0047	75	
WW-4-848	14-Dec-15	1512141355B	TAP 01-0403-015	NDMA_LL	4164-28-7	N-Nitrodimethylamine	ND	ng/L	0.5	0.17		
WW-4-848	14-Dec-15	1512141355B	TAP 01-0403-015	NDMA_LL	62-75-9	N-Nitrosodimethylamine	2.2	ng/L	0.5	0.37		FB
WW-4-848	14-Dec-15	1512151048B	353.2	353.2	NA	Nitrate+Nitrite as Nitrogen	0.709	mg/L	0.050	0.003		
WW-4-848	14-Dec-15	1512151046B	6850	6850	14797-73-0	Perchlorate	0.2	ug/L	0.20	0.026		
WW-4-848	14-Dec-15	1512141400B	8270D	8270	95-94-3	1,2,4,5-Tetrachlorobenzene	ND	ug/L	9.4	1.9		
WW-4-848	14-Dec-15	1512141400B	8270D	8270	120-82-1	1,2,4-Trichlorobenzene	ND	ug/L	9.4	1.0		
WW-4-848	14-Dec-15	1512141400B	8270D	8270	95-50-1	1,2-Dichlorobenzene	ND	ug/L	9.4	1.0		
WW-4-848	14-Dec-15	1512141400B	8270D	8270	122-66-7	1,2-Diphenylhydrazine	ND	ug/L	9.4	1.0		
WW-4-848	14-Dec-15	1512141400B	8270D	8270	99-35-4	1,3,5-Trinitrobenzene	ND	ug/L	9.4	2.5		
WW-4-848	14-Dec-15	1512141400B	8270D	8270	541-73-1	1,3-Dichlorobenzene	ND	ug/L	9.4	1.0		
WW-4-848	14-Dec-15	1512141400B	8270D	8270	99-65-0	1,3-Dinitrobenzene	ND	ug/L	9.4	3.8		
WW-4-848	14-Dec-15	1512141400B	8270D	8270	106-46-7	1,4-Dichlorobenzene	ND	ug/L	9.4	1.0		
WW-4-848	14-Dec-15	1512141400B	8270D	8270	130-15-4	1,4-Naphthoquinone	ND	ug/L	47	2.9		
WW-4-848	14-Dec-15	1512141400B	8270D	8270	106-50-3	1,4-Phenylenediamine	ND	ug/L	47	NA		*
WW-4-848	14-Dec-15	1512141400B	8270D	8270	90-12-0	1-Methylnaphthalene	ND	ug/L	9.4	1.4		
WW-4-848	14-Dec-15	1512141400B	8270D	8270	134-32-7	1-Naphthylamine	ND	ug/L	47	9.2		
WW-4-848	14-Dec-15	1512141400B	8270D	8270	58-90-2	2,3,4,6-Tetrachlorophenol	ND	ug/L	9.4	2.0		

wellname	event_date	sample_number	spec_method	analysis	casno	analyte	result	units	PQL	MDL	extract effiency	qa_flag
WW-4-848	14-Dec-15	1512141400B	8270D	8270	95-95-4	2,4,5-Trichlorophenol	ND	ug/L	9.4	1.8		
WW-4-848	14-Dec-15	1512141400B	8270D	8270	88-06-2	2,4,6-Trichlorophenol	ND	ug/L	9.4	1.4		
WW-4-848	14-Dec-15	1512141400B	8270D	8270	120-83-2	2,4-Dichlorophenol	ND	ug/L	9.4	1.3		
WW-4-848	14-Dec-15	1512141400B	8270D	8270	105-67-9	2,4-Dimethylphenol	ND	ug/L	9.4	1.5		
WW-4-848	14-Dec-15	1512141400B	8270D	8270	51-28-5	2,4-Dinitrophenol	ND	ug/L	47	20		
WW-4-848	14-Dec-15	1512141400B	8270D	8270	121-14-2	2,4-Dinitrotoluene	ND	ug/L	9.4	1.6		
WW-4-848	14-Dec-15	1512141400B	8270D	8270	87-65-0	2,6-Dichlorophenol	ND	ug/L	9.4	1.0		
WW-4-848	14-Dec-15	1512141400B	8270D	8270	606-20-2	2,6-Dinitrotoluene	ND	ug/L	9.4	1.8		
WW-4-848	14-Dec-15	1512141400B	8270D	8270	53-96-3	2-Acetylaminofluorene	ND	ug/L	9.4	1.0		
WW-4-848	14-Dec-15	1512141400B	8270D	8270	91-58-7	2-Chloronaphthalene	ND	ug/L	9.4	1.0		
WW-4-848	14-Dec-15	1512141400B	8270D	8270	95-57-8	2-Chlorophenol	ND	ug/L	9.4	1.0		
WW-4-848	14-Dec-15	1512141400B	8270D	8270	99-55-8	2-Methyl-5-nitroaniline (5-Nitro-o-toluidine)	ND	ug/L	9.4	1.8		
WW-4-848	14-Dec-15	1512141400B	8270D	8270	91-57-6	2-Methylnaphthalene	ND	ug/L	9.4	1.0		
WW-4-848	14-Dec-15	1512141400B	8270D	8270	95-48-7	2-Methylphenol	ND	ug/L	9.4	1.0		
WW-4-848	14-Dec-15	1512141400B	8270D	8270	91-59-8	2-Naphthylamine	ND	ug/L	47	5.1		
WW-4-848	14-Dec-15	1512141400B	8270D	8270	88-74-4	2-Nitroaniline	ND	ug/L	47	9.1		
WW-4-848	14-Dec-15	1512141400B	8270D	8270	88-75-5	2-Nitrophenol	ND	ug/L	9.4	1.4		
WW-4-848	14-Dec-15	1512141400B	8270D	8270	000497-25-6	2-Oxazolidone	4.2	ug/L	NA	NA		TIC
WW-4-848	14-Dec-15	1512141400B	8270D	8270	000123-42-2	2-Pentanone, 4-hydroxy-4-methyl-	13	ug/L	NA	NA		TIC
WW-4-848	14-Dec-15	1512141400B	8270D	8270	109-06-8	2-Picoline	ND	ug/L	9.4	1.8		
WW-4-848	14-Dec-15	1512141400B	8270D	8270	15831-10-4	3- and 4-Methylphenol Coelution	ND	ug/L	9.4	2.0		
WW-4-848	14-Dec-15	1512141400B	8270D	8270	91-94-1	3,3'-Dichlorobenzidine	ND	ug/L	9.4	4.5		
WW-4-848	14-Dec-15	1512141400B	8270D	8270	119-93-7	3,3'-Dimethylbenzidine	ND	ug/L	47	19		
WW-4-848	14-Dec-15	1512141400B	8270D	8270	56-49-5	3-Methylcholanthrene	ND	ug/L	9.4	1.0		
WW-4-848	14-Dec-15	1512141400B	8270D	8270	99-09-2	3-Nitroaniline	ND	ug/L	47	7.7		
WW-4-848	14-Dec-15	1512141400B	8270D	8270	534-52-1	4,6-Dinitro-2-methylphenol	ND	ug/L	47	11		
WW-4-848	14-Dec-15	1512141400B	8270D	8270	92-67-1	4-Aminobiphenyl	ND	ug/L	47	6.9		
WW-4-848	14-Dec-15	1512141400B	8270D	8270	101-55-3	4-Bromophenyl Phenyl Ether	ND	ug/L	9.4	2.2		
WW-4-848	14-Dec-15	1512141400B	8270D	8270	59-50-7	4-Chloro-3-methylphenol	ND	ug/L	9.4	1.2		
WW-4-848	14-Dec-15	1512141400B	8270D	8270	7005-72-3	4-Chlorophenyl Phenyl Ether	ND	ug/L	9.4	1.2		
WW-4-848	14-Dec-15	1512141400B	8270D	8270	000503-86-6	4H-Imidazol-4-one, 2-amino-1,5-dihydro-	50	ug/L	NA	NA		TIC RB
WW-4-848	14-Dec-15	1512141400B	8270D	8270	100-01-6	4-Nitroaniline	ND	ug/L	47	7.8		
WW-4-848	14-Dec-15	1512141400B	8270D	8270	100-02-7	4-Nitrophenol	ND	ug/L	47	5.9		
WW-4-848	14-Dec-15	1512141400B	8270D	8270	56-57-5	4-Nitroquinoline N-Oxide	ND	ug/L	47	11		

wellname	event_date	sample_number	spec_method	analysis	casno	analyte	result	units	PQL	MDL	extract effiency	qa_flag
WW-4-848	14-Dec-15	1512141400B	8270D	8270	57-97-6	7,12-Dimethylbenz(a)anthracene	ND	ug/L	9.4	1.0		
WW-4-848	14-Dec-15	1512141400B	8270D	8270	122-09-8	a,a-Dimethylphenethylamine	ND	ug/L	47	4.3		
WW-4-848	14-Dec-15	1512141400B	8270D	8270	83-32-9	Acenaphthene	ND	ug/L	9.4	1.0		
WW-4-848	14-Dec-15	1512141400B	8270D	8270	208-96-8	Acenaphthylene	ND	ug/L	9.4	1.0		
WW-4-848	14-Dec-15	1512141400B	8270D	8270	208-96-8	Acenaphthylene	ND	ug/L	0.19	0.050		
WW-4-848	14-Dec-15	1512141400B	8270D	8270	98-86-2	Acetophenone	ND	ug/L	9.4	1.6		
WW-4-848	14-Dec-15	1512141400B	8270D	8270	62-53-3	Aniline	ND	ug/L	9.4	2.0		
WW-4-848	14-Dec-15	1512141400B	8270D	8270	120-12-7	Anthracene	ND	ug/L	9.4	1.0		
WW-4-848	14-Dec-15	1512141400B	8270D	8270	140-57-8	Aramite, Total	ND	ug/L	47	9.5		
WW-4-848	14-Dec-15	1512141400B	8270D	8270	56-55-3	Benz(a)anthracene	ND	ug/L	0.19	0.050		
WW-4-848	14-Dec-15	1512141400B	8270D	8270	003622-84-2	Benzenesulfonamide, N-butyl-	16	ug/L	NA	NA		TIC
WW-4-848	14-Dec-15	1512141400B	8270D	8270	92-87-5	Benzidine	ND	ug/L	94	90		
WW-4-848	14-Dec-15	1512141400B	8270D	8270	50-32-8	Benzo(a)pyrene	ND	ug/L	0.19	0.050		
WW-4-848	14-Dec-15	1512141400B	8270D	8270	205-99-2	Benzo(b)fluoranthene	ND	ug/L	0.19	0.050		
WW-4-848	14-Dec-15	1512141400B	8270D	8270	191-24-2	Benzo(g,h,i)perylene	ND	ug/L	9.4	1.0		
WW-4-848	14-Dec-15	1512141400B	8270D	8270	207-08-9	Benzo(k)fluoranthene	ND	ug/L	0.19	0.050		
WW-4-848	14-Dec-15	1512141400B	8270D	8270	100-51-6	Benzyl Alcohol	ND	ug/L	9.4	1.3		
WW-4-848	14-Dec-15	1512141400B	8270D	8270	108-60-1	Bis(1-chloroisopropyl) Ether	ND	ug/L	9.4	1.0		
WW-4-848	14-Dec-15	1512141400B	8270D	8270	111-91-1	Bis(2-chloroethoxy)methane	ND	ug/L	9.4	2.2		
WW-4-848	14-Dec-15	1512141400B	8270D	8270	111-44-4	Bis(2-chloroethyl) Ether	ND	ug/L	9.4	1.3		
WW-4-848	14-Dec-15	1512141400B	8270D	8270	117-81-7	Bis(2-ethylhexyl) Phthalate	ND	ug/L	4.7	0.57		
WW-4-848	14-Dec-15	1512141400B	8270D	8270	85-68-7	Butyl Benzyl Phthalate	ND	ug/L	9.4	2.4		
WW-4-848	14-Dec-15	1512141400B	8270D	8270	510-15-6	Chlorobenzilate	ND	ug/L	9.4	1.0		
WW-4-848	14-Dec-15	1512141400B	8270D	8270	218-01-9	Chrysene	ND	ug/L	0.19	0.050		
WW-4-848	14-Dec-15	1512141400B	8270D	8270	2303-16-4	Diallate	ND	ug/L	9.4	1.3		
WW-4-848	14-Dec-15	1512141400B	8270D	8270	53-70-3	Dibenz(a,h)anthracene	ND	ug/L	0.19	0.050		
WW-4-848	14-Dec-15	1512141400B	8270D	8270	132-64-9	Dibenzofuran	ND	ug/L	9.4	1.0		
WW-4-848	14-Dec-15	1512141400B	8270D	8270	84-66-2	Diethyl Phthalate	ND	ug/L	9.4	1.0		
WW-4-848	14-Dec-15	1512141400B	8270D	8270	60-51-5	Dimethoate	ND	ug/L	47	8.7		
WW-4-848	14-Dec-15	1512141400B	8270D	8270	131-11-3	Dimethyl Phthalate	ND	ug/L	9.4	1.0		
WW-4-848	14-Dec-15	1512141400B	8270D	8270	84-74-2	Di-n-butyl Phthalate	ND	ug/L	9.4	1.0		
WW-4-848	14-Dec-15	1512141400B	8270D	8270	117-84-0	Di-n-octyl Phthalate	ND	ug/L	9.4	1.2		
WW-4-848	14-Dec-15	1512141400B	8270D	8270	122-39-4	Diphenylamine	ND	ug/L	9.4	NA		*
WW-4-848	14-Dec-15	1512141400B	8270D	8270	298-04-4	Disulfoton	ND	ug/L	9.4	1.2		

wellname	event_date	sample_number	spec_method	analysis	casno	analyte	result	units	PQL	MDL	extract effiency	qa_flag
WW-4-848	14-Dec-15	1512141400B	8270D	8270	62-50-0	Ethyl Methanesulfonate	ND	ug/L	9.4	1.0		
WW-4-848	14-Dec-15	1512141400B	8270D	8270	206-44-0	Fluoranthene	ND	ug/L	9.4	1.0		
WW-4-848	14-Dec-15	1512141400B	8270D	8270	86-73-7	Fluorene	ND	ug/L	9.4	1.0		
WW-4-848	14-Dec-15	1512141400B	8270D	8270	118-74-1	Hexachlorobenzene	ND	ug/L	0.19	0.050		
WW-4-848	14-Dec-15	1512141400B	8270D	8270	87-68-3	Hexachlorobutadiene	ND	ug/L	9.4	1.3		
WW-4-848	14-Dec-15	1512141400B	8270D	8270	77-47-4	Hexachlorocyclopentadiene	ND	ug/L	9.4	1.0		
WW-4-848	14-Dec-15	1512141400B	8270D	8270	67-72-1	Hexachloroethane	ND	ug/L	9.4	1.2		
WW-4-848	14-Dec-15	1512141400B	8270D	8270	70-30-4	Hexachlorophene	ND	ug/L	470	55		
WW-4-848	14-Dec-15	1512141400B	8270D	8270	1888-71-7	Hexachloropropene	ND	ug/L	9.4	1.0		
WW-4-848	14-Dec-15	1512141400B	8270D	8270	193-39-5	Indeno(1,2,3-cd)pyrene	ND	ug/L	0.19	0.050		
WW-4-848	14-Dec-15	1512141400B	8270D	8270	465-73-6	Isodrin	ND	ug/L	9.4	1.8		
WW-4-848	14-Dec-15	1512141400B	8270D	8270	78-59-1	Isophorone	ND	ug/L	9.4	1.0		
WW-4-848	14-Dec-15	1512141400B	8270D	8270	120-58-1	Isosafrole	ND	ug/L	9.4	3.8		
WW-4-848	14-Dec-15	1512141400B	8270D	8270	91-80-5	Methapyrilene	ND	ug/L	47	26		
WW-4-848	14-Dec-15	1512141400B	8270D	8270	66-27-3	Methyl Methanesulfonate	ND	ug/L	9.4	1.0		
WW-4-848	14-Dec-15	1512141400B	8270D	8270	298-00-0	Methyl Parathion	ND	ug/L	9.4	1.3		
WW-4-848	14-Dec-15	1512141400B	8270D	8270	91-20-3	Naphthalene	ND	ug/L	9.4	1.0		
WW-4-848	14-Dec-15	1512141400B	8270D	8270	98-95-3	Nitrobenzene	ND	ug/L	9.4	1.6		
WW-4-848	14-Dec-15	1512141400B	8270D	8270	55-18-5	N-Nitrosodiethylamine	ND	ug/L	9.4	1.0		
WW-4-848	14-Dec-15	1512141400B	8270D	8270	62-75-9	N-Nitrosodimethylamine	ND	ug/L	9.4	1.0		
WW-4-848	14-Dec-15	1512141400B	8270D	8270	86-30-6	N-Nitrosodiphenylamine	ND	ug/L	9.4	1.0		
WW-4-848	14-Dec-15	1512141400B	8270D	8270	10595-95-6	N-Nitrosomethylethylamine	ND	ug/L	9.4	1.8		
WW-4-848	14-Dec-15	1512141400B	8270D	8270	59-89-2	N-Nitrosomorpholine	ND	ug/L	9.4	1.2		
WW-4-848	14-Dec-15	1512141400B	8270D	8270	621-64-7	N-Nitroso-N-Dipropylamine	ND	ug/L	9.4	1.3		
WW-4-848	14-Dec-15	1512141400B	8270D	8270	100-75-4	N-Nitrosopiperidine	ND	ug/L	9.4	1.1		
WW-4-848	14-Dec-15	1512141400B	8270D	8270	930-55-2	N-Nitrosopyrrolidine	ND	ug/L	9.4	1.0		
WW-4-848	14-Dec-15	1512141400B	8270D	8270	126-68-1	O,O,O-Triethyl Phosphorothioate	ND	ug/L	9.4	2.0		
WW-4-848	14-Dec-15	1512141400B	8270D	8270	95-53-4	o-Toluidine	ND	ug/L	9.4	2.1		
WW-4-848	14-Dec-15	1512141400B	8270D	8270	56-38-2	Parathion	ND	ug/L	9.4	1.7		
WW-4-848	14-Dec-15	1512141400B	8270D	8270	106-47-8	p-Chloroaniline	ND	ug/L	9.4	1.5		
WW-4-848	14-Dec-15	1512141400B	8270D	8270	60-11-7	p-Dimethylaminoazobenzene	ND	ug/L	9.4	1.0		
WW-4-848	14-Dec-15	1512141400B	8270D	8270	608-93-5	Pentachlorobenzene	ND	ug/L	9.4	1.0		
WW-4-848	14-Dec-15	1512141400B	8270D	8270	76-01-7	Pentachloroethane	ND	ug/L	9.4	1.7		
WW-4-848	14-Dec-15	1512141400B	8270D	8270	82-68-8	Pentachloronitrobenzene (PCNB)	ND	ug/L	9.4	1.5		

wellname	event_date	sample_number	spec_method	analysis	casno	analyte	result	units	PQL	MDL	extract effiency	qa_flag
WW-4-848	14-Dec-15	1512141400B	8270D	8270	62-44-2	Phenacetin	ND	ug/L	9.4	1.8		
WW-4-848	14-Dec-15	1512141400B	8270D	8270	85-01-8	Phenanthrene	ND	ug/L	9.4	1.0		
WW-4-848	14-Dec-15	1512141400B	8270D	8270	108-95-2	Phenol	ND	ug/L	9.4	1.0		
WW-4-848	14-Dec-15	1512141400B	8270D	8270	298-02-2	Phorate	ND	ug/L	9.4	1.0		
WW-4-848	14-Dec-15	1512141400B	8270D	8270	23950-58-5	Pronamide	ND	ug/L	9.4	1.3		
WW-4-848	14-Dec-15	1512141400B	8270D	8270	129-00-0	Pyrene	ND	ug/L	9.4	1.0		
WW-4-848	14-Dec-15	1512141400B	8270D	8270	110-86-1	Pyridine	ND	ug/L	47	16		
WW-4-848	14-Dec-15	1512141400B	8270D	8270	94-59-7	Safrole	ND	ug/L	9.4	1.1		
WW-4-848	14-Dec-15	1512141400B	8270D	8270	3689-24-5	Sulfotep	ND	ug/L	9.4	2.0		
WW-4-848	14-Dec-15	1512141400B	8270D	8270	297-97-2	Thionazin	ND	ug/L	9.4	1.8		
WW-4-848	14-Dec-15	1512141400B	8270D	8270	108-88-3	Toluene	4.2	ug/L	NA	NA		TIC
WW-4-848	14-Dec-15	1512151044B	SM 2540 C-1997(20	SM2540C	NA	Total Dissolved Solids (TDS)	543	mg/L	10	4		
WW-4-848	14-Dec-15	1512141350B	8260C	8260_LL	630-20-6	1,1,1,2-Tetrachloroethane	ND	ug/L	0.50	0.20		
WW-4-848	14-Dec-15	1512141350B	8260C	8260_LL	71-55-6	1,1,1-Trichloroethane (TCA)	ND	ug/L	0.50	0.36		
WW-4-848	14-Dec-15	1512141350B	8260C	8260_LL	79-34-5	1,1,2,2-Tetrachloroethane	ND	ug/L	0.50	0.20		
WW-4-848	14-Dec-15	1512141350B	8260C	8260_LL	76-13-1	1,1,2-Trichloro-1,2,2-Trifluoroethane	ND	ug/L	0.50	0.31		
WW-4-848	14-Dec-15	1512141350B	8260C	8260_LL	79-00-5	1,1,2-Trichloroethane	ND	ug/L	0.50	0.23		
WW-4-848	14-Dec-15	1512141350B	8260C	8260_LL	75-34-3	1,1-Dichloroethane (1,1-DCA)	ND	ug/L	0.50	0.20		
WW-4-848	14-Dec-15	1512141350B	8260C	8260_LL	75-35-4	1,1-Dichloroethene	ND	ug/L	0.50	0.28		
WW-4-848	14-Dec-15	1512141350B	8260C	8260_LL	96-18-4	1,2,3-Trichloropropane	ND	ug/L	0.50	0.32		
WW-4-848	14-Dec-15	1512141350B	8260C	8260_LL	96-12-8	1,2-Dibromo-3-chloropropane (DBCP)	ND	ug/L	1.0	0.74		
WW-4-848	14-Dec-15	1512141350B	8260C	8260_LL	106-93-4	1,2-Dibromoethane	ND	ug/L	0.50	0.24		
WW-4-848	14-Dec-15	1512141350B	8260C	8260_LL	354-23-4	1,2-Dichloro-1,1,2-trifluoroethane (CFC 123a)	ND	ug/L	0.50	0.20		
WW-4-848	14-Dec-15	1512141350B	8260C	8260_LL	107-06-2	1,2-Dichloroethane	ND	ug/L	0.50	0.20		
WW-4-848	14-Dec-15	1512141350B	8260C	8260_LL	78-87-5	1,2-Dichloropropane	ND	ug/L	0.50	0.20		
WW-4-848	14-Dec-15	1512141350B	8260C	8260_LL	123-91-1	1,4-Dioxane	ND	ug/L	40	18		
WW-4-848	14-Dec-15	1512141350B	8260C	8260_LL	306-83-2	2,2-Dichloro-1,1,1-trifluoroethane (CFC 123)	ND	ug/L	0.50	0.32		
WW-4-848	14-Dec-15	1512141350B	8260C	8260_LL	78-93-3	2-Butanone (MEK)	ND	ug/L	5.0	0.81		
WW-4-848	14-Dec-15	1512141350B	8260C	8260_LL	126-99-8	2-Chloro-1,3-butadiene	ND	ug/L	0.50	0.22		
WW-4-848	14-Dec-15	1512141350B	8260C	8260_LL	591-78-6	2-Hexanone	ND	ug/L	5.0	0.73		
WW-4-848	14-Dec-15	1512141350B	8260C	8260_LL	78-83-1	2-Methyl-1-propanol (Isobutyl Alcohol)	ND	ug/L	100	8.1		

wellname	event_date	sample_number	spec_method	analysis	casno	analyte	result	units	PQL	MDL	extract effiency	qa_flag
WW-4-848	14-Dec-15	1512141350B	8260C	8260_LL	67-63-0	2-Propanol	ND	ug/L	40	8.6		
WW-4-848	14-Dec-15	1512141350B	8260C	8260_LL	107-05-1	3-Chloro-1-propene (Allyl Chloride)	ND	ug/L	0.50	0.25		
WW-4-848	14-Dec-15	1512141350B	8260C	8260_LL	108-10-1	4-Methyl-2-pentanone	ND	ug/L	2.0	0.20		
WW-4-848	14-Dec-15	1512141350B	8260C	8260_LL	67-64-1	Acetone	8.1	ug/L	5.0	1.3		
WW-4-848	14-Dec-15	1512141350B	8260C	8260_LL	75-05-8	Acetonitrile	ND	ug/L	25	3.7		
WW-4-848	14-Dec-15	1512141350B	8260C	8260_LL	107-02-8	Acrolein	ND	ug/L	5.0	3.0		
WW-4-848	14-Dec-15	1512141350B	8260C	8260_LL	107-13-1	Acrylonitrile	ND	ug/L	2.5	0.78		
WW-4-848	14-Dec-15	1512141350B	8260C	8260_LL	71-43-2	Benzene	ND	ug/L	0.50	0.20		
WW-4-848	14-Dec-15	1512141350B	8260C	8260_LL	75-27-4	Bromodichloromethane	ND	ug/L	0.50	0.32		
WW-4-848	14-Dec-15	1512141350B	8260C	8260_LL	75-25-2	Bromoform	ND	ug/L	1.0	0.21		
WW-4-848	14-Dec-15	1512141350B	8260C	8260_LL	74-83-9	Bromomethane	ND	ug/L	0.50	0.24		
WW-4-848	14-Dec-15	1512141350B	8260C	8260_LL	75-15-0	Carbon Disulfide	ND	ug/L	0.50	0.20		
WW-4-848	14-Dec-15	1512141350B	8260C	8260_LL	56-23-5	Carbon Tetrachloride	ND	ug/L	0.50	0.45		
WW-4-848	14-Dec-15	1512141350B	8260C	8260_LL	108-90-7	Chlorobenzene	ND	ug/L	0.50	0.20		
WW-4-848	14-Dec-15	1512141350B	8260C	8260_LL	75-00-3	Chloroethane	ND	ug/L	0.50	0.22		
WW-4-848	14-Dec-15	1512141350B	8260C	8260_LL	67-66-3	Chloroform	ND	ug/L	0.50	0.20		
WW-4-848	14-Dec-15	1512141350B	8260C	8260_LL	74-87-3	Chloromethane	ND	ug/L	0.50	0.20		
WW-4-848	14-Dec-15	1512141350B	8260C	8260_LL	156-59-2	cis-1,2-Dichloroethene	ND	ug/L	0.50	0.20		
WW-4-848	14-Dec-15	1512141350B	8260C	8260_LL	10061-01-5	cis-1,3-Dichloropropene	ND	ug/L	0.50	0.20		
WW-4-848	14-Dec-15	1512141350B	8260C	8260_LL	110-82-7	Cyclohexane	ND	ug/L	1.0	0.25		
WW-4-848	14-Dec-15	1512141350B	8260C	8260_LL	124-48-1	Dibromochloromethane	ND	ug/L	0.50	0.20		
WW-4-848	14-Dec-15	1512141350B	8260C	8260_LL	74-95-3	Dibromomethane	ND	ug/L	0.50	0.22		
WW-4-848	14-Dec-15	1512141350B	8260C	8260_LL	75-71-8	Dichlorodifluoromethane (CFC 12)	ND	ug/L	0.50	0.21		
WW-4-848	14-Dec-15	1512141350B	8260C	8260_LL	75-43-4	Dichlorofluoromethane (CFC 21)	ND	ug/L	0.50	0.20		
WW-4-848	14-Dec-15	1512141350B	8260C	8260_LL	75-09-2	Dichloromethane	ND	ug/L	0.50	0.20		
WW-4-848	14-Dec-15	1512141350B	8260C	8260_LL	97-63-2	Ethyl Methacrylate	ND	ug/L	0.50	0.20		
WW-4-848	14-Dec-15	1512141350B	8260C	8260_LL	100-41-4	Ethylbenzene	ND	ug/L	0.50	0.20		
WW-4-848	14-Dec-15	1512141350B	8260C	8260_LL	74-88-4	Iodomethane	ND	ug/L	5.0	0.27		
WW-4-848	14-Dec-15	1512141350B	8260C	8260_LL	179601-23-1	m,p-Xylenes	ND	ug/L	1.0	0.26		
WW-4-848	14-Dec-15	1512141350B	8260C	8260_LL	126-98-7	Methacrylonitrile	ND	ug/L	1.0	0.50		
WW-4-848	14-Dec-15	1512141350B	8260C	8260_LL	80-62-6	Methyl Methacrylate	ND	ug/L	0.50	0.39		
WW-4-848	14-Dec-15	1512141350B	8260C	8260_LL	1634-04-4	Methyl tert-Butyl Ether	ND	ug/L	0.50	0.20		
WW-4-848	14-Dec-15	1512141350B	8260C	8260_LL	108-87-2	Methylcyclohexane	ND	ug/L	1.0	0.27		
WW-4-848	14-Dec-15	1512141350B	8260C	8260_LL	95-47-6	o-Xylene	ND	ug/L	0.50	0.20		

wellname	event_date	sample_number	spec_method	analysis	casno	analyte	result	units	PQL	MDL	extract effiency	qa_flag
WW-4-848	14-Dec-15	1512141350B	8260C	8260_LL	107-12-0	Propionitrile	ND	ug/L	2.5	1.7		
WW-4-848	14-Dec-15	1512141350B	8260C	8260_LL	100-42-5	Styrene	ND	ug/L	0.50	0.20		
WW-4-848	14-Dec-15	1512141350B	8260C	8260_LL	127-18-4	Tetrachloroethene (PCE)	ND	ug/L	0.50	0.20		
WW-4-848	14-Dec-15	1512141350B	8260C	8260_LL	109-99-9	Tetrahydrofuran (THF)	ND	ug/L	5.0	0.66		
WW-4-848	14-Dec-15	1512141350B	8260C	8260_LL	108-88-3	Toluene	0.74	ug/L	0.50	0.20		
WW-4-848	14-Dec-15	1512141350B	8260C	8260_LL	156-60-5	trans-1,2-Dichloroethene	ND	ug/L	0.50	0.20		
WW-4-848	14-Dec-15	1512141350B	8260C	8260_LL	10061-02-6	trans-1,3-Dichloropropene	ND	ug/L	0.50	0.20		
WW-4-848	14-Dec-15	1512141350B	8260C	8260_LL	110-57-6	trans-1,4-Dichloro-2-butene	ND	ug/L	0.52	0.52		
WW-4-848	14-Dec-15	1512141350B	8260C	8260_LL	79-01-6	Trichloroethene (TCE)	ND	ug/L	0.50	0.20		
WW-4-848	14-Dec-15	1512141350B	8260C	8260_LL	75-69-4	Trichlorofluoromethane (CFC 11)	ND	ug/L	0.50	0.20		
WW-4-848	14-Dec-15	1512141350B	8260C	8260_LL	108-05-4	Vinyl Acetate	ND	ug/L	1.0	0.78		
WW-4-848	14-Dec-15	1512141350B	8260C	8260_LL	75-01-4	Vinyl Chloride	ND	ug/L	0.50	0.22		
WW-4-948	14-Dec-15	1512151101B	SM 2320 B-1997(20	ANIONS	NA	Alkalinity, Total as CaCO3	165	mg/L	2.0	0.3		
WW-4-948	14-Dec-15	1512151101B	300.0	ANIONS	16887-00-6	Chloride	49.2	mg/L	2.0	1.0		
WW-4-948	14-Dec-15	1512151101B	300.0	ANIONS	16984-48-8	Fluoride, undistilled	0.64	mg/L	0.10	0.008		
WW-4-948	14-Dec-15	1512151101B	300.0	ANIONS	14808-79-8	Sulfate	348	mg/L	8.0	0.8		
WW-4-948	14-Dec-15	1512151110B	PARAMS	PARAMS	NA	Conductivity	1050	µS/cm	NA	NA		
WW-4-948	14-Dec-15	1512151110B	PARAMS	PARAMS	NA	pH	8.09	NA	NA	NA		
WW-4-948	14-Dec-15	1512151110B	PARAMS	PARAMS	NA	Temperature	18.2	ºC	NA	NA		
WW-4-948	14-Dec-15	1512151110B	PARAMS	PARAMS	NA	Transducer	NA	ft	NA	NA		
WW-4-948	14-Dec-15	1512151110B	PARAMS	PARAMS	NA	Turbidity	0.78	NTU	NA	NA		
WW-4-948	14-Dec-15	1512141305B	PARAMS	PARAMS	NA	Conductivity	1035	µS/cm	NA	NA		
WW-4-948	14-Dec-15	1512141305B	PARAMS	PARAMS	NA	pH	8.53	NA	NA	NA		
WW-4-948	14-Dec-15	1512141305B	PARAMS	PARAMS	NA	Temperature	17.6	ºC	NA	NA		
WW-4-948	14-Dec-15	1512141305B	PARAMS	PARAMS	NA	Transducer	88.2	ft	NA	NA		
WW-4-948	14-Dec-15	1512141305B	PARAMS	PARAMS	NA	Turbidity	1.25	NTU	NA	NA		
WW-4-948	14-Dec-15	1512151100B	6010C	METALS	7429-90-5	Aluminum, Total	ND	mg/L	0.10	0.010		
WW-4-948	14-Dec-15	1512151100B	6020A	METALS	7440-36-0	Antimony, Total	0.0009	mg/L	0.0010	0.0004		J
WW-4-948	14-Dec-15	1512151100B	6020A	METALS	7440-38-2	Arsenic, Total	0.0025	mg/L	0.0010	0.0004		
WW-4-948	14-Dec-15	1512151100B	6010C	METALS	7440-39-3	Barium, Total	0.025	mg/L	0.020	0.002		
WW-4-948	14-Dec-15	1512151100B	6010C	METALS	7440-41-7	Beryllium, Total	ND	mg/L	0.0030	0.0002		
WW-4-948	14-Dec-15	1512151100B	6010C	METALS	7440-42-8	Boron, Total	0.2	mg/L	0.20	0.02		J
WW-4-948	14-Dec-15	1512151100B	6010C	METALS	7440-43-9	Cadmium, Total	ND	mg/L	0.0050	0.0002		
WW-4-948	14-Dec-15	1512151100B	6010C	METALS	7440-70-2	Calcium, Total	58.3	mg/L	1.0	0.2		
WW-4-948	14-Dec-15	1512151100B	6010C	METALS	7440-47-3	Chromium, Total	0.0006	mg/L	0.010	0.0003		J

wellname	event_date	sample_number	spec_method	analysis	casno	analyte	result	units	PQL	MDL	extract effiency	qa_flag
WW-4-948	14-Dec-15	1512151100B	6010C	METALS	7440-48-4	Cobalt, Total	ND	mg/L	0.050	0.002		
WW-4-948	14-Dec-15	1512151100B	6010C	METALS	7440-50-8	Copper, Total	ND	mg/L	0.020	0.003		
WW-4-948	14-Dec-15	1512151100B	6010C	METALS	7439-89-6	Iron, Total	ND	mg/L	0.10	0.009		
WW-4-948	14-Dec-15	1512151100B	6010C	METALS	7439-92-1	Lead, Total	ND	mg/L	0.050	0.005		
WW-4-948	14-Dec-15	1512151100B	6010C	METALS	7439-95-4	Magnesium, Total	26	mg/L	1.0	0.010		
WW-4-948	14-Dec-15	1512151100B	6010C	METALS	7439-96-5	Manganese, Total	0.086	mg/L	0.010	0.0010		
WW-4-948	14-Dec-15	1512151100B	7470A	METALS	7439-97-6	Mercury, Total	ND	mg/L	0.00020	0.00004		
WW-4-948	14-Dec-15	1512151100B	6010C	METALS	7439-98-7	Molybdenum, Total	0.011	mg/L	0.025	0.002		J
WW-4-948	14-Dec-15	1512151100B	6010C	METALS	7440-02-0	Nickel, Total	0.019	mg/L	0.040	0.002		J
WW-4-948	14-Dec-15	1512151100B	6010C	METALS	7440-09-7	Potassium, Total	3.9	mg/L	2.0	0.05		
WW-4-948	14-Dec-15	1512151100B	6010C	METALS	7782-49-2	Selenium, Total	ND	mg/L	0.010	0.005		
WW-4-948	14-Dec-15	1512151100B	6010C	METALS	7440-22-4	Silver, Total	ND	mg/L	0.010	0.0006		
WW-4-948	14-Dec-15	1512151100B	6010C	METALS	7440-23-5	Sodium, Total	134	mg/L	1.0	0.09		
WW-4-948	14-Dec-15	1512151100B	6010C	METALS	7440-24-6	Strontium, Total	1.66	mg/L	0.10	0.002		
WW-4-948	14-Dec-15	1512151100B	6020A	METALS	7440-28-0	Thallium, Total	ND	mg/L	0.0010	0.00003		
WW-4-948	14-Dec-15	1512151100B	6010C	METALS	7440-31-5	Tin, Total	ND	mg/L	0.50	0.02		
WW-4-948	14-Dec-15	1512151100B	6010C	METALS	7440-62-2	Vanadium, Total	0.018	mg/L	0.050	0.0010		J
WW-4-948	14-Dec-15	1512151100B	6010C	METALS	7440-66-6	Zinc, Total	ND	mg/L	0.020	0.007		
WW-4-948	14-Dec-15	1512141310B	TAP 01-0408-031	607	314-40-9	Bromacil	ND	ug/L	0.0095	0.0048	96	
WW-4-948	14-Dec-15	1512141310B	TAP 01-0408-031	607	4164-28-7	N-Nitrodimethylamine	ND	ug/L	0.0095	0.0048	92	
WW-4-948	14-Dec-15	1512141310B	TAP 01-0408-031	607	62-75-9	N-Nitrosodimethylamine	ND	ug/L	0.0095	0.0048	75	
WW-4-948	14-Dec-15	1512141408B	TAP 01-0403-015	NDMA_LL	4164-28-7	N-Nitrodimethylamine	1.2	ng/L	0.48	0.17		
WW-4-948	14-Dec-15	1512141408B	TAP 01-0403-015	NDMA_LL	62-75-9	N-Nitrosodimethylamine	25	ng/L	0.48	0.35		
WW-4-948	14-Dec-15	1512151107B	353.2	353.2	NA	Nitrate+Nitrite as Nitrogen	1.08	mg/L	0.050	0.003		
WW-4-948	14-Dec-15	1512151105B	6850	6850	14797-73-0	Perchlorate	0.37	ug/L	0.20	0.026		
WW-4-948	14-Dec-15	1512141410B	8270D	8270	95-94-3	1,2,4,5-Tetrachlorobenzene	ND	ug/L	9.4	1.9		
WW-4-948	14-Dec-15	1512141410B	8270D	8270	120-82-1	1,2,4-Trichlorobenzene	ND	ug/L	9.4	1.0		
WW-4-948	14-Dec-15	1512141410B	8270D	8270	95-50-1	1,2-Dichlorobenzene	ND	ug/L	9.4	1.0		
WW-4-948	14-Dec-15	1512141410B	8270D	8270	122-66-7	1,2-Diphenylhydrazine	ND	ug/L	9.4	1.0		
WW-4-948	14-Dec-15	1512141410B	8270D	8270	99-35-4	1,3,5-Trinitrobenzene	ND	ug/L	9.4	2.5		
WW-4-948	14-Dec-15	1512141410B	8270D	8270	541-73-1	1,3-Dichlorobenzene	ND	ug/L	9.4	1.0		
WW-4-948	14-Dec-15	1512141410B	8270D	8270	99-65-0	1,3-Dinitrobenzene	ND	ug/L	9.4	3.8		
WW-4-948	14-Dec-15	1512141410B	8270D	8270	106-46-7	1,4-Dichlorobenzene	ND	ug/L	9.4	1.0		

wellname	event_date	sample_number	spec_method	analysis	casno	analyte	result	units	PQL	MDL	extract effiency	qa_flag
WW-4-948	14-Dec-15	1512141410B	8270D	8270	130-15-4	1,4-Naphthoquinone	ND	ug/L	47	2.9		
WW-4-948	14-Dec-15	1512141410B	8270D	8270	106-50-3	1,4-Phenylenediamine	ND	ug/L	47	NA		*
WW-4-948	14-Dec-15	1512141410B	8270D	8270	90-12-0	1-Methylnaphthalene	ND	ug/L	9.4	1.4		
WW-4-948	14-Dec-15	1512141410B	8270D	8270	134-32-7	1-Naphthylamine	ND	ug/L	47	9.2		
WW-4-948	14-Dec-15	1512141410B	8270D	8270	002088-07-5	1-Penten-3-ol, 2-methyl-	13	ug/L	NA	NA		TIC
WW-4-948	14-Dec-15	1512141410B	8270D	8270	002088-07-5	1-Penten-3-ol, 2-methyl-	4.9	ug/L	NA	NA		TIC
WW-4-948	14-Dec-15	1512141410B	8270D	8270	58-90-2	2,3,4,6-Tetrachlorophenol	ND	ug/L	9.4	2.0		
WW-4-948	14-Dec-15	1512141410B	8270D	8270	95-95-4	2,4,5-Trichlorophenol	ND	ug/L	9.4	1.8		
WW-4-948	14-Dec-15	1512141410B	8270D	8270	88-06-2	2,4,6-Trichlorophenol	ND	ug/L	9.4	1.4		
WW-4-948	14-Dec-15	1512141410B	8270D	8270	120-83-2	2,4-Dichlorophenol	ND	ug/L	9.4	1.3		
WW-4-948	14-Dec-15	1512141410B	8270D	8270	105-67-9	2,4-Dimethylphenol	ND	ug/L	9.4	1.5		
WW-4-948	14-Dec-15	1512141410B	8270D	8270	51-28-5	2,4-Dinitrophenol	ND	ug/L	47	20		
WW-4-948	14-Dec-15	1512141410B	8270D	8270	121-14-2	2,4-Dinitrotoluene	ND	ug/L	9.4	1.6		
WW-4-948	14-Dec-15	1512141410B	8270D	8270	87-65-0	2,6-Dichlorophenol	ND	ug/L	9.4	1.0		
WW-4-948	14-Dec-15	1512141410B	8270D	8270	606-20-2	2,6-Dinitrotoluene	ND	ug/L	9.4	1.8		
WW-4-948	14-Dec-15	1512141410B	8270D	8270	53-96-3	2-Acetylaminofluorene	ND	ug/L	9.4	1.0		
WW-4-948	14-Dec-15	1512141410B	8270D	8270	91-58-7	2-Chloronaphthalene	ND	ug/L	9.4	1.0		
WW-4-948	14-Dec-15	1512141410B	8270D	8270	95-57-8	2-Chlorophenol	ND	ug/L	9.4	1.0		
WW-4-948	14-Dec-15	1512141410B	8270D	8270	99-55-8	2-Methyl-5-nitroaniline (5-Nitro-o-toluidine)	ND	ug/L	9.4	1.8		
WW-4-948	14-Dec-15	1512141410B	8270D	8270	91-57-6	2-Methylnaphthalene	ND	ug/L	9.4	1.0		
WW-4-948	14-Dec-15	1512141410B	8270D	8270	95-48-7	2-Methylphenol	ND	ug/L	9.4	1.0		
WW-4-948	14-Dec-15	1512141410B	8270D	8270	91-59-8	2-Naphthylamine	ND	ug/L	47	5.1		
WW-4-948	14-Dec-15	1512141410B	8270D	8270	88-74-4	2-Nitroaniline	ND	ug/L	47	9.1		
WW-4-948	14-Dec-15	1512141410B	8270D	8270	88-75-5	2-Nitrophenol	ND	ug/L	9.4	1.4		
WW-4-948	14-Dec-15	1512141410B	8270D	8270	000123-42-2	2-Pentanone, 4-hydroxy-4-methyl-	7.5	ug/L	NA	NA		TIC
WW-4-948	14-Dec-15	1512141410B	8270D	8270	109-06-8	2-Picoline	ND	ug/L	9.4	1.8		
WW-4-948	14-Dec-15	1512141410B	8270D	8270	15831-10-4	3- and 4-Methylphenol Coelution	ND	ug/L	9.4	2.0		
WW-4-948	14-Dec-15	1512141410B	8270D	8270	91-94-1	3,3'-Dichlorobenzidine	ND	ug/L	9.4	4.5		
WW-4-948	14-Dec-15	1512141410B	8270D	8270	119-93-7	3,3'-Dimethylbenzidine	ND	ug/L	47	19		
WW-4-948	14-Dec-15	1512141410B	8270D	8270	56-49-5	3-Methylcholanthrene	ND	ug/L	9.4	1.0		
WW-4-948	14-Dec-15	1512141410B	8270D	8270	99-09-2	3-Nitroaniline	ND	ug/L	47	7.7		
WW-4-948	14-Dec-15	1512141410B	8270D	8270	534-52-1	4,6-Dinitro-2-methylphenol	ND	ug/L	47	11		
WW-4-948	14-Dec-15	1512141410B	8270D	8270	92-67-1	4-Aminobiphenyl	ND	ug/L	47	6.9		
WW-4-948	14-Dec-15	1512141410B	8270D	8270	101-55-3	4-Bromophenyl Phenyl Ether	ND	ug/L	9.4	2.2		

wellname	event_date	sample_number	spec_method	analysis	casno	analyte	result	units	PQL	MDL	extract effiency	qa_flag
WW-4-948	14-Dec-15	1512141410B	8270D	8270	59-50-7	4-Chloro-3-methylphenol	ND	ug/L	9.4	1.2		
WW-4-948	14-Dec-15	1512141410B	8270D	8270	7005-72-3	4-Chlorophenyl Phenyl Ether	ND	ug/L	9.4	1.2		
WW-4-948	14-Dec-15	1512141410B	8270D	8270	015726-15-5	4-Heptanone, 3-methyl-	5.8	ug/L	NA	NA		TIC
WW-4-948	14-Dec-15	1512141410B	8270D	8270	000503-86-6	4H-Imidazol-4-one, 2-amino-1,5-dihydro-	45	ug/L	NA	NA		TIC RB
WW-4-948	14-Dec-15	1512141410B	8270D	8270	100-01-6	4-Nitroaniline	ND	ug/L	47	7.8		
WW-4-948	14-Dec-15	1512141410B	8270D	8270	100-02-7	4-Nitrophenol	ND	ug/L	47	5.9		
WW-4-948	14-Dec-15	1512141410B	8270D	8270	56-57-5	4-Nitroquinoline N-Oxide	ND	ug/L	47	11		
WW-4-948	14-Dec-15	1512141410B	8270D	8270	57-97-6	7,12-Dimethylbenz(a)anthracene	ND	ug/L	9.4	1.0		
WW-4-948	14-Dec-15	1512141410B	8270D	8270	122-09-8	a,a-Dimethylphenethylamine	ND	ug/L	47	4.3		
WW-4-948	14-Dec-15	1512141410B	8270D	8270	83-32-9	Acenaphthene	ND	ug/L	9.4	1.0		
WW-4-948	14-Dec-15	1512141410B	8270D	8270	208-96-8	Acenaphthylene	ND	ug/L	9.4	1.0		
WW-4-948	14-Dec-15	1512141410B	8270D	8270	208-96-8	Acenaphthylene	ND	ug/L	0.19	0.050		
WW-4-948	14-Dec-15	1512141410B	8270D	8270	98-86-2	Acetophenone	ND	ug/L	9.4	1.6		
WW-4-948	14-Dec-15	1512141410B	8270D	8270	62-53-3	Aniline	ND	ug/L	9.4	2.0		
WW-4-948	14-Dec-15	1512141410B	8270D	8270	120-12-7	Anthracene	ND	ug/L	9.4	1.0		
WW-4-948	14-Dec-15	1512141410B	8270D	8270	140-57-8	Aramite, Total	ND	ug/L	47	9.5		
WW-4-948	14-Dec-15	1512141410B	8270D	8270	56-55-3	Benz(a)anthracene	ND	ug/L	0.19	0.050		
WW-4-948	14-Dec-15	1512141410B	8270D	8270	003622-84-2	Benzenesulfonamide, N-butyl-	220	ug/L	NA	NA		TIC
WW-4-948	14-Dec-15	1512141410B	8270D	8270	92-87-5	Benzidine	ND	ug/L	94	90		
WW-4-948	14-Dec-15	1512141410B	8270D	8270	50-32-8	Benzo(a)pyrene	ND	ug/L	0.19	0.050		
WW-4-948	14-Dec-15	1512141410B	8270D	8270	205-99-2	Benzo(b)fluoranthene	ND	ug/L	0.19	0.050		
WW-4-948	14-Dec-15	1512141410B	8270D	8270	191-24-2	Benzo(g,h,i)perylene	ND	ug/L	9.4	1.0		
WW-4-948	14-Dec-15	1512141410B	8270D	8270	207-08-9	Benzo(k)fluoranthene	ND	ug/L	0.19	0.050		
WW-4-948	14-Dec-15	1512141410B	8270D	8270	100-51-6	Benzyl Alcohol	ND	ug/L	9.4	1.3		
WW-4-948	14-Dec-15	1512141410B	8270D	8270	108-60-1	Bis(1-chloroisopropyl) Ether	ND	ug/L	9.4	1.0		
WW-4-948	14-Dec-15	1512141410B	8270D	8270	111-91-1	Bis(2-chloroethoxy)methane	ND	ug/L	9.4	2.2		
WW-4-948	14-Dec-15	1512141410B	8270D	8270	111-44-4	Bis(2-chloroethyl) Ether	ND	ug/L	9.4	1.3		
WW-4-948	14-Dec-15	1512141410B	8270D	8270	117-81-7	Bis(2-ethylhexyl) Phthalate	ND	ug/L	4.7	0.57		
WW-4-948	14-Dec-15	1512141410B	8270D	8270	85-68-7	Butyl Benzyl Phthalate	ND	ug/L	9.4	2.4		
WW-4-948	14-Dec-15	1512141410B	8270D	8270	510-15-6	Chlorobenzilate	ND	ug/L	9.4	1.0		
WW-4-948	14-Dec-15	1512141410B	8270D	8270	218-01-9	Chrysene	ND	ug/L	0.19	0.050		
WW-4-948	14-Dec-15	1512141410B	8270D	8270	2303-16-4	Diallate	ND	ug/L	9.4	1.3		
WW-4-948	14-Dec-15	1512141410B	8270D	8270	53-70-3	Dibenz(a,h)anthracene	ND	ug/L	0.19	0.050		
WW-4-948	14-Dec-15	1512141410B	8270D	8270	132-64-9	Dibenzofuran	ND	ug/L	9.4	1.0		

wellname	event_date	sample_number	spec_method	analysis	casno	analyte	result	units	PQL	MDL	extract effiency	qa_flag
WW-4-948	14-Dec-15	1512141410B	8270D	8270	84-66-2	Diethyl Phthalate	ND	ug/L	9.4	1.0		
WW-4-948	14-Dec-15	1512141410B	8270D	8270	60-51-5	Dimethoate	ND	ug/L	47	8.7		
WW-4-948	14-Dec-15	1512141410B	8270D	8270	131-11-3	Dimethyl Phthalate	ND	ug/L	9.4	1.0		
WW-4-948	14-Dec-15	1512141410B	8270D	8270	84-74-2	Di-n-butyl Phthalate	ND	ug/L	9.4	1.0		
WW-4-948	14-Dec-15	1512141410B	8270D	8270	117-84-0	Di-n-octyl Phthalate	ND	ug/L	9.4	1.2		
WW-4-948	14-Dec-15	1512141410B	8270D	8270	122-39-4	Diphenylamine	ND	ug/L	9.4	NA		*
WW-4-948	14-Dec-15	1512141410B	8270D	8270	298-04-4	Disulfoton	ND	ug/L	9.4	1.2		
WW-4-948	14-Dec-15	1512141410B	8270D	8270	62-50-0	Ethyl Methanesulfonate	ND	ug/L	9.4	1.0		
WW-4-948	14-Dec-15	1512141410B	8270D	8270	206-44-0	Fluoranthene	ND	ug/L	9.4	1.0		
WW-4-948	14-Dec-15	1512141410B	8270D	8270	86-73-7	Fluorene	ND	ug/L	9.4	1.0		
WW-4-948	14-Dec-15	1512141410B	8270D	8270	000068-12-2	Formamide, N,N-dimethyl-	50	ug/L	NA	NA		TIC
WW-4-948	14-Dec-15	1512141410B	8270D	8270	118-74-1	Hexachlorobenzene	ND	ug/L	0.19	0.050		
WW-4-948	14-Dec-15	1512141410B	8270D	8270	87-68-3	Hexachlorobutadiene	ND	ug/L	9.4	1.3		
WW-4-948	14-Dec-15	1512141410B	8270D	8270	77-47-4	Hexachlorocyclopentadiene	ND	ug/L	9.4	1.0		
WW-4-948	14-Dec-15	1512141410B	8270D	8270	67-72-1	Hexachloroethane	ND	ug/L	9.4	1.2		
WW-4-948	14-Dec-15	1512141410B	8270D	8270	70-30-4	Hexachlorophene	ND	ug/L	470	55		
WW-4-948	14-Dec-15	1512141410B	8270D	8270	1888-71-7	Hexachloropropene	ND	ug/L	9.4	1.0		
WW-4-948	14-Dec-15	1512141410B	8270D	8270	193-39-5	Indeno(1,2,3-cd)pyrene	ND	ug/L	0.19	0.050		
WW-4-948	14-Dec-15	1512141410B	8270D	8270	465-73-6	Isodrin	ND	ug/L	9.4	1.8		
WW-4-948	14-Dec-15	1512141410B	8270D	8270	78-59-1	Isophorone	ND	ug/L	9.4	1.0		
WW-4-948	14-Dec-15	1512141410B	8270D	8270	120-58-1	Isosafrole	ND	ug/L	9.4	3.8		
WW-4-948	14-Dec-15	1512141410B	8270D	8270	91-80-5	Methapyrilene	ND	ug/L	47	26		
WW-4-948	14-Dec-15	1512141410B	8270D	8270	66-27-3	Methyl Methanesulfonate	ND	ug/L	9.4	1.0		
WW-4-948	14-Dec-15	1512141410B	8270D	8270	298-00-0	Methyl Parathion	ND	ug/L	9.4	1.3		
WW-4-948	14-Dec-15	1512141410B	8270D	8270	91-20-3	Naphthalene	ND	ug/L	9.4	1.0		
WW-4-948	14-Dec-15	1512141410B	8270D	8270	98-95-3	Nitrobenzene	ND	ug/L	9.4	1.6		
WW-4-948	14-Dec-15	1512141410B	8270D	8270	55-18-5	N-Nitrosodiethylamine	ND	ug/L	9.4	1.0		
WW-4-948	14-Dec-15	1512141410B	8270D	8270	62-75-9	N-Nitrosodimethylamine	ND	ug/L	9.4	1.0		
WW-4-948	14-Dec-15	1512141410B	8270D	8270	86-30-6	N-Nitrosodiphenylamine	ND	ug/L	9.4	1.0		
WW-4-948	14-Dec-15	1512141410B	8270D	8270	10595-95-6	N-Nitrosomethylethylamine	ND	ug/L	9.4	1.8		
WW-4-948	14-Dec-15	1512141410B	8270D	8270	59-89-2	N-Nitrosomorpholine	ND	ug/L	9.4	1.2		
WW-4-948	14-Dec-15	1512141410B	8270D	8270	621-64-7	N-Nitroso-N-Dipropylamine	ND	ug/L	9.4	1.3		
WW-4-948	14-Dec-15	1512141410B	8270D	8270	100-75-4	N-Nitrosopiperidine	ND	ug/L	9.4	1.1		
WW-4-948	14-Dec-15	1512141410B	8270D	8270	930-55-2	N-Nitrosopyrrolidine	ND	ug/L	9.4	1.0		
WW-4-948	14-Dec-15	1512141410B	8270D	8270	126-68-1	O,O,O-Triethyl Phosphorothioate	ND	ug/L	9.4	2.0		
WW-4-948	14-Dec-15	1512141410B	8270D	8270	95-53-4	o-Toluidine	ND	ug/L	9.4	2.1		

wellname	event_date	sample_number	spec_method	analysis	casno	analyte	result	units	PQL	MDL	extract effiency	qa_flag
WW-4-948	14-Dec-15	1512141410B	8270D	8270	56-38-2	Parathion	ND	ug/L	9.4	1.7		
WW-4-948	14-Dec-15	1512141410B	8270D	8270	106-47-8	p-Chloroaniline	ND	ug/L	9.4	1.5		
WW-4-948	14-Dec-15	1512141410B	8270D	8270	60-11-7	p-Dimethylaminoazobenzene	ND	ug/L	9.4	1.0		
WW-4-948	14-Dec-15	1512141410B	8270D	8270	608-93-5	Pentachlorobenzene	ND	ug/L	9.4	1.0		
WW-4-948	14-Dec-15	1512141410B	8270D	8270	76-01-7	Pentachloroethane	ND	ug/L	9.4	1.7		
WW-4-948	14-Dec-15	1512141410B	8270D	8270	82-68-8	Pentachloronitrobenzene (PCNB)	ND	ug/L	9.4	1.5		
WW-4-948	14-Dec-15	1512141410B	8270D	8270	62-44-2	Phenacetin	ND	ug/L	9.4	1.8		
WW-4-948	14-Dec-15	1512141410B	8270D	8270	85-01-8	Phenanthrene	ND	ug/L	9.4	1.0		
WW-4-948	14-Dec-15	1512141410B	8270D	8270	108-95-2	Phenol	ND	ug/L	9.4	1.0		
WW-4-948	14-Dec-15	1512141410B	8270D	8270	298-02-2	Phorate	ND	ug/L	9.4	1.0		
WW-4-948	14-Dec-15	1512141410B	8270D	8270	23950-58-5	Pronamide	ND	ug/L	9.4	1.3		
WW-4-948	14-Dec-15	1512141410B	8270D	8270	129-00-0	Pyrene	ND	ug/L	9.4	1.0		
WW-4-948	14-Dec-15	1512141410B	8270D	8270	110-86-1	Pyridine	ND	ug/L	47	16		
WW-4-948	14-Dec-15	1512141410B	8270D	8270	94-59-7	Safrole	ND	ug/L	9.4	1.1		
WW-4-948	14-Dec-15	1512141410B	8270D	8270	3689-24-5	Sulfotep	ND	ug/L	9.4	2.0		
WW-4-948	14-Dec-15	1512141410B	8270D	8270	297-97-2	Thionazin	ND	ug/L	9.4	1.8		
WW-4-948	14-Dec-15	1512141410B	8270D	8270	108-88-3	Toluene	4.6	ug/L	NA	NA		TIC
WW-4-948	14-Dec-15	1512151103B	SM 2540 C-1997(20	SM2540C	NA	Total Dissolved Solids (TDS)	730	mg/L	10	4		
WW-4-948	14-Dec-15	1512141405B	8260C	8260_LL	630-20-6	1,1,1,2-Tetrachloroethane	ND	ug/L	0.50	0.20		
WW-4-948	14-Dec-15	1512141405B	8260C	8260_LL	71-55-6	1,1,1-Trichloroethane (TCA)	ND	ug/L	0.50	0.36		
WW-4-948	14-Dec-15	1512141405B	8260C	8260_LL	79-34-5	1,1,2,2-Tetrachloroethane	ND	ug/L	0.50	0.20		
WW-4-948	14-Dec-15	1512141405B	8260C	8260_LL	76-13-1	1,1,2-Trichloro-1,2,2-Trifluoroethane	ND	ug/L	0.50	0.31		
WW-4-948	14-Dec-15	1512141405B	8260C	8260_LL	79-00-5	1,1,2-Trichloroethane	ND	ug/L	0.50	0.23		
WW-4-948	14-Dec-15	1512141405B	8260C	8260_LL	75-34-3	1,1-Dichloroethane (1,1-DCA)	ND	ug/L	0.50	0.20		
WW-4-948	14-Dec-15	1512141405B	8260C	8260_LL	75-35-4	1,1-Dichloroethene	ND	ug/L	0.50	0.28		
WW-4-948	14-Dec-15	1512141405B	8260C	8260_LL	96-18-4	1,2,3-Trichloropropane	ND	ug/L	0.50	0.32		
WW-4-948	14-Dec-15	1512141405B	8260C	8260_LL	96-12-8	1,2-Dibromo-3-chloropropane (DBCP)	ND	ug/L	1.0	0.74		
WW-4-948	14-Dec-15	1512141405B	8260C	8260_LL	106-93-4	1,2-Dibromoethane	ND	ug/L	0.50	0.24		
WW-4-948	14-Dec-15	1512141405B	8260C	8260_LL	354-23-4	1,2-Dichloro-1,1,2-trifluoroethane (CFC 123a)	ND	ug/L	0.50	0.20		
WW-4-948	14-Dec-15	1512141405B	8260C	8260_LL	107-06-2	1,2-Dichloroethane	ND	ug/L	0.50	0.20		
WW-4-948	14-Dec-15	1512141405B	8260C	8260_LL	78-87-5	1,2-Dichloropropane	ND	ug/L	0.50	0.20		

wellname	event_date	sample_number	spec_method	analysis	casno	analyte	result	units	PQL	MDL	extract effiency	qa_flag
WW-4-948	14-Dec-15	1512141405B	8260C	8260_LL	123-91-1	1,4-Dioxane	ND	ug/L	40	18		
WW-4-948	14-Dec-15	1512141405B	8260C	8260_LL	306-83-2	2,2-Dichloro-1,1,1-trifluoroethane (CFC 123)	ND	ug/L	0.50	0.32		
WW-4-948	14-Dec-15	1512141405B	8260C	8260_LL	78-93-3	2-Butanone (MEK)	2.8	ug/L	5.0	0.81		J
WW-4-948	14-Dec-15	1512141405B	8260C	8260_LL	126-99-8	2-Chloro-1,3-butadiene	ND	ug/L	0.50	0.22		
WW-4-948	14-Dec-15	1512141405B	8260C	8260_LL	591-78-6	2-Hexanone	ND	ug/L	5.0	0.73		
WW-4-948	14-Dec-15	1512141405B	8260C	8260_LL	78-83-1	2-Methyl-1-propanol (Isobutyl Alcohol)	ND	ug/L	100	8.1		
WW-4-948	14-Dec-15	1512141405B	8260C	8260_LL	67-63-0	2-Propanol	ND	ug/L	40	8.6		
WW-4-948	14-Dec-15	1512141405B	8260C	8260_LL	107-05-1	3-Chloro-1-propene (Allyl Chloride)	ND	ug/L	0.50	0.25		
WW-4-948	14-Dec-15	1512141405B	8260C	8260_LL	108-10-1	4-Methyl-2-pentanone	ND	ug/L	2.0	0.20		
WW-4-948	14-Dec-15	1512141405B	8260C	8260_LL	67-64-1	Acetone	5.5	ug/L	5.0	1.3		
WW-4-948	14-Dec-15	1512141405B	8260C	8260_LL	75-05-8	Acetonitrile	ND	ug/L	25	3.7		
WW-4-948	14-Dec-15	1512141405B	8260C	8260_LL	107-02-8	Acrolein	ND	ug/L	5.0	3.0		
WW-4-948	14-Dec-15	1512141405B	8260C	8260_LL	107-13-1	Acrylonitrile	ND	ug/L	2.5	0.78		
WW-4-948	14-Dec-15	1512141405B	8260C	8260_LL	71-43-2	Benzene	ND	ug/L	0.50	0.20		
WW-4-948	14-Dec-15	1512141405B	8260C	8260_LL	75-27-4	Bromodichloromethane	ND	ug/L	0.50	0.32		
WW-4-948	14-Dec-15	1512141405B	8260C	8260_LL	75-25-2	Bromoform	ND	ug/L	1.0	0.21		
WW-4-948	14-Dec-15	1512141405B	8260C	8260_LL	74-83-9	Bromomethane	0.37	ug/L	0.50	0.24		J RB
WW-4-948	14-Dec-15	1512141405B	8260C	8260_LL	75-15-0	Carbon Disulfide	ND	ug/L	0.50	0.20		
WW-4-948	14-Dec-15	1512141405B	8260C	8260_LL	56-23-5	Carbon Tetrachloride	ND	ug/L	0.50	0.45		
WW-4-948	14-Dec-15	1512141405B	8260C	8260_LL	108-90-7	Chlorobenzene	ND	ug/L	0.50	0.20		
WW-4-948	14-Dec-15	1512141405B	8260C	8260_LL	75-00-3	Chloroethane	ND	ug/L	0.50	0.22		
WW-4-948	14-Dec-15	1512141405B	8260C	8260_LL	67-66-3	Chloroform	ND	ug/L	0.50	0.20		
WW-4-948	14-Dec-15	1512141405B	8260C	8260_LL	74-87-3	Chloromethane	ND	ug/L	0.50	0.20		
WW-4-948	14-Dec-15	1512141405B	8260C	8260_LL	156-59-2	cis-1,2-Dichloroethene	ND	ug/L	0.50	0.20		
WW-4-948	14-Dec-15	1512141405B	8260C	8260_LL	10061-01-5	cis-1,3-Dichloropropene	ND	ug/L	0.50	0.20		
WW-4-948	14-Dec-15	1512141405B	8260C	8260_LL	110-82-7	Cyclohexane	ND	ug/L	1.0	0.25		
WW-4-948	14-Dec-15	1512141405B	8260C	8260_LL	124-48-1	Dibromochloromethane	ND	ug/L	0.50	0.20		
WW-4-948	14-Dec-15	1512141405B	8260C	8260_LL	74-95-3	Dibromomethane	ND	ug/L	0.50	0.22		
WW-4-948	14-Dec-15	1512141405B	8260C	8260_LL	75-71-8	Dichlorodifluoromethane (CFC 12)	ND	ug/L	0.50	0.21		
WW-4-948	14-Dec-15	1512141405B	8260C	8260_LL	75-43-4	Dichlorofluoromethane (CFC 21)	ND	ug/L	0.50	0.20		
WW-4-948	14-Dec-15	1512141405B	8260C	8260_LL	75-09-2	Dichloromethane	ND	ug/L	0.50	0.20		
WW-4-948	14-Dec-15	1512141405B	8260C	8260_LL	97-63-2	Ethyl Methacrylate	ND	ug/L	0.50	0.20		
WW-4-948	14-Dec-15	1512141405B	8260C	8260_LL	100-41-4	Ethylbenzene	ND	ug/L	0.50	0.20		

wellname	event_date	sample_number	spec_method	analysis	casno	analyte	result	units	PQL	MDL	extract effiency	qa_flag
WW-4-948	14-Dec-15	1512141405B	8260C	8260_LL	74-88-4	Iodomethane	ND	ug/L	5.0	0.27		
WW-4-948	14-Dec-15	1512141405B	8260C	8260_LL	179601-23-1	m,p-Xylenes	ND	ug/L	1.0	0.26		
WW-4-948	14-Dec-15	1512141405B	8260C	8260_LL	126-98-7	Methacrylonitrile	ND	ug/L	1.0	0.50		
WW-4-948	14-Dec-15	1512141405B	8260C	8260_LL	80-62-6	Methyl Methacrylate	ND	ug/L	0.50	0.39		
WW-4-948	14-Dec-15	1512141405B	8260C	8260_LL	1634-04-4	Methyl tert-Butyl Ether	ND	ug/L	0.50	0.20		
WW-4-948	14-Dec-15	1512141405B	8260C	8260_LL	108-87-2	Methylcyclohexane	ND	ug/L	1.0	0.27		
WW-4-948	14-Dec-15	1512141405B	8260C	8260_LL	95-47-6	o-Xylene	ND	ug/L	0.50	0.20		
WW-4-948	14-Dec-15	1512141405B	8260C	8260_LL	107-12-0	Propionitrile	ND	ug/L	2.5	1.7		
WW-4-948	14-Dec-15	1512141405B	8260C	8260_LL	100-42-5	Styrene	ND	ug/L	0.50	0.20		
WW-4-948	14-Dec-15	1512141405B	8260C	8260_LL	127-18-4	Tetrachloroethene (PCE)	ND	ug/L	0.50	0.20		
WW-4-948	14-Dec-15	1512141405B	8260C	8260_LL	109-99-9	Tetrahydrofuran (THF)	ND	ug/L	5.0	0.66		
WW-4-948	14-Dec-15	1512141405B	8260C	8260_LL	108-88-3	Toluene	12	ug/L	0.50	0.20		
WW-4-948	14-Dec-15	1512141405B	8260C	8260_LL	156-60-5	trans-1,2-Dichloroethene	ND	ug/L	0.50	0.20		
WW-4-948	14-Dec-15	1512141405B	8260C	8260_LL	10061-02-6	trans-1,3-Dichloropropene	ND	ug/L	0.50	0.20		
WW-4-948	14-Dec-15	1512141405B	8260C	8260_LL	110-57-6	trans-1,4-Dichloro-2-butene	ND	ug/L	0.52	0.52		
WW-4-948	14-Dec-15	1512141405B	8260C	8260_LL	79-01-6	Trichloroethene (TCE)	ND	ug/L	0.50	0.20		
WW-4-948	14-Dec-15	1512141405B	8260C	8260_LL	75-69-4	Trichlorofluoromethane (CFC 11)	ND	ug/L	0.50	0.20		
WW-4-948	14-Dec-15	1512141405B	8260C	8260_LL	108-05-4	Vinyl Acetate	ND	ug/L	1.0	0.78		
WW-4-948	14-Dec-15	1512141405B	8260C	8260_LL	75-01-4	Vinyl Chloride	ND	ug/L	0.50	0.22		

wellname	event_date	sample_number	spec_method	analysis	casno	analyte	result	units	PQL	MDL	extract effiency	qa_flag
WW-5-459	25-Jan-16	1601251315B	PARAMS	PARAMS	NA	pH	7.69	NA	NA	NA		
WW-5-459	25-Jan-16	1601251315B	PARAMS	PARAMS	NA	Temperature	19.2	ºC	NA	NA		
WW-5-459	25-Jan-16	1601251315B	PARAMS	PARAMS	NA	Conductivity	1032	µS/cm	NA	NA		
WW-5-459	25-Jan-16	1601251315B	PARAMS	PARAMS	NA	Turbidity	2.40	NTU	NA	NA		
WW-5-459	25-Jan-16	1601251315B	PARAMS	PARAMS	NA	Transducer	99.36	ft	NA	NA		
WW-5-459	25-Jan-16	1601251340B	8260C	8260_LL	630-20-6	1,1,1,2-Tetrachloroethane	ND	ug/L	0.50	0.20		
WW-5-459	25-Jan-16	1601251340B	8260C	8260_LL	71-55-6	1,1,1-Trichloroethane (TCA)	ND	ug/L	0.50	0.36		
WW-5-459	25-Jan-16	1601251340B	8260C	8260_LL	79-34-5	1,1,2,2-Tetrachloroethane	ND	ug/L	0.50	0.20		
WW-5-459	25-Jan-16	1601251340B	8260C	8260_LL	79-00-5	1,1,2-Trichloroethane	ND	ug/L	0.50	0.23		
WW-5-459	25-Jan-16	1601251340B	8260C	8260_LL	76-13-1	1,1,2-Trichloro-1,2,2-Trifluoroethane	ND	ug/L	0.50	0.31		
WW-5-459	25-Jan-16	1601251340B	8260C	8260_LL	75-34-3	1,1-Dichloroethane (1,1-DCA)	ND	ug/L	0.50	0.20		
WW-5-459	25-Jan-16	1601251340B	8260C	8260_LL	75-35-4	1,1-Dichloroethene	ND	ug/L	0.50	0.28		
WW-5-459	25-Jan-16	1601251340B	8260C	8260_LL	96-18-4	1,2,3-Trichloropropane	ND	ug/L	0.50	0.32		
WW-5-459	25-Jan-16	1601251340B	8260C	8260_LL	96-12-8	1,2-Dibromo-3-chloropropane (DBCP)	ND	ug/L	1.0	0.74		
WW-5-459	25-Jan-16	1601251340B	8260C	8260_LL	106-93-4	1,2-Dibromoethane	ND	ug/L	0.50	0.24		
WW-5-459	25-Jan-16	1601251340B	8260C	8260_LL	107-06-2	1,2-Dichloroethane	ND	ug/L	0.50	0.20		
WW-5-459	25-Jan-16	1601251340B	8260C	8260_LL	78-87-5	1,2-Dichloropropane	ND	ug/L	0.50	0.20		
WW-5-459	25-Jan-16	1601251340B	8260C	8260_LL	123-91-1	1,4-Dioxane	ND	ug/L	40	18		
WW-5-459	25-Jan-16	1601251340B	8260C	8260_LL	306-83-2	2,2-Dichloro-1,1,1-trifluoroethane (CFC 123)	ND	ug/L	0.50	0.32		
WW-5-459	25-Jan-16	1601251340B	8260C	8260_LL	78-93-3	2-Butanone (MEK)	ND	ug/L	5.0	0.81		
WW-5-459	25-Jan-16	1601251340B	8260C	8260_LL	126-99-8	2-Chloro-1,3-butadiene	ND	ug/L	0.50	0.22		
WW-5-459	25-Jan-16	1601251340B	8260C	8260_LL	591-78-6	2-Hexanone	ND	ug/L	5.0	0.73		
WW-5-459	25-Jan-16	1601251340B	8260C	8260_LL	78-83-1	2-Methyl-1-propanol (Isobutyl Alcohol)	ND	ug/L	100	8.1		
WW-5-459	25-Jan-16	1601251340B	8260C	8260_LL	67-63-0	2-Propanol	ND	ug/L	40	8.6		
WW-5-459	25-Jan-16	1601251340B	8260C	8260_LL	107-05-1	3-Chloro-1-propene (Allyl Chloride)	ND	ug/L	3.0	0.25		
WW-5-459	25-Jan-16	1601251340B	8260C	8260_LL	108-10-1	4-Methyl-2-pentanone	ND	ug/L	2.0	0.20		
WW-5-459	25-Jan-16	1601251340B	8260C	8260_LL	67-64-1	Acetone	8.2	ug/L	5.0	1.3		
WW-5-459	25-Jan-16	1601251340B	8260C	8260_LL	75-05-8	Acetonitrile	ND	ug/L	25	3.7		
WW-5-459	25-Jan-16	1601251340B	8260C	8260_LL	107-02-8	Acrolein	ND	ug/L	5.0	3.0		
WW-5-459	25-Jan-16	1601251340B	8260C	8260_LL	107-13-1	Acrylonitrile	ND	ug/L	2.5	0.78		
WW-5-459	25-Jan-16	1601251340B	8260C	8260_LL	71-43-2	Benzene	ND	ug/L	0.50	0.20		
WW-5-459	25-Jan-16	1601251340B	8260C	8260_LL	75-27-4	Bromodichloromethane	ND	ug/L	0.50	0.32		
WW-5-459	25-Jan-16	1601251340B	8260C	8260_LL	75-25-2	Bromoform	ND	ug/L	1.0	0.21		
WW-5-459	25-Jan-16	1601251340B	8260C	8260_LL	74-83-9	Bromomethane	ND	ug/L	0.50	0.24		
WW-5-459	25-Jan-16	1601251340B	8260C	8260_LL	75-15-0	Carbon Disulfide	ND	ug/L	0.50	0.20		
WW-5-459	25-Jan-16	1601251340B	8260C	8260_LL	56-23-5	Carbon Tetrachloride	ND	ug/L	0.50	0.45		

WW-5-459	25-Jan-16	1601251340B	8260C	8260_LL	108-90-7	Chlorobenzene	ND	ug/L	0.50	0.20		
WW-5-459	25-Jan-16	1601251340B	8260C	8260_LL	75-00-3	Chloroethane	ND	ug/L	0.50	0.22		
WW-5-459	25-Jan-16	1601251340B	8260C	8260_LL	67-66-3	Chloroform	ND	ug/L	0.50	0.20		
WW-5-459	25-Jan-16	1601251340B	8260C	8260_LL	74-87-3	Chloromethane	ND	ug/L	0.50	0.20		
WW-5-459	25-Jan-16	1601251340B	8260C	8260_LL	110-82-7	Cyclohexane	ND	ug/L	1.0	0.25		
WW-5-459	25-Jan-16	1601251340B	8260C	8260_LL	124-48-1	Dibromochloromethane	ND	ug/L	0.50	0.20		
WW-5-459	25-Jan-16	1601251340B	8260C	8260_LL	74-95-3	Dibromomethane	ND	ug/L	0.50	0.22		
WW-5-459	25-Jan-16	1601251340B	8260C	8260_LL	75-71-8	Dichlorodifluoromethane (CFC 12)	ND	ug/L	0.50	0.21		
WW-5-459	25-Jan-16	1601251340B	8260C	8260_LL	75-43-4	Dichlorofluoromethane (CFC 21)	ND	ug/L	0.50	0.20		
WW-5-459	25-Jan-16	1601251340B	8260C	8260_LL	75-09-2	Dichloromethane	ND	ug/L	0.50	0.20		
WW-5-459	25-Jan-16	1601251340B	8260C	8260_LL	97-63-2	Ethyl Methacrylate	ND	ug/L	0.50	0.20		
WW-5-459	25-Jan-16	1601251340B	8260C	8260_LL	100-41-4	Ethylbenzene	ND	ug/L	0.50	0.20		
WW-5-459	25-Jan-16	1601251340B	8260C	8260_LL	74-88-4	Iodomethane	ND	ug/L	5.0	0.27		
WW-5-459	25-Jan-16	1601251340B	8260C	8260_LL	126-98-7	Methacrylonitrile	ND	ug/L	1.0	0.50		
WW-5-459	25-Jan-16	1601251340B	8260C	8260_LL	80-62-6	Methyl Methacrylate	ND	ug/L	0.50	0.39		
WW-5-459	25-Jan-16	1601251340B	8260C	8260_LL	1634-04-4	Methyl tert-Butyl Ether	ND	ug/L	0.50	0.20		
WW-5-459	25-Jan-16	1601251340B	8260C	8260_LL	108-87-2	Methylcyclohexane	ND	ug/L	1.0	0.27		
WW-5-459	25-Jan-16	1601251340B	8260C	8260_LL	107-12-0	Propionitrile	ND	ug/L	2.5	1.7		
WW-5-459	25-Jan-16	1601251340B	8260C	8260_LL	100-42-5	Styrene	ND	ug/L	0.50	0.20		
WW-5-459	25-Jan-16	1601251340B	8260C	8260_LL	127-18-4	Tetrachloroethene (PCE)	ND	ug/L	0.50	0.20		
WW-5-459	25-Jan-16	1601251340B	8260C	8260_LL	109-99-9	Tetrahydrofuran (THF)	ND	ug/L	5.0	0.66		
WW-5-459	25-Jan-16	1601251340B	8260C	8260_LL	108-88-3	Toluene	3	ug/L	0.50	0.20		
WW-5-459	25-Jan-16	1601251340B	8260C	8260_LL	79-01-6	Trichloroethene (TCE)	ND	ug/L	0.50	0.20		
WW-5-459	25-Jan-16	1601251340B	8260C	8260_LL	75-69-4	Trichlorofluoromethane (CFC 11)	ND	ug/L	0.50	0.20		
WW-5-459	25-Jan-16	1601251340B	8260C	8260_LL	108-05-4	Vinyl Acetate	ND	ug/L	1.0	0.78		
WW-5-459	25-Jan-16	1601251340B	8260C	8260_LL	75-01-4	Vinyl Chloride	ND	ug/L	0.50	0.22		
WW-5-459	25-Jan-16	1601251340B	8260C	8260_LL	156-59-2	cis-1,2-Dichloroethene	ND	ug/L	0.50	0.20		
WW-5-459	25-Jan-16	1601251340B	8260C	8260_LL	10061-01-5	cis-1,3-Dichloropropene	ND	ug/L	0.50	0.20		
WW-5-459	25-Jan-16	1601251340B	8260C	8260_LL	179601-23-1	m,p-Xylenes	ND	ug/L	1.0	0.26		
WW-5-459	25-Jan-16	1601251340B	8260C	8260_LL	95-47-6	o-Xylene	ND	ug/L	0.50	0.20		
WW-5-459	25-Jan-16	1601251340B	8260C	8260_LL	156-60-5	trans-1,2-Dichloroethene	ND	ug/L	0.50	0.20		
WW-5-459	25-Jan-16	1601251340B	8260C	8260_LL	10061-02-6	trans-1,3-Dichloropropene	ND	ug/L	0.50	0.20		
WW-5-459	25-Jan-16	1601251340B	8260C	8260_LL	110-57-6	trans-1,4-Dichloro-2-butene	ND	ug/L	0.52	0.52		
WW-5-459	25-Jan-16	1601251340B	8260C	8260_LL	354-23-4	1,2-Dichloro-1,1,2-trifluoroethane (CFC 123a)	ND	ug/L	0.50	0.20		
WW-5-459	25-Jan-16	1601251341B	TAP 01-0408-031	607	62-75-9	N-Nitrosodimethylamine	ND	ug/L	0.0095	0.0048	69	
WW-5-459	25-Jan-16	1601251341B	TAP 01-0408-031	607	4164-28-7	N-Nitrodimethylamine	ND	ug/L	0.0095	0.0048	102	
WW-5-459	25-Jan-16	1601251341B	TAP 01-0408-031	607	314-40-9	Bromacil	ND	ug/L	0.0095	0.0048	101	

WW-5-459	25-Jan-16	1601251450B	TAP 01-0403-015	NDMA_LL	62-75-9	N-Nitrosodimethylamine	1.4	ng/L	0.48	0.35		
WW-5-459	25-Jan-16	1601251450B	TAP 01-0403-015	NDMA_LL	4164-28-7	N-Nitrodimethylamine	ND	ng/L	0.48	0.17		
WW-5-459	25-Jan-16	1601251456B	8270D	8270	95-94-3	1,2,4,5-Tetrachlorobenzene	ND	ug/L	9.4	1.9		
WW-5-459	25-Jan-16	1601251456B	8270D	8270	120-82-1	1,2,4-Trichlorobenzene	ND	ug/L	9.4	1.0		
WW-5-459	25-Jan-16	1601251456B	8270D	8270	95-50-1	1,2-Dichlorobenzene	ND	ug/L	9.4	1.0		
WW-5-459	25-Jan-16	1601251456B	8270D	8270	122-66-7	1,2-Diphenylhydrazine	ND	ug/L	9.4	1.0		
WW-5-459	25-Jan-16	1601251456B	8270D	8270	99-35-4	1,3,5-Trinitrobenzene	ND	ug/L	9.4	2.5		
WW-5-459	25-Jan-16	1601251456B	8270D	8270	541-73-1	1,3-Dichlorobenzene	ND	ug/L	9.4	1.0		
WW-5-459	25-Jan-16	1601251456B	8270D	8270	99-65-0	1,3-Dinitrobenzene	ND	ug/L	9.4	3.8		
WW-5-459	25-Jan-16	1601251456B	8270D	8270	106-46-7	1,4-Dichlorobenzene	ND	ug/L	9.4	1.0		
WW-5-459	25-Jan-16	1601251456B	8270D	8270	130-15-4	1,4-Naphthoquinone	ND	ug/L	47	2.9		
WW-5-459	25-Jan-16	1601251456B	8270D	8270	106-50-3	1,4-Phenylenediamine	ND	ug/L	47	NA		*
WW-5-459	25-Jan-16	1601251456B	8270D	8270	90-12-0	1-Methylnaphthalene	ND	ug/L	9.4	1.4		
WW-5-459	25-Jan-16	1601251456B	8270D	8270	134-32-7	1-Naphthylamine	ND	ug/L	47	9.2		
WW-5-459	25-Jan-16	1601251456B	8270D	8270	58-90-2	2,3,4,6-Tetrachlorophenol	ND	ug/L	9.4	2.0		
WW-5-459	25-Jan-16	1601251456B	8270D	8270	95-95-4	2,4,5-Trichlorophenol	ND	ug/L	9.4	1.8		
WW-5-459	25-Jan-16	1601251456B	8270D	8270	88-06-2	2,4,6-Trichlorophenol	ND	ug/L	9.4	1.4		
WW-5-459	25-Jan-16	1601251456B	8270D	8270	120-83-2	2,4-Dichlorophenol	ND	ug/L	9.4	1.3		
WW-5-459	25-Jan-16	1601251456B	8270D	8270	105-67-9	2,4-Dimethylphenol	ND	ug/L	9.4	1.5		
WW-5-459	25-Jan-16	1601251456B	8270D	8270	51-28-5	2,4-Dinitrophenol	ND	ug/L	47	20		
WW-5-459	25-Jan-16	1601251456B	8270D	8270	121-14-2	2,4-Dinitrotoluene	ND	ug/L	9.4	1.6		
WW-5-459	25-Jan-16	1601251456B	8270D	8270	87-65-0	2,6-Dichlorophenol	ND	ug/L	9.4	1.0		
WW-5-459	25-Jan-16	1601251456B	8270D	8270	606-20-2	2,6-Dinitrotoluene	ND	ug/L	9.4	1.8		
WW-5-459	25-Jan-16	1601251456B	8270D	8270	53-96-3	2-Acetylaminofluorene	ND	ug/L	9.4	1.0		
WW-5-459	25-Jan-16	1601251456B	8270D	8270	91-58-7	2-Chloronaphthalene	ND	ug/L	9.4	1.0		
WW-5-459	25-Jan-16	1601251456B	8270D	8270	95-57-8	2-Chlorophenol	ND	ug/L	9.4	1.0		
WW-5-459	25-Jan-16	1601251456B	8270D	8270	99-55-8	2-Methyl-5-nitroaniline (5-Nitro-o-toluidine)	ND	ug/L	9.4	1.8		
WW-5-459	25-Jan-16	1601251456B	8270D	8270	91-57-6	2-Methylnaphthalene	ND	ug/L	9.4	1.0		
WW-5-459	25-Jan-16	1601251456B	8270D	8270	95-48-7	2-Methylphenol	ND	ug/L	9.4	1.0		
WW-5-459	25-Jan-16	1601251456B	8270D	8270	91-59-8	2-Naphthylamine	ND	ug/L	47	5.1		
WW-5-459	25-Jan-16	1601251456B	8270D	8270	88-74-4	2-Nitroaniline	ND	ug/L	47	9.1		
WW-5-459	25-Jan-16	1601251456B	8270D	8270	88-75-5	2-Nitrophenol	ND	ug/L	9.4	1.4		
WW-5-459	25-Jan-16	1601251456B	8270D	8270	109-06-8	2-Picoline	ND	ug/L	9.4	1.8		
WW-5-459	25-Jan-16	1601251456B	8270D	8270	91-94-1	3,3'-Dichlorobenzidine	ND	ug/L	9.4	4.5		
WW-5-459	25-Jan-16	1601251456B	8270D	8270	119-93-7	3,3'-Dimethylbenzidine	ND	ug/L	47	19		
WW-5-459	25-Jan-16	1601251456B	8270D	8270	15831-10-4	3- and 4-Methylphenol Coelution	ND	ug/L	9.4	2.0		
WW-5-459	25-Jan-16	1601251456B	8270D	8270	56-49-5	3-Methylcholanthrene	ND	ug/L	9.4	1.0		
WW-5-459	25-Jan-16	1601251456B	8270D	8270	99-09-2	3-Nitroaniline	ND	ug/L	47	7.7		
WW-5-459	25-Jan-16	1601251456B	8270D	8270	534-52-1	4,6-Dinitro-2-methylphenol	ND	ug/L	47	11		

WW-5-459	25-Jan-16	1601251456B	8270D	8270	92-67-1	4-Aminobiphenyl	ND	ug/L	47	6.9		
WW-5-459	25-Jan-16	1601251456B	8270D	8270	101-55-3	4-Bromophenyl Phenyl Ether	ND	ug/L	9.4	2.2		
WW-5-459	25-Jan-16	1601251456B	8270D	8270	59-50-7	4-Chloro-3-methylphenol	ND	ug/L	9.4	1.2		
WW-5-459	25-Jan-16	1601251456B	8270D	8270	106-47-8	p-Chloroaniline	ND	ug/L	9.4	1.5		
WW-5-459	25-Jan-16	1601251456B	8270D	8270	7005-72-3	4-Chlorophenyl Phenyl Ether	ND	ug/L	9.4	1.2		
WW-5-459	25-Jan-16	1601251456B	8270D	8270	100-01-6	4-Nitroaniline	ND	ug/L	47	7.8		
WW-5-459	25-Jan-16	1601251456B	8270D	8270	100-02-7	4-Nitrophenol	ND	ug/L	47	5.9		
WW-5-459	25-Jan-16	1601251456B	8270D	8270	56-57-5	4-Nitroquinoline N-Oxide	ND	ug/L	47	11		
WW-5-459	25-Jan-16	1601251456B	8270D	8270	57-97-6	7,12-Dimethylbenz(a)anthracene	ND	ug/L	9.4	1.0		
WW-5-459	25-Jan-16	1601251456B	8270D	8270	83-32-9	Acenaphthene	ND	ug/L	9.4	1.0		
WW-5-459	25-Jan-16	1601251456B	8270D	8270	208-96-8	Acenaphthylene	ND	ug/L	9.4	1.0		
WW-5-459	25-Jan-16	1601251456B	8270D	8270	98-86-2	Acetophenone	ND	ug/L	9.4	1.6		
WW-5-459	25-Jan-16	1601251456B	8270D	8270	62-53-3	Aniline	ND	ug/L	9.4	2.0		
WW-5-459	25-Jan-16	1601251456B	8270D	8270	120-12-7	Anthracene	ND	ug/L	9.4	1.0		
WW-5-459	25-Jan-16	1601251456B	8270D	8270	140-57-8	Aramite, Total	ND	ug/L	47	9.5		
WW-5-459	25-Jan-16	1601251456B	8270D	8270	92-87-5	Benzidine	ND	ug/L	94	90		
WW-5-459	25-Jan-16	1601251456B	8270D	8270	191-24-2	Benzo(g,h,i)perylene	ND	ug/L	9.4	1.0		
WW-5-459	25-Jan-16	1601251456B	8270D	8270	100-51-6	Benzyl Alcohol	ND	ug/L	9.4	1.3		
WW-5-459	25-Jan-16	1601251456B	8270D	8270	108-60-1	Bis(1-chloroisopropyl) Ether	ND	ug/L	9.4	1.0		
WW-5-459	25-Jan-16	1601251456B	8270D	8270	111-91-1	Bis(2-chloroethoxy)methane	ND	ug/L	9.4	2.2		
WW-5-459	25-Jan-16	1601251456B	8270D	8270	111-44-4	Bis(2-chloroethyl) Ether	ND	ug/L	9.4	1.3		
WW-5-459	25-Jan-16	1601251456B	8270D	8270	85-68-7	Butyl Benzyl Phthalate	ND	ug/L	9.4	2.4		
WW-5-459	25-Jan-16	1601251456B	8270D	8270	510-15-6	Chlorobenzilate	ND	ug/L	9.4	1.0		
WW-5-459	25-Jan-16	1601251456B	8270D	8270	84-74-2	Di-n-butyl Phthalate	ND	ug/L	9.4	1.0		
WW-5-459	25-Jan-16	1601251456B	8270D	8270	117-84-0	Di-n-octyl Phthalate	ND	ug/L	9.4	1.2		
WW-5-459	25-Jan-16	1601251456B	8270D	8270	2303-16-4	Diallate	ND	ug/L	9.4	1.3		
WW-5-459	25-Jan-16	1601251456B	8270D	8270	132-64-9	Dibenzofuran	ND	ug/L	9.4	1.0		
WW-5-459	25-Jan-16	1601251456B	8270D	8270	84-66-2	Diethyl Phthalate	ND	ug/L	9.4	1.0		
WW-5-459	25-Jan-16	1601251456B	8270D	8270	60-51-5	Dimethoate	ND	ug/L	47	8.7		
WW-5-459	25-Jan-16	1601251456B	8270D	8270	131-11-3	Dimethyl Phthalate	ND	ug/L	9.4	1.0		
WW-5-459	25-Jan-16	1601251456B	8270D	8270	122-39-4	Diphenylamine	ND	ug/L	9.4	NA		*
WW-5-459	25-Jan-16	1601251456B	8270D	8270	298-04-4	Disulfoton	ND	ug/L	9.4	1.2		
WW-5-459	25-Jan-16	1601251456B	8270D	8270	62-50-0	Ethyl Methanesulfonate	ND	ug/L	9.4	1.0		
WW-5-459	25-Jan-16	1601251456B	8270D	8270	206-44-0	Fluoranthene	ND	ug/L	9.4	1.0		
WW-5-459	25-Jan-16	1601251456B	8270D	8270	86-73-7	Fluorene	ND	ug/L	9.4	1.0		
WW-5-459	25-Jan-16	1601251456B	8270D	8270	87-68-3	Hexachlorobutadiene	ND	ug/L	9.4	1.3		
WW-5-459	25-Jan-16	1601251456B	8270D	8270	77-47-4	Hexachlorocyclopentadiene	ND	ug/L	9.4	1.0		
WW-5-459	25-Jan-16	1601251456B	8270D	8270	67-72-1	Hexachloroethane	ND	ug/L	9.4	1.2		

WW-5-459	25-Jan-16	1601251456B	8270D	8270	70-30-4	Hexachlorophene	ND	ug/L	470	55		
WW-5-459	25-Jan-16	1601251456B	8270D	8270	1888-71-7	Hexachloropropene	ND	ug/L	9.4	1.0		
WW-5-459	25-Jan-16	1601251456B	8270D	8270	465-73-6	Isodrin	ND	ug/L	9.4	1.8		
WW-5-459	25-Jan-16	1601251456B	8270D	8270	78-59-1	Isophorone	ND	ug/L	9.4	1.0		
WW-5-459	25-Jan-16	1601251456B	8270D	8270	120-58-1	Isosafrole	ND	ug/L	9.4	3.8		
WW-5-459	25-Jan-16	1601251456B	8270D	8270	91-80-5	Methapyrilene	ND	ug/L	47	26		
WW-5-459	25-Jan-16	1601251456B	8270D	8270	66-27-3	Methyl Methanesulfonate	ND	ug/L	9.4	1.0		
WW-5-459	25-Jan-16	1601251456B	8270D	8270	298-00-0	Methyl Parathion	ND	ug/L	9.4	1.3		
WW-5-459	25-Jan-16	1601251456B	8270D	8270	621-64-7	N-Nitroso-N-Dipropylamine	ND	ug/L	9.4	1.3		
WW-5-459	25-Jan-16	1601251456B	8270D	8270	55-18-5	N-Nitrosodiethylamine	ND	ug/L	9.4	1.0		
WW-5-459	25-Jan-16	1601251456B	8270D	8270	62-75-9	N-Nitrosodimethylamine	ND	ug/L	9.4	1.0		
WW-5-459	25-Jan-16	1601251456B	8270D	8270	86-30-6	N-Nitrosodiphenylamine	ND	ug/L	9.4	1.0		
WW-5-459	25-Jan-16	1601251456B	8270D	8270	10595-95-6	N-Nitrosomethylethylamine	ND	ug/L	9.4	1.8		
WW-5-459	25-Jan-16	1601251456B	8270D	8270	59-89-2	N-Nitrosomorpholine	ND	ug/L	9.4	1.2		
WW-5-459	25-Jan-16	1601251456B	8270D	8270	100-75-4	N-Nitrosopiperidine	ND	ug/L	9.4	1.1		
WW-5-459	25-Jan-16	1601251456B	8270D	8270	930-55-2	N-Nitrosopyrrolidine	ND	ug/L	9.4	1.0		
WW-5-459	25-Jan-16	1601251456B	8270D	8270	91-20-3	Naphthalene	ND	ug/L	9.4	1.0		
WW-5-459	25-Jan-16	1601251456B	8270D	8270	98-95-3	Nitrobenzene	ND	ug/L	9.4	1.6		
WW-5-459	25-Jan-16	1601251456B	8270D	8270	126-68-1	O,O,O-Triethyl Phosphorothioate	ND	ug/L	9.4	2.0		
WW-5-459	25-Jan-16	1601251456B	8270D	8270	56-38-2	Parathion	ND	ug/L	9.4	1.7		
WW-5-459	25-Jan-16	1601251456B	8270D	8270	608-93-5	Pentachlorobenzene	ND	ug/L	9.4	1.0		
WW-5-459	25-Jan-16	1601251456B	8270D	8270	76-01-7	Pentachloroethane	ND	ug/L	9.4	1.7		
WW-5-459	25-Jan-16	1601251456B	8270D	8270	82-68-8	Pentachloronitrobenzene (PCNB)	ND	ug/L	9.4	1.5		
WW-5-459	25-Jan-16	1601251456B	8270D	8270	62-44-2	Phenacetin	ND	ug/L	9.4	1.8		
WW-5-459	25-Jan-16	1601251456B	8270D	8270	85-01-8	Phenanthrene	ND	ug/L	9.4	1.0		
WW-5-459	25-Jan-16	1601251456B	8270D	8270	108-95-2	Phenol	ND	ug/L	9.4	1.0		
WW-5-459	25-Jan-16	1601251456B	8270D	8270	298-02-2	Phorate	ND	ug/L	9.4	1.0		
WW-5-459	25-Jan-16	1601251456B	8270D	8270	23950-58-5	Pronamide	ND	ug/L	9.4	1.3		
WW-5-459	25-Jan-16	1601251456B	8270D	8270	129-00-0	Pyrene	ND	ug/L	9.4	1.0		
WW-5-459	25-Jan-16	1601251456B	8270D	8270	110-86-1	Pyridine	ND	ug/L	47	16		
WW-5-459	25-Jan-16	1601251456B	8270D	8270	94-59-7	Safrole	ND	ug/L	9.4	1.1		
WW-5-459	25-Jan-16	1601251456B	8270D	8270	3689-24-5	Sulfotep	ND	ug/L	9.4	2.0		
WW-5-459	25-Jan-16	1601251456B	8270D	8270	297-97-2	Thionazin	ND	ug/L	9.4	1.8		
WW-5-459	25-Jan-16	1601251456B	8270D	8270	122-09-8	a,a-Dimethylphenethylamine	ND	ug/L	47	4.3		
WW-5-459	25-Jan-16	1601251456B	8270D	8270	95-53-4	o-Toluidine	ND	ug/L	9.4	2.1		
WW-5-459	25-Jan-16	1601251456B	8270D	8270	60-11-7	p-Dimethylaminoazobenzene	ND	ug/L	9.4	1.0		
WW-5-459	25-Jan-16	1601251456B	8270D	8270	TIC	Unknown	5.2	ug/L	NA	NA		TIC
WW-5-459	25-Jan-16	1601251456B	8270D	8270	TIC	Unknown	5.4	ug/L	NA	NA		TIC
WW-5-459	25-Jan-16	1601251456B	8270D	8270	015176-21-3	1,4-Dioxane, 2,5-dimethyl-	16	ug/L	NA	NA		TIC

WW-5-459	25-Jan-16	1601251456B	8270D	8270	TIC	Unknown	9.3	ug/L	NA	NA		TIC
WW-5-459	25-Jan-16	1601251456B	8270D	8270	003622-84-2	Benzenesulfonamide, N-butyl-	43	ug/L	NA	NA		TIC
WW-5-459	25-Jan-16	1601251456B	8270D	8270	208-96-8	Acenaphthylene	ND	ug/L	0.19	0.050		
WW-5-459	25-Jan-16	1601251456B	8270D	8270	56-55-3	Benz(a)anthracene	ND	ug/L	0.19	0.050		
WW-5-459	25-Jan-16	1601251456B	8270D	8270	50-32-8	Benzo(a)pyrene	ND	ug/L	0.19	0.050		
WW-5-459	25-Jan-16	1601251456B	8270D	8270	205-99-2	Benzo(b)fluoranthene	ND	ug/L	0.19	0.050		
WW-5-459	25-Jan-16	1601251456B	8270D	8270	207-08-9	Benzo(k)fluoranthene	ND	ug/L	0.19	0.050		
WW-5-459	25-Jan-16	1601251456B	8270D	8270	117-81-7	Bis(2-ethylhexyl) Phthalate	ND	ug/L	4.7	0.57		
WW-5-459	25-Jan-16	1601251456B	8270D	8270	218-01-9	Chrysene	ND	ug/L	0.19	0.050		
WW-5-459	25-Jan-16	1601251456B	8270D	8270	53-70-3	Dibenz(a,h)anthracene	ND	ug/L	0.19	0.050		
WW-5-459	25-Jan-16	1601251456B	8270D	8270	118-74-1	Hexachlorobenzene	ND	ug/L	0.19	0.050		
WW-5-459	25-Jan-16	1601251456B	8270D	8270	193-39-5	Indeno(1,2,3-cd)pyrene	ND	ug/L	0.19	0.050		
WW-5-459	25-Jan-16	1601260950B	6010C	METALS	7429-90-5	Aluminum, Total	ND	mg/L	0.10	0.010		
WW-5-459	25-Jan-16	1601260950B	6020A	METALS	7440-36-0	Antimony, Total	ND	mg/L	0.0010	0.0004		
WW-5-459	25-Jan-16	1601260950B	6020A	METALS	7440-38-2	Arsenic, Total	0.0014	mg/L	0.0010	0.0004		
WW-5-459	25-Jan-16	1601260950B	6010C	METALS	7440-39-3	Barium, Total	0.022	mg/L	0.020	0.002		
WW-5-459	25-Jan-16	1601260950B	6010C	METALS	7440-41-7	Beryllium, Total	ND	mg/L	0.0030	0.0002		
WW-5-459	25-Jan-16	1601260950B	6010C	METALS	7440-42-8	Boron, Total	0.2	mg/L	0.20	0.02		J
WW-5-459	25-Jan-16	1601260950B	6010C	METALS	7440-43-9	Cadmium, Total	ND	mg/L	0.0050	0.0002		
WW-5-459	25-Jan-16	1601260950B	6010C	METALS	7440-70-2	Calcium, Total	68.2	mg/L	1.0	0.2		
WW-5-459	25-Jan-16	1601260950B	6010C	METALS	7440-47-3	Chromium, Total	0.002	mg/L	0.010	0.0003		J
WW-5-459	25-Jan-16	1601260950B	6010C	METALS	7440-48-4	Cobalt, Total	ND	mg/L	0.050	0.002		
WW-5-459	25-Jan-16	1601260950B	6010C	METALS	7440-50-8	Copper, Total	ND	mg/L	0.020	0.003		
WW-5-459	25-Jan-16	1601260950B	6010C	METALS	7439-89-6	Iron, Total	ND	mg/L	0.10	0.009		
WW-5-459	25-Jan-16	1601260950B	6010C	METALS	7439-92-1	Lead, Total	ND	mg/L	0.050	0.005		
WW-5-459	25-Jan-16	1601260950B	6010C	METALS	7439-95-4	Magnesium, Total	40.5	mg/L	1.0	0.010		
WW-5-459	25-Jan-16	1601260950B	6010C	METALS	7439-96-5	Manganese, Total	ND	mg/L	0.010	0.0010		
WW-5-459	25-Jan-16	1601260950B	7470A	METALS	7439-97-6	Mercury, Total	ND	mg/L	0.00020	0.00004		
WW-5-459	25-Jan-16	1601260950B	6010C	METALS	7439-98-7	Molybdenum, Total	0.01	mg/L	0.025	0.002		J
WW-5-459	25-Jan-16	1601260950B	6010C	METALS	7440-02-0	Nickel, Total	0.003	mg/L	0.040	0.002		J
WW-5-459	25-Jan-16	1601260950B	6010C	METALS	7440-09-7	Potassium, Total	3.8	mg/L	2.0	0.05		
WW-5-459	25-Jan-16	1601260950B	6010C	METALS	7782-49-2	Selenium, Total	ND	mg/L	0.010	0.005		
WW-5-459	25-Jan-16	1601260950B	6010C	METALS	7440-22-4	Silver, Total	ND	mg/L	0.010	0.0006		
WW-5-459	25-Jan-16	1601260950B	6010C	METALS	7440-23-5	Sodium, Total	99.1	mg/L	1.0	0.09		
WW-5-459	25-Jan-16	1601260950B	6010C	METALS	7440-24-6	Strontium, Total	2.31	mg/L	0.10	0.002		
WW-5-459	25-Jan-16	1601260950B	6020A	METALS	7440-28-0	Thallium, Total	0.00005	mg/L	0.0010	0.00003		J
WW-5-459	25-Jan-16	1601260950B	6010C	METALS	7440-31-5	Tin, Total	ND	mg/L	0.50	0.02		
WW-5-459	25-Jan-16	1601260950B	6010C	METALS	7440-62-2	Vanadium, Total	0.011	mg/L	0.050	0.0010		J
WW-5-459	25-Jan-16	1601260950B	6010C	METALS	7440-66-6	Zinc, Total	0.051	mg/L	0.020	0.007		
WW-5-459	25-Jan-16	1601260951B	SM 2320 B-1997(20	ANIONS	NA	Alkalinity, Total as CaCO3	144	mg/L	2.0	0.3		

WW-5-459	25-Jan-16	1601260951B	300.0	ANIONS	16887-00-6	Chloride	49.2	mg/L	2.0	1.0		
WW-5-459	25-Jan-16	1601260951B	300.0	ANIONS	16984-48-8	Fluoride, undistilled	0.68	mg/L	0.10	0.008		
WW-5-459	25-Jan-16	1601260951B	300.0	ANIONS	14808-79-8	Sulfate	327	mg/L	10	1		
WW-5-459	25-Jan-16	1601261040B	SM 2540 C-1997(20	SM2540C	NA	Total Dissolved Solids (TDS)	698	mg/L	10	4		
WW-5-459	25-Jan-16	1601261041B	6850	6850	14797-73-0	Perchlorate	0.56	ug/L	0.20	0.026		
WW-5-459	25-Jan-16	1601261042B	353.2	353.2	NA	Nitrate+Nitrite as Nitrogen	2.4	mg/L	0.10	0.005		
WW-5-459	25-Jan-16	1601261500B	PARAMS	PARAMS	NA	pH	7.16	NA	NA	NA		
WW-5-459	25-Jan-16	1601261500B	PARAMS	PARAMS	NA	Temperature	20.2	ºC	NA	NA		
WW-5-459	25-Jan-16	1601261500B	PARAMS	PARAMS	NA	Conductivity	1021	µS/cm	NA	NA		
WW-5-459	25-Jan-16	1601261500B	PARAMS	PARAMS	NA	Turbidity	0.67	NTU	NA	NA		
WW-5-459	25-Jan-16	1601261500B	PARAMS	PARAMS	NA	Transducer	NA	ft	NA	NA		
WW-5-579	25-Jan-16	1601251345B	PARAMS	PARAMS	NA	pH	8.07	NA	NA	NA		
WW-5-579	25-Jan-16	1601251345B	PARAMS	PARAMS	NA	Temperature	18.6	ºC	NA	NA		
WW-5-579	25-Jan-16	1601251345B	PARAMS	PARAMS	NA	Conductivity	1046	µS/cm	NA	NA		
WW-5-579	25-Jan-16	1601251345B	PARAMS	PARAMS	NA	Turbidity	0.81	NTU	NA	NA		
WW-5-579	25-Jan-16	1601251345B	PARAMS	PARAMS	NA	Transducer	99.36	ft	NA	NA		
WW-5-579	25-Jan-16	1601251400B	8260C	8260_LL	630-20-6	1,1,1,2-Tetrachloroethane	ND	ug/L	0.50	0.20		
WW-5-579	25-Jan-16	1601251400B	8260C	8260_LL	71-55-6	1,1,1-Trichloroethane (TCA)	ND	ug/L	0.50	0.36		
WW-5-579	25-Jan-16	1601251400B	8260C	8260_LL	79-34-5	1,1,2,2-Tetrachloroethane	ND	ug/L	0.50	0.20		
WW-5-579	25-Jan-16	1601251400B	8260C	8260_LL	79-00-5	1,1,2-Trichloroethane	ND	ug/L	0.50	0.23		
WW-5-579	25-Jan-16	1601251400B	8260C	8260_LL	76-13-1	1,1,2-Trichloro-1,2,2-Trifluoroethane	ND	ug/L	0.50	0.31		
WW-5-579	25-Jan-16	1601251400B	8260C	8260_LL	75-34-3	1,1-Dichloroethane (1,1-DCA)	ND	ug/L	0.50	0.20		
WW-5-579	25-Jan-16	1601251400B	8260C	8260_LL	75-35-4	1,1-Dichloroethene	ND	ug/L	0.50	0.28		
WW-5-579	25-Jan-16	1601251400B	8260C	8260_LL	96-18-4	1,2,3-Trichloropropane	ND	ug/L	0.50	0.32		
WW-5-579	25-Jan-16	1601251400B	8260C	8260_LL	96-12-8	1,2-Dibromo-3-chloropropane (DBCP)	ND	ug/L	1.0	0.74		
WW-5-579	25-Jan-16	1601251400B	8260C	8260_LL	106-93-4	1,2-Dibromoethane	ND	ug/L	0.50	0.24		
WW-5-579	25-Jan-16	1601251400B	8260C	8260_LL	107-06-2	1,2-Dichloroethane	ND	ug/L	0.50	0.20		
WW-5-579	25-Jan-16	1601251400B	8260C	8260_LL	78-87-5	1,2-Dichloropropane	ND	ug/L	0.50	0.20		
WW-5-579	25-Jan-16	1601251400B	8260C	8260_LL	123-91-1	1,4-Dioxane	ND	ug/L	40	18		
WW-5-579	25-Jan-16	1601251400B	8260C	8260_LL	306-83-2	2,2-Dichloro-1,1,1-trifluoroethane (CFC 123)	ND	ug/L	0.50	0.32		
WW-5-579	25-Jan-16	1601251400B	8260C	8260_LL	78-93-3	2-Butanone (MEK)	ND	ug/L	5.0	0.81		
WW-5-579	25-Jan-16	1601251400B	8260C	8260_LL	126-99-8	2-Chloro-1,3-butadiene	ND	ug/L	0.50	0.22		
WW-5-579	25-Jan-16	1601251400B	8260C	8260_LL	591-78-6	2-Hexanone	ND	ug/L	5.0	0.73		
WW-5-579	25-Jan-16	1601251400B	8260C	8260_LL	78-83-1	2-Methyl-1-propanol (Isobutyl Alcohol)	ND	ug/L	100	8.1		
WW-5-579	25-Jan-16	1601251400B	8260C	8260_LL	67-63-0	2-Propanol	ND	ug/L	40	8.6		
WW-5-579	25-Jan-16	1601251400B	8260C	8260_LL	107-05-1	3-Chloro-1-propene (Allyl Chloride)	ND	ug/L	3.0	0.25		
WW-5-579	25-Jan-16	1601251400B	8260C	8260_LL	108-10-1	4-Methyl-2-pentanone	ND	ug/L	2.0	0.20		

WW-5-579	25-Jan-16	1601251400B	8260C	8260_LL	67-64-1	Acetone	6.5	ug/L	5.0	1.3		
WW-5-579	25-Jan-16	1601251400B	8260C	8260_LL	75-05-8	Acetonitrile	ND	ug/L	25	3.7		
WW-5-579	25-Jan-16	1601251400B	8260C	8260_LL	107-02-8	Acrolein	ND	ug/L	5.0	3.0		
WW-5-579	25-Jan-16	1601251400B	8260C	8260_LL	107-13-1	Acrylonitrile	ND	ug/L	2.5	0.78		
WW-5-579	25-Jan-16	1601251400B	8260C	8260_LL	71-43-2	Benzene	ND	ug/L	0.50	0.20		
WW-5-579	25-Jan-16	1601251400B	8260C	8260_LL	75-27-4	Bromodichloromethane	ND	ug/L	0.50	0.32		
WW-5-579	25-Jan-16	1601251400B	8260C	8260_LL	75-25-2	Bromoform	ND	ug/L	1.0	0.21		
WW-5-579	25-Jan-16	1601251400B	8260C	8260_LL	74-83-9	Bromomethane	ND	ug/L	0.50	0.24		
WW-5-579	25-Jan-16	1601251400B	8260C	8260_LL	75-15-0	Carbon Disulfide	ND	ug/L	0.50	0.20		
WW-5-579	25-Jan-16	1601251400B	8260C	8260_LL	56-23-5	Carbon Tetrachloride	ND	ug/L	0.50	0.45		
WW-5-579	25-Jan-16	1601251400B	8260C	8260_LL	108-90-7	Chlorobenzene	ND	ug/L	0.50	0.20		
WW-5-579	25-Jan-16	1601251400B	8260C	8260_LL	75-00-3	Chloroethane	ND	ug/L	0.50	0.22		
WW-5-579	25-Jan-16	1601251400B	8260C	8260_LL	67-66-3	Chloroform	ND	ug/L	0.50	0.20		
WW-5-579	25-Jan-16	1601251400B	8260C	8260_LL	74-87-3	Chloromethane	ND	ug/L	0.50	0.20		
WW-5-579	25-Jan-16	1601251400B	8260C	8260_LL	110-82-7	Cyclohexane	ND	ug/L	1.0	0.25		
WW-5-579	25-Jan-16	1601251400B	8260C	8260_LL	124-48-1	Dibromochloromethane	ND	ug/L	0.50	0.20		
WW-5-579	25-Jan-16	1601251400B	8260C	8260_LL	74-95-3	Dibromomethane	ND	ug/L	0.50	0.22		
WW-5-579	25-Jan-16	1601251400B	8260C	8260_LL	75-71-8	Dichlorodifluoromethane (CFC 12)	ND	ug/L	0.50	0.21		
WW-5-579	25-Jan-16	1601251400B	8260C	8260_LL	75-43-4	Dichlorofluoromethane (CFC 21)	ND	ug/L	0.50	0.20		
WW-5-579	25-Jan-16	1601251400B	8260C	8260_LL	75-09-2	Dichloromethane	ND	ug/L	0.50	0.20		
WW-5-579	25-Jan-16	1601251400B	8260C	8260_LL	97-63-2	Ethyl Methacrylate	ND	ug/L	0.50	0.20		
WW-5-579	25-Jan-16	1601251400B	8260C	8260_LL	100-41-4	Ethylbenzene	ND	ug/L	0.50	0.20		
WW-5-579	25-Jan-16	1601251400B	8260C	8260_LL	74-88-4	Iodomethane	ND	ug/L	5.0	0.27		
WW-5-579	25-Jan-16	1601251400B	8260C	8260_LL	126-98-7	Methacrylonitrile	ND	ug/L	1.0	0.50		
WW-5-579	25-Jan-16	1601251400B	8260C	8260_LL	80-62-6	Methyl Methacrylate	ND	ug/L	0.50	0.39		
WW-5-579	25-Jan-16	1601251400B	8260C	8260_LL	1634-04-4	Methyl tert-Butyl Ether	ND	ug/L	0.50	0.20		
WW-5-579	25-Jan-16	1601251400B	8260C	8260_LL	108-87-2	Methylcyclohexane	ND	ug/L	1.0	0.27		
WW-5-579	25-Jan-16	1601251400B	8260C	8260_LL	107-12-0	Propionitrile	ND	ug/L	2.5	1.7		
WW-5-579	25-Jan-16	1601251400B	8260C	8260_LL	100-42-5	Styrene	ND	ug/L	0.50	0.20		
WW-5-579	25-Jan-16	1601251400B	8260C	8260_LL	127-18-4	Tetrachloroethene (PCE)	ND	ug/L	0.50	0.20		
WW-5-579	25-Jan-16	1601251400B	8260C	8260_LL	109-99-9	Tetrahydrofuran (THF)	ND	ug/L	5.0	0.66		
WW-5-579	25-Jan-16	1601251400B	8260C	8260_LL	108-88-3	Toluene	0.33	ug/L	0.50	0.20		J
WW-5-579	25-Jan-16	1601251400B	8260C	8260_LL	79-01-6	Trichloroethene (TCE)	ND	ug/L	0.50	0.20		
WW-5-579	25-Jan-16	1601251400B	8260C	8260_LL	75-69-4	Trichlorofluoromethane (CFC 11)	ND	ug/L	0.50	0.20		
WW-5-579	25-Jan-16	1601251400B	8260C	8260_LL	108-05-4	Vinyl Acetate	ND	ug/L	1.0	0.78		
WW-5-579	25-Jan-16	1601251400B	8260C	8260_LL	75-01-4	Vinyl Chloride	ND	ug/L	0.50	0.22		
WW-5-579	25-Jan-16	1601251400B	8260C	8260_LL	156-59-2	cis-1,2-Dichloroethene	ND	ug/L	0.50	0.20		
WW-5-579	25-Jan-16	1601251400B	8260C	8260_LL	10061-01-5	cis-1,3-Dichloropropene	ND	ug/L	0.50	0.20		
WW-5-579	25-Jan-16	1601251400B	8260C	8260_LL	179601-23-1	m,p-Xylenes	ND	ug/L	1.0	0.26		
WW-5-579	25-Jan-16	1601251400B	8260C	8260_LL	95-47-6	o-Xylene	ND	ug/L	0.50	0.20		
WW-5-579	25-Jan-16	1601251400B	8260C	8260_LL	156-60-5	trans-1,2-Dichloroethene	ND	ug/L	0.50	0.20		
WW-5-579	25-Jan-16	1601251400B	8260C	8260_LL	10061-02-6	trans-1,3-Dichloropropene	ND	ug/L	0.50	0.20		

WW-5-579	25-Jan-16	1601251400B	8260C	8260_LL	110-57-6	trans-1,4-Dichloro-2-butene	ND	ug/L	0.52	0.52		
WW-5-579	25-Jan-16	1601251400B	8260C	8260_LL	354-23-4	1,2-Dichloro-1,1,2-trifluoroethane (CFC 123a)	ND	ug/L	0.50	0.20		
WW-5-579	25-Jan-16	1601251401B	TAP 01-0408-031	607	62-75-9	N-Nitrosodimethylamine	ND	ug/L	0.0094	0.0047	69	
WW-5-579	25-Jan-16	1601251401B	TAP 01-0408-031	607	4164-28-7	N-Nitrodimethylamine	ND	ug/L	0.0094	0.0047	102	
WW-5-579	25-Jan-16	1601251401B	TAP 01-0408-031	607	314-40-9	Bromacil	ND	ug/L	0.0094	0.0047	101	
WW-5-579	25-Jan-16	1601261001B	TAP 01-0403-015	NDMA_LL	62-75-9	N-Nitrosodimethylamine	ND	ng/L	0.48	0.35		
WW-5-579	25-Jan-16	1601261001B	TAP 01-0403-015	NDMA_LL	4164-28-7	N-Nitrodimethylamine	ND	ng/L	0.48	0.17		
WW-5-579	25-Jan-16	1601261050B	8270D	8270	99-55-8	2-Methyl-5-nitroaniline (5-Nitro-o-toluidine)	ND	ug/L	9.4	1.8		
WW-5-579	25-Jan-16	1601261050B	8270D	8270	91-57-6	2-Methylnaphthalene	ND	ug/L	9.4	1.0		
WW-5-579	25-Jan-16	1601261050B	8270D	8270	95-48-7	2-Methylphenol	ND	ug/L	9.4	1.0		
WW-5-579	25-Jan-16	1601261050B	8270D	8270	91-59-8	2-Naphthylamine	ND	ug/L	47	5.1		
WW-5-579	25-Jan-16	1601261050B	8270D	8270	88-74-4	2-Nitroaniline	ND	ug/L	47	9.1		
WW-5-579	25-Jan-16	1601261050B	8270D	8270	88-75-5	2-Nitrophenol	ND	ug/L	9.4	1.4		
WW-5-579	25-Jan-16	1601261050B	8270D	8270	109-06-8	2-Picoline	ND	ug/L	9.4	1.8		
WW-5-579	25-Jan-16	1601261050B	8270D	8270	91-94-1	3,3'-Dichlorobenzidine	ND	ug/L	9.4	4.5		
WW-5-579	25-Jan-16	1601261050B	8270D	8270	119-93-7	3,3'-Dimethylbenzidine	ND	ug/L	47	19		
WW-5-579	25-Jan-16	1601261050B	8270D	8270	15831-10-4	3- and 4-Methylphenol Coelution	ND	ug/L	9.4	2.0		
WW-5-579	25-Jan-16	1601261050B	8270D	8270	56-49-5	3-Methylcholanthrene	ND	ug/L	9.4	1.0		
WW-5-579	25-Jan-16	1601261050B	8270D	8270	99-09-2	3-Nitroaniline	ND	ug/L	47	7.7		
WW-5-579	25-Jan-16	1601261050B	8270D	8270	534-52-1	4,6-Dinitro-2-methylphenol	ND	ug/L	47	11		
WW-5-579	25-Jan-16	1601261050B	8270D	8270	95-94-3	1,2,4,5-Tetrachlorobenzene	ND	ug/L	9.4	1.9		
WW-5-579	25-Jan-16	1601261050B	8270D	8270	120-82-1	1,2,4-Trichlorobenzene	ND	ug/L	9.4	1.0		
WW-5-579	25-Jan-16	1601261050B	8270D	8270	95-50-1	1,2-Dichlorobenzene	ND	ug/L	9.4	1.0		
WW-5-579	25-Jan-16	1601261050B	8270D	8270	122-66-7	1,2-Diphenylhydrazine	ND	ug/L	9.4	1.0		
WW-5-579	25-Jan-16	1601261050B	8270D	8270	99-35-4	1,3,5-Trinitrobenzene	ND	ug/L	9.4	2.5		
WW-5-579	25-Jan-16	1601261050B	8270D	8270	541-73-1	1,3-Dichlorobenzene	ND	ug/L	9.4	1.0		
WW-5-579	25-Jan-16	1601261050B	8270D	8270	99-65-0	1,3-Dinitrobenzene	ND	ug/L	9.4	3.8		
WW-5-579	25-Jan-16	1601261050B	8270D	8270	106-46-7	1,4-Dichlorobenzene	ND	ug/L	9.4	1.0		
WW-5-579	25-Jan-16	1601261050B	8270D	8270	130-15-4	1,4-Naphthoquinone	ND	ug/L	47	2.9		
WW-5-579	25-Jan-16	1601261050B	8270D	8270	106-50-3	1,4-Phenylenediamine	ND	ug/L	47	NA		*
WW-5-579	25-Jan-16	1601261050B	8270D	8270	90-12-0	1-Methylnaphthalene	ND	ug/L	9.4	1.4		
WW-5-579	25-Jan-16	1601261050B	8270D	8270	134-32-7	1-Naphthylamine	ND	ug/L	47	9.2		
WW-5-579	25-Jan-16	1601261050B	8270D	8270	58-90-2	2,3,4,6-Tetrachlorophenol	ND	ug/L	9.4	2.0		
WW-5-579	25-Jan-16	1601261050B	8270D	8270	95-95-4	2,4,5-Trichlorophenol	ND	ug/L	9.4	1.8		

WW-5-579	25-Jan-16	1601261050B	8270D	8270	88-06-2	2,4,6-Trichlorophenol	ND	ug/L	9.4	1.4		
WW-5-579	25-Jan-16	1601261050B	8270D	8270	120-83-2	2,4-Dichlorophenol	ND	ug/L	9.4	1.3		
WW-5-579	25-Jan-16	1601261050B	8270D	8270	105-67-9	2,4-Dimethylphenol	ND	ug/L	9.4	1.5		
WW-5-579	25-Jan-16	1601261050B	8270D	8270	51-28-5	2,4-Dinitrophenol	ND	ug/L	47	20		
WW-5-579	25-Jan-16	1601261050B	8270D	8270	121-14-2	2,4-Dinitrotoluene	ND	ug/L	9.4	1.6		
WW-5-579	25-Jan-16	1601261050B	8270D	8270	87-65-0	2,6-Dichlorophenol	ND	ug/L	9.4	1.0		
WW-5-579	25-Jan-16	1601261050B	8270D	8270	606-20-2	2,6-Dinitrotoluene	ND	ug/L	9.4	1.8		
WW-5-579	25-Jan-16	1601261050B	8270D	8270	53-96-3	2-Acetylaminofluorene	ND	ug/L	9.4	1.0		
WW-5-579	25-Jan-16	1601261050B	8270D	8270	91-58-7	2-Chloronaphthalene	ND	ug/L	9.4	1.0		
WW-5-579	25-Jan-16	1601261050B	8270D	8270	95-57-8	2-Chlorophenol	ND	ug/L	9.4	1.0		
WW-5-579	25-Jan-16	1601261050B	8270D	8270	92-67-1	4-Aminobiphenyl	ND	ug/L	47	6.9		
WW-5-579	25-Jan-16	1601261050B	8270D	8270	101-55-3	4-Bromophenyl Phenyl Ether	ND	ug/L	9.4	2.2		
WW-5-579	25-Jan-16	1601261050B	8270D	8270	59-50-7	4-Chloro-3-methylphenol	ND	ug/L	9.4	1.2		
WW-5-579	25-Jan-16	1601261050B	8270D	8270	106-47-8	p-Chloroaniline	ND	ug/L	9.4	1.5		
WW-5-579	25-Jan-16	1601261050B	8270D	8270	7005-72-3	4-Chlorophenyl Phenyl Ether	ND	ug/L	9.4	1.2		
WW-5-579	25-Jan-16	1601261050B	8270D	8270	100-01-6	4-Nitroaniline	ND	ug/L	47	7.8		
WW-5-579	25-Jan-16	1601261050B	8270D	8270	100-02-7	4-Nitrophenol	ND	ug/L	47	5.9		
WW-5-579	25-Jan-16	1601261050B	8270D	8270	56-57-5	4-Nitroquinoline N-Oxide	ND	ug/L	47	11		
WW-5-579	25-Jan-16	1601261050B	8270D	8270	57-97-6	7,12-Dimethylbenz(a)anthracene	ND	ug/L	9.4	1.0		
WW-5-579	25-Jan-16	1601261050B	8270D	8270	83-32-9	Acenaphthene	ND	ug/L	9.4	1.0		
WW-5-579	25-Jan-16	1601261050B	8270D	8270	208-96-8	Acenaphthylene	ND	ug/L	9.4	1.0		
WW-5-579	25-Jan-16	1601261050B	8270D	8270	98-86-2	Acetophenone	ND	ug/L	9.4	1.6		
WW-5-579	25-Jan-16	1601261050B	8270D	8270	62-53-3	Aniline	ND	ug/L	9.4	2.0		
WW-5-579	25-Jan-16	1601261050B	8270D	8270	120-12-7	Anthracene	ND	ug/L	9.4	1.0		
WW-5-579	25-Jan-16	1601261050B	8270D	8270	140-57-8	Aramite, Total	ND	ug/L	47	9.5		
WW-5-579	25-Jan-16	1601261050B	8270D	8270	92-87-5	Benzidine	ND	ug/L	94	90		
WW-5-579	25-Jan-16	1601261050B	8270D	8270	191-24-2	Benzo(g,h,i)perylene	ND	ug/L	9.4	1.0		
WW-5-579	25-Jan-16	1601261050B	8270D	8270	100-51-6	Benzyl Alcohol	ND	ug/L	9.4	1.3		
WW-5-579	25-Jan-16	1601261050B	8270D	8270	108-60-1	Bis(1-chloroisopropyl) Ether	ND	ug/L	9.4	1.0		
WW-5-579	25-Jan-16	1601261050B	8270D	8270	111-91-1	Bis(2-chloroethoxy)methane	ND	ug/L	9.4	2.2		
WW-5-579	25-Jan-16	1601261050B	8270D	8270	111-44-4	Bis(2-chloroethyl) Ether	ND	ug/L	9.4	1.3		
WW-5-579	25-Jan-16	1601261050B	8270D	8270	85-68-7	Butyl Benzyl Phthalate	ND	ug/L	9.4	2.4		
WW-5-579	25-Jan-16	1601261050B	8270D	8270	510-15-6	Chlorobenzilate	ND	ug/L	9.4	1.0		
WW-5-579	25-Jan-16	1601261050B	8270D	8270	84-74-2	Di-n-butyl Phthalate	ND	ug/L	9.4	1.0		
WW-5-579	25-Jan-16	1601261050B	8270D	8270	117-84-0	Di-n-octyl Phthalate	ND	ug/L	9.4	1.2		
WW-5-579	25-Jan-16	1601261050B	8270D	8270	2303-16-4	Diallate	ND	ug/L	9.4	1.3		
WW-5-579	25-Jan-16	1601261050B	8270D	8270	132-64-9	Dibenzofuran	ND	ug/L	9.4	1.0		
WW-5-579	25-Jan-16	1601261050B	8270D	8270	84-66-2	Diethyl Phthalate	ND	ug/L	9.4	1.0		
WW-5-579	25-Jan-16	1601261050B	8270D	8270	60-51-5	Dimethoate	ND	ug/L	47	8.7		

WW-5-579	25-Jan-16	1601261050B	8270D	8270	131-11-3	Dimethyl Phthalate	ND	ug/L	9.4	1.0		
WW-5-579	25-Jan-16	1601261050B	8270D	8270	122-39-4	Diphenylamine	ND	ug/L	9.4	NA		*
WW-5-579	25-Jan-16	1601261050B	8270D	8270	298-04-4	Disulfoton	ND	ug/L	9.4	1.2		
WW-5-579	25-Jan-16	1601261050B	8270D	8270	62-50-0	Ethyl Methanesulfonate	ND	ug/L	9.4	1.0		
WW-5-579	25-Jan-16	1601261050B	8270D	8270	206-44-0	Fluoranthene	ND	ug/L	9.4	1.0		
WW-5-579	25-Jan-16	1601261050B	8270D	8270	86-73-7	Fluorene	ND	ug/L	9.4	1.0		
WW-5-579	25-Jan-16	1601261050B	8270D	8270	87-68-3	Hexachlorobutadiene	ND	ug/L	9.4	1.3		
WW-5-579	25-Jan-16	1601261050B	8270D	8270	77-47-4	Hexachlorocyclopentadiene	ND	ug/L	9.4	1.0		
WW-5-579	25-Jan-16	1601261050B	8270D	8270	67-72-1	Hexachloroethane	ND	ug/L	9.4	1.2		
WW-5-579	25-Jan-16	1601261050B	8270D	8270	70-30-4	Hexachlorophene	ND	ug/L	470	55		
WW-5-579	25-Jan-16	1601261050B	8270D	8270	1888-71-7	Hexachloropropene	ND	ug/L	9.4	1.0		
WW-5-579	25-Jan-16	1601261050B	8270D	8270	465-73-6	Isodrin	ND	ug/L	9.4	1.8		
WW-5-579	25-Jan-16	1601261050B	8270D	8270	78-59-1	Isophorone	ND	ug/L	9.4	1.0		
WW-5-579	25-Jan-16	1601261050B	8270D	8270	120-58-1	Isosafrole	ND	ug/L	9.4	3.8		
WW-5-579	25-Jan-16	1601261050B	8270D	8270	91-80-5	Methapyrilene	ND	ug/L	47	26		
WW-5-579	25-Jan-16	1601261050B	8270D	8270	66-27-3	Methyl Methanesulfonate	ND	ug/L	9.4	1.0		
WW-5-579	25-Jan-16	1601261050B	8270D	8270	298-00-0	Methyl Parathion	ND	ug/L	9.4	1.3		
WW-5-579	25-Jan-16	1601261050B	8270D	8270	621-64-7	N-Nitroso-N-Dipropylamine	ND	ug/L	9.4	1.3		
WW-5-579	25-Jan-16	1601261050B	8270D	8270	55-18-5	N-Nitrosodiethylamine	ND	ug/L	9.4	1.0		
WW-5-579	25-Jan-16	1601261050B	8270D	8270	62-75-9	N-Nitrosodimethylamine	ND	ug/L	9.4	1.0		
WW-5-579	25-Jan-16	1601261050B	8270D	8270	86-30-6	N-Nitrosodiphenylamine	ND	ug/L	9.4	1.0		
WW-5-579	25-Jan-16	1601261050B	8270D	8270	10595-95-6	N-Nitrosomethylethylamine	ND	ug/L	9.4	1.8		
WW-5-579	25-Jan-16	1601261050B	8270D	8270	59-89-2	N-Nitrosomorpholine	ND	ug/L	9.4	1.2		
WW-5-579	25-Jan-16	1601261050B	8270D	8270	100-75-4	N-Nitrosopiperidine	ND	ug/L	9.4	1.1		
WW-5-579	25-Jan-16	1601261050B	8270D	8270	930-55-2	N-Nitrosopyrrolidine	ND	ug/L	9.4	1.0		
WW-5-579	25-Jan-16	1601261050B	8270D	8270	91-20-3	Naphthalene	ND	ug/L	9.4	1.0		
WW-5-579	25-Jan-16	1601261050B	8270D	8270	98-95-3	Nitrobenzene	ND	ug/L	9.4	1.6		
WW-5-579	25-Jan-16	1601261050B	8270D	8270	126-68-1	O,O,O-Triethyl Phosphorothioate	ND	ug/L	9.4	2.0		
WW-5-579	25-Jan-16	1601261050B	8270D	8270	56-38-2	Parathion	ND	ug/L	9.4	1.7		
WW-5-579	25-Jan-16	1601261050B	8270D	8270	608-93-5	Pentachlorobenzene	ND	ug/L	9.4	1.0		
WW-5-579	25-Jan-16	1601261050B	8270D	8270	76-01-7	Pentachloroethane	ND	ug/L	9.4	1.7		
WW-5-579	25-Jan-16	1601261050B	8270D	8270	82-68-8	Pentachloronitrobenzene (PCNB)	ND	ug/L	9.4	1.5		
WW-5-579	25-Jan-16	1601261050B	8270D	8270	62-44-2	Phenacetin	ND	ug/L	9.4	1.8		
WW-5-579	25-Jan-16	1601261050B	8270D	8270	85-01-8	Phenanthrene	ND	ug/L	9.4	1.0		
WW-5-579	25-Jan-16	1601261050B	8270D	8270	108-95-2	Phenol	ND	ug/L	9.4	1.0		
WW-5-579	25-Jan-16	1601261050B	8270D	8270	298-02-2	Phorate	ND	ug/L	9.4	1.0		
WW-5-579	25-Jan-16	1601261050B	8270D	8270	23950-58-5	Pronamide	ND	ug/L	9.4	1.3		
WW-5-579	25-Jan-16	1601261050B	8270D	8270	129-00-0	Pyrene	ND	ug/L	9.4	1.0		
WW-5-579	25-Jan-16	1601261050B	8270D	8270	110-86-1	Pyridine	ND	ug/L	47	16		
WW-5-579	25-Jan-16	1601261050B	8270D	8270	94-59-7	Safrole	ND	ug/L	9.4	1.1		

WW-5-579	25-Jan-16	1601261050B	8270D	8270	3689-24-5	Sulfotep	ND	ug/L	9.4	2.0		
WW-5-579	25-Jan-16	1601261050B	8270D	8270	297-97-2	Thionazin	ND	ug/L	9.4	1.8		
WW-5-579	25-Jan-16	1601261050B	8270D	8270	122-09-8	a,a-Dimethylphenethylamine	ND	ug/L	47	4.3		
WW-5-579	25-Jan-16	1601261050B	8270D	8270	95-53-4	o-Toluidine	ND	ug/L	9.4	2.1		
WW-5-579	25-Jan-16	1601261050B	8270D	8270	60-11-7	p-Dimethylaminoazobenzene	ND	ug/L	9.4	1.0		
WW-5-579	25-Jan-16	1601261050B	8270D	8270	015176-21-3	1,4-Dioxane, 2,5-dimethyl-	11	ug/L	NA	NA		TIC
WW-5-579	25-Jan-16	1601261050B	8270D	8270	TIC	Unknown	6.5	ug/L	NA	NA		TIC
WW-5-579	25-Jan-16	1601261050B	8270D	8270	TIC	Unknown	11	ug/L	NA	NA		TIC
WW-5-579	25-Jan-16	1601261050B	8270D	8270	208-96-8	Acenaphthylene	ND	ug/L	0.19	0.050		
WW-5-579	25-Jan-16	1601261050B	8270D	8270	56-55-3	Benz(a)anthracene	ND	ug/L	0.19	0.050		
WW-5-579	25-Jan-16	1601261050B	8270D	8270	50-32-8	Benzo(a)pyrene	ND	ug/L	0.19	0.050		
WW-5-579	25-Jan-16	1601261050B	8270D	8270	205-99-2	Benzo(b)fluoranthene	ND	ug/L	0.19	0.050		
WW-5-579	25-Jan-16	1601261050B	8270D	8270	207-08-9	Benzo(k)fluoranthene	ND	ug/L	0.19	0.050		
WW-5-579	25-Jan-16	1601261050B	8270D	8270	117-81-7	Bis(2-ethylhexyl) Phthalate	ND	ug/L	4.7	0.57		
WW-5-579	25-Jan-16	1601261050B	8270D	8270	218-01-9	Chrysene	ND	ug/L	0.19	0.050		
WW-5-579	25-Jan-16	1601261050B	8270D	8270	53-70-3	Dibenz(a,h)anthracene	ND	ug/L	0.19	0.050		
WW-5-579	25-Jan-16	1601261050B	8270D	8270	118-74-1	Hexachlorobenzene	ND	ug/L	0.19	0.050		
WW-5-579	25-Jan-16	1601261050B	8270D	8270	193-39-5	Indeno(1,2,3-cd)pyrene	ND	ug/L	0.19	0.050		
WW-5-579	25-Jan-16	1601261051B	6010C	METALS	7429-90-5	Aluminum, Total	ND	mg/L	0.10	0.010		
WW-5-579	25-Jan-16	1601261051B	6020A	METALS	7440-36-0	Antimony, Total	ND	mg/L	0.0010	0.0004		
WW-5-579	25-Jan-16	1601261051B	6020A	METALS	7440-38-2	Arsenic, Total	0.0019	mg/L	0.0010	0.0004		
WW-5-579	25-Jan-16	1601261051B	6010C	METALS	7440-39-3	Barium, Total	0.018	mg/L	0.020	0.002		J
WW-5-579	25-Jan-16	1601261051B	6010C	METALS	7440-41-7	Beryllium, Total	ND	mg/L	0.0030	0.0002		
WW-5-579	25-Jan-16	1601261051B	6010C	METALS	7440-42-8	Boron, Total	0.19	mg/L	0.20	0.02		J
WW-5-579	25-Jan-16	1601261051B	6010C	METALS	7440-43-9	Cadmium, Total	ND	mg/L	0.0050	0.0002		
WW-5-579	25-Jan-16	1601261051B	6010C	METALS	7440-70-2	Calcium, Total	68.7	mg/L	1.0	0.2		
WW-5-579	25-Jan-16	1601261051B	6010C	METALS	7440-47-3	Chromium, Total	0.003	mg/L	0.010	0.0003		J
WW-5-579	25-Jan-16	1601261051B	6010C	METALS	7440-48-4	Cobalt, Total	ND	mg/L	0.050	0.002		
WW-5-579	25-Jan-16	1601261051B	6010C	METALS	7440-50-8	Copper, Total	ND	mg/L	0.020	0.003		
WW-5-579	25-Jan-16	1601261051B	6010C	METALS	7439-89-6	Iron, Total	ND	mg/L	0.10	0.009		
WW-5-579	25-Jan-16	1601261051B	6010C	METALS	7439-92-1	Lead, Total	ND	mg/L	0.050	0.005		
WW-5-579	25-Jan-16	1601261051B	6010C	METALS	7439-95-4	Magnesium, Total	39.1	mg/L	1.0	0.010		
WW-5-579	25-Jan-16	1601261051B	6010C	METALS	7439-96-5	Manganese, Total	ND	mg/L	0.010	0.0010		
WW-5-579	25-Jan-16	1601261051B	7470A	METALS	7439-97-6	Mercury, Total	ND	mg/L	0.00020	0.00004		
WW-5-579	25-Jan-16	1601261051B	6010C	METALS	7439-98-7	Molybdenum, Total	0.01	mg/L	0.025	0.002		J
WW-5-579	25-Jan-16	1601261051B	6010C	METALS	7440-02-0	Nickel, Total	0.003	mg/L	0.040	0.002		J
WW-5-579	25-Jan-16	1601261051B	6010C	METALS	7440-09-7	Potassium, Total	3.8	mg/L	2.0	0.05		
WW-5-579	25-Jan-16	1601261051B	6010C	METALS	7782-49-2	Selenium, Total	ND	mg/L	0.010	0.005		
WW-5-579	25-Jan-16	1601261051B	6010C	METALS	7440-22-4	Silver, Total	ND	mg/L	0.010	0.0006		
WW-5-579	25-Jan-16	1601261051B	6010C	METALS	7440-23-5	Sodium, Total	101	mg/L	1.0	0.09		
WW-5-579	25-Jan-16	1601261051B	6010C	METALS	7440-24-6	Strontium, Total	2.38	mg/L	0.10	0.002		

WW-5-579	25-Jan-16	1601261051B	6020A	METALS	7440-28-0	Thallium, Total	ND	mg/L	0.0010	0.00003		
WW-5-579	25-Jan-16	1601261051B	6010C	METALS	7440-31-5	Tin, Total	ND	mg/L	0.50	0.02		
WW-5-579	25-Jan-16	1601261051B	6010C	METALS	7440-62-2	Vanadium, Total	0.012	mg/L	0.050	0.0010		J
WW-5-579	25-Jan-16	1601261051B	6010C	METALS	7440-66-6	Zinc, Total	0.032	mg/L	0.020	0.007		
WW-5-579	25-Jan-16	1601261350B	SM 2320 B-1997(20	ANIONS	NA	Alkalinity, Total as CaCO3	152	mg/L	2.0	0.3		
WW-5-579	25-Jan-16	1601261350B	300.0	ANIONS	16887-00-6	Chloride	46.4	mg/L	2.0	1.0		
WW-5-579	25-Jan-16	1601261350B	300.0	ANIONS	16984-48-8	Fluoride, undistilled	0.72	mg/L	0.10	0.008		
WW-5-579	25-Jan-16	1601261350B	300.0	ANIONS	14808-79-8	Sulfate	324	mg/L	10	1		
WW-5-579	25-Jan-16	1601261351B	SM 2540 C-1997(20	SM2540C	NA	Total Dissolved Solids (TDS)	722	mg/L	10	4		
WW-5-579	25-Jan-16	1601261352B	6850	6850	14797-73-0	Perchlorate	0.45	ug/L	0.20	0.026		
WW-5-579	25-Jan-16	1601261353B	353.2	353.2	NA	Nitrate+Nitrite as Nitrogen	1.96	mg/L	0.050	0.003		
WW-5-579	25-Jan-16	1601261453B	PARAMS	PARAMS	NA	pH	7.67	NA	NA	NA		
WW-5-579	25-Jan-16	1601261453B	PARAMS	PARAMS	NA	Temperature	18.8	ºC	NA	NA		
WW-5-579	25-Jan-16	1601261453B	PARAMS	PARAMS	NA	Conductivity	1027	µS/cm	NA	NA		
WW-5-579	25-Jan-16	1601261453B	PARAMS	PARAMS	NA	Turbidity	0.99	NTU	NA	NA		
WW-5-579	25-Jan-16	1601261453B	PARAMS	PARAMS	NA	Transducer	NA	ft	NA	NA		
WW-5-809	25-Jan-16	1601251402B	PARAMS	PARAMS	NA	pH	8.14	NA	NA	NA		
WW-5-809	25-Jan-16	1601251402B	PARAMS	PARAMS	NA	Temperature	17.8	ºC	NA	NA		
WW-5-809	25-Jan-16	1601251402B	PARAMS	PARAMS	NA	Conductivity	961	µS/cm	NA	NA		
WW-5-809	25-Jan-16	1601251402B	PARAMS	PARAMS	NA	Turbidity	1.07	NTU	NA	NA		
WW-5-809	25-Jan-16	1601251402B	PARAMS	PARAMS	NA	Transducer	99.36	ft	NA	NA		
WW-5-809	25-Jan-16	1601251415B	8260C	8260_LL	107-13-1	Acrylonitrile	ND	ug/L	2.5	0.78		
WW-5-809	25-Jan-16	1601251415B	8260C	8260_LL	71-43-2	Benzene	ND	ug/L	0.50	0.20		
WW-5-809	25-Jan-16	1601251415B	8260C	8260_LL	75-27-4	Bromodichloromethane	ND	ug/L	0.50	0.32		
WW-5-809	25-Jan-16	1601251415B	8260C	8260_LL	75-25-2	Bromoform	ND	ug/L	1.0	0.21		
WW-5-809	25-Jan-16	1601251415B	8260C	8260_LL	74-83-9	Bromomethane	ND	ug/L	0.50	0.24		
WW-5-809	25-Jan-16	1601251415B	8260C	8260_LL	75-15-0	Carbon Disulfide	ND	ug/L	0.50	0.20		
WW-5-809	25-Jan-16	1601251415B	8260C	8260_LL	56-23-5	Carbon Tetrachloride	ND	ug/L	0.50	0.45		
WW-5-809	25-Jan-16	1601251415B	8260C	8260_LL	108-90-7	Chlorobenzene	ND	ug/L	0.50	0.20		
WW-5-809	25-Jan-16	1601251415B	8260C	8260_LL	75-00-3	Chloroethane	ND	ug/L	0.50	0.22		
WW-5-809	25-Jan-16	1601251415B	8260C	8260_LL	67-66-3	Chloroform	ND	ug/L	0.50	0.20		
WW-5-809	25-Jan-16	1601251415B	8260C	8260_LL	74-87-3	Chloromethane	ND	ug/L	0.50	0.20		
WW-5-809	25-Jan-16	1601251415B	8260C	8260_LL	110-82-7	Cyclohexane	ND	ug/L	1.0	0.25		
WW-5-809	25-Jan-16	1601251415B	8260C	8260_LL	124-48-1	Dibromochloromethane	ND	ug/L	0.50	0.20		
WW-5-809	25-Jan-16	1601251415B	8260C	8260_LL	74-95-3	Dibromomethane	ND	ug/L	0.50	0.22		
WW-5-809	25-Jan-16	1601251415B	8260C	8260_LL	75-71-8	Dichlorodifluoromethane (CFC 12)	ND	ug/L	0.50	0.21		
WW-5-809	25-Jan-16	1601251415B	8260C	8260_LL	75-43-4	Dichlorofluoromethane (CFC 21)	ND	ug/L	0.50	0.20		
WW-5-809	25-Jan-16	1601251415B	8260C	8260_LL	75-09-2	Dichloromethane	ND	ug/L	0.50	0.20		
WW-5-809	25-Jan-16	1601251415B	8260C	8260_LL	97-63-2	Ethyl Methacrylate	ND	ug/L	0.50	0.20		
WW-5-809	25-Jan-16	1601251415B	8260C	8260_LL	100-41-4	Ethylbenzene	ND	ug/L	0.50	0.20		

WW-5-809	25-Jan-16	1601251415B	8260C	8260_LL	74-88-4	Iodomethane	ND	ug/L	5.0	0.27		
WW-5-809	25-Jan-16	1601251415B	8260C	8260_LL	126-98-7	Methacrylonitrile	ND	ug/L	1.0	0.50		
WW-5-809	25-Jan-16	1601251415B	8260C	8260_LL	80-62-6	Methyl Methacrylate	ND	ug/L	0.50	0.39		
WW-5-809	25-Jan-16	1601251415B	8260C	8260_LL	1634-04-4	Methyl tert-Butyl Ether	ND	ug/L	0.50	0.20		
WW-5-809	25-Jan-16	1601251415B	8260C	8260_LL	108-87-2	Methylcyclohexane	ND	ug/L	1.0	0.27		
WW-5-809	25-Jan-16	1601251415B	8260C	8260_LL	107-12-0	Propionitrile	ND	ug/L	2.5	1.7		
WW-5-809	25-Jan-16	1601251415B	8260C	8260_LL	100-42-5	Styrene	ND	ug/L	0.50	0.20		
WW-5-809	25-Jan-16	1601251415B	8260C	8260_LL	127-18-4	Tetrachloroethene (PCE)	ND	ug/L	0.50	0.20		
WW-5-809	25-Jan-16	1601251415B	8260C	8260_LL	109-99-9	Tetrahydrofuran (THF)	ND	ug/L	5.0	0.66		
WW-5-809	25-Jan-16	1601251415B	8260C	8260_LL	108-88-3	Toluene	0.47	ug/L	0.50	0.20		J
WW-5-809	25-Jan-16	1601251415B	8260C	8260_LL	79-01-6	Trichloroethene (TCE)	ND	ug/L	0.50	0.20		
WW-5-809	25-Jan-16	1601251415B	8260C	8260_LL	75-69-4	Trichlorofluoromethane (CFC 11)	ND	ug/L	0.50	0.20		
WW-5-809	25-Jan-16	1601251415B	8260C	8260_LL	108-05-4	Vinyl Acetate	ND	ug/L	1.0	0.78		
WW-5-809	25-Jan-16	1601251415B	8260C	8260_LL	75-01-4	Vinyl Chloride	ND	ug/L	0.50	0.22		
WW-5-809	25-Jan-16	1601251415B	8260C	8260_LL	156-59-2	cis-1,2-Dichloroethene	ND	ug/L	0.50	0.20		
WW-5-809	25-Jan-16	1601251415B	8260C	8260_LL	10061-01-5	cis-1,3-Dichloropropene	ND	ug/L	0.50	0.20		
WW-5-809	25-Jan-16	1601251415B	8260C	8260_LL	179601-23-1	m,p-Xylenes	ND	ug/L	1.0	0.26		
WW-5-809	25-Jan-16	1601251415B	8260C	8260_LL	95-47-6	o-Xylene	ND	ug/L	0.50	0.20		
WW-5-809	25-Jan-16	1601251415B	8260C	8260_LL	156-60-5	trans-1,2-Dichloroethene	ND	ug/L	0.50	0.20		
WW-5-809	25-Jan-16	1601251415B	8260C	8260_LL	10061-02-6	trans-1,3-Dichloropropene	ND	ug/L	0.50	0.20		
WW-5-809	25-Jan-16	1601251415B	8260C	8260_LL	110-57-6	trans-1,4-Dichloro-2-butene	ND	ug/L	0.52	0.52		
WW-5-809	25-Jan-16	1601251415B	8260C	8260_LL	354-23-4	1,2-Dichloro-1,1,2-trifluoroethane (CFC 123a)	ND	ug/L	0.50	0.20		
WW-5-809	25-Jan-16	1601251415B	8260C	8260_LL	630-20-6	1,1,1,2-Tetrachloroethane	ND	ug/L	0.50	0.20		
WW-5-809	25-Jan-16	1601251415B	8260C	8260_LL	71-55-6	1,1,1-Trichloroethane (TCA)	ND	ug/L	0.50	0.36		
WW-5-809	25-Jan-16	1601251415B	8260C	8260_LL	79-34-5	1,1,2,2-Tetrachloroethane	ND	ug/L	0.50	0.20		
WW-5-809	25-Jan-16	1601251415B	8260C	8260_LL	79-00-5	1,1,2-Trichloroethane	ND	ug/L	0.50	0.23		
WW-5-809	25-Jan-16	1601251415B	8260C	8260_LL	76-13-1	1,1,2-Trichloro-1,2,2-Trifluoroethane	ND	ug/L	0.50	0.31		
WW-5-809	25-Jan-16	1601251415B	8260C	8260_LL	75-34-3	1,1-Dichloroethane (1,1-DCA)	ND	ug/L	0.50	0.20		
WW-5-809	25-Jan-16	1601251415B	8260C	8260_LL	75-35-4	1,1-Dichloroethene	ND	ug/L	0.50	0.28		
WW-5-809	25-Jan-16	1601251415B	8260C	8260_LL	96-18-4	1,2,3-Trichloropropane	ND	ug/L	0.50	0.32		
WW-5-809	25-Jan-16	1601251415B	8260C	8260_LL	96-12-8	1,2-Dibromo-3-chloropropane (DBCP)	ND	ug/L	1.0	0.74		
WW-5-809	25-Jan-16	1601251415B	8260C	8260_LL	106-93-4	1,2-Dibromoethane	ND	ug/L	0.50	0.24		
WW-5-809	25-Jan-16	1601251415B	8260C	8260_LL	107-06-2	1,2-Dichloroethane	ND	ug/L	0.50	0.20		
WW-5-809	25-Jan-16	1601251415B	8260C	8260_LL	78-87-5	1,2-Dichloropropane	ND	ug/L	0.50	0.20		
WW-5-809	25-Jan-16	1601251415B	8260C	8260_LL	123-91-1	1,4-Dioxane	ND	ug/L	40	18		
WW-5-809	25-Jan-16	1601251415B	8260C	8260_LL	306-83-2	2,2-Dichloro-1,1,1-trifluoroethane (CFC 123)	ND	ug/L	0.50	0.32		
WW-5-809	25-Jan-16	1601251415B	8260C	8260_LL	78-93-3	2-Butanone (MEK)	ND	ug/L	5.0	0.81		

WW-5-809	25-Jan-16	1601251415B	8260C	8260_LL	126-99-8	2-Chloro-1,3-butadiene	ND	ug/L	0.50	0.22		
WW-5-809	25-Jan-16	1601251415B	8260C	8260_LL	591-78-6	2-Hexanone	ND	ug/L	5.0	0.73		
WW-5-809	25-Jan-16	1601251415B	8260C	8260_LL	78-83-1	2-Methyl-1-propanol (Isobutyl Alcohol)	ND	ug/L	100	8.1		
WW-5-809	25-Jan-16	1601251415B	8260C	8260_LL	67-63-0	2-Propanol	ND	ug/L	40	8.6		
WW-5-809	25-Jan-16	1601251415B	8260C	8260_LL	107-05-1	3-Chloro-1-propene (Allyl Chloride)	ND	ug/L	3.0	0.25		
WW-5-809	25-Jan-16	1601251415B	8260C	8260_LL	108-10-1	4-Methyl-2-pentanone	ND	ug/L	2.0	0.20		
WW-5-809	25-Jan-16	1601251415B	8260C	8260_LL	67-64-1	Acetone	7.1	ug/L	5.0	1.3		
WW-5-809	25-Jan-16	1601251415B	8260C	8260_LL	75-05-8	Acetonitrile	ND	ug/L	25	3.7		
WW-5-809	25-Jan-16	1601251415B	8260C	8260_LL	107-02-8	Acrolein	ND	ug/L	5.0	3.0		
WW-5-809	25-Jan-16	1601251416B	TAP 01-0408-031	607	62-75-9	N-Nitrosodimethylamine	ND	ug/L	0.0095	0.0048	69	
WW-5-809	25-Jan-16	1601251416B	TAP 01-0408-031	607	4164-28-7	N-Nitrodimethylamine	ND	ug/L	0.0095	0.0048	102	
WW-5-809	25-Jan-16	1601251416B	TAP 01-0408-031	607	314-40-9	Bromacil	ND	ug/L	0.0095	0.0048	101	
WW-5-809	25-Jan-16	1601261011B	TAP 01-0403-015	NDMA_LL	62-75-9	N-Nitrosodimethylamine	0.43	ng/L	0.48	0.35		J
WW-5-809	25-Jan-16	1601261011B	TAP 01-0403-015	NDMA_LL	4164-28-7	N-Nitrodimethylamine	ND	ng/L	0.48	0.17		
WW-5-809	25-Jan-16	1601261330B	8270D	8270	120-58-1	Isosafrole	ND	ug/L	9.4	3.8		
WW-5-809	25-Jan-16	1601261330B	8270D	8270	91-80-5	Methapyrilene	ND	ug/L	47	26		
WW-5-809	25-Jan-16	1601261330B	8270D	8270	66-27-3	Methyl Methanesulfonate	ND	ug/L	9.4	1.0		
WW-5-809	25-Jan-16	1601261330B	8270D	8270	298-00-0	Methyl Parathion	ND	ug/L	9.4	1.3		
WW-5-809	25-Jan-16	1601261330B	8270D	8270	621-64-7	N-Nitroso-N-Dipropylamine	ND	ug/L	9.4	1.3		
WW-5-809	25-Jan-16	1601261330B	8270D	8270	55-18-5	N-Nitrosodiethylamine	ND	ug/L	9.4	1.0		
WW-5-809	25-Jan-16	1601261330B	8270D	8270	62-75-9	N-Nitrosodimethylamine	ND	ug/L	9.4	1.0		
WW-5-809	25-Jan-16	1601261330B	8270D	8270	86-30-6	N-Nitrosodiphenylamine	ND	ug/L	9.4	1.0		
WW-5-809	25-Jan-16	1601261330B	8270D	8270	10595-95-6	N-Nitrosomethylethylamine	ND	ug/L	9.4	1.8		
WW-5-809	25-Jan-16	1601261330B	8270D	8270	59-89-2	N-Nitrosomorpholine	ND	ug/L	9.4	1.2		
WW-5-809	25-Jan-16	1601261330B	8270D	8270	100-75-4	N-Nitrosopiperidine	ND	ug/L	9.4	1.1		
WW-5-809	25-Jan-16	1601261330B	8270D	8270	930-55-2	N-Nitrosopyrrolidine	ND	ug/L	9.4	1.0		
WW-5-809	25-Jan-16	1601261330B	8270D	8270	91-20-3	Naphthalene	ND	ug/L	9.4	1.0		
WW-5-809	25-Jan-16	1601261330B	8270D	8270	98-95-3	Nitrobenzene	ND	ug/L	9.4	1.6		
WW-5-809	25-Jan-16	1601261330B	8270D	8270	126-68-1	O,O,O-Triethyl Phosphorothioate	ND	ug/L	9.4	2.0		
WW-5-809	25-Jan-16	1601261330B	8270D	8270	56-38-2	Parathion	ND	ug/L	9.4	1.7		
WW-5-809	25-Jan-16	1601261330B	8270D	8270	608-93-5	Pentachlorobenzene	ND	ug/L	9.4	1.0		
WW-5-809	25-Jan-16	1601261330B	8270D	8270	76-01-7	Pentachloroethane	ND	ug/L	9.4	1.7		
WW-5-809	25-Jan-16	1601261330B	8270D	8270	82-68-8	Pentachloronitrobenzene (PCNB)	ND	ug/L	9.4	1.5		
WW-5-809	25-Jan-16	1601261330B	8270D	8270	62-44-2	Phenacetin	ND	ug/L	9.4	1.8		

WW-5-809	25-Jan-16	1601261330B	8270D	8270	85-01-8	Phenanthrene	ND	ug/L	9.4	1.0		
WW-5-809	25-Jan-16	1601261330B	8270D	8270	108-95-2	Phenol	ND	ug/L	9.4	1.0		
WW-5-809	25-Jan-16	1601261330B	8270D	8270	298-02-2	Phorate	ND	ug/L	9.4	1.0		
WW-5-809	25-Jan-16	1601261330B	8270D	8270	23950-58-5	Pronamide	ND	ug/L	9.4	1.3		
WW-5-809	25-Jan-16	1601261330B	8270D	8270	129-00-0	Pyrene	ND	ug/L	9.4	1.0		
WW-5-809	25-Jan-16	1601261330B	8270D	8270	110-86-1	Pyridine	ND	ug/L	47	16		
WW-5-809	25-Jan-16	1601261330B	8270D	8270	94-59-7	Safrole	ND	ug/L	9.4	1.1		
WW-5-809	25-Jan-16	1601261330B	8270D	8270	3689-24-5	Sulfotep	ND	ug/L	9.4	2.0		
WW-5-809	25-Jan-16	1601261330B	8270D	8270	297-97-2	Thionazin	ND	ug/L	9.4	1.8		
WW-5-809	25-Jan-16	1601261330B	8270D	8270	122-09-8	a,a-Dimethylphenethylamine	ND	ug/L	47	4.3		
WW-5-809	25-Jan-16	1601261330B	8270D	8270	95-53-4	o-Toluidine	ND	ug/L	9.4	2.1		
WW-5-809	25-Jan-16	1601261330B	8270D	8270	60-11-7	p-Dimethylaminoazobenzene	ND	ug/L	9.4	1.0		
WW-5-809	25-Jan-16	1601261330B	8270D	8270	TIC	Unknown	5.8	ug/L	NA	NA		TIC
WW-5-809	25-Jan-16	1601261330B	8270D	8270	TIC	Unknown	6.7	ug/L	NA	NA		TIC
WW-5-809	25-Jan-16	1601261330B	8270D	8270	015176-21-3	1,4-Dioxane, 2,5-dimethyl-	23	ug/L	NA	NA		TIC
WW-5-809	25-Jan-16	1601261330B	8270D	8270	TIC	Unknown	13	ug/L	NA	NA		TIC
WW-5-809	25-Jan-16	1601261330B	8270D	8270	003622-84-2	Benzenesulfonamide, N-butyl-	15	ug/L	NA	NA		TIC
WW-5-809	25-Jan-16	1601261330B	8270D	8270	95-94-3	1,2,4,5-Tetrachlorobenzene	ND	ug/L	9.4	1.9		
WW-5-809	25-Jan-16	1601261330B	8270D	8270	120-82-1	1,2,4-Trichlorobenzene	ND	ug/L	9.4	1.0		
WW-5-809	25-Jan-16	1601261330B	8270D	8270	95-50-1	1,2-Dichlorobenzene	ND	ug/L	9.4	1.0		
WW-5-809	25-Jan-16	1601261330B	8270D	8270	122-66-7	1,2-Diphenylhydrazine	ND	ug/L	9.4	1.0		
WW-5-809	25-Jan-16	1601261330B	8270D	8270	99-35-4	1,3,5-Trinitrobenzene	ND	ug/L	9.4	2.5		
WW-5-809	25-Jan-16	1601261330B	8270D	8270	541-73-1	1,3-Dichlorobenzene	ND	ug/L	9.4	1.0		
WW-5-809	25-Jan-16	1601261330B	8270D	8270	99-65-0	1,3-Dinitrobenzene	ND	ug/L	9.4	3.8		
WW-5-809	25-Jan-16	1601261330B	8270D	8270	106-46-7	1,4-Dichlorobenzene	ND	ug/L	9.4	1.0		
WW-5-809	25-Jan-16	1601261330B	8270D	8270	130-15-4	1,4-Naphthoquinone	ND	ug/L	47	2.9		
WW-5-809	25-Jan-16	1601261330B	8270D	8270	106-50-3	1,4-Phenylenediamine	ND	ug/L	47	NA		*
WW-5-809	25-Jan-16	1601261330B	8270D	8270	90-12-0	1-Methylnaphthalene	ND	ug/L	9.4	1.4		
WW-5-809	25-Jan-16	1601261330B	8270D	8270	134-32-7	1-Naphthylamine	ND	ug/L	47	9.2		
WW-5-809	25-Jan-16	1601261330B	8270D	8270	58-90-2	2,3,4,6-Tetrachlorophenol	ND	ug/L	9.4	2.0		
WW-5-809	25-Jan-16	1601261330B	8270D	8270	95-95-4	2,4,5-Trichlorophenol	ND	ug/L	9.4	1.8		
WW-5-809	25-Jan-16	1601261330B	8270D	8270	88-06-2	2,4,6-Trichlorophenol	ND	ug/L	9.4	1.4		
WW-5-809	25-Jan-16	1601261330B	8270D	8270	120-83-2	2,4-Dichlorophenol	ND	ug/L	9.4	1.3		
WW-5-809	25-Jan-16	1601261330B	8270D	8270	105-67-9	2,4-Dimethylphenol	ND	ug/L	9.4	1.5		
WW-5-809	25-Jan-16	1601261330B	8270D	8270	51-28-5	2,4-Dinitrophenol	ND	ug/L	47	20		
WW-5-809	25-Jan-16	1601261330B	8270D	8270	121-14-2	2,4-Dinitrotoluene	ND	ug/L	9.4	1.6		
WW-5-809	25-Jan-16	1601261330B	8270D	8270	87-65-0	2,6-Dichlorophenol	ND	ug/L	9.4	1.0		
WW-5-809	25-Jan-16	1601261330B	8270D	8270	606-20-2	2,6-Dinitrotoluene	ND	ug/L	9.4	1.8		
WW-5-809	25-Jan-16	1601261330B	8270D	8270	53-96-3	2-Acetylaminofluorene	ND	ug/L	9.4	1.0		
WW-5-809	25-Jan-16	1601261330B	8270D	8270	91-58-7	2-Chloronaphthalene	ND	ug/L	9.4	1.0		
WW-5-809	25-Jan-16	1601261330B	8270D	8270	95-57-8	2-Chlorophenol	ND	ug/L	9.4	1.0		

WW-5-809	25-Jan-16	1601261330B	8270D	8270	99-55-8	2-Methyl-5-nitroaniline (5-Nitro-o-toluidine)	ND	ug/L	9.4	1.8		
WW-5-809	25-Jan-16	1601261330B	8270D	8270	91-57-6	2-Methylnaphthalene	ND	ug/L	9.4	1.0		
WW-5-809	25-Jan-16	1601261330B	8270D	8270	95-48-7	2-Methylphenol	ND	ug/L	9.4	1.0		
WW-5-809	25-Jan-16	1601261330B	8270D	8270	91-59-8	2-Naphthylamine	ND	ug/L	47	5.1		
WW-5-809	25-Jan-16	1601261330B	8270D	8270	88-74-4	2-Nitroaniline	ND	ug/L	47	9.1		
WW-5-809	25-Jan-16	1601261330B	8270D	8270	88-75-5	2-Nitrophenol	ND	ug/L	9.4	1.4		
WW-5-809	25-Jan-16	1601261330B	8270D	8270	109-06-8	2-Picoline	ND	ug/L	9.4	1.8		
WW-5-809	25-Jan-16	1601261330B	8270D	8270	91-94-1	3,3'-Dichlorobenzidine	ND	ug/L	9.4	4.5		
WW-5-809	25-Jan-16	1601261330B	8270D	8270	119-93-7	3,3'-Dimethylbenzidine	ND	ug/L	47	19		
WW-5-809	25-Jan-16	1601261330B	8270D	8270	15831-10-4	3- and 4-Methylphenol Coelution	ND	ug/L	9.4	2.0		
WW-5-809	25-Jan-16	1601261330B	8270D	8270	56-49-5	3-Methylcholanthrene	ND	ug/L	9.4	1.0		
WW-5-809	25-Jan-16	1601261330B	8270D	8270	99-09-2	3-Nitroaniline	ND	ug/L	47	7.7		
WW-5-809	25-Jan-16	1601261330B	8270D	8270	534-52-1	4,6-Dinitro-2-methylphenol	ND	ug/L	47	11		
WW-5-809	25-Jan-16	1601261330B	8270D	8270	92-67-1	4-Aminobiphenyl	ND	ug/L	47	6.9		
WW-5-809	25-Jan-16	1601261330B	8270D	8270	101-55-3	4-Bromophenyl Phenyl Ether	ND	ug/L	9.4	2.2		
WW-5-809	25-Jan-16	1601261330B	8270D	8270	59-50-7	4-Chloro-3-methylphenol	ND	ug/L	9.4	1.2		
WW-5-809	25-Jan-16	1601261330B	8270D	8270	106-47-8	p-Chloroaniline	ND	ug/L	9.4	1.5		
WW-5-809	25-Jan-16	1601261330B	8270D	8270	7005-72-3	4-Chlorophenyl Phenyl Ether	ND	ug/L	9.4	1.2		
WW-5-809	25-Jan-16	1601261330B	8270D	8270	100-01-6	4-Nitroaniline	ND	ug/L	47	7.8		
WW-5-809	25-Jan-16	1601261330B	8270D	8270	100-02-7	4-Nitrophenol	ND	ug/L	47	5.9		
WW-5-809	25-Jan-16	1601261330B	8270D	8270	56-57-5	4-Nitroquinoline N-Oxide	ND	ug/L	47	11		
WW-5-809	25-Jan-16	1601261330B	8270D	8270	57-97-6	7,12-Dimethylbenz(a)anthracene	ND	ug/L	9.4	1.0		
WW-5-809	25-Jan-16	1601261330B	8270D	8270	83-32-9	Acenaphthene	ND	ug/L	9.4	1.0		
WW-5-809	25-Jan-16	1601261330B	8270D	8270	208-96-8	Acenaphthylene	ND	ug/L	9.4	1.0		
WW-5-809	25-Jan-16	1601261330B	8270D	8270	98-86-2	Acetophenone	ND	ug/L	9.4	1.6		
WW-5-809	25-Jan-16	1601261330B	8270D	8270	62-53-3	Aniline	ND	ug/L	9.4	2.0		
WW-5-809	25-Jan-16	1601261330B	8270D	8270	120-12-7	Anthracene	ND	ug/L	9.4	1.0		
WW-5-809	25-Jan-16	1601261330B	8270D	8270	140-57-8	Aramite, Total	ND	ug/L	47	9.5		
WW-5-809	25-Jan-16	1601261330B	8270D	8270	92-87-5	Benzidine	ND	ug/L	94	90		
WW-5-809	25-Jan-16	1601261330B	8270D	8270	191-24-2	Benzo(g,h,i)perylene	ND	ug/L	9.4	1.0		
WW-5-809	25-Jan-16	1601261330B	8270D	8270	100-51-6	Benzyl Alcohol	ND	ug/L	9.4	1.3		
WW-5-809	25-Jan-16	1601261330B	8270D	8270	108-60-1	Bis(1-chloroisopropyl) Ether	ND	ug/L	9.4	1.0		
WW-5-809	25-Jan-16	1601261330B	8270D	8270	111-91-1	Bis(2-chloroethoxy)methane	ND	ug/L	9.4	2.2		
WW-5-809	25-Jan-16	1601261330B	8270D	8270	111-44-4	Bis(2-chloroethyl) Ether	ND	ug/L	9.4	1.3		
WW-5-809	25-Jan-16	1601261330B	8270D	8270	85-68-7	Butyl Benzyl Phthalate	ND	ug/L	9.4	2.4		
WW-5-809	25-Jan-16	1601261330B	8270D	8270	510-15-6	Chlorobenzilate	ND	ug/L	9.4	1.0		

WW-5-809	25-Jan-16	1601261330B	8270D	8270	84-74-2	Di-n-butyl Phthalate	ND	ug/L	9.4	1.0		
WW-5-809	25-Jan-16	1601261330B	8270D	8270	117-84-0	Di-n-octyl Phthalate	ND	ug/L	9.4	1.2		
WW-5-809	25-Jan-16	1601261330B	8270D	8270	2303-16-4	Diallate	ND	ug/L	9.4	1.3		
WW-5-809	25-Jan-16	1601261330B	8270D	8270	132-64-9	Dibenzofuran	ND	ug/L	9.4	1.0		
WW-5-809	25-Jan-16	1601261330B	8270D	8270	84-66-2	Diethyl Phthalate	ND	ug/L	9.4	1.0		
WW-5-809	25-Jan-16	1601261330B	8270D	8270	60-51-5	Dimethoate	ND	ug/L	47	8.7		
WW-5-809	25-Jan-16	1601261330B	8270D	8270	131-11-3	Dimethyl Phthalate	ND	ug/L	9.4	1.0		
WW-5-809	25-Jan-16	1601261330B	8270D	8270	122-39-4	Diphenylamine	ND	ug/L	9.4	NA		*
WW-5-809	25-Jan-16	1601261330B	8270D	8270	298-04-4	Disulfoton	ND	ug/L	9.4	1.2		
WW-5-809	25-Jan-16	1601261330B	8270D	8270	62-50-0	Ethyl Methanesulfonate	ND	ug/L	9.4	1.0		
WW-5-809	25-Jan-16	1601261330B	8270D	8270	206-44-0	Fluoranthene	ND	ug/L	9.4	1.0		
WW-5-809	25-Jan-16	1601261330B	8270D	8270	86-73-7	Fluorene	ND	ug/L	9.4	1.0		
WW-5-809	25-Jan-16	1601261330B	8270D	8270	87-68-3	Hexachlorobutadiene	ND	ug/L	9.4	1.3		
WW-5-809	25-Jan-16	1601261330B	8270D	8270	77-47-4	Hexachlorocyclopentadiene	ND	ug/L	9.4	1.0		
WW-5-809	25-Jan-16	1601261330B	8270D	8270	67-72-1	Hexachloroethane	ND	ug/L	9.4	1.2		
WW-5-809	25-Jan-16	1601261330B	8270D	8270	70-30-4	Hexachlorophene	ND	ug/L	470	55		
WW-5-809	25-Jan-16	1601261330B	8270D	8270	1888-71-7	Hexachloropropene	ND	ug/L	9.4	1.0		
WW-5-809	25-Jan-16	1601261330B	8270D	8270	465-73-6	Isodrin	ND	ug/L	9.4	1.8		
WW-5-809	25-Jan-16	1601261330B	8270D	8270	78-59-1	Isophorone	ND	ug/L	9.4	1.0		
WW-5-809	25-Jan-16	1601261330B	8270D	8270	208-96-8	Acenaphthylene	ND	ug/L	0.19	0.050		
WW-5-809	25-Jan-16	1601261330B	8270D	8270	56-55-3	Benz(a)anthracene	ND	ug/L	0.19	0.050		
WW-5-809	25-Jan-16	1601261330B	8270D	8270	50-32-8	Benzo(a)pyrene	ND	ug/L	0.19	0.050		
WW-5-809	25-Jan-16	1601261330B	8270D	8270	205-99-2	Benzo(b)fluoranthene	ND	ug/L	0.19	0.050		
WW-5-809	25-Jan-16	1601261330B	8270D	8270	207-08-9	Benzo(k)fluoranthene	ND	ug/L	0.19	0.050		
WW-5-809	25-Jan-16	1601261330B	8270D	8270	117-81-7	Bis(2-ethylhexyl) Phthalate	ND	ug/L	4.7	0.57		
WW-5-809	25-Jan-16	1601261330B	8270D	8270	218-01-9	Chrysene	ND	ug/L	0.19	0.050		
WW-5-809	25-Jan-16	1601261330B	8270D	8270	53-70-3	Dibenz(a,h)anthracene	ND	ug/L	0.19	0.050		
WW-5-809	25-Jan-16	1601261330B	8270D	8270	118-74-1	Hexachlorobenzene	ND	ug/L	0.19	0.050		
WW-5-809	25-Jan-16	1601261330B	8270D	8270	193-39-5	Indeno(1,2,3-cd)pyrene	ND	ug/L	0.19	0.050		
WW-5-809	25-Jan-16	1601261331B	6010C	METALS	7429-90-5	Aluminum, Total	ND	mg/L	0.10	0.010		
WW-5-809	25-Jan-16	1601261331B	6020A	METALS	7440-36-0	Antimony, Total	ND	mg/L	0.0010	0.0004		
WW-5-809	25-Jan-16	1601261331B	6020A	METALS	7440-38-2	Arsenic, Total	0.0022	mg/L	0.0010	0.0004		
WW-5-809	25-Jan-16	1601261331B	6010C	METALS	7440-39-3	Barium, Total	0.018	mg/L	0.020	0.002		J
WW-5-809	25-Jan-16	1601261331B	6010C	METALS	7440-41-7	Beryllium, Total	ND	mg/L	0.0030	0.0002		
WW-5-809	25-Jan-16	1601261331B	6010C	METALS	7440-42-8	Boron, Total	0.2	mg/L	0.20	0.02		
WW-5-809	25-Jan-16	1601261331B	6010C	METALS	7440-43-9	Cadmium, Total	ND	mg/L	0.0050	0.0002		
WW-5-809	25-Jan-16	1601261331B	6010C	METALS	7440-70-2	Calcium, Total	58.8	mg/L	1.0	0.2		
WW-5-809	25-Jan-16	1601261331B	6010C	METALS	7440-47-3	Chromium, Total	0.004	mg/L	0.010	0.0003		J
WW-5-809	25-Jan-16	1601261331B	6010C	METALS	7440-48-4	Cobalt, Total	ND	mg/L	0.050	0.002		
WW-5-809	25-Jan-16	1601261331B	6010C	METALS	7440-50-8	Copper, Total	ND	mg/L	0.020	0.003		
WW-5-809	25-Jan-16	1601261331B	6010C	METALS	7439-89-6	Iron, Total	ND	mg/L	0.10	0.009		
WW-5-809	25-Jan-16	1601261331B	6010C	METALS	7439-92-1	Lead, Total	ND	mg/L	0.050	0.005		
WW-5-809	25-Jan-16	1601261331B	6010C	METALS	7439-95-4	Magnesium, Total	32.5	mg/L	1.0	0.010		

WW-5-809	25-Jan-16	1601261331B	6010C	METALS	7439-96-5	Manganese, Total	ND	mg/L	0.010	0.0010		
WW-5-809	25-Jan-16	1601261331B	7470A	METALS	7439-97-6	Mercury, Total	ND	mg/L	0.00020	0.00004		
WW-5-809	25-Jan-16	1601261331B	6010C	METALS	7439-98-7	Molybdenum, Total	0.009	mg/L	0.025	0.002		J
WW-5-809	25-Jan-16	1601261331B	6010C	METALS	7440-02-0	Nickel, Total	0.006	mg/L	0.040	0.002		J
WW-5-809	25-Jan-16	1601261331B	6010C	METALS	7440-09-7	Potassium, Total	3.5	mg/L	2.0	0.05		
WW-5-809	25-Jan-16	1601261331B	6010C	METALS	7782-49-2	Selenium, Total	ND	mg/L	0.010	0.005		
WW-5-809	25-Jan-16	1601261331B	6010C	METALS	7440-22-4	Silver, Total	ND	mg/L	0.010	0.0006		
WW-5-809	25-Jan-16	1601261331B	6010C	METALS	7440-23-5	Sodium, Total	95.5	mg/L	1.0	0.09		
WW-5-809	25-Jan-16	1601261331B	6010C	METALS	7440-24-6	Strontium, Total	1.99	mg/L	0.10	0.002		
WW-5-809	25-Jan-16	1601261331B	6020A	METALS	7440-28-0	Thallium, Total	ND	mg/L	0.0010	0.00003		
WW-5-809	25-Jan-16	1601261331B	6010C	METALS	7440-31-5	Tin, Total	ND	mg/L	0.50	0.02		
WW-5-809	25-Jan-16	1601261331B	6010C	METALS	7440-62-2	Vanadium, Total	0.014	mg/L	0.050	0.0010		J
WW-5-809	25-Jan-16	1601261331B	6010C	METALS	7440-66-6	Zinc, Total	0.033	mg/L	0.020	0.007		
WW-5-809	25-Jan-16	1601261400B	SM 2320 B-1997(20	ANIONS	NA	Alkalinity, Total as CaCO3	139	mg/L	2.0	0.3		
WW-5-809	25-Jan-16	1601261400B	300.0	ANIONS	16887-00-6	Chloride	41.6	mg/L	2.0	1.0		
WW-5-809	25-Jan-16	1601261400B	300.0	ANIONS	16984-48-8	Fluoride, undistilled	0.66	mg/L	0.10	0.008		
WW-5-809	25-Jan-16	1601261400B	300.0	ANIONS	14808-79-8	Sulfate	292	mg/L	10	1		
WW-5-809	25-Jan-16	1601261401B	SM 2540 C-1997(20	SM2540C	NA	Total Dissolved Solids (TDS)	639	mg/L	10	4		
WW-5-809	25-Jan-16	1601261402B	6850	6850	14797-73-0	Perchlorate	0.41	ug/L	0.20	0.026		
WW-5-809	25-Jan-16	1601261403B	353.2	353.2	NA	Nitrate+Nitrite as Nitrogen	1.8	mg/L	0.050	0.003		
WW-5-809	25-Jan-16	1601261445B	PARAMS	PARAMS	NA	pH	7.68	NA	NA	NA		
WW-5-809	25-Jan-16	1601261445B	PARAMS	PARAMS	NA	Temperature	19.1	ºC	NA	NA		
WW-5-809	25-Jan-16	1601261445B	PARAMS	PARAMS	NA	Conductivity	951	µS/cm	NA	NA		
WW-5-809	25-Jan-16	1601261445B	PARAMS	PARAMS	NA	Turbidity	1.09	NTU	NA	NA		
WW-5-809	25-Jan-16	1601261445B	PARAMS	PARAMS	NA	Transducer	NA	ft	NA	NA		
WW-5-909	25-Jan-16	1601251420B	PARAMS	PARAMS	NA	pH	7.87	NA	NA	NA		
WW-5-909	25-Jan-16	1601251420B	PARAMS	PARAMS	NA	Temperature	17.1	ºC	NA	NA		
WW-5-909	25-Jan-16	1601251420B	PARAMS	PARAMS	NA	Conductivity	1205	µS/cm	NA	NA		
WW-5-909	25-Jan-16	1601251420B	PARAMS	PARAMS	NA	Turbidity	0.72	NTU	NA	NA		
WW-5-909	25-Jan-16	1601251435B	8260C	8260_LL	630-20-6	1,1,1,2-Tetrachloroethane	ND	ug/L	0.50	0.20		
WW-5-909	25-Jan-16	1601251435B	8260C	8260_LL	71-55-6	1,1,1-Trichloroethane (TCA)	ND	ug/L	0.50	0.36		
WW-5-909	25-Jan-16	1601251435B	8260C	8260_LL	79-34-5	1,1,2,2-Tetrachloroethane	ND	ug/L	0.50	0.20		
WW-5-909	25-Jan-16	1601251435B	8260C	8260_LL	79-00-5	1,1,2-Trichloroethane	ND	ug/L	0.50	0.23		
WW-5-909	25-Jan-16	1601251435B	8260C	8260_LL	76-13-1	1,1,2-Trichloro-1,2,2-Trifluoroethane	ND	ug/L	0.50	0.31		
WW-5-909	25-Jan-16	1601251435B	8260C	8260_LL	75-34-3	1,1-Dichloroethane (1,1-DCA)	ND	ug/L	0.50	0.20		
WW-5-909	25-Jan-16	1601251435B	8260C	8260_LL	75-35-4	1,1-Dichloroethene	ND	ug/L	0.50	0.28		
WW-5-909	25-Jan-16	1601251435B	8260C	8260_LL	96-18-4	1,2,3-Trichloropropane	ND	ug/L	0.50	0.32		

WW-5-909	25-Jan-16	1601251435B	8260C	8260_LL	96-12-8	1,2-Dibromo-3-chloropropane (DBCP)	ND	ug/L	1.0	0.74		
WW-5-909	25-Jan-16	1601251435B	8260C	8260_LL	106-93-4	1,2-Dibromoethane	ND	ug/L	0.50	0.24		
WW-5-909	25-Jan-16	1601251435B	8260C	8260_LL	107-06-2	1,2-Dichloroethane	ND	ug/L	0.50	0.20		
WW-5-909	25-Jan-16	1601251435B	8260C	8260_LL	78-87-5	1,2-Dichloropropane	ND	ug/L	0.50	0.20		
WW-5-909	25-Jan-16	1601251435B	8260C	8260_LL	123-91-1	1,4-Dioxane	ND	ug/L	40	18		
WW-5-909	25-Jan-16	1601251435B	8260C	8260_LL	306-83-2	2,2-Dichloro-1,1,1-trifluoroethane (CFC 123)	ND	ug/L	0.50	0.32		
WW-5-909	25-Jan-16	1601251435B	8260C	8260_LL	78-93-3	2-Butanone (MEK)	ND	ug/L	5.0	0.81		
WW-5-909	25-Jan-16	1601251435B	8260C	8260_LL	126-99-8	2-Chloro-1,3-butadiene	ND	ug/L	0.50	0.22		
WW-5-909	25-Jan-16	1601251435B	8260C	8260_LL	591-78-6	2-Hexanone	ND	ug/L	5.0	0.73		
WW-5-909	25-Jan-16	1601251435B	8260C	8260_LL	78-83-1	2-Methyl-1-propanol (Isobutyl Alcohol)	ND	ug/L	100	8.1		
WW-5-909	25-Jan-16	1601251435B	8260C	8260_LL	67-63-0	2-Propanol	ND	ug/L	40	8.6		
WW-5-909	25-Jan-16	1601251435B	8260C	8260_LL	107-05-1	3-Chloro-1-propene (Allyl Chloride)	ND	ug/L	3.0	0.25		
WW-5-909	25-Jan-16	1601251435B	8260C	8260_LL	108-10-1	4-Methyl-2-pentanone	ND	ug/L	2.0	0.20		
WW-5-909	25-Jan-16	1601251435B	8260C	8260_LL	67-64-1	Acetone	4.6	ug/L	5.0	1.3		J
WW-5-909	25-Jan-16	1601251435B	8260C	8260_LL	75-05-8	Acetonitrile	ND	ug/L	25	3.7		
WW-5-909	25-Jan-16	1601251435B	8260C	8260_LL	107-02-8	Acrolein	ND	ug/L	5.0	3.0		
WW-5-909	25-Jan-16	1601251435B	8260C	8260_LL	107-13-1	Acrylonitrile	ND	ug/L	2.5	0.78		
WW-5-909	25-Jan-16	1601251435B	8260C	8260_LL	71-43-2	Benzene	ND	ug/L	0.50	0.20		
WW-5-909	25-Jan-16	1601251435B	8260C	8260_LL	75-27-4	Bromodichloromethane	ND	ug/L	0.50	0.32		
WW-5-909	25-Jan-16	1601251435B	8260C	8260_LL	75-25-2	Bromoform	ND	ug/L	1.0	0.21		
WW-5-909	25-Jan-16	1601251435B	8260C	8260_LL	74-83-9	Bromomethane	ND	ug/L	0.50	0.24		
WW-5-909	25-Jan-16	1601251435B	8260C	8260_LL	75-15-0	Carbon Disulfide	ND	ug/L	0.50	0.20		
WW-5-909	25-Jan-16	1601251435B	8260C	8260_LL	56-23-5	Carbon Tetrachloride	ND	ug/L	0.50	0.45		
WW-5-909	25-Jan-16	1601251435B	8260C	8260_LL	108-90-7	Chlorobenzene	ND	ug/L	0.50	0.20		
WW-5-909	25-Jan-16	1601251435B	8260C	8260_LL	75-00-3	Chloroethane	ND	ug/L	0.50	0.22		
WW-5-909	25-Jan-16	1601251435B	8260C	8260_LL	67-66-3	Chloroform	ND	ug/L	0.50	0.20		
WW-5-909	25-Jan-16	1601251435B	8260C	8260_LL	74-87-3	Chloromethane	ND	ug/L	0.50	0.20		
WW-5-909	25-Jan-16	1601251435B	8260C	8260_LL	110-82-7	Cyclohexane	ND	ug/L	1.0	0.25		
WW-5-909	25-Jan-16	1601251435B	8260C	8260_LL	124-48-1	Dibromochloromethane	ND	ug/L	0.50	0.20		
WW-5-909	25-Jan-16	1601251435B	8260C	8260_LL	74-95-3	Dibromomethane	ND	ug/L	0.50	0.22		
WW-5-909	25-Jan-16	1601251435B	8260C	8260_LL	75-71-8	Dichlorodifluoromethane (CFC 12)	ND	ug/L	0.50	0.21		
WW-5-909	25-Jan-16	1601251435B	8260C	8260_LL	75-43-4	Dichlorofluoromethane (CFC 21)	ND	ug/L	0.50	0.20		
WW-5-909	25-Jan-16	1601251435B	8260C	8260_LL	75-09-2	Dichloromethane	ND	ug/L	0.50	0.20		
WW-5-909	25-Jan-16	1601251435B	8260C	8260_LL	97-63-2	Ethyl Methacrylate	ND	ug/L	0.50	0.20		
WW-5-909	25-Jan-16	1601251435B	8260C	8260_LL	100-41-4	Ethylbenzene	ND	ug/L	0.50	0.20		
WW-5-909	25-Jan-16	1601251435B	8260C	8260_LL	74-88-4	Iodomethane	ND	ug/L	5.0	0.27		
WW-5-909	25-Jan-16	1601251435B	8260C	8260_LL	126-98-7	Methacrylonitrile	ND	ug/L	1.0	0.50		
WW-5-909	25-Jan-16	1601251435B	8260C	8260_LL	80-62-6	Methyl Methacrylate	ND	ug/L	0.50	0.39		
WW-5-909	25-Jan-16	1601251435B	8260C	8260_LL	1634-04-4	Methyl tert-Butyl Ether	ND	ug/L	0.50	0.20		

WW-5-909	25-Jan-16	1601251435B	8260C	8260_LL	108-87-2	Methylcyclohexane	ND	ug/L	1.0	0.27		
WW-5-909	25-Jan-16	1601251435B	8260C	8260_LL	107-12-0	Propionitrile	ND	ug/L	2.5	1.7		
WW-5-909	25-Jan-16	1601251435B	8260C	8260_LL	100-42-5	Styrene	ND	ug/L	0.50	0.20		
WW-5-909	25-Jan-16	1601251435B	8260C	8260_LL	127-18-4	Tetrachloroethene (PCE)	ND	ug/L	0.50	0.20		
WW-5-909	25-Jan-16	1601251435B	8260C	8260_LL	109-99-9	Tetrahydrofuran (THF)	ND	ug/L	5.0	0.66		
WW-5-909	25-Jan-16	1601251435B	8260C	8260_LL	108-88-3	Toluene	1.2	ug/L	0.50	0.20		
WW-5-909	25-Jan-16	1601251435B	8260C	8260_LL	79-01-6	Trichloroethene (TCE)	ND	ug/L	0.50	0.20		
WW-5-909	25-Jan-16	1601251435B	8260C	8260_LL	75-69-4	Trichlorofluoromethane (CFC 11)	ND	ug/L	0.50	0.20		
WW-5-909	25-Jan-16	1601251435B	8260C	8260_LL	108-05-4	Vinyl Acetate	ND	ug/L	1.0	0.78		
WW-5-909	25-Jan-16	1601251435B	8260C	8260_LL	75-01-4	Vinyl Chloride	ND	ug/L	0.50	0.22		
WW-5-909	25-Jan-16	1601251435B	8260C	8260_LL	156-59-2	cis-1,2-Dichloroethene	ND	ug/L	0.50	0.20		
WW-5-909	25-Jan-16	1601251435B	8260C	8260_LL	10061-01-5	cis-1,3-Dichloropropene	ND	ug/L	0.50	0.20		
WW-5-909	25-Jan-16	1601251435B	8260C	8260_LL	179601-23-1	m,p-Xylenes	ND	ug/L	1.0	0.26		
WW-5-909	25-Jan-16	1601251435B	8260C	8260_LL	95-47-6	o-Xylene	ND	ug/L	0.50	0.20		
WW-5-909	25-Jan-16	1601251435B	8260C	8260_LL	156-60-5	trans-1,2-Dichloroethene	ND	ug/L	0.50	0.20		
WW-5-909	25-Jan-16	1601251435B	8260C	8260_LL	10061-02-6	trans-1,3-Dichloropropene	ND	ug/L	0.50	0.20		
WW-5-909	25-Jan-16	1601251435B	8260C	8260_LL	110-57-6	trans-1,4-Dichloro-2-butene	ND	ug/L	0.52	0.52		
WW-5-909	25-Jan-16	1601251435B	8260C	8260_LL	354-23-4	1,2-Dichloro-1,1,2-trifluoroethane (CFC 123a)	ND	ug/L	0.50	0.20		
WW-5-909	25-Jan-16	1601251436B	TAP 01-0408-031	607	62-75-9	N-Nitrosodimethylamine	ND	ug/L	0.0095	0.0048	69	
WW-5-909	25-Jan-16	1601251436B	TAP 01-0408-031	607	4164-28-7	N-Nitrodimethylamine	ND	ug/L	0.0095	0.0048	102	
WW-5-909	25-Jan-16	1601251436B	TAP 01-0408-031	607	314-40-9	Bromacil	ND	ug/L	0.0095	0.0048	101	
WW-5-909	25-Jan-16	1601261025B	TAP 01-0403-015	NDMA_LL	62-75-9	N-Nitrosodimethylamine	1.2	ng/L	0.48	0.35		
WW-5-909	25-Jan-16	1601261025B	TAP 01-0403-015	NDMA_LL	4164-28-7	N-Nitrodimethylamine	0.22	ng/L	0.48	0.17		J
WW-5-909	25-Jan-16	1601261335B	8270D	8270	95-94-3	1,2,4,5-Tetrachlorobenzene	ND	ug/L	9.4	1.9		
WW-5-909	25-Jan-16	1601261335B	8270D	8270	120-82-1	1,2,4-Trichlorobenzene	ND	ug/L	9.4	1.0		
WW-5-909	25-Jan-16	1601261335B	8270D	8270	95-50-1	1,2-Dichlorobenzene	ND	ug/L	9.4	1.0		
WW-5-909	25-Jan-16	1601261335B	8270D	8270	122-66-7	1,2-Diphenylhydrazine	ND	ug/L	9.4	1.0		
WW-5-909	25-Jan-16	1601261335B	8270D	8270	99-35-4	1,3,5-Trinitrobenzene	ND	ug/L	9.4	2.5		
WW-5-909	25-Jan-16	1601261335B	8270D	8270	541-73-1	1,3-Dichlorobenzene	ND	ug/L	9.4	1.0		
WW-5-909	25-Jan-16	1601261335B	8270D	8270	99-65-0	1,3-Dinitrobenzene	ND	ug/L	9.4	3.8		
WW-5-909	25-Jan-16	1601261335B	8270D	8270	106-46-7	1,4-Dichlorobenzene	ND	ug/L	9.4	1.0		
WW-5-909	25-Jan-16	1601261335B	8270D	8270	130-15-4	1,4-Naphthoquinone	ND	ug/L	47	2.9		
WW-5-909	25-Jan-16	1601261335B	8270D	8270	106-50-3	1,4-Phenylenediamine	ND	ug/L	47	NA		*
WW-5-909	25-Jan-16	1601261335B	8270D	8270	90-12-0	1-Methylnaphthalene	ND	ug/L	9.4	1.4		
WW-5-909	25-Jan-16	1601261335B	8270D	8270	134-32-7	1-Naphthylamine	ND	ug/L	47	9.2		
WW-5-909	25-Jan-16	1601261335B	8270D	8270	58-90-2	2,3,4,6-Tetrachlorophenol	ND	ug/L	9.4	2.0		

WW-5-909	25-Jan-16	1601261335B	8270D	8270	95-95-4	2,4,5-Trichlorophenol	ND	ug/L	9.4	1.8		
WW-5-909	25-Jan-16	1601261335B	8270D	8270	88-06-2	2,4,6-Trichlorophenol	ND	ug/L	9.4	1.4		
WW-5-909	25-Jan-16	1601261335B	8270D	8270	120-83-2	2,4-Dichlorophenol	ND	ug/L	9.4	1.3		
WW-5-909	25-Jan-16	1601261335B	8270D	8270	105-67-9	2,4-Dimethylphenol	ND	ug/L	9.4	1.5		
WW-5-909	25-Jan-16	1601261335B	8270D	8270	51-28-5	2,4-Dinitrophenol	ND	ug/L	47	20		
WW-5-909	25-Jan-16	1601261335B	8270D	8270	121-14-2	2,4-Dinitrotoluene	ND	ug/L	9.4	1.6		
WW-5-909	25-Jan-16	1601261335B	8270D	8270	87-65-0	2,6-Dichlorophenol	ND	ug/L	9.4	1.0		
WW-5-909	25-Jan-16	1601261335B	8270D	8270	606-20-2	2,6-Dinitrotoluene	ND	ug/L	9.4	1.8		
WW-5-909	25-Jan-16	1601261335B	8270D	8270	53-96-3	2-Acetylaminofluorene	ND	ug/L	9.4	1.0		
WW-5-909	25-Jan-16	1601261335B	8270D	8270	91-58-7	2-Chloronaphthalene	ND	ug/L	9.4	1.0		
WW-5-909	25-Jan-16	1601261335B	8270D	8270	95-57-8	2-Chlorophenol	ND	ug/L	9.4	1.0		
WW-5-909	25-Jan-16	1601261335B	8270D	8270	99-55-8	2-Methyl-5-nitroaniline (5-Nitro-o-toluidine)	ND	ug/L	9.4	1.8		
WW-5-909	25-Jan-16	1601261335B	8270D	8270	91-57-6	2-Methylnaphthalene	ND	ug/L	9.4	1.0		
WW-5-909	25-Jan-16	1601261335B	8270D	8270	95-48-7	2-Methylphenol	ND	ug/L	9.4	1.0		
WW-5-909	25-Jan-16	1601261335B	8270D	8270	91-59-8	2-Naphthylamine	ND	ug/L	47	5.1		
WW-5-909	25-Jan-16	1601261335B	8270D	8270	88-74-4	2-Nitroaniline	ND	ug/L	47	9.1		
WW-5-909	25-Jan-16	1601261335B	8270D	8270	88-75-5	2-Nitrophenol	ND	ug/L	9.4	1.4		
WW-5-909	25-Jan-16	1601261335B	8270D	8270	109-06-8	2-Picoline	ND	ug/L	9.4	1.8		
WW-5-909	25-Jan-16	1601261335B	8270D	8270	91-94-1	3,3'-Dichlorobenzidine	ND	ug/L	9.4	4.5		
WW-5-909	25-Jan-16	1601261335B	8270D	8270	119-93-7	3,3'-Dimethylbenzidine	ND	ug/L	47	19		
WW-5-909	25-Jan-16	1601261335B	8270D	8270	15831-10-4	3- and 4-Methylphenol Coelution	ND	ug/L	9.4	2.0		
WW-5-909	25-Jan-16	1601261335B	8270D	8270	56-49-5	3-Methylcholanthrene	ND	ug/L	9.4	1.0		
WW-5-909	25-Jan-16	1601261335B	8270D	8270	99-09-2	3-Nitroaniline	ND	ug/L	47	7.7		
WW-5-909	25-Jan-16	1601261335B	8270D	8270	534-52-1	4,6-Dinitro-2-methylphenol	ND	ug/L	47	11		
WW-5-909	25-Jan-16	1601261335B	8270D	8270	92-67-1	4-Aminobiphenyl	ND	ug/L	47	6.9		
WW-5-909	25-Jan-16	1601261335B	8270D	8270	101-55-3	4-Bromophenyl Phenyl Ether	ND	ug/L	9.4	2.2		
WW-5-909	25-Jan-16	1601261335B	8270D	8270	59-50-7	4-Chloro-3-methylphenol	ND	ug/L	9.4	1.2		
WW-5-909	25-Jan-16	1601261335B	8270D	8270	106-47-8	p-Chloroaniline	ND	ug/L	9.4	1.5		
WW-5-909	25-Jan-16	1601261335B	8270D	8270	7005-72-3	4-Chlorophenyl Phenyl Ether	ND	ug/L	9.4	1.2		
WW-5-909	25-Jan-16	1601261335B	8270D	8270	100-01-6	4-Nitroaniline	ND	ug/L	47	7.8		
WW-5-909	25-Jan-16	1601261335B	8270D	8270	100-02-7	4-Nitrophenol	ND	ug/L	47	5.9		
WW-5-909	25-Jan-16	1601261335B	8270D	8270	56-57-5	4-Nitroquinoline N-Oxide	ND	ug/L	47	11		
WW-5-909	25-Jan-16	1601261335B	8270D	8270	57-97-6	7,12-Dimethylbenz(a)anthracene	ND	ug/L	9.4	1.0		
WW-5-909	25-Jan-16	1601261335B	8270D	8270	83-32-9	Acenaphthene	ND	ug/L	9.4	1.0		
WW-5-909	25-Jan-16	1601261335B	8270D	8270	208-96-8	Acenaphthylene	ND	ug/L	9.4	1.0		
WW-5-909	25-Jan-16	1601261335B	8270D	8270	98-86-2	Acetophenone	ND	ug/L	9.4	1.6		
WW-5-909	25-Jan-16	1601261335B	8270D	8270	62-53-3	Aniline	ND	ug/L	9.4	2.0		
WW-5-909	25-Jan-16	1601261335B	8270D	8270	120-12-7	Anthracene	ND	ug/L	9.4	1.0		

WW-5-909	25-Jan-16	1601261335B	8270D	8270	140-57-8	Aramite, Total	ND	ug/L	47	9.5		
WW-5-909	25-Jan-16	1601261335B	8270D	8270	92-87-5	Benzidine	ND	ug/L	94	90		
WW-5-909	25-Jan-16	1601261335B	8270D	8270	191-24-2	Benzo(g,h,i)perylene	ND	ug/L	9.4	1.0		
WW-5-909	25-Jan-16	1601261335B	8270D	8270	100-51-6	Benzyl Alcohol	ND	ug/L	9.4	1.3		
WW-5-909	25-Jan-16	1601261335B	8270D	8270	108-60-1	Bis(1-chloroisopropyl) Ether	ND	ug/L	9.4	1.0		
WW-5-909	25-Jan-16	1601261335B	8270D	8270	111-91-1	Bis(2-chloroethoxy)methane	ND	ug/L	9.4	2.2		
WW-5-909	25-Jan-16	1601261335B	8270D	8270	111-44-4	Bis(2-chloroethyl) Ether	ND	ug/L	9.4	1.3		
WW-5-909	25-Jan-16	1601261335B	8270D	8270	85-68-7	Butyl Benzyl Phthalate	ND	ug/L	9.4	2.4		
WW-5-909	25-Jan-16	1601261335B	8270D	8270	510-15-6	Chlorobenzilate	ND	ug/L	9.4	1.0		
WW-5-909	25-Jan-16	1601261335B	8270D	8270	84-74-2	Di-n-butyl Phthalate	ND	ug/L	9.4	1.0		
WW-5-909	25-Jan-16	1601261335B	8270D	8270	117-84-0	Di-n-octyl Phthalate	ND	ug/L	9.4	1.2		
WW-5-909	25-Jan-16	1601261335B	8270D	8270	2303-16-4	Diallate	ND	ug/L	9.4	1.3		
WW-5-909	25-Jan-16	1601261335B	8270D	8270	132-64-9	Dibenzofuran	ND	ug/L	9.4	1.0		
WW-5-909	25-Jan-16	1601261335B	8270D	8270	84-66-2	Diethyl Phthalate	ND	ug/L	9.4	1.0		
WW-5-909	25-Jan-16	1601261335B	8270D	8270	60-51-5	Dimethoate	ND	ug/L	47	8.7		
WW-5-909	25-Jan-16	1601261335B	8270D	8270	131-11-3	Dimethyl Phthalate	ND	ug/L	9.4	1.0		
WW-5-909	25-Jan-16	1601261335B	8270D	8270	122-39-4	Diphenylamine	ND	ug/L	9.4	NA		*
WW-5-909	25-Jan-16	1601261335B	8270D	8270	298-04-4	Disulfoton	ND	ug/L	9.4	1.2		
WW-5-909	25-Jan-16	1601261335B	8270D	8270	62-50-0	Ethyl Methanesulfonate	ND	ug/L	9.4	1.0		
WW-5-909	25-Jan-16	1601261335B	8270D	8270	206-44-0	Fluoranthene	ND	ug/L	9.4	1.0		
WW-5-909	25-Jan-16	1601261335B	8270D	8270	86-73-7	Fluorene	ND	ug/L	9.4	1.0		
WW-5-909	25-Jan-16	1601261335B	8270D	8270	87-68-3	Hexachlorobutadiene	ND	ug/L	9.4	1.3		
WW-5-909	25-Jan-16	1601261335B	8270D	8270	77-47-4	Hexachlorocyclopentadiene	ND	ug/L	9.4	1.0		
WW-5-909	25-Jan-16	1601261335B	8270D	8270	67-72-1	Hexachloroethane	ND	ug/L	9.4	1.2		
WW-5-909	25-Jan-16	1601261335B	8270D	8270	70-30-4	Hexachlorophene	ND	ug/L	470	55		
WW-5-909	25-Jan-16	1601261335B	8270D	8270	1888-71-7	Hexachloropropene	ND	ug/L	9.4	1.0		
WW-5-909	25-Jan-16	1601261335B	8270D	8270	465-73-6	Isodrin	ND	ug/L	9.4	1.8		
WW-5-909	25-Jan-16	1601261335B	8270D	8270	78-59-1	Isophorone	ND	ug/L	9.4	1.0		
WW-5-909	25-Jan-16	1601261335B	8270D	8270	120-58-1	Isosafrole	ND	ug/L	9.4	3.8		
WW-5-909	25-Jan-16	1601261335B	8270D	8270	91-80-5	Methapyrilene	ND	ug/L	47	26		
WW-5-909	25-Jan-16	1601261335B	8270D	8270	66-27-3	Methyl Methanesulfonate	ND	ug/L	9.4	1.0		
WW-5-909	25-Jan-16	1601261335B	8270D	8270	298-00-0	Methyl Parathion	ND	ug/L	9.4	1.3		
WW-5-909	25-Jan-16	1601261335B	8270D	8270	621-64-7	N-Nitroso-N-Dipropylamine	ND	ug/L	9.4	1.3		
WW-5-909	25-Jan-16	1601261335B	8270D	8270	55-18-5	N-Nitrosodiethylamine	ND	ug/L	9.4	1.0		
WW-5-909	25-Jan-16	1601261335B	8270D	8270	62-75-9	N-Nitrosodimethylamine	ND	ug/L	9.4	1.0		
WW-5-909	25-Jan-16	1601261335B	8270D	8270	86-30-6	N-Nitrosodiphenylamine	ND	ug/L	9.4	1.0		
WW-5-909	25-Jan-16	1601261335B	8270D	8270	10595-95-6	N-Nitrosomethylethylamine	ND	ug/L	9.4	1.8		
WW-5-909	25-Jan-16	1601261335B	8270D	8270	59-89-2	N-Nitrosomorpholine	ND	ug/L	9.4	1.2		
WW-5-909	25-Jan-16	1601261335B	8270D	8270	100-75-4	N-Nitrosopiperidine	ND	ug/L	9.4	1.1		
WW-5-909	25-Jan-16	1601261335B	8270D	8270	930-55-2	N-Nitrosopyrrolidine	ND	ug/L	9.4	1.0		

WW-5-909	25-Jan-16	1601261335B	8270D	8270	91-20-3	Naphthalene	ND	ug/L	9.4	1.0		
WW-5-909	25-Jan-16	1601261335B	8270D	8270	98-95-3	Nitrobenzene	ND	ug/L	9.4	1.6		
WW-5-909	25-Jan-16	1601261335B	8270D	8270	126-68-1	O,O,O-Triethyl Phosphorothioate	ND	ug/L	9.4	2.0		
WW-5-909	25-Jan-16	1601261335B	8270D	8270	56-38-2	Parathion	ND	ug/L	9.4	1.7		
WW-5-909	25-Jan-16	1601261335B	8270D	8270	608-93-5	Pentachlorobenzene	ND	ug/L	9.4	1.0		
WW-5-909	25-Jan-16	1601261335B	8270D	8270	76-01-7	Pentachloroethane	ND	ug/L	9.4	1.7		
WW-5-909	25-Jan-16	1601261335B	8270D	8270	82-68-8	Pentachloronitrobenzene (PCNB)	ND	ug/L	9.4	1.5		
WW-5-909	25-Jan-16	1601261335B	8270D	8270	62-44-2	Phenacetin	ND	ug/L	9.4	1.8		
WW-5-909	25-Jan-16	1601261335B	8270D	8270	85-01-8	Phenanthrene	ND	ug/L	9.4	1.0		
WW-5-909	25-Jan-16	1601261335B	8270D	8270	108-95-2	Phenol	ND	ug/L	9.4	1.0		
WW-5-909	25-Jan-16	1601261335B	8270D	8270	298-02-2	Phorate	ND	ug/L	9.4	1.0		
WW-5-909	25-Jan-16	1601261335B	8270D	8270	23950-58-5	Pronamide	ND	ug/L	9.4	1.3		
WW-5-909	25-Jan-16	1601261335B	8270D	8270	129-00-0	Pyrene	ND	ug/L	9.4	1.0		
WW-5-909	25-Jan-16	1601261335B	8270D	8270	110-86-1	Pyridine	ND	ug/L	47	16		
WW-5-909	25-Jan-16	1601261335B	8270D	8270	94-59-7	Safrole	ND	ug/L	9.4	1.1		
WW-5-909	25-Jan-16	1601261335B	8270D	8270	3689-24-5	Sulfotep	ND	ug/L	9.4	2.0		
WW-5-909	25-Jan-16	1601261335B	8270D	8270	297-97-2	Thionazin	ND	ug/L	9.4	1.8		
WW-5-909	25-Jan-16	1601261335B	8270D	8270	122-09-8	a,a-Dimethylphenethylamine	ND	ug/L	47	4.3		
WW-5-909	25-Jan-16	1601261335B	8270D	8270	95-53-4	o-Toluidine	ND	ug/L	9.4	2.1		
WW-5-909	25-Jan-16	1601261335B	8270D	8270	60-11-7	p-Dimethylaminoazobenzene	ND	ug/L	9.4	1.0		
WW-5-909	25-Jan-16	1601261335B	8270D	8270	TIC	Unknown	4.8	ug/L	NA	NA		TIC
WW-5-909	25-Jan-16	1601261335B	8270D	8270	TIC	Unknown	4	ug/L	NA	NA		TIC
WW-5-909	25-Jan-16	1601261335B	8270D	8270	TIC	Unknown	5.6	ug/L	NA	NA		TIC
WW-5-909	25-Jan-16	1601261335B	8270D	8270	TIC	Unknown	5.2	ug/L	NA	NA		TIC
WW-5-909	25-Jan-16	1601261335B	8270D	8270	015176-21-3	1,4-Dioxane, 2,5-dimethyl-	18	ug/L	NA	NA		TIC
WW-5-909	25-Jan-16	1601261335B	8270D	8270	TIC	Unknown	12	ug/L	NA	NA		TIC
WW-5-909	25-Jan-16	1601261335B	8270D	8270	003622-84-2	Benzenesulfonamide, N-butyl-	78	ug/L	NA	NA		TIC
WW-5-909	25-Jan-16	1601261335B	8270D	8270	208-96-8	Acenaphthylene	ND	ug/L	0.19	0.050		
WW-5-909	25-Jan-16	1601261335B	8270D	8270	56-55-3	Benz(a)anthracene	ND	ug/L	0.19	0.050		
WW-5-909	25-Jan-16	1601261335B	8270D	8270	50-32-8	Benzo(a)pyrene	ND	ug/L	0.19	0.050		
WW-5-909	25-Jan-16	1601261335B	8270D	8270	205-99-2	Benzo(b)fluoranthene	ND	ug/L	0.19	0.050		
WW-5-909	25-Jan-16	1601261335B	8270D	8270	207-08-9	Benzo(k)fluoranthene	ND	ug/L	0.19	0.050		
WW-5-909	25-Jan-16	1601261335B	8270D	8270	117-81-7	Bis(2-ethylhexyl) Phthalate	ND	ug/L	4.7	0.57		
WW-5-909	25-Jan-16	1601261335B	8270D	8270	218-01-9	Chrysene	ND	ug/L	0.19	0.050		
WW-5-909	25-Jan-16	1601261335B	8270D	8270	53-70-3	Dibenz(a,h)anthracene	ND	ug/L	0.19	0.050		
WW-5-909	25-Jan-16	1601261335B	8270D	8270	118-74-1	Hexachlorobenzene	ND	ug/L	0.19	0.050		
WW-5-909	25-Jan-16	1601261335B	8270D	8270	193-39-5	Indeno(1,2,3-cd)pyrene	ND	ug/L	0.19	0.050		
WW-5-909	25-Jan-16	1601261336B	6010C	METALS	7429-90-5	Aluminum, Total	ND	mg/L	0.10	0.010		
WW-5-909	25-Jan-16	1601261336B	6020A	METALS	7440-36-0	Antimony, Total	ND	mg/L	0.0010	0.0004		

WW-5-909	25-Jan-16	1601261336B	6020A	METALS	7440-38-2	Arsenic, Total	0.004	mg/L	0.0010	0.0004		
WW-5-909	25-Jan-16	1601261336B	6010C	METALS	7440-39-3	Barium, Total	0.022	mg/L	0.020	0.002		
WW-5-909	25-Jan-16	1601261336B	6010C	METALS	7440-41-7	Beryllium, Total	ND	mg/L	0.0030	0.0002		
WW-5-909	25-Jan-16	1601261336B	6010C	METALS	7440-42-8	Boron, Total	0.23	mg/L	0.20	0.02		
WW-5-909	25-Jan-16	1601261336B	6010C	METALS	7440-43-9	Cadmium, Total	ND	mg/L	0.0050	0.0002		
WW-5-909	25-Jan-16	1601261336B	6010C	METALS	7440-70-2	Calcium, Total	79.8	mg/L	1.0	0.2		
WW-5-909	25-Jan-16	1601261336B	6010C	METALS	7440-47-3	Chromium, Total	0.002	mg/L	0.010	0.0003		J
WW-5-909	25-Jan-16	1601261336B	6010C	METALS	7440-48-4	Cobalt, Total	ND	mg/L	0.050	0.002		
WW-5-909	25-Jan-16	1601261336B	6010C	METALS	7440-50-8	Copper, Total	ND	mg/L	0.020	0.003		
WW-5-909	25-Jan-16	1601261336B	6010C	METALS	7439-89-6	Iron, Total	ND	mg/L	0.10	0.009		
WW-5-909	25-Jan-16	1601261336B	6010C	METALS	7439-92-1	Lead, Total	ND	mg/L	0.050	0.005		
WW-5-909	25-Jan-16	1601261336B	6010C	METALS	7439-95-4	Magnesium, Total	36.4	mg/L	1.0	0.010		
WW-5-909	25-Jan-16	1601261336B	6010C	METALS	7439-96-5	Manganese, Total	0.009	mg/L	0.010	0.0010		J
WW-5-909	25-Jan-16	1601261336B	7470A	METALS	7439-97-6	Mercury, Total	ND	mg/L	0.00020	0.00004		
WW-5-909	25-Jan-16	1601261336B	6010C	METALS	7439-98-7	Molybdenum, Total	0.008	mg/L	0.025	0.002		J
WW-5-909	25-Jan-16	1601261336B	6010C	METALS	7440-02-0	Nickel, Total	0.006	mg/L	0.040	0.002		J
WW-5-909	25-Jan-16	1601261336B	6010C	METALS	7440-09-7	Potassium, Total	4.6	mg/L	2.0	0.05		
WW-5-909	25-Jan-16	1601261336B	6010C	METALS	7782-49-2	Selenium, Total	ND	mg/L	0.010	0.005		
WW-5-909	25-Jan-16	1601261336B	6010C	METALS	7440-22-4	Silver, Total	ND	mg/L	0.010	0.0006		
WW-5-909	25-Jan-16	1601261336B	6010C	METALS	7440-23-5	Sodium, Total	131	mg/L	1.0	0.09		
WW-5-909	25-Jan-16	1601261336B	6010C	METALS	7440-24-6	Strontium, Total	2.34	mg/L	0.10	0.002		
WW-5-909	25-Jan-16	1601261336B	6020A	METALS	7440-28-0	Thallium, Total	ND	mg/L	0.0010	0.00003		
WW-5-909	25-Jan-16	1601261336B	6010C	METALS	7440-31-5	Tin, Total	ND	mg/L	0.50	0.02		
WW-5-909	25-Jan-16	1601261336B	6010C	METALS	7440-62-2	Vanadium, Total	0.013	mg/L	0.050	0.0010		J
WW-5-909	25-Jan-16	1601261336B	6010C	METALS	7440-66-6	Zinc, Total	0.02	mg/L	0.020	0.007		J
WW-5-909	25-Jan-16	1601261337B	SM 2320 B-1997(20	ANIONS	NA	Alkalinity, Total as CaCO3	126	mg/L	2.0	0.3		
WW-5-909	25-Jan-16	1601261337B	300.0	ANIONS	16887-00-6	Chloride	66	mg/L	2.0	1.0		
WW-5-909	25-Jan-16	1601261337B	300.0	ANIONS	16984-48-8	Fluoride, undistilled	0.43	mg/L	0.10	0.008		
WW-5-909	25-Jan-16	1601261337B	300.0	ANIONS	14808-79-8	Sulfate	397	mg/L	10	1		
WW-5-909	25-Jan-16	1601261410B	SM 2540 C-1997(20	SM2540C	NA	Total Dissolved Solids (TDS)	850	mg/L	10	4		
WW-5-909	25-Jan-16	1601261411B	6850	6850	14797-73-0	Perchlorate	0.81	ug/L	0.20	0.026		
WW-5-909	25-Jan-16	1601261412B	353.2	353.2	NA	Nitrate+Nitrite as Nitrogen	3.75	mg/L	0.20	0.010		
WW-5-909	25-Jan-16	1601261430B	PARAMS	PARAMS	NA	pH	7.78	NA	NA	NA		
WW-5-909	25-Jan-16	1601261430B	PARAMS	PARAMS	NA	Temperature	19.4	ºC	NA	NA		
WW-5-909	25-Jan-16	1601261430B	PARAMS	PARAMS	NA	Conductivity	1215	µS/cm	NA	NA		
WW-5-909	25-Jan-16	1601261430B	PARAMS	PARAMS	NA	Turbidity	1.19	NTU	NA	NA		