National Aeronautics and
Space Administration

Lyndon B. Johnson Space Center
White Sands Test Facility
P.O. Box 20
Las Cruces, NM 88004-0020

September 29, 2015

Reply to Attn of: RE-15-105

Mr. John E. Kieling
New Mexico Environment Department
Hazardous Waste Bureau
2905 Rodeo Park Drive East, Building 1
Santa Fe, NM 87505

Subject: Investigation Report for Evaluating Anomalous Detections of NDMA in JER-1 and JER-2

Enclosed is the Investigation Report for Evaluating Anomalous Detections of NDMA in JER-1 and JER-2 as required by NMED's June 19, 2014 Approval with Modifications of NASA's Investigation Work Plan for Evaluating Anomalous Detections of NDMA in Monitoring Wells JER-1 and JER-2 and NMED's Approval for Extension of Time – Investigation of Anomalous Detections of NDMA in Monitoring Wells JER-1 and JER-2. This submittal includes an Executive Summary as Enclosure 1, a paper copy of the report as Enclosure 2, and a CD-ROM with the complete report in PDF as Enclosure 3.

I certify under penalty of law that this document and all attachments were prepared under my direction or supervision in accordance with a system designed to assure that qualified personnel properly gather and evaluate the information submitted. Based on my inquiry of the person or persons who manage the system, or those persons directly responsible for gathering the information, the information submitted is, to the best of my knowledge and belief, true, accurate, and complete. I am aware that there are significant penalties for submitting false information, including the possibility of fine and imprisonment for known violations.

If you have any questions or comments concerning this submittal, please contact me at 575–524–5024.

Timothy J. Davis
Chief, Environmental Office

3 Enclosures

cc:
Ms. Kristen Van Horn
Hazardous Waste Bureau
New Mexico Environment Department
2905 Rodeo Park Drive East, Building 1
Santa Fe, NM 87505

Executive Summary

The National Aeronautics and Space Administration (NASA) White Sands Test Facility (WSTF) has provided a variety of test services and support to NASA for the United States space program, Department of Defense, Department of Energy, private industry, and foreign government agencies. Historical testing operations resulted in the creation of a groundwater contaminant plume, a portion of which extends beyond the WSTF industrial boundary towards the United States Department of Agriculture (USDA) Agricultural Research Service's Jornada Experimental Range (JER). In an effort to determine the full nature and extent of the groundwater contaminant plume near the JER, NASA installed two groundwater monitoring wells on JER property. JER-1 and JER-2 are Westbay multi-port wells with three monitoring zones each.

The monitoring zones of these wells have been sampled approximately quarterly since their installation in early 2004. During this time, N-nitrosodimethylamine (NDMA), a carcinogenic chemical associated with the utilization of rocket fuel at WSTF, has been detected in all monitoring zones of both wells. However, the detection of NDMA is not consistent with typical WSTF groundwater plume behavior. In conjunction with the New Mexico Environment Department (NMED), NASA determined that these anomalous detections of NDMA require further investigation.

In 2011, NASA performed an evaluation of Westbay monitoring wells at WSTF to determine if the lack of pre-sample purging in Westbay wells resulted in the collection of unrepresentative groundwater samples. One zone each within wells JER-1 and JER-2 were utilized for this test. The selected sampling zones in the wells were purged and sampled in an attempt to characterize the potential zone of stagnation surrounding the boreholes. During this evaluation, concentrations of NMDA declined significantly in JER-1-568 and JER-2-508. NASA concluded at that time that the anomalous NDMA detections in the JER wells were not fully representative of groundwater conditions in the area.

In order to better characterize NDMA concentrations in groundwater at the JER wells, NASA developed and submitted to NMED the Investigation Work Plan for Evaluating Anomalous Detections of NDMA in Monitoring Wells JER-1 and JER-2. The objective of the investigation was to evaluate anomalous detections of NDMA in multi-port groundwater monitoring wells JER-1 and JER-2 and determine if samples collected from the wells using standard Westbay sampling procedures were representative of groundwater conditions at these locations. To accomplish this objective, NASA performed investigation fieldwork that consisted of collecting field data, measuring groundwater indicator parameters, and collecting groundwater samples from each of the three Westbay sampling port in each JER well. After each sampling port was sampled, the pumping port located in the Westbay casing immediately beneath each sampling port was opened so that groundwater could be purged and groundwater samples collected. Samples were shipped to off-site laboratories and chemical analytical data were received, verified and validated, and evaluated as indicated in the work plan.

Based on the evaluations of groundwater indicators and chemical analytical data, NASA concludes that the Westbay sampling systems in JER-1 and JER-2 do not allow for the collection of representative groundwater samples at those locations. NASA also determined that, based on detections of trichloroethene and 1,1,2-Trichloro-1,2,2-trifluoroethane, there is evidence of northwestward plume migration in the investigation area. NASA recommends that the Westbay

sampling systems be removed from monitoring wells JER-1 and JER-2 and the wells converted to use a purgeable sampling system. Furthermore, NASA recommends that a similar monitoring well, ST-7, be converted as well. NASA proposes to convert these wells in 2016, in conjunction with the ongoing Westbay well conversion project.

National Aeronautics and
Space Administration

Investigation Report for Evaluating Anomalous Detections of NDMA in Monitoring Wells JER-1 and JER-2

September 2015

NM8800019434
NASA Johnson Space Center White Sands Test Facility
12600 NASA Road Las Cruces, New Mexico 88012

Investigation Report for Evaluating Anomalous Detections of NDMA in Monitoring Wells JER-1 and JER-2

September 2015

I certify under penalty of law that this document and all attachments were prepared under my direction or supervision in accordance with a system designed to assure that qualified personnel properly gather and evaluate the information submitted. Based on my inquiry of the person or persons who manage the system, or those persons directly responsible for gathering the information, the information submitted is, to the best of my knowledge and belief, true, accurate, and complete. I am aware that there are significant penalties for submitting false information, including the possibility of fine and imprisonment for knowing violations.

Timothy J. Davis
Chief, NASA Environmental Office

9/29/15
Date

Executive Summary

The National Aeronautics and Space Administration (NASA) White Sands Test Facility (WSTF) has provided a variety of test services and support to NASA for the United States space program, Department of Defense, Department of Energy, private industry, and foreign government agencies. Historical testing operations resulted in the creation of a groundwater contaminant plume, a portion of which extends beyond the WSTF industrial boundary towards the United States Department of Agriculture (USDA) Agricultural Research Service's Jornada Experimental Range (JER). In an effort to determine the full nature and extent of the groundwater contaminant plume near the JER, NASA installed two groundwater monitoring wells on JER property. JER-1 and JER-2 are Westbay multi-port wells with three monitoring zones each.

The monitoring zones of these wells have been sampled approximately quarterly since their installation in early 2004. During this time, N-nitrosodimethylamine (NDMA), a carcinogenic chemical associated with the utilization of rocket fuel at WSTF, has been detected in all monitoring zones of both wells. However, the detection of NDMA is not consistent with typical WSTF groundwater plume behavior. In conjunction with the New Mexico Environment Department (NMED), NASA determined that these anomalous detections of NDMA require further investigation.

In 2011, NASA performed an evaluation of Westbay monitoring wells at WSTF to determine if the lack of pre-sample purging in Westbay wells resulted in the collection of unrepresentative groundwater samples. One zone each within wells JER-1 and JER-2 were utilized for this test. The selected sampling zones in the wells were purged and sampled in an attempt to characterize the potential zone of stagnation surrounding the boreholes. During this evaluation, concentrations of NMDA declined significantly in JER-1-568 and JER-2-508. NASA concluded at that time that the anomalous NDMA detections in the JER wells were not fully representative of groundwater conditions in the area.

In order to better characterize NDMA concentrations in groundwater at the JER wells, NASA developed and submitted to NMED the *Investigation Work Plan for Evaluating Anomalous Detections of NDMA in Monitoring Wells JER-1 and JER-2*. The objective of the investigation was to evaluate anomalous detections of NDMA in multi-port groundwater monitoring wells JER-1 and JER-2 and determine if samples collected from the wells using standard Westbay sampling procedures were representative of groundwater conditions at these locations. To accomplish this objective, NASA performed investigation fieldwork that consisted of collecting field data, measuring groundwater indicator parameters, and collecting groundwater samples from each of the three Westbay sampling port in each JER well. After each sampling port was sampled, the pumping port located in the Westbay casing immediately beneath each sampling port was opened so that groundwater could be purged and groundwater samples collected. Samples were shipped to off-site laboratories and chemical analytical data were received, verified and validated, and evaluated as indicated in the work plan.

Based on the evaluations of groundwater indicators and chemical analytical data, NASA concludes that the Westbay sampling systems in JER-1 and JER-2 do not allow for the collection of representative groundwater samples at those locations. NASA also determined that, based on detections of trichloroethene and 1,1,2-Trichloro-1,2,2-trifluoroethane, there is evidence of northwestward plume migration in the investigation area. NASA recommends that the Westbay sampling systems be removed from monitoring wells JER-1 and JER-2 and the wells converted to use a purgeable sampling system. Furthermore, NASA recommends that a similar monitoring well, ST-7, be converted as well. NASA proposes to convert these wells in 2016, in conjunction with the ongoing Westbay well conversion project.

The use of trademarks or names of manufacturers is for accurate reporting and does not constitute an official endorsement either expressed or implied of such products or manufacturers by the National Aeronautics and Space Administration.

Table of Contents

Executive Summary iii
Table of Contents iv
List of Figures and Tables vi
List of Acronyms vii
1.0 Introduction 1
1.1 Regulatory Requirements 1
1.2 JER-1 and JER-2 Location and Description 2
1.3 Purpose and Method of Investigation 2
1.4 Type of Results Presented in the Report 2
2.0 Background 2
2.1 Site Conditions 3
2.1.1 Surface Conditions 3
2.1.2 Subsurface Conditions 3
2.2 Nature and Extent of Contamination 3
2.3 Previous Investigations and Post-Closure Monitoring 3
2.3.1 Routine Groundwater Monitoring 3
2.3.2 Groundwater Monitoring in the JER Area 4
2.3.3 Westbay Well Evaluation 4
3.0 Scope of Activities 5
3.1 Field Data Collection 5
3.2 Groundwater Sampling 5
3.3 Groundwater Analytical Testing 6
3.4 Investigation-Derived Waste (IDW) Management 6
3.5 Data Evaluation and Management 6
4.0 Field Investigation Results 7
4.1 Surface Conditions 7
4.2 Subsurface Conditions 7
4.3 Field Data 7
4.4 Groundwater Chemical Analytical Data 7
5.0 Conclusions 8
5.1 Groundwater Indicator Parameters 8
5.2 Evaluation of Analytical Results 8
5.3 Overall Conclusions 9
6.0 Recommendations 10
7.0 References 10

Figures 12
Tables 16
Appendix A Well Completion Diagrams for JER-1 and JER-2 ..... A-1
Appendix B Field Logbook Entries B-1
Appendix C Chemical Analytical Data C-1

List of Figures and Tables

Figure 1.1 WSTF Location Map 13
Figure 1.2 WSTF Site Features with NDMA and TCE Groundwater Contaminant Plumes 14
Figure 1.3 JER Monitoring Well Locations 15
Table 2.1 Historical Freon 113 Detections in JER-1 and JER-2 17
Table 3.1 JER-1 and JER-2 Sampling and Pumping Port Information 18
Table 3.2 Purge and Sample Requirements for Pumping Ports in JER-1 and JER-2 19
Table 4.1 Groundwater Indicator Parameters Collected at JER-1 and JER-2 20
Table 4.2 Concentrations of NDMA, TCE, and Freon 113 at JER-1 and JER-2 22
Table 6.1 Westbay Well Conversion Schedule 24

List of Acronyms

µg/L	microgram per liter
µS/cm	microsiemens per centimeter
EPA	Environmental Protection Agency
ft	feet
GMP	Groundwater Monitoring Plan
IDW	Investigation-Derived waste
in.	inch
IWP	Investigation Work Plan
JDMB	Jornada del Muerto Basin
JER	Jornada Experimental Range
JSC	Johnson Space Center
MDL	Method detection limit
MPCA	Mid-plume Constriction Area
NASA	National Aeronautics and Space Administration
ND	Not detected
NDMA	N-nitrosodimethylamine
ng/L	Nanograms per liter
NMED	New Mexico Environment Department
NTU	Nephelometric Turbidity Units
OD	Outside diameter
PCC	Post-closure Care
PCE	Tetrachloroethene
PVC	Polyvinyl Chloride
QA	Quality Assurance
RCRA	Resource Conservation and Recovery Act
TCE	Trichloroethene
TDS	Total Dissolved Solid
TOC	Total organic carbon
USDA	United States Department of Agriculture
VOC	Volatile Organic Compound
WSTF	White Sands Test Facility

1.0 Introduction

The National Aeronautics and Space Administration (NASA) White Sands Test Facility (WSTF) currently operates as a field test installation under the NASA Lyndon B. Johnson Space Center (JSC) in Houston, Texas. WSTF is a restricted access site, and all activities are industrial in nature. Although the primary purpose of the facility is to provide test services and support to NASA for the United States Space Program, services are also provided for the Department of Defense, Department of Energy, private industry, and foreign government agencies. WSTF operates several laboratory facilities that conduct compatibility testing and simulated use tests for space-bound materials. The WSTF U.S. Environmental Protection Agency (EPA) Facility Identification Number is NM8800019434.

WSTF is located approximately 18 miles northeast of Las Cruces, New Mexico and 65 miles north of El Paso, Texas. Figure 1.1 provides a vicinity map that shows the general location of WSTF relative to other dominant features and major properties in southern Doña Ana County. Historical operations at WSTF have resulted in a groundwater plume requiring extensive investigation activities and associated corrective actions. Groundwater contaminants migrated from the WSTF source areas into the aquifer of the Jornada del Muerto Basin (JDMB), creating a complex comingled contaminant plume of volatile organic compounds (VOCs) and N-nitrosodimethylamine (NDMA). Conceptualized plume boundaries are shown in Figure 1.2. The nature and extent of groundwater contamination at WSTF is discussed further in Section 2.2. The majority of the groundwater plume extends from the WSTF industrial areas west towards the JDMB; however, there is a smaller northwest-trending portion of the groundwater contaminant plume that extends from the WSTF Mid-plume Constriction Area (MPCA) towards the United States Department of Agriculture (USDA) Agricultural Research Service's Jornada Experimental Range (JER) (Figure 1.2).

The primary objective of this investigation was to evaluate anomalous detections of NDMA in multi-port groundwater monitoring wells JER-1 and JER-2. To accomplish this objective, NASA performed an evaluation of historical JER-1 and JER-2 groundwater monitoring well analytical data and then developed and submitted the *Investigation Work Plan for Evaluating Anomalous Detections of NDMA in Monitoring Wells JER-1 and JER-2* (NASA, 2013). NASA performed fieldwork in accordance with the approved plan between October 2014 and April 2015. Analytical data was received and evaluated. This report describes the fieldwork performed, data evaluated, and presents the results of the investigation, including conclusions and recommendations for further work.

1.1 Regulatory Requirements

On November 7, 2013, NASA submitted the *Investigation Work Plan for Evaluating Anomalous Detecitions of NDMA in Monitoring Wells JER-1 and JER-2* (IWP for JER NDMA; NASA, 2013). The New Mexico Environment Department (NMED) approved the IWP for JER NDMA with modifications on June 19, 2014 (NMED, 2014b). NASA submitted the *Status Update and Request for Extension of Time – Investigation of Anomalous Detections of NMED in Monitoring Wells JER-1 and JER-2* on June 4, 2015 (NASA, 2015a). NMED approved the request for additional time on June 17, 2015 (NMED, 2015a), extending the due date for the investigation report to September 30, 2015. NMED approval of the IWP for JER NDMA and subsequent request for extension of time are the regulatory requirements for performing the work and providing this report.

1.2 JER-1 and JER-2 Location and Description

Groundwater monitoring wells JER-1 and JER-2 are Westbay®[1] multi-port monitoring wells installed beyond the WSTF boundary on property owned and controlled by the USDA JER in Section 29, T20S, R3E (Figure 1.3). Each monitoring well consists of a 2.9-inch (in.) outer diameter (OD) polyvinyl chloride (PVC) casing with three sampling ports and adjacent pumping ports installed within a 6.625-in. OD outer PVC casing. Completion diagrams for the wells are provided in Appendix A.

1.3 Purpose and Method of Investigation

The purpose of this investigation was to evaluate anomalous detections of NDMA in multi-port groundwater monitoring wells JER-1 and JER-2 and determine if samples collected from the wells using standard Westbay sampling procedures were representative of groundwater conditions at these locations. The investigation consisted of purging groundwater from the JER wells monitoring zones and collecting samples to characterize groundwater within, in the vicinity of, and beyond the Westbay and conventional casing and the borehole. Analytical data from the samples were verified and validated in accordance with established WSTF data management procedures, evaluated by qualified environmental personnel, and compared to analytical data from samples collected using standard Westbay sampling procedures.

1.4 Type of Results Presented in the Report

The results presented and discussed in this report consist primarily of chemical analytical data from groundwater samples collected from the three sampling and pumping ports in each Westbay well. Groundwater samples were analyzed for NDMA, VOCs, metals, total organic carbons (TOCs), total dissolved solids (TDSs), and nitrite/nitrate as nitrogen. Field data were also collected during the sampling events and are presented in this report.

2.0 Background

WSTF was established in the early 1960s to support the NASA Apollo Space Program. Primary site activities served to: develop, qualify, refurbish, and test spacecraft propulsion systems, subsystems, and ground support equipment; investigate flight hardware anomalies; test materials and components; and perform hazard and failure analyses.

Hazardous wastes generated at WSTF during testing and evaluation procedures were historically managed in surface impoundments and underground storage tanks that leaked, subsequently contaminating groundwater. From the early 1960s through the mid-1980s, waste impoundments in the 200, 300, 400, and 600 industrial areas contributed to groundwater contamination. To minimize further releases of contaminants, these historical waste impoundments were capped and closed under the Resource Conservation and Recovery Act (RCRA), and approved by NMED in 1989. The closures were permitted under a Post-Closure Care (PCC) Permit in the early 1990s and continue to be monitored in accordance with the permit and related plans. The locations of these closures, as well as other pertinent WSTF features, are provided in Figure 1.2.

[1] Westbay® is a registered trademark of Nova Metrix LLC.

2.1 Site Conditions

General site conditions at WSTF were described in the RCRA Facilitiy Investigation (NASA, 1996) and the Groundwater Monitoring Plan (GMP; NASA, 2015b). This section provides a brief discussion of surface and subsurface conditions in the area of the JER wells.

2.1.1 Surface Conditions

There are no natural surface water bodies in the vicinity of the JER wells. The closest, Isaack Lake, is a playa lake located approximately 8 miles southwest of the site at the lowest elevation in the JDMB. Topographic maps indicate that numerous well-developed arroyos originate in the eastern areas of WSTF and extend westward before terminating northeast of Isaack Lake. Sheet flow drainage patterns characterize the western half of WSTF, where the JER wells are located.

2.1.2 Subsurface Conditions

The JER area is characterized by a 410-foot (ft) to 560-ft thick sequence of coalescent alluvial fan deposits of the Late Tertiary Santa Fe Group underlain by rhyolitic volcanic bedrock (Appendix A). The alluvium is typically an unconsolidated, poorly sorted, pebble to boulder, polygenetic conglomerate. Well JER-1 is located near the eastern margin of the Western Boundary Fault Zone, which is a series of normal step faults in the bedrock. As a result, bedrock is dropped down toward the west, and the water table transitions from within fractured bedrock to saturated alluvium along an east-west line between the two JER wells.

2.2 Nature and Extent of Contamination

Contaminants in groundwater originated from historical waste management operations in the WSTF industrial areas (Figure 1.2). NDMA contamination primarily originated from operations in the 300 and 400 Areas. Most of the VOC contamination [trichloroethene (TCE), tetrachloroethene (PCE), trichlorofluoromethane (Freon®[2] 11), dichlorofluoromethane (Freon 21), 1,1,2-Trichloro-1,2,2-trifluoroethane (Freon 113), and chloroform] originated from the 200 Area with lesser contributions from the 100, 300, 400, and 600 Areas. The RCRA Facilitiy Investigation (NASA, 1996) and the GMP (NASA, 2015b) provide additional specific information related to the management and release of chemical wastes that constitute the groundwater contaminant plume. Section 2.2 of the GMP provides a detailed discussion of the spatial distribution of the five primary contaminants of concern in groundwater at WSTF, including the two most widespread groundwater contaminants: NDMA and TCE.

2.3 Previous Investigations and Post-Closure Monitoring

Various elements of the WSTF groundwater monitoring program are most applicable to the evaluation of NDMA detections in monitoring wells JER-1 and JER-2. These are summarized in the following sections.

2.3.1 Routine Groundwater Monitoring

A detailed discussion of the results of routine groundwater monitoring at WSTF was provided in the Periodic Monitoring Report for the Second Quarter of 2015 (NASA, 2015c). That report included a comprehensive database of historical chemical analytical data from groundwater monitoring.

[2] Freon® is a registered trademark of E.I. du Pont de Nemours & Company Corporation (DuPont).

2.3.2 Groundwater Monitoring in the JER Area

JER-1 and JER-2 were sampled approximately quarterly between their installation (between October 2003 and January 2004) and development of the IWP for JER NDMA. Analytical data from the initial sampling events at these wells indicated the potential presence of very low levels of two WSTF contaminants of concern: Freon 113 and NDMA. Freon 113 was detected at very low levels in three samples collected at JER-1-688 and JER-2-587 in late April and early May 2004. There was one subsequent detection of this contaminant in JER-1-688 below the practical quantitation limit in 2008. These sporadic and unsubstantiated detections led NASA to conclude that Freon 113 was not present in the groundwater at the JER well locations. Table 2.1 summarizes these Freon 113 detections and shows that Freon 113 has not been detected in samples collected using Westbay sampling equipment since 2008. Freon 113 concentrations are useful in monitoring the groundwater plume, but it has not been designated as a hazardous constituent since it was reevaluated in accordance with the Permit (NMED, 2009) in 2012. TCE, one of the typical leading contaminants in WSTF groundwater plume migration, has not been detected in samples collected from the Westbay sampling ports in the JER wells using standard Westbay sampling procedures.

NDMA was detected on a relatively consistent basis in all six zones of the two JER wells by low-level analyses performed by two separate laboratories. However, analytical results for NDMA in these wells were not consistent. Unlike typical NDMA detections in WSTF groundwater monitoring wells, low-level NDMA results were frequently not repeatable at zones in monitoring wells JER-1 and JER-2, making it difficult to fully characterize the nature of NDMA contamination in these wells. Section 2.4.3 and Table 2.2 of the IWP for JER NDMA provide a detailed analysis of the NDMA detections in the JER wells prior to this investigation. The anomalous nature of NDMA detections in these wells led NASA to question the representativeness of the analytical data. As a result of these anomalous detections, a monitoring zone of each JER well was evaluated during NASA's Westbay well evaluation in 2011, as described in the subsequent section.

2.3.3 Westbay Well Evaluation

On June 25, 2010, NMED responded to a NASA Periodic Monitoring Report with a letter (NMED, 2010) questioning the representativeness of samples collected from NASA's Westbay monitoring wells at WSTF. In that letter, NMED directed NASA to perform an evaluation of the representativeness of groundwater samples collected from Westbay monitoring wells. NASA developed and submitted the *Investigation Work Plan for Evaluating the Representativeness of Groundwater Samples Collected from Westbay Wells* on November 19, 2010 (NASA, 2010), which was approved by NMED on January 14, 2011 (NMED, 2011a). This evaluation consisted of purging the pumping ports associated with specific monitoring zones in several Westbay wells while monitoring a variety of groundwater indicator parameters and collecting groundwater samples for various analyses. NASA performed the required investigation in 2011 and submitted to NMED the *Investigation Report for Evaluating the Representativeness of Groundwater Samples Collected from Westbay Wells* on October 20, 2011 (NASA, 2011). In the report, NASA concluded that Westbay monitoring wells may not be appropriate for all locations, but that data generated from them is typically adequate for the decision-making needs of the WSTF groundwater monitoring and restoration programs. NMED approved the report on December 16, 2011 and concluded that in some locations, Westbay wells do not provide representative groundwater samples (NMED, 2011b).

3.0 Scope of Activities

The investigation consisted of fieldwork (field data and groundwater sample collection), chemical analysis of groundwater samples submitted to a contracted off-site laboratory, and the evaluation of chemical analytical data from groundwater samples.

3.1 Field Data Collection

Field data consists of information gathered during purging and sampling operations at the JER wells. Prior to and during the purging operations described in Section 3.2, WSTF personnel monitored and recorded pertinent field data such as date, time, weather conditions, personnel present, pumping and sampling equipment in use, sample collection location, conditions that could negatively impact sample quality, and other relevant information. Groundwater indicator parameters, including pH, temperature, conductivity, and turbidity, were measured at the intervals specified in the IWP for JER NDMA. Groundwater indicator parameters were monitored using a calibrated flow-through cell in accordance with WSTF's established groundwater sampling procedures. This information, including instrument calibration/verification information, was recorded in the field logbook for the sampling event.

3.2 Groundwater Sampling

The objective of this investigation was to determine if the anomalous detections of NDMA in JER-1 and JER-2 are representative of aquifer conditions at the locations of the wells. Using current procedural guidance and accepted sampling practices, Westbay multi-port monitoring wells are not purged prior to the collection of groundwater samples. Instead, samples are collected directly from the formation utilizing specialized tools that access one-way valves in the Westbay casing. These sampling ports are used to draw groundwater directly from outside the Westbay casing into clean stainless steel sample collection tubes and dispensed into sample containers. This practice may result in the collection of stagnant groundwater that is not representative of actual groundwater conditions beyond the influence of the monitoring well or borehole.

Immediately beneath each sampling port in the Westbay casing string is a pumping port that can be opened to access the aquifer. The sampling and pumping ports in JER-1 and JER-2 are identified in Table 3.1. Although Westbay pumping ports are located deeper than sampling ports, they carry the same designation as their accompanying sampling port in order to facilitate the comparison of data within this report. In order to collect groundwater samples that are not influenced by the stagnation suspected in the vicinity of the Westbay casing, each pumping port in the two JER wells was used to purge groundwater from the well through the port. The following sequence was performed at each sampling and purging location in JER-1 and JER-2.

1. Field crews confirmed that the pumping port was closed using NASA-owned Westbay equipment.
2. A set of baseline groundwater samples was collected from the Westbay sampling port using existing equipment and current Westbay sampling procedures. A set of samples consisted of VOCs, low-level NDMA, TOC, TDS, metals, and nitrite/nitrate. Groundwater indicator parameters were also measured and recorded.
3. The pumping port associated with the sampling port was opened.
4. A decontaminated non-dedicated purge pump was inserted in the Westbay casing and lowered into the water within the casing.
5. The pump was activated and used to purge one casing volume from the Westbay casing (a volume of water equal to the volume in the casing between the pumping port and the top of the water in the casing).

6. When one casing volume was removed from the Westbay casing, indicator parameters were measured and recorded and a set of groundwater samples was collected from the pump discharge. These initial samples were expected to be consistent with historical samples collected from the Westbay wells when purging is not performed. At pumping port JER-1-688, the first zone to be sampled, a miscommunication in the fieldwork assignment resulted in a failure to meaure indicator parameters and collect groundwater samples after the initial purging was performed.
7. An additional volume of water equal to the internal volume of the screened interval of the outer conventional casing (18 gallons) was then purged. Another set of samples and groundwater indicator parameters were collected. These samples were expected to represent groundwater conditions within the borehole, but outside of the conventional outer casing.
8. An additional volume of groundwater equal to the volume of the borehole surrounding the screened interval (44 gallons) was purged. Groundwater indicator parameters and samples that were expected to represent the groundwater immediately outside of the borehole were collected.
9. A volume of groundwater equal to two additional borehole volumes (124 gallons) was then purged. Groundwater indicator parameters and samples collected after this purge step were expected to represent groundwater conditions within the aquifer beyond the immediate influence of the monitoring well and borehole.
10. An additional 124 gallons was purged, after which groundwater indicator parameters were measured and a final set of samples was collected.
11. The purge pump was removed the Westbay casing and decontaminated.
12. The pumping port was closed and the process was repeated at the remaining two sampling and pumping ports in the well.

Table 3.2 summarizes the purging and sampling operations performed at each zone of JER-1 and JER-2.

Groundwater samples were managed in accordance with established site-specific procedural documentation and regularly shipped to off-site contracted analytical laboratories for the analyses specified in the IWP for JER NDMA.

3.3 Groundwater Analytical Testing

At each sampling interval described in Section 3.1, a set of groundwater samples was collected for the analsysis of VOCs by SW-846 Method 8260C, NDMA using high resolution gas chromatographic/mass spectrometric/isotope dilution techniques, TOC by SW-846 Method 9060, TDS by Standard Method 2540C, metals by several accepted methods, and nitrite/nitrate as nitrogen by EPA Method 353.2.

3.4 Investigation-Derived Waste (IDW) Management

IDW generated and managed during this investigation consisted of purged groundwater and potentially contaminated debris (personal protective equipment and disposable sampling equipment that had come into contact with contaminated groundwater). Purged groundwater was collected and stored in containers meeting the provisions of 40 CFR 262.34 (less than 90-day requirements) and disposed of at the Mid-plume Interception and Treatment System in accordance with the provisions established in the GMP (NASA, 2015b). Contaminated debris was accumulated at each work site and transported to the appropriate satellite accumulation area at the end of each shift.

3.5 Data Evaluation and Management

Field data, primarily groundwater indicator parameters, were collected in the field and used to ensure that groundwater samples collected were representative of the groundwater being purged. Chemical analytical data were received from the analytical laboratory and loaded into the WSTF environmental database.

Validation and verification steps were performed by qualified environmental personnel in accordance with the site-specific procedures summarized in the GMP (NASA, 2015b). Chemical analytical data were qualitatively evaluated as described in the results section. Final data are transferred to the WSTF environmental database archive for future use and long-term retention.

4.0 Field Investigation Results

This section presents the results obtained during field investigation activities. Field activities described in the IWP for JER NDMA were initiated at Westbay monitoring well JER-1-688. Field data and samples were collected from the sampling and pumping ports between October 1 and October 3, 2014. After several attempts to open the two other pumping ports in the well, NASA contacted Westbay to obtain an alternate open/close tool. The issues with the pumping ports in JER-1 were resolved in December 2014 and investigation fieldwork was resumed on January 7, 2015. Sampling was completed at JER-1-568 on January 28, 2015 and at JER-1-488 on February 19, 2015. The three Westbay sampling ports in JER-2 were sampled in March 2015 to comply with the routine WSTF groundwater sampling schedule. Additional sampling for the IWP for JER NDMA was performed at JER-2-689 between April 18 and 23, 2015, at JER-2-587 on April 24, 2015, and at JER-2-508 between April 28 and May 7, 2015.

4.1 Surface Conditions

The existing geological surface conditions, as described in Section 2.5 of the GMP (NASA, 2015b) did not have a significant impact on the implementation of this investigation. Therefore, surface conditions were not evaluated during the fieldwork associated with this investigation.

4.2 Subsurface Conditions

The subsurface conditions applicable to this investigation were described in Section 2.1.2. With the exception of groundwater purging and sampling operations summarized in Section 3.2, no subsurface investigations were performed during the fieldwork associated with this investigation.

4.3 Field Data

Field data such as the sample collection location, the date of the sampling event, weather conditions at the time of sampling, personnel present for the activity, pumping and sampling equipment in use, conditions that could negatively impact sample quality, and other relevant information were recorded in the field logbook at each sampling event. Field logbook entries are provided in Appendix B. Groundwater indicator parameters were measured at each sampling location immediately prior to sample collection and are presented in Table 4.1. The depth to water was also measured prior to the collection of groundwater samples from each Westbay sampling port. Depth to water measurements indicate that the groundwater table has declined approximately 22 ft at JER-1 and approximately 16 ft at JER-2 since the wells were insallated in 2004.

4.4 Groundwater Chemical Analytical Data

Chemical analytical data were received from the contracted laboratories and were verified and validated in accordance with established WSTF data management procedures. Chemical analytical results for samples collected during this investigation are summarized in Table 4.2, which provides results for several key analytes. Complete chemical analytical results for all samples collected are provided in Appendix C.

5.0 Conclusions

This section discusses the results obtained from monitoring and sampling performed during the investigation and draws conclusions based on an evaluation of the available field and chemical analytical data presented in Sections 4.3 and 4.4.

5.1 Groundwater Indicator Parameters

Groundwater indicator parameters (pH, temperature, conductivity, and turbidity) were measured at each sampling and pumping port location as described in Sections 3.1 and 3.2. With the exception of JER-1-488, the pH in sampled groundwater was measured at greater than 8 from the Westbay sampling ports, after which it dropped steadily to stabilize in the mid-7 range in groundwater collected from the pumping ports. At JER-1-488, the initial pH measured in groundwater collected from the Westbay sampling port was 7.65, while the pH in groundwater from the pumping port quickly stabilized at approximately 8.7. At all six monitoring locations in the study, groundwater conductivity measurements were in excess of 1,000 microsiemens per centimeter (µS/cm) in the initial sample collected from the Westbay sampling ports. Conductivity measurements in the groundwater purged from the pumping ports became relatively stable at levels 65 to 175 µS/cm less than initial measurements. Groundwater temperature measurements became relatively stable towards the end of purging in five of the six monitoring locations in the two JER wells. At JER-2-689, temperature measurements were relatively consistent throughout purging until the last sampling event when the temperature anomalously increased nearly 3 °C. Turbidity measurements at the monitoring locations ranged from below 1 NTU to high single digits. These measurements are consistent with other sampling locations at WSTF and are not remarkable.

The IWP for JER NDMA (NASA, 2013) states that “the stabilization of indicator parameters within ±10% over several consecutive measurements indicates that representative groundwater has been collected.” Except for the anomalous increase in temperature in the last groundwater sample from JER-2-589, all pH, temperature, and conductivity measurements stabilized to within ±10% in the last three measurement intervals at each monitoring location. This stability indicates that representative groundwater samples were collected, particularly after the Westbay casing, outer conventional casing, and the borehole had been evacuated of stagnant water. In general, the changes in groundwater indicator parameters during purging at the monitoring locations in the JER wells indicates that samples from the Westbay sampling ports may not be fully representative of formation water. However, purging adequate groundwater at these locations does result in the removal of stagnant groundwater and the collection of representative groundwater samples.

5.2 Evaluation of Analytical Results

Groundwater samples were collected from the Westbay sampling and pumping ports at each of the three zones in monitoring wells JER-1 and JER-2. Analytical data were received from the off-site contracted laboratories and reviwed by NASA personnel for trends as indicated in Section 6.6 of the IWP for JER NDMA (NASA, 2013). Although data are available for numerous analytes (Appendix C), the primary objective of the investigation was to evaluate NDMA concentrations in the two monitoring wells. This section provides that evaluation. In addition, the relatively consistent detection of TCE and Freon 113 in the two monitoring wells requires evaluation and discussion. Chemical analytical data for these constituents are presented in Table 4.2.

The evaluation of chemical analytical data indicates that NDMA concentrations in the final sets of samples collected from the pumping ports were not consistent with concentations in the initial groundwater sample collected from the Westbay sampling ports. At three sampling locations (JER-2-587, JER-1-488, and JER-1-568), NDMA was detected in the sample from the Westbay sampling port, but

concentrations trended downward to non-detect after some or all purging had been performed. At JER-1-488, NDMA was only detected in the initial sample from the sampling port and was not detected in the five samples collected during purging at the pumping port. At JER-1-688, NDMA concentrations declined slightly to 0.7 nanograms per liter (ng/L) after an initial concentration of 1.9 ng/L in the sample collected from the Westbay sampling port. NDMA was not detected in any of the samples collected at JER-2-508. At JER-2-689, NDMA concentrations trended upwards from the intial detection of 0.54 ng/L to 15 ng/L after 320 gallons had been purged. While NDMA concentrations in most sampling locations declined during the investigation as expected based on past testing (NASA, 2013; Section 6.7.1), the increase in NDMA at JER-2-689 is noteworthy. The concentration at JER-2-689 is the only final detection that exceeds the groundwater cleanup level of 4.9 ng/L, and bears further scrutiny. At four of the six sampling locations, NDMA concentrations changed significantly enough during the purging operation for NASA to conclude that NDMA results obtained from sampling the Westbay sampling ports are not representative of groundwater conditions at these two monitoring wells.

While NDMA was the primary focus of this investigation, samples were collected for the analysis of several other constituents often detected in the WSTF groundwater contaminant plume, including VOCs. The concentrations of most analytes were consistent with historical data from these sampling locations or were in the range of expected results based on past sampling at WSTF. Concentations of TCE and Freon 113, however, were not consistent with historical sampling at these wells. Freon 113 was detected at very low concentrations in JER-1-688 and JER-2-587 shortly after installation of these wells. These early detections were not repeated in the routine sampling conducted at these wells using standard Westbay sampling practices. TCE has not been detected at either well using standard Westbay sampling practices. However, it was detected at low levels at JER-1-568 and JER-2-508 during the Westbay well evaluation performed in 2011 (NASA, 2011). During the recent investigation, neither TCE nor Freon 113 was detected in the initial samples collected from the Westbay sampling ports at the six sampling locations in JER-1 and JER-2. However, TCE was detected in groundwater samples collected from the pumping ports at all six monitoring locations, with the highest detection of 3.2 µg/L observed midway through purging at JER-2-689. This concentration is below the current groundwater cleanup level of 4.9 µg/L. Freon 113 was detected in at least one sample at four of the sampling locations. Results from this investigation, when evaluated in conjunction with results from the Westbay well evaluation performed in 2011, clearly indicate that groundwater samples collected from the Westbay sampling ports do not fully represent the concentrations of TCE and Freon 113 in the formation outside of the immediate influence of the Westbay casing.

5.3 Overall Conclusions

NASA measured groundwater indicator parameters and collected groundwater samples for chemical analytical analyses from three zones in each JER groundwater monitoring well. Based on the evaluations of groundwater indicator paramaters and chemical analytical data (Sections 5.1 and 5.2), NASA concludes that the hydrogeological setting at JER-1 and JER-2, with its low hydraulic conductivity and slow natural groundwater movement, is not overly conducive to the use of no-purge sampling methods such as the Westbay multi-port system. The investigation results discussed in preceding sections clearly show that more representative groundwater samples are collected after purging has been performed. Samples collected from the Westbay sampling zones using established no-purge techniques do not adequately represent the groundwater at JER-1 or JER-2. NASA therefore concludes that Westbay wells are not appropriate for monitoring the groundwater at these locations.

Furthermore, based on the behavior of specific groundwater contaminants, NASA concludes that there is evidence of northwestward migration of the WSTF groundwater contiminant plume. Detections of TCE and Freon 113 at relatively low concentrations are consistent with the observed appearance of the WSTF groundwater plume in other monitoring wells on the conceptualized axis of the northwest-trending arm of

the contaminant plume. TCE was detected in groundwater monitoring wells BLM-5-527 and BLM-18-418 (Figure 1.2) approximately 10 years before NDMA was detected in those wells. In order to adequately evaluate this plume movement, improved groundwater monitoring capabilities are required at JER-1 and JER-2.

6.0 Recommendations

Based on an evaluation of groundwater indicator parameters and chemical analytical data obtained from samples collected at three sampling locations each in monitoring wells JER-1 and JER-2, NASA concluded (Section 5.3) that the existing Westbay sampling systems in these wells do not allow for the collection of representative groundwater samples. The IWP for JER NDMA (NASA, 2013) specified in Section 6.7.1 that if the investigation results indicated that groundwater samples collected from the Westbay sampling ports are not representative of actual groundwater conditions, monitoring wells JER-1 and JER-2 would need to be modified. As demonstrated in the preceding section, groundwater samples collected from the Westbay sampling ports do not fully represent the concentrations of NDMA, TCE, and Freon 113 observed in groundwater samples collected after adequate purging has been performed. Additionally, there is evidence that the WSTF groundwater contaminant plume continues to migrate to the northwest towards the JER. As a result, NASA recommends that the Westbay sampling systems in monitoring wells JER-1 and JER-2 be replaced with purgeable groundwater sampling systems.

On December 16, 2011, NMED approved NASA's *Investigation Report for Evaluating the Representativeness of Groundwater Samples Collected from Westbay Wells* (NASA, 2011) and directed NASA to convert eight Westbay monitoring wells to wells that could be purged prior to sampling. NASA provided a schedule for these conversions on June 28, 2012 (NASA, 2012), which was approved by NMED on July 20, 2012 (NMED, 2012) and revised several times for cause. To date, NASA has converted three of the eight wells to purgeable systems (BLM-32, JP-3, and WW-3), continues efforts to convert a fourth (BLM-28), and expects to complete the conversion of two additional wells (WW-4 and WW-5) in calendar year 2015 as required by the most recent NMED-approved schedule (NMED, 2014).

NASA proposes the addition of monitoring wells JER-1 and JER-2 to the current conversion schedule and anticipates that conversion of JER-1 and JER-2 will be performed in conjunction with the conversion of the two remaining wells; BLM-37 and ST-6. Available chemical analytical data from Westbay groundwater monitoring well, ST-7, indicates that hydrogeologic conditions there are similar to those at the JER wells. Therefore, NASA also proposes to convert ST-7 to a purgeable sampling system. Table 6.1 provides the current Westbay well conversion schedule and includes monitoring wells JER-1, JER-2, and ST-7. NASA expects to begin project planning for the conversion of monitoring wells BLM-37 and ST-6 in late 2015 or early 2016 and proposes to include the conversion of monitoring wells JER-1, JER-2, and ST-7 in these efforts.

7.0 References

NASA Johnson Space Center White Sands Test Facility. (1996, March 1). *Submittal of Draft RCRA Facility Investigation (RFI) and Corrective Measures Study (CMS) Reports*. NASA Johnson Space Center White Sands Test Facility, Las Cruces, NM.

NASA Johnson Space Center White Sands Test Facility. (2010, November 19). *Investigation Work Plan for Evaluating the Representativeness of Groundwater Samples Collected from Westbay Wells*. Las Cruces, NM.

NASA Johnson Space Center White Sands Test Facility. (2011, October 20). *Investigation Report for Evaluating the Representativeness of Groundawter Samples Collected from Westbay Wells.* Las Cruces, NM.

NASA Johnson Space Center White Sands Test Facility. (2012, June 28). *Schedule for Conversion of Westbay Wells*. Las Cruces, NM.

NASA Johnson Space Center White Sands Test Facility. (2013, November 7). *NASA WSTF Investigation Work Plan for Evaluating Anomalous Detections of NDMA in Monitoring Wells JER-1 and JER-2*. Las Cruces, NM.

NASA Johnson Space Center White Sands Test Facility. (2015a, June 4). *Status Update and Request for Extension of Time - Investigation of Anomalous Detections of NDMA in Monitoring Wells JER-1 and JER-2*. Las Cruces, NM.

NASA Johnson Space Center White Sands Test Facility. (2015b, April 29). *NASA WSTF Groundwater Monitoring Plan Update for 2015*. Las Cruces, NM.

NASA Johnson Space Center White Sands Test Facility. (2015c, July 29). *NASA WSTF Periodic Monitoring Report (PMR) - Second Quarter 2015*. Las Cruces, NM.

NMED Hazardous Waste Bureau, (2009, November 3). *Final Permit Decision and Response to Comments Hazardous Waste Permit for the White Sands Test Facility*. Las Cruces, NM.

NMED Hazardous Waste Bureau, (2010, June 25). *Quarterly Groundwater Monitoring - Fourth Quarter 2009*. Santa Fe, NM.

NMED Hazardous Waste Bureau, (2011a, January 14). *Notice of Approval with Modifications - Investigation Work Plan for Evaluating the Representiveness of Groundwater Samples Collected from Westbay Wells*. Santa Fe, NM.

NMED Hazardous Waste Bureau, (2011b, December 16). *Approval with Modifications Investigation Report for Evaluating the Representativeness of Groundwater Samples Collected from Westbay Wells*. Santa Fe, NM.

NMED Hazardous Waste Bureau, (2012, July 20). *Approval - Schedule for Conversion of Westbay Wells*. Santa Fe, NM.

NMED Hazardous Waste Bureau. (2014a, March 7). *Approval Extension Request Revised Westbay Well Conversion Schedule*. Santa Fe, NM.

NMED Hazardous Waste Bureau. (2014b, June 19). *Approval with Modifications: Investigation Work Plan for Evaluating Anomalous Detections of NDMA in Monitoring Wells JER-1 and JER-2*. Santa Fe, NM.

NMED Hazardous Waste Bureau. (2015a, June 17). *Approval Extension of Time - Investigation of Anomalous Detections of NDMA in Monitoring Wells JER-1 and JER-2*. Santa Fe, NM.

NMED Hazardous Waste Bureau. (2015b, June 17). *Approval Request for Extension of Time for the Conversion of Westbay Wells BLM-28 and BLM-32*. Santa Fe, NM.

Figures

Figure 1.1 **WSTF Location Map**

(SEE NEXT PAGE)

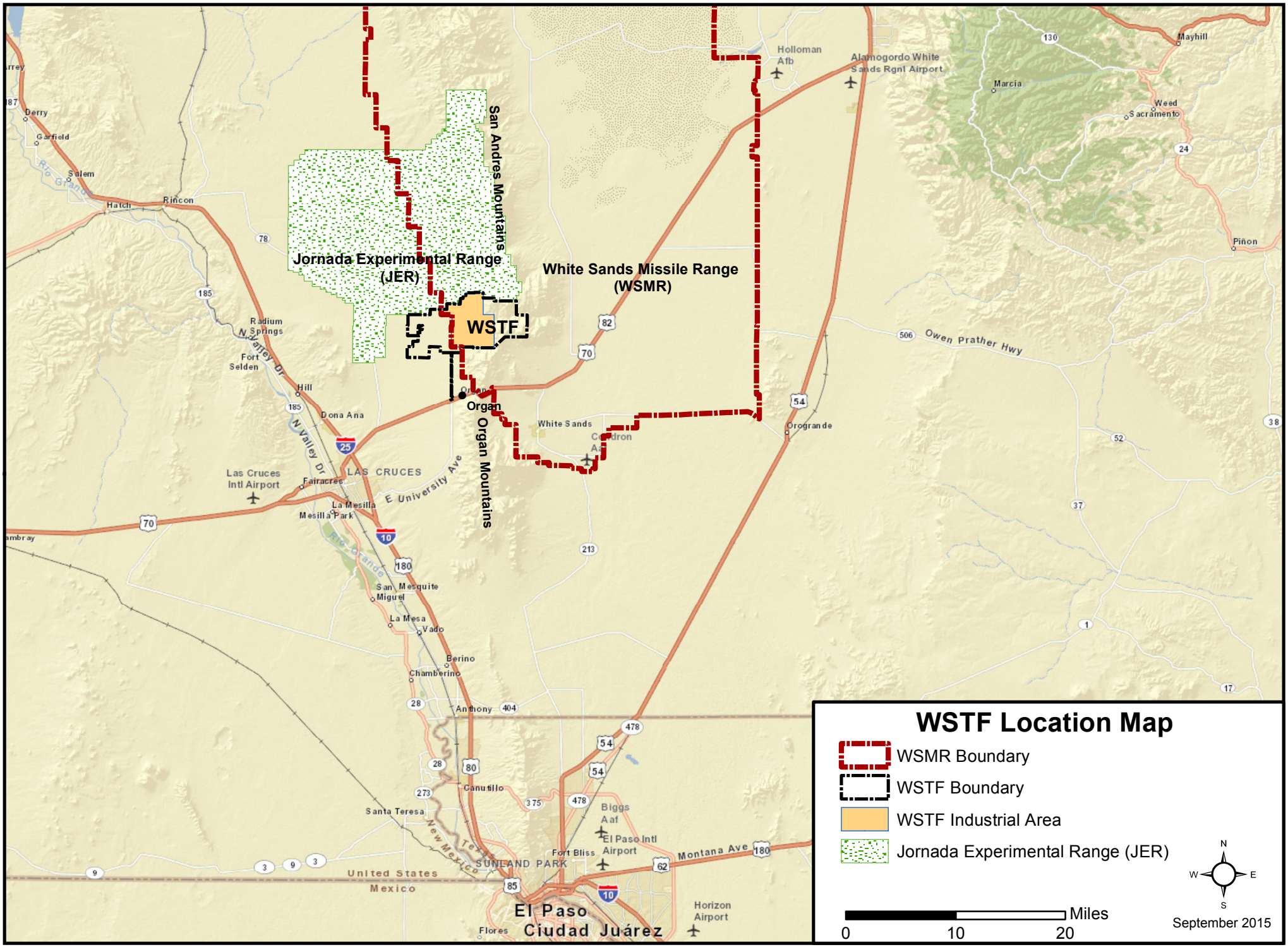
WSTF Location Map
WSMR Boundary
WSTF Boundary
WSTF Industrial Area
Jornada Experimental Range (JER)
Miles
0
10
20
N
S
E
W
September 2015
Jornada Experimental Range (JER)
San Andres Mountains
White Sands Missile Range (WSMR)
WSTF
Organ
Organ Mountains
Holloman Afb
Alamogordo White Sands Rgnl Airport
Mayhill
Marcia
Weed
Sacramento
Piñon
Owen Prather Hwy
Orogrande
White Sands
Cloudcroft
Radium Springs
Fort Selden
Hill
Dona Ana
N Valley Dr
LAS CRUCES
E University Ave
Las Cruces Intl Airport
Fairacres
La Mesilla
Mesilla Park
Rio Grande
San Miguel
Mesquite
La Mesa
Vado
Berino
Chamberino
Anthony
Canutillo
Santa Teresa
New Mexico
Texas
SUNLAND PARK
Fort Bliss
Biggs Aaf
El Paso Intl Airport
Montana Ave
United States
Mexico
El Paso
Ciudad Juárez
Flores
Horizon Airport
Derry
Garfield
Salem
Hatch
Rincon

Figure 1.2 WSTF Site Features with NDMA and TCE Groundwater Contaminant Plumes

(SEE NEXT PAGE)

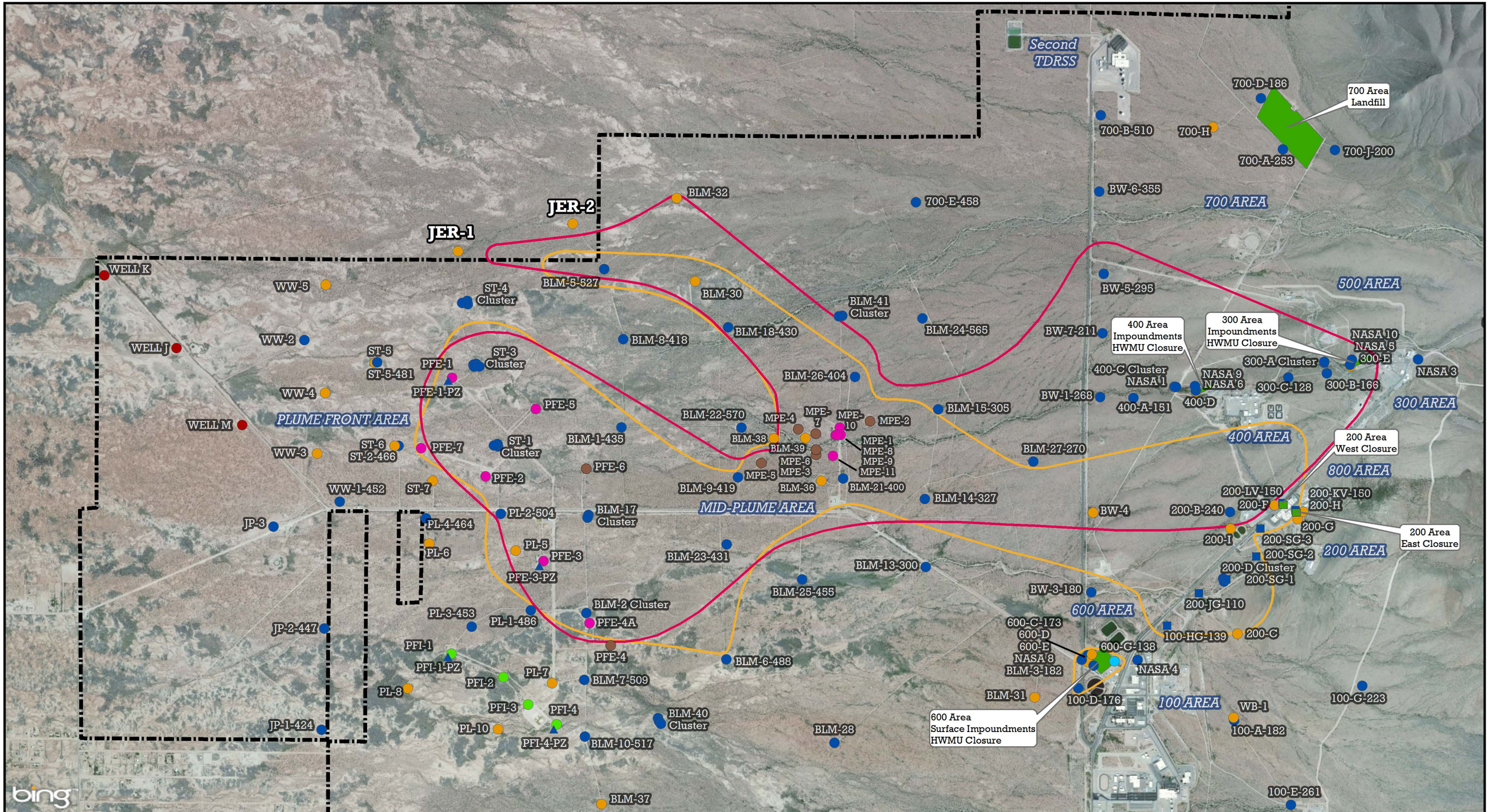

NASA-WSTF Site Features with NDMA and TCE Groundwater Contaminant Plumes

- NDMA Equiconcentration Line (4.2 ppt)
- TCE Equiconcentration Line (2.6 ppb)
- RCRA Post Closure Care
- Conventional Well
- Perched Well
- Multiport Well
- MSVGM Well
- Extraction Well
- Injection Well
- Piezometer
- Exploration Well
- Production Well
- WSTF Boundary

0 0.25 0.5 1 Mile

N W E S

September 2015

Figure 1.3 JER Monitoring Well Locations

(SEE NEXT PAGE)

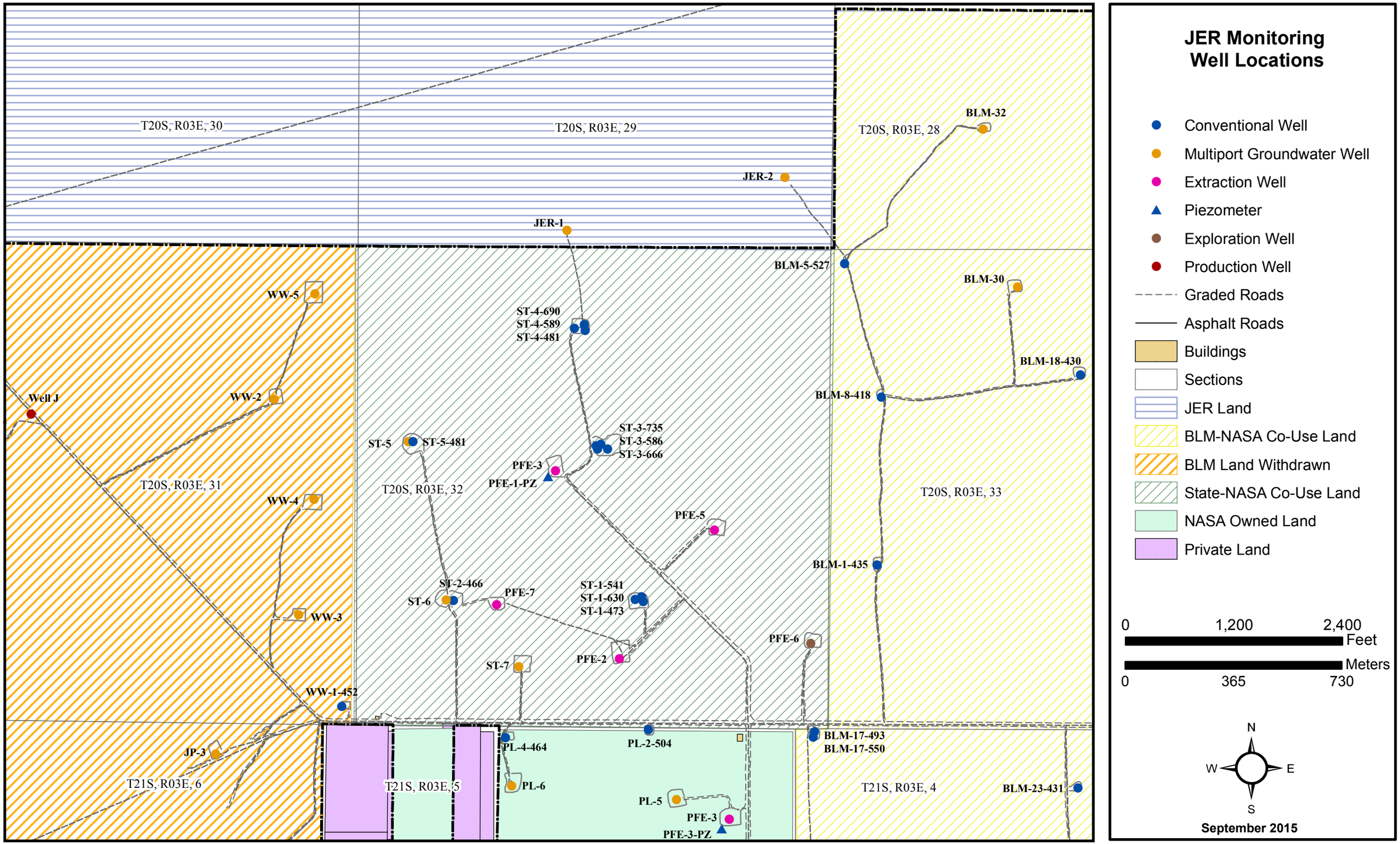
JER Monitoring Well Locations
Conventional Well
Multiport Groundwater Well
Extraction Well
Piezometer
Exploration Well
Production Well
Graded Roads
Asphalt Roads
Buildings
Sections
JER Land
BLM-NASA Co-Use Land
BLM Land Withdrawn
State-NASA Co-Use Land
NASA Owned Land
Private Land
0
1,200
2,400
Feet
Meters
0
365
730
N
W
E
S
September 2015
T20S, R03E, 30
T20S, R03E, 29
T20S, R03E, 28
T20S, R03E, 31
T20S, R03E, 32
T20S, R03E, 33
T21S, R03E, 6
T21S, R03E, 5
T21S, R03E, 4
BLM-32
JER-2
JER-1
BLM-5-527
BLM-30
BLM-18-430
BLM-8-418
WW-5
WW-2
Well J
ST-4-690
ST-4-589
ST-4-481
ST-5
ST-5-481
ST-3-735
ST-3-586
ST-3-666
PFE-3
PFE-1-PZ
WW-4
PFE-5
BLM-1-435
ST-2-466
ST-6
PFE-7
ST-1-541
ST-1-630
ST-1-473
WW-3
PFE-6
ST-7
PFE-2
WW-1-452
JP-3
PL-4-464
PL-2-504
BLM-17-493
BLM-17-550
PL-6
PL-5
PFE-3
PFE-3-PZ
BLM-23-431

Tables

Table 2.1 Historical Freon 113 Detections in JER-1 and JER-2

Well ID	Event Date	Result	Units	PQL	MDL	QA Flag
JER-2-587	20-Apr-04	1.4	µg/L	0.5	0.083	
JER-2-587	20-Apr-04	0.53	µg/L	0.5	0.083	
JER-1-688	5-May-04	2.0	µg/L	0.5	0.083	
JER-1-688	23-Sep-08	0.23	µg/L	1.0	0.29	J

QA – Quality Assurance

J – The result is an estimate value less than the quantitation limit, but greater than or equal to the detection limit.

MDL – Method detection limit.

PQL – Practical quantitation limit.

Table 3.1 JER-1 and JER-2 Sampling and Pumping Port Information

Well ID	Westbay Zone	Port Type	Depth of Port	Designation
JER-1	JER-1-488	Sampling	488	JER-1-488
JER-1	JER-1-493	Pumping	492.9	JER-1-488
JER-1	JER-1-568	Sampling	568.3	JER-1-568
JER-1	JER-1-573	Pumping	573.2	JER-1-568
JER-1	JER-1-688	Sampling	688	JER-1-688
JER-1	JER-1-693	Pumping	692.9	JER-1-688
JER-2	JER-2-508	Sampling	508.2	JER-2-508
JER-2	JER-2-513	Pumping	513.2	JER-2-508
JER-2	JER-2-587	Sampling	586.9	JER-2-587
JER-2	JER-2-592	Pumping	591.7	JER-2-587
JER-2	JER-2-689	Sampling	688.5	JER-2-589
JER-2	JER-2-693	Pumping	693.4	JER-2-589

Table 3.2 Purge and Sample Requirements for Pumping Ports in JER-1 and JER-2

Sample Set	Purge Requirement	Rationale for Sample Collection	Purge Volume (gallons)	Cumulative Purge Volume (gallons)
1	None	Samples collected with Westbay equipment to provide project baseline for comparison	0	0
2	Volume of the Westbay casing between the pumping port and the top of water	Provide “no purge” samples collected with conventional purge/sampling equipment; represent groundwater immediately outside the Westbay casing in the conventional outer casing	8-10	8-10
3	Volume of the screened interval of the outer conventional casing	Represent groundwater outside the conventional outer casing within the borehole	18	26-28
4	Volume of the borehole surrounding the screened interval	Represent groundwater immediately outside the conventional outer casing	44	70-72
5	Two additional borehole volumes	Represent groundwater conditions within the aquifer beyond the immediate influence of the well and borehole	124	194-196
6	Two additional borehole volumes	Represent groundwater conditions well beyond the well and borehole	124	318-320

Table 4.1 Groundwater Indicator Parameters Collected at JER-1 and JER-2

JER-1-688		Measurement Date					
Parameter	**Units**	10/01/14	10/02/14	10/02/14	10/02/14	10/03/14	10/06/14
Cumulative Volume Purged	Gallons	WB[1]	8	26	70	194	318
pH	pH Units	8.3	NA	6.95	7.23	7.50	7.80
Temperature	°C	23.8	NA	26.47	26.33	25.65	26.93
Conductivity	µS/cm	1171	NA	1029	1013	996	996
Turbidity	NTU	8.73	NA	2.00	2.69	1.20	1.08
JER-1-568		**Measurement Date**					
Parameter	**Units**	01/07/15	01/26/15	01/27/15	01/27/15	01/27/15	01/28/15
Cumulative Volume Purged	Gallons	WB[1]	8	26	70	194	318
pH	pH Units	8.53	7.17	7.20	7.43	7.49	7.54
Temperature	°C	21.5	24.1	22.78	24.54	25.46	24.8
Conductivity	µS/cm	1119	1035	1045	1043	1034	1036
Turbidity	NTU	1.47	1.04	0.75	0.64	0.72	0.43
JER-1-488		**Measurement Date**					
Parameter	**Units**	02/10/15	02/18/15	02/18/15	02/18/15	02/19/15	02/19/15
Cumulative Volume Purged	Gallons	WB[1]	8	26	70	194	318
pH	pH Units	7.65	8.54	8.6	8.68	8.70	8.68
Temperature	°C	23.9	22.75	23.79	24.18	24.23	24.9
Conductivity	µS/cm	1097	950	952	953	963	948
Turbidity	NTU	0.66	0.62	0.36	0.61	0.40	0.38
JER-2-689		**Measurement Date**					
Parameter	**Units**	3/10/15	04/18/15	04/18/15	04/21/15	04/22/15	04/23/15
Cumulative Volume Purged	Gallons	WB[1]	10	28	72	196	320
pH	pH Units	8.71	8.01	8.00	7.65	7.54	7.14
Temperature	°C	23.9	22.55	23.83	21.39	22.96	25.61
Conductivity	µS/cm	1081	986	986	982	991	998
Turbidity	NTU	4.14	1.68	2.81	NA	1.57	1.80

Table 4.1 Groundwater Indicator Parameters Collected at JER-1 and JER-2

JER-2-587		Measurement Date					
Parameter	**Units**	3/16/15	04/24/15	04/24/15	04/24/15	04/24/15	04/24/15
Cumulative Volume Purged	Gallons	WB[1]	10	28	72	196	320
pH	pH Units	8.09	7.67	7.67	7.54	7.69	7.69
Temperature	°C	22.7	21	21.03	22.54	24.35	24.53
Conductivity	µS/cm	1049	999	1004	987	984	995
Turbidity	NTU	0.89	2.84	1.89	1.02	1.69	1.76
JER-2-508		**Measurement Date**					
Parameter	**Units**	03/17/15	04/28/15	04/28/15	04/29/15	05/07/15	05/07/15
Cumulative Volume Purged	Gallons	WB[1]	10	28	72	196	320
pH	pH Units	8.14	7.89	7.70	7.91	7.40	7.64
Temperature	°C	23.2	22.44	23.81	23.31	24.2	24.25
Conductivity	µS/cm	1006	965	969	957	867	903
Turbidity	NTU	1.06	0.73	0.17	0.68	0.50	0.42

[1] – Indicates that parameters were measured prior to sample collection with Westbay sampling equipment. No purging was performed.

NA – Indicates that parameters were not measured.

Table 4.2 Concentrations of NDMA, TCE, and Freon 113 at JER-1 and JER-2

JER-1-688		Sample Date					
Analyte	**Units**	10/01/14	10/02/14	10/02/14	10/02/14	10/03/14	10/06/14
Cumulative Volume Purged	Gallons	WB[1]	8	26	70	194	318
NDMA	ng/L	1.9	NA	2.0	0.91	0.51	0.7
TCE	µg/L	ND	NA	1.5	1.4	1.0	0.96
Freon 113	µg/L	ND	NA	0.44 J	0.39 J	0.33 J	0.33 J
JER-1-568		**Sample Date**					
Parameter	**Units**	01/07/15	01/26/15	01/27/15	01/27/15	01/27/15	01/28/15
Cumulative Volume Purged	Gallons	WB[1]	8	26	70	194	318
NDMA	ng/L	0.54 EB	0.37 J	0.44 J	0.36 J	ND	ND
TCE	µg/L	ND	1.9	1.5	0.94 J	0.66 J	0.51 J
Freon 113	µg/L	ND	ND	ND	ND	ND	ND
JER-1-488		**Sample Date**					
Parameter	**Units**	02/10/15	02/18/15	02/18/15	02/18/15	02/19/15	02/19/15
Cumulative Volume Purged	Gallons	WB[1]	8	26	70	194	318
NDMA	ng/L	0.72	ND	ND	ND	ND	ND
TCE	µg/L	ND	1.4	0.94 J	0.72 J	0.43 J	0.42 J
Freon 113	µg/L	ND	0.35 J	ND	ND	ND	ND
JER-2-689		**Sample Date**					
Parameter	**Units**	3/10/15	04/18/15	04/18/15	04/21/15	04/22/15	04/23/15
Cumulative Volume Purged	Gallons	WB[1]	10	28	72	196	320
NDMA	ng/L	0.54	0.43 J TB	ND	4.9	12	15
TCE	µg/L	ND	2.4	1.2	3.2	1	0.41 J
Freon 113	µg/L	ND	0.57 J	0.34 J	0.61 J	ND	ND
JER-2-587		**Sample Date**					
Parameter	**Units**	3/16/15	04/24/15	04/24/15	04/24/15	04/24/15	04/24/15
Cumulative Volume Purged	Gallons	WB[1]	10	28	72	196	320
NDMA	ng/L	0.65	44	7.2	2.2	0.58	ND
TCE	µg/L	ND	0.99 J	0.57 J	0.3 J	0.22 J	ND
Freon 113	µg/L	ND	ND	ND	ND	ND	ND

Table 4.2 Concentrations of NDMA, TCE, and Freon 113 at JER-1 and JER-2

JER-2-508		Sample Date					
Parameter	**Units**	03/17/15	04/28/15	04/28/15	04/29/15	05/07/15	05/07/15
Cumulative Volume Purged	Gallons	WB[1]	10	28	72	196	320
NDMA	ng/L	ND	ND	ND	ND	ND	ND
TCE	µg/L	ND	0.98 J	0.51 J	0.71 J	0.43 J	0.35 J
Freon 113	µg/L	ND	0.51 J	ND	0.31 J	ND	ND

[1] – Indicates that parameters were measured prior to sample collection with Westbay sampling equipment. No purging was performed.

NA – Indicates that samples were not collected for this analysis.

ND – Indicates that the analyte was not detected.

J – Indicates that the analyte was detected above the method detection limit but below the practical quantiation limit.

EB – Indicates that the analyte was detected in the equipment blank above the method detection limit.

TB – Indicates that the analyte was detected in the trip blank above the method detection limit.

Table 6.1 Westbay Well Conversion Schedule

Westbay Well Identification	Expected Conversion Date
BLM-28	July 31, 2015[1, 2]
BLM-32	July 31, 2015[1]
WW-4	October 31, 2015
WW-5	October 31, 2015
BLM-37	October 31, 2016
ST-6	October 31, 2016
JER-1	October 31, 2016
JER-2	October 31, 2016
ST-7	October 31, 2016

[1] – Indicates that NMED approved extension of the due date for conversion of this well from November 30, 2014 to July 31, 2015 (NMED, 2015b).
[2] – Indicates that unforeseen complications with the procurement of the replacement sampling system have delayed conversion of the well. NMED has been informed of the status of this well in each NASA WSTF Monthly Environmental Activities Report.

Appendix A
Well Completion Diagrams for JER-1 and JER-2

WELL COMPLETION DIAGRAM

RETROFIT WESTBAY® MONITORING WELL

JSC - White Sands Test Facility
Las Cruces, New Mexico, USA

Location ID: **JER-1**

Site ID: **NASA-WSTF, Doña Ana County, NM**

Township and Range: **SE 1/4 SE 1/4 SW 1/4 Sec. 29, T20S, R3E**
NM State Plane Coordinates (NAD 83-meters): **170003.50N 461730.73E**
Elevation (Brass Cap): **1370.73 m AMSL**
Elevation (Top of Casing): **1371.24 m AMSL**
Drilling Contractor: **Stewart Brothers Drilling Company**
Driller: **C. Brunson; W. Brunson (Supervisor)**
Total Depth of Borehole (bgs): **753' (229.5 m)**
Borehole Diameter: **17.5" (0'-76'); 12.25" (76'-753')**
Depth to Bedrock (bgs): **560' (170.7 m); Rhyolite**
Depth to Groundwater: **429' (130.8 m) TOC (1/8/04)**
Total Depth Surface Casing (bgs): **76' (23.2 m)**
Diameter and Type Surface Casing: **13.5" ID; 14" OD Steel**
Date(s) Well Installed: **10/29/03 - 1/10/04**
Date(s) Well Developed: **CW = 12/1/03 - 12/8/03; WB = 4/5/04 - 4/20/04**

Field Representative(s): **Canavan, Giles, Hunnicutt-Mack, Pearson, Stepro**
Total Depth Well Casing(s) (bgs): **CW = 718.0' (218.8 m); WB = 713.0' (217.3 m)**
Type of Casing(s): **CW = CertainTeed SDR 17 PVC; WB = PVC**
Diameter Well Casing(s): **CW = 5.728" ID; 6.625" OD; WB = 2.25" ID; 2.9" OD**
Casing Schedule: **CW = Standard Dimension Ratio 17**
CW Screened Zone(s)(bgs): **483.1-493.1' (147.2-150.3 m); 563.0-573.0' (171.6-174.7 m); 682.9-692.9' (208.1-211.2 m)**
WB Sampling Zone(s)(bgs): **488' (149.37 m); 568.32' (173.79 m); 688.01' (210.17 m)**
WB Packer Zone(s)(bgs): **477.71-497.79' (146.25-152.34 m); 558.03-578.11' (170.63-176.77 m); 677.72-697.80' (207.07-213.15 m)**
Comments: **CW = Conventional Well WB = Westbay Well**
AMSL = Above Mean Sea Level bgs = below ground surface
TOC = Top of Casing Sampling zone = 209.81 m
CW casing was slotted in middle 10' of 20' blank casing

Casing Explanation:

- Surface Casing — **13.5" ID; 14" OD Steel**
- Conventional Casing — **6.625" OD CertainTeed PVC**
- Conventional Screen — **6.625" OD CertainTeed PVC 0.020"-slot**
- Conventional End Cap — **6.625" OD CertainTeed PVC**
- **Bolted Steel Centralizers**
- Water Table
- **2.25" ID MP55 Casing**
- **2.25" ID MP55 End Cap**
- Measurement Port (MP)
- MP with Filter Sock
- Mechanical Pumping Port (PP)
- Magnetic Collar
- Packer

Annular Materials Explanation:

- Cement
- Bentonite (Grout Well DF)
- Bentonite Seal
- 10/20 Sand/ Bentonite Mix
- Slough
- 1/8 Gravel
- 4/8 Sand
- 6/9 Sand
- 8/12 Sand
- 8/20 Sand
- 10/20 Sand
- 16/40 Sand
- 20/40 Sand
- 30/70 Sand

Feet/Meters

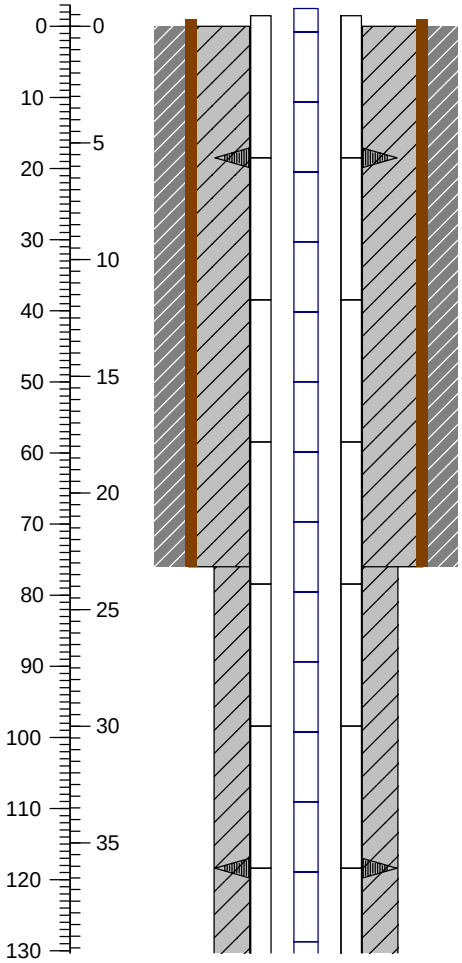

Well Descriptions
All depths listed are bgs (unless noted)

Westbay® Well Stick-Up = ~2.5' at installation (0.8 m); 0.52 m surveyed
Conventional Well Stick-Up = ~1.5' at installation (0.5 m)
Well completed with ~3' x ~3' cement pad, barrier posts, and locking steel well cap surrounding the casings above ground surface
Steel Centralizer Bolted on at Joint = 18.5' (5.6 m)

14" OD Steel Surface Casing Depth = 76' (23.2 m)

Steel Centralizer Bolted on at Joint = 118.4' (36.1 m)

Annular/Borehole Descriptions
All depths listed are bgs

Top of Bentonite Grout (Grout Well DF) = 0'

17 1/2" Diameter Borehole Cemented to 76' (23.2 m)

Casing Explanation:

- Surface Casing — **13.5" ID; 14" OD Steel**
- Conventional Casing — **6.625" OD CertainTeed PVC**
- Conventional Screen — **6.625" OD CertainTeed PVC 0.020"-slot**
- Conventional End Cap — **6.625" OD CertainTeed PVC**
- **Bolted Steel Centralizers**
- Water Table
- **2.25" ID MP55 Casing**
- **2.25" ID MP55 End Cap**
- Measurement Port (MP)
- MP with Filter Sock
- Mechanical Pumping Port (PP)
- Magnetic Collar
- Packer

Annular Materials Explanation:

- Cement
- Bentonite (Grout Well DF)
- Bentonite Seal
- 10/20 Sand/ Bentonite Mix
- Slough
- 1/8 Gravel
- 4/8 Sand
- 6/9 Sand
- 8/12 Sand
- 8/20 Sand
- 10/20 Sand
- 16/40 Sand
- 20/40 Sand
- 30/70 Sand

Feet/Meters

Well Descriptions
All depths listed are bgs (unless noted)

Annular/Borehole Descriptions
All depths listed are bgs

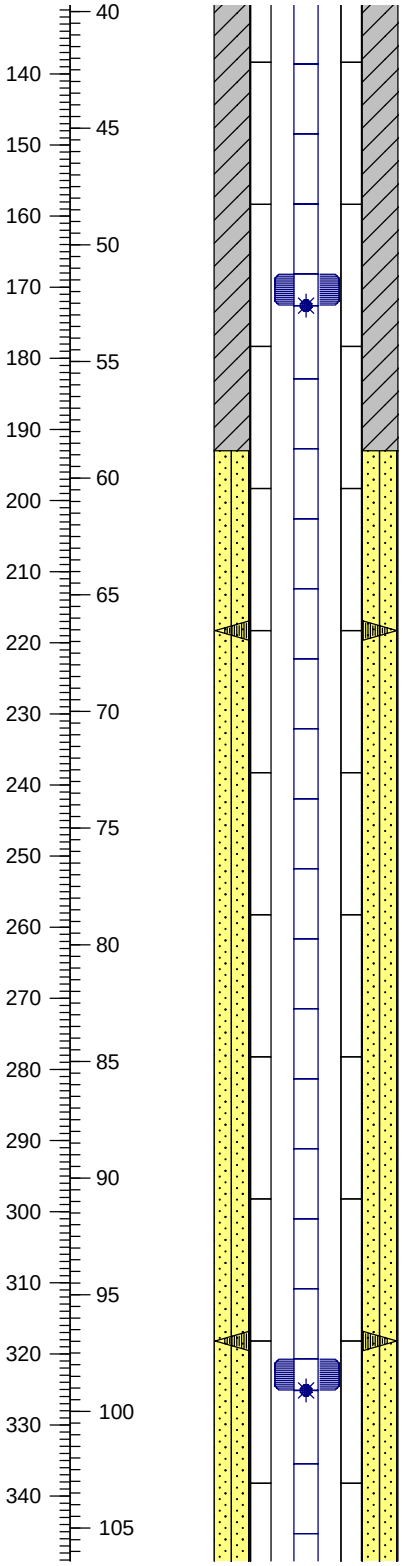

Stabilizing Packer Depth = 168.11'-172.58' (51.24-52.60 m)
MP Depth (with Filter Sock) = 172.58' (52.60 m)

Steel Centralizer Bolted on at Joint = 218.3' (66.5 m)

Steel Centralizer Bolted on at Joint = 318.2' (97.0 m)

Stabilizing Packer Depth = 320.67'-325.14' (97.74-99.10 m)
MP Depth (with Filter Sock) = 325.14' (99.10 m)

Top of 10/20 Sand/Bentonite Mix = 193' (58.8 m)

Casing Explanation:

- Surface Casing — **13.5" ID; 14" OD Steel**
- Conventional Casing — **6.625" OD CertainTeed PVC**
- Conventional Screen — **6.625" OD CertainTeed PVC 0.020"-slot**
- Conventional End Cap — **6.625" OD CertainTeed PVC**
- **Bolted Steel Centralizers**
- Water Table
- **2.25" ID MP55 Casing**
- **2.25" ID MP55 End Cap**
- Measurement Port (MP)
- MP with Filter Sock
- Mechanical Pumping Port (PP)
- Magnetic Collar
- Packer

Annular Materials Explanation:

- Cement
- Bentonite (Grout Well DF)
- Bentonite Seal
- 10/20 Sand/ Bentonite Mix
- Slough
- 1/8 Gravel
- 4/8 Sand
- 6/9 Sand
- 8/12 Sand
- 8/20 Sand
- 10/20 Sand
- 16/40 Sand
- 20/40 Sand
- 30/70 Sand

Feet/Meters

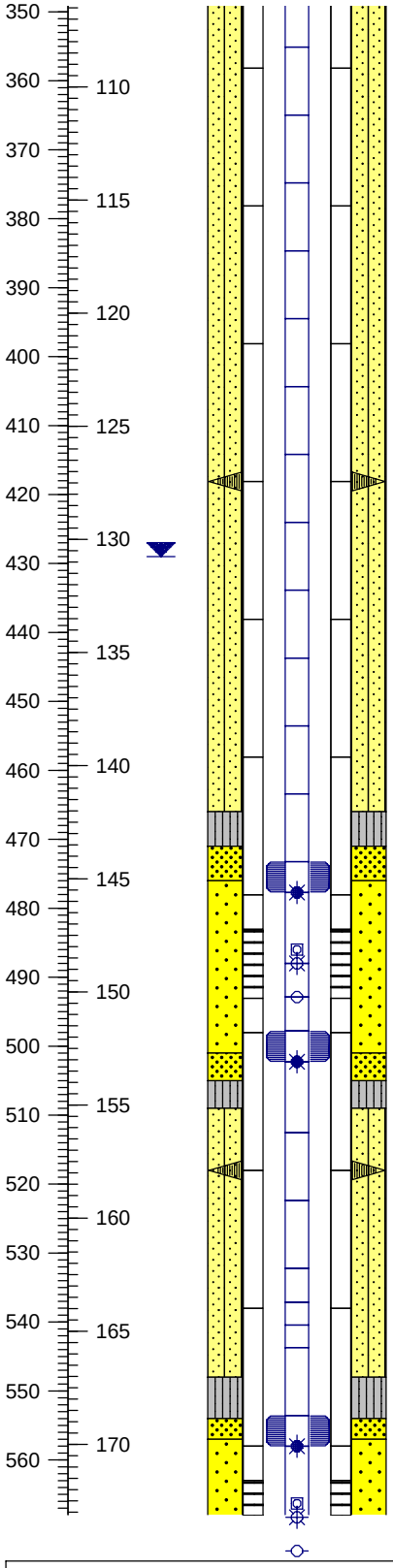

Well Descriptions
All depths listed are bgs (unless noted)

Steel Centralizer Bolted on at Joint = 418.1' (127.4 m)

Water Table = 429' (130.8 m)(TOC - Measured 1/8/04 in conventional casing before Westbay® Casing Installation)

NOTE: depth-o-port is the official depth in meters calculated from actual peizometric levels at the port.

Packer Depth = 473.24-477.71' (144.89-146.25 m)
MP Depth (with Filter Sock) = 477.71' (146.25 m)
Top of PVC 0.020"-Slot Screen = 483.1' (147.2 m)(Slotted in middle 10' of 20' joint)

Magnetic Collar Depth = 486.00' (148.76 m)
Sampling MP Depth = 488.00' (149.37 m)
PP Depth = 492.87' (150.86 m)
Bottom of PVC 0.020"-Slot Screen = 493.1' (150.3 m)

Packer Depth = 497.79-502.26' (152.34-153.70 m)
MP Depth (with Filter Sock) = 502.44' (153.70 m)

Steel Centralizer Bolted on at Joint = 518.0' (157.9 m)

Packer Depth = 553.56-558.03' (169.27-170.63 m)
MP Depth (with Filter Sock) = 558.03' (170.63 m)
Top of PVC 0.020"-Slot Screen = 563.0' (171.6 m)(Slotted in middle 10' of 20' joint)
Magnetic Collar Depth = 566.32' (173.18 m)

Annular/Borehole Descriptions
All depths listed are bgs

Top of Upper Bentonite Seal = 466' (142.0 m)
Top of Upper 30/70 Sand = 471' (143.6 m)
Top of 10/20 Sand = 476' (145.1 m)
Top of Lower 30/70 Sand = 501' (152.7 m)
Top of Lower Bentonite Seal = 504' (153.6 m)
Top of 10/20 Sand/Bentonite Mix = 509' (155.1 m)
Top of Upper Bentonite Seal = 548' (167.0 m)
Top of Upper 30/70 Sand = 554' (168.9 m)
Top of 10/20 Sand = 557' (169.8 m)
Volcanic Bedrock Depth = 560' (170.7 m)

Casing Explanation:

- Surface Casing — **13.5" ID; 14" OD Steel**
- Conventional Casing — **6.625" OD CertainTeed PVC**
- Conventional Screen — **6.625" OD CertainTeed PVC 0.020"-slot**
- Conventional End Cap — **6.625" OD CertainTeed PVC**
- **Bolted Steel Centralizers**
- Water Table
- **2.25" ID MP55 Casing**
- **2.25" ID MP55 End Cap**
- Measurement Port (MP)
- MP with Filter Sock
- Mechanical Pumping Port (PP)
- Magnetic Collar
- Packer

Annular Materials Explanation:

- Cement
- Bentonite (Grout Well DF)
- Bentonite Seal
- 10/20 Sand/ Bentonite Mix
- Slough
- 1/8 Gravel
- 4/8 Sand
- 6/9 Sand
- 8/12 Sand
- 8/20 Sand
- 10/20 Sand
- 16/40 Sand
- 20/40 Sand
- 30/70 Sand

Feet/Meters

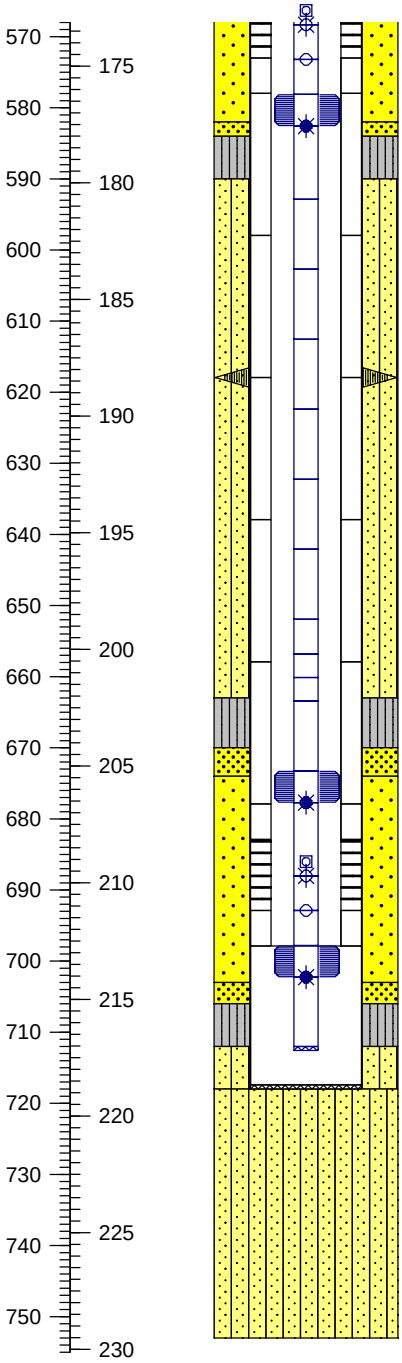

Well Descriptions
All depths listed are bgs (unless noted)

Sampling MP Depth = 568.32' (173.79 m)
PP Depth = 573.19' (175.28 m)
Bottom of PVC 0.020"-Slot Screen = 573.0' (174.7 m)

Packer Depth = 578.11-582.58' (176.77-178.14 m)
MP Depth (with Filter Sock) = 582.58' (178.14 m)

Steel Centralizer Bolted on at Joint = 617.9' (188.3 m)

Packer Depth = 673.25-677.72' (205.71-207.07 m)
MP Depth (with Filter Sock) = 677.72' (207.07 m)
Top of PVC 0.020"-Slot Screen = 682.9' (208.1 m)(Slotted in middle 10' of 20' joint)

Magnetic Collar Depth = 686.01' (209.56 m)
Sampling MP Depth = 688.01' (210.17 m)
PP Depth = 692.89' (211.66 m)
Bottom of PVC 0.020"-Slot Screen = 692.9' (211.2 m)

Packer Depth = 697.80-702.27' (213.15-214.51 m)
MP Depth (with Filter Sock) = 702.27' (214.51 m)

Westbay® MP 55 Casing TD = 712.97' (217.5 m)

Conventional 6.625" CertainTeed SDR 17 PVC Well TD = 718.0' (218.8 m)

Annular/Borehole Descriptions
All depths listed are bgs

Top of Lower 30/70 Sand = 582' (177.4 m)
Top of Lower Bentonite Seal = 584' (178.0 m)
Top of 10/20 Sand/Bentonite Mix = 590' (179.8 m)

Top of Upper Bentonite Seal = 663' (202.1 m)

Top of Upper 30/70 Sand = 670' (204.2 m)
Top of 10/20 Sand = 674' (205.4 m)

Top of Lower 30/70 Sand = 703' (214.3 m)
Top of Lower Bentonite Seal = 706' (215.2 m)
Top of 10/20 Sand/Bentonite Mix = 712' (217.0 m)

Top of Slough = 752' (229.2 m)(from Geophysical Log)
12 1/4" Borehole TD = 753' (229.5 m)

WELL COMPLETION DIAGRAM

RETROFIT WESTBAY® MONITORING WELL

JSC - White Sands Test Facility
Las Cruces, New Mexico, USA

Location ID: **JER-2**

Site ID: **NASA-WSTF, Doña Ana County, NM**

Township and Range: **NE 1/4 SE 1/4 SE 1/4 Sec. 29, T20S, R3E**
NM State Plane Coordinates (NAD 83-meters): **170181.35N 462465.97E**
Elevation (Brass Cap): **1385.75 m**
Elevation (Top of Casing): **1386.19 m AMSL**
Drilling Contractor: **Stewart Brothers Drilling Company**
Driller: **C. Brunson**
Total Depth of Borehole (bgs): **756' (230.4 m)**
Borehole Diameter: **17 1/2" (0'-70'); 12 1/4" (70'-756')**
Depth to Bedrock (bgs): **394' (120.1 m); Rhyolite**
Depth to Groundwater: **476.66' (145.29 m) TOC (1/11/04)**
Total Depth Surface Casing (bgs): **69' (21.0 m)**
Diameter and Type Surface Casing: **13 1/2" ID; 14" OD Steel**
Date(s) Well Installed: **10/16/03 - 1/14/04**
Date(s) Well Developed: **CW = 12/7/03-12/23/03; WB = 3/23/04-3/29/04**

Field Representative(s): **Canavan, Giles, Hunnicutt-Mack, Pearson, Stepro**
Total Depth Well Casing(s) (bgs): **CW = 718.5' (219.0 m); WB = 713.47' (217.47 m)**
Type of Casing(s): **CW = CertainTeed SDR 17 PVC; WB = PVC**
Diameter Well Casing(s): **CW = 5.728" ID; 6.625" OD; WB = 2.25" ID; 2.9" OD**
Casing Schedule: **CW = Standard Dimension Ratio 17**
CW Screened Zone(s)(bgs): **503.5-513.5' (153.5-156.5 m); 583.5-593.5' (177.8-180.9 m); and 683.4-693.4' (208.3-211.3 m)**
WB Sampling Zone(s)(bgs): **508.18' (155.55 m); 586.86' (179.49 m); 688.51' (210.39 m)**
WB Packer Zone(s)(bgs): **497.89-517.97' (152.41-158.53 m); 581.49-596.65'; (177.85-182.48 m); and 678.22-698.30' (207.27-213.35 m)**
Comments: **AMSL = Above Mean Sea Level**
CW = Conventional Well WB = Westbay Well
bgs = below ground surface TOC = Top of Casing
CW casing was slotted in middle 10' of 20' blank casing

Casing Explanation:

- Surface Casing **14" Steel**
- Conventional Casing **6.625" OD CertainTeed PVC**
- Conventional Screen **6.625" OD CertainTeed PVC 0.020"-slot**
- Conventional End Cap **6.625" OD CertainTeed PVC**
- **Bolted Steel Centralizers**
- Water Table
- **2.25" ID MP55 Casing**
- **2.25" ID MP55 End Cap**
- Measurement Port (MP)
- MP with Filter Sock
- Mechanical Pumping Port (PP)
- Magnetic Collar
- Packer

Annular Materials Explanation:

- Cement
- Bentonite (Grout Well DF)
- Bentonite Seal
- 10/20 Sand/ Bentonite Mix
- Slough
- 1/8 Gravel
- 4/8 Sand
- 6/9 Sand
- 8/12 Sand
- 8/20 Sand
- 10/20 Sand
- 16/40 Sand
- 20/40 Sand
- 30/70 Sand

Feet/Meters

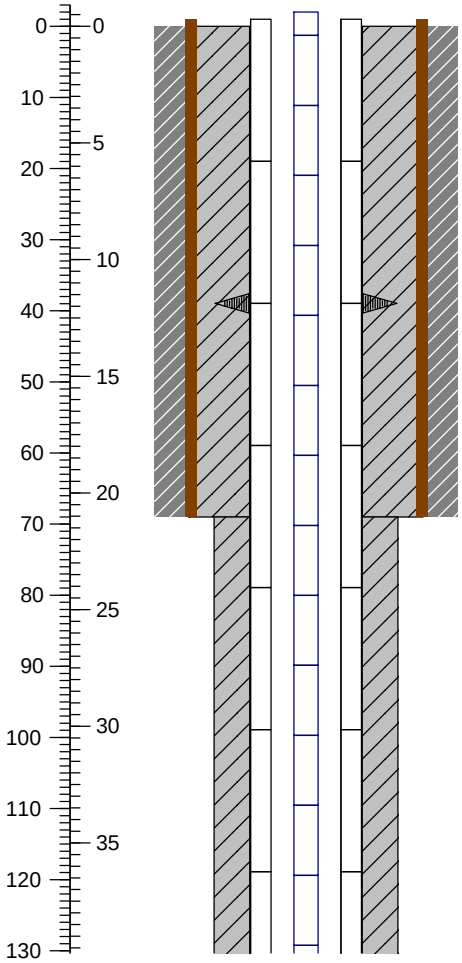

Well Descriptions
All depths listed are bgs (unless noted)

Westbay® Well Stick-Up = ~2' at installation (0.6 m); 0.45 m surveyed
Conventional Well Stick-Up = ~1' (0.3 m)
Well completed with ~3' x ~3' cement pad, barrier posts, and locking steel well cap surrounding the casings above ground surface

Steel Centralizer Bolted on at Joint = 38.96' (11.9 m)

14" OD Steel Surface Casing Depth = 69' (21.0 m)

Annular/Borehole Descriptions
All depths listed are bgs

Top of Bentonite Grout (Grout Well DF) = 0'

17 1/2" Diameter Borehole Cemented to 70' (21.3 m)

Casing Explanation:

- Surface Casing **14" Steel**
- Conventional Casing **6.625" OD CertainTeed PVC**
- Conventional Screen **6.625" OD CertainTeed PVC 0.020"-slot**
- Conventional End Cap **6.625" OD CertainTeed PVC**
- **Bolted Steel Centralizers**
- Water Table
- **2.25" ID MP55 Casing**
- **2.25" ID MP55 End Cap**
- Measurement Port (MP)
- MP with Filter Sock
- Mechanical Pumping Port (PP)
- Magnetic Collar
- Packer

Annular Materials Explanation:

- Cement
- Bentonite (Grout Well DF)
- Bentonite Seal
- 10/20 Sand/ Bentonite Mix
- Slough
- 1/8 Gravel
- 4/8 Sand
- 6/9 Sand
- 8/12 Sand
- 8/20 Sand
- 10/20 Sand
- 16/40 Sand
- 20/40 Sand
- 30/70 Sand

Feet/Meters

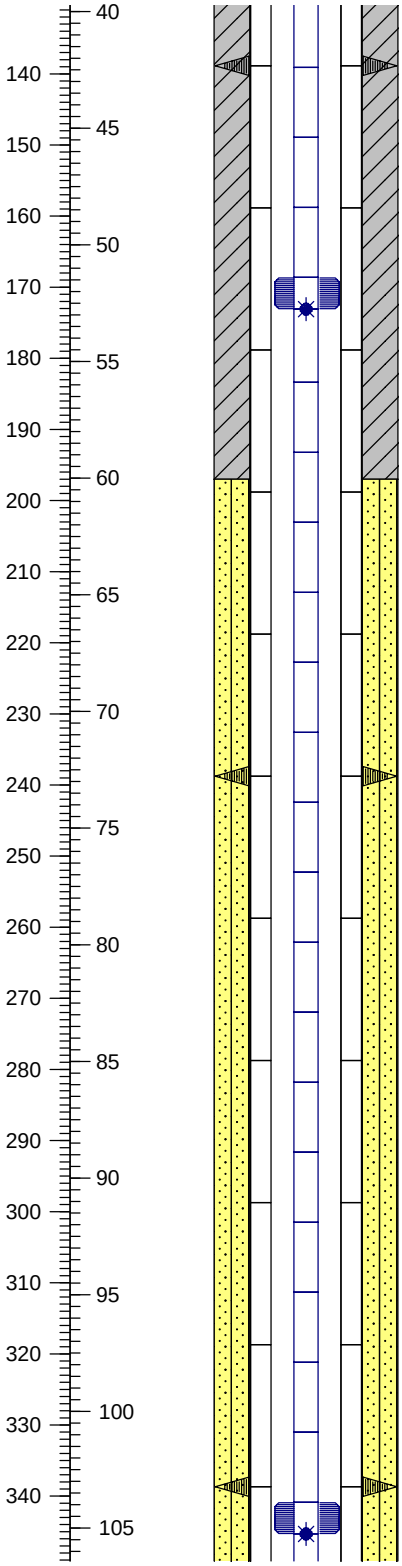

Well Descriptions
All depths listed are bgs (unless noted)

Steel Centralizer Bolted on at Joint = 138.86' (42.3 m)

Stabilizing Packer Depth = 168.61'-173.08' (51.4-52.8 m)
MP Depth (with Filter Sock) = 173.08' (52.8 m)

Steel Centralizer Bolted on at Joint = 238.76' (72.8 m)

Steel Centralizer Bolted on at Joint = 338.68' (103.2 m)
Stabilizing Packer Depth = 340.86'-345.33' (103.9-105.3 m)
MP Depth (with Filter Sock) = 345.33' (105.3 m)

Annular/Borehole Descriptions
All depths listed are bgs

Top of 10/20 Sand/Bentonite Mix = 197' (60.0 m)

Casing Explanation:

- Surface Casing — **14" Steel**
- Conventional Casing — **6.625" OD CertainTeed PVC**
- Conventional Screen — **6.625" OD CertainTeed PVC 0.020"-slot**
- Conventional End Cap — **6.625" OD CertainTeed PVC**
- **Bolted Steel Centralizers**
- Water Table
- **2.25" ID MP55 Casing**
- **2.25" ID MP55 End Cap**
- Measurement Port (MP)
- MP with Filter Sock
- Mechanical Pumping Port (PP)
- Magnetic Collar
- Packer

Annular Materials Explanation:

- Cement
- Bentonite (Grout Well DF)
- Bentonite Seal
- 10/20 Sand/ Bentonite Mix
- Slough
- 1/8 Gravel
- 4/8 Sand
- 6/9 Sand
- 8/12 Sand
- 8/20 Sand
- 10/20 Sand
- 16/40 Sand
- 20/40 Sand
- 30/70 Sand

Feet/Meters

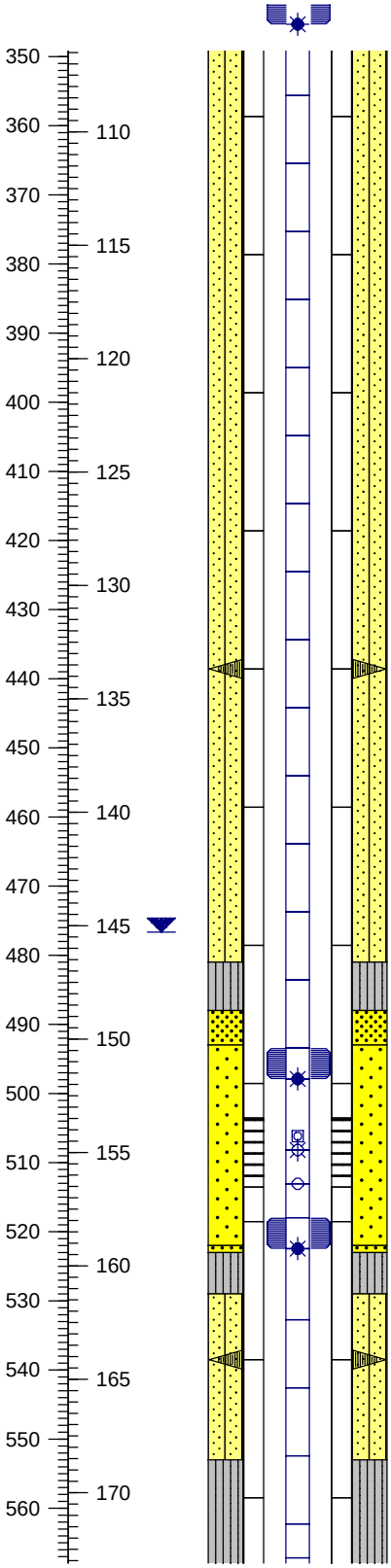

Well Descriptions
All depths listed are bgs (unless noted)

Steel Centralizer Bolted on at Joint = 438.59' (133.7 m)

NOTE: depth-o-port is the official depth in meters calculated from actual peizometric levels at the port.

Water Table = 476.66' (145.28 m) (TOC - Measured 1/11/04 in conventional casing before Westbay® Casing Installation)

Packer Depth = 493.42-497.89' (151.05-152.41 m)

MP Depth (with Filter Sock) = 497.89' (152.41 m)

Top of 6.625" OD CertainTeed SDR 17 PVC 0.020"-Slot Screen = 503.54' (153.5 m)(Slotted in middle 10' of 20' joint)

Magnetic Collar Depth = 506.18' (154.04 m)

Sampling MP Depth = 508.18' (155.55 m)

PP Depth = 513.16' (157.04 m)

Bottom of 6.625" OD CertainTeed SDR 17 PVC 0.020"-Slot Screen = 513.54' (156.5 m)

Packer Depth = 517.97-522.44' (158.53-159.89 m)

MP Depth (with Filter Sock) = 522.44' (159.89 m)

Steel Centralizer Bolted on at Joint = 538.50' (164.1 m)

Annular/Borehole Descriptions
All depths listed are bgs

Volcanic Bedrock Depth = 394' (120.1 m)

Top of Upper Bentonite Seal = 481' (146.6 m)

Top of Upper 30/70 Sand = 488' (148.7 m)

Top of 10/20 Sand = 493' (150.3 m)

Top of Lower 30/70 Sand = 522' (159.1 m)

Top of Lower Bentonite Seal = 523' (159.4 m)

Top of 10/20 Sand/Bentonite Mix = 529' (161.2 m)

Top of Upper Bentonite Seal = 553' (168.6 m)

Top of Upper 30/70 Sand = 569'

Casing Explanation:

- Surface Casing **14" Steel**
- Conventional Casing **6.625" OD CertainTeed PVC**
- Conventional Screen **6.625" OD CertainTeed PVC 0.020"-slot**
- Conventional End Cap **6.625" OD CertainTeed PVC**
- **Bolted Steel Centralizers**
- Water Table
- **2.25" ID MP55 Casing**
- **2.25" ID MP55 End Cap**
- Measurement Port (MP)
- MP with Filter Sock
- Mechanical Pumping Port (PP)
- Magnetic Collar
- Packer

Annular Materials Explanation:

- Cement
- Bentonite (Grout Well DF)
- Bentonite Seal
- 10/20 Sand/ Bentonite Mix
- Slough
- 1/8 Gravel
- 4/8 Sand
- 6/9 Sand
- 8/12 Sand
- 8/20 Sand
- 10/20 Sand
- 16/40 Sand
- 20/40 Sand
- 30/70 Sand

Feet/Meters

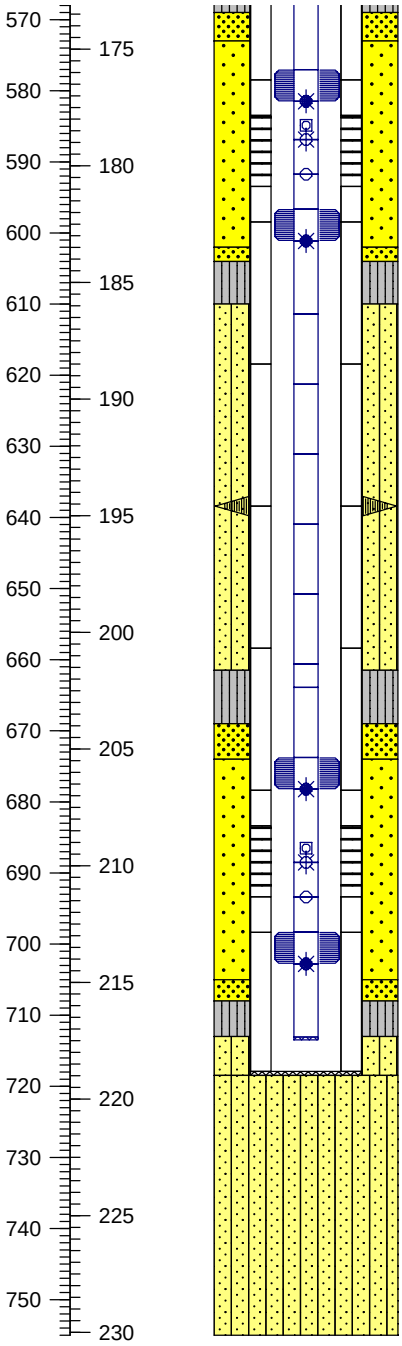

Well Descriptions
All depths listed are bgs (unless noted)

Packer Depth = 577.02-581.49' (176.49-177.85 m)
MP Depth (with Filter Sock) = 581.49' (177.85 m)
Top of 6.625" OD CertainTeed SDR 17 PVC 0.020"-Slot Screen = 583.46' (177.8 m)(Slotted in middle 10' of 20' joint)
Magnetic Collar Depth = 584.86' (178.88 m)
Sampling MP Depth = 586.86' (179.49 m)
PP Depth = 591.74' (180.98 m)
Bottom of 6.625" OD CertainTeed SDR 17 PVC 0.020"-Slot Screen = 593.46' (180.9 m)
Packer Depth = 596.65-601.12' (182.48-183.84 m)
MP Depth (with Filter Sock) = 601.12' (183.84 m)

Steel Centralizer Bolted on at Joint = 638.40' (194.6 m)

Packer Depth = 673.75-678.22' (205.91-207.27 m)
MP Depth (with Filter Sock) = 678.22' (207.27 m)
Top of 6.625" OD CertainTeed SDR 17 PVC 0.020"-Slot Screen = 683.36' (208.3 m)(Slotted in middle 10' of 20' joint)
Magnetic Collar Depth = 686.51' (209.78 m)
Sampling MP Depth = 688.51' (210.39 m)
PP Depth = 693.39' (211.88 m)
Bottom of 6.625" OD CertainTeed SDR 17 PVC 0.020"-Slot Screen = 693.36' (211.3 m)
Packer Depth = 698.30-702.77' (213.35-214.71 m)
MP Depth (with Filter Sock) = 702.77' (214.71 m)

Westbay® MP 55 Casing TD = 713.47' (217.5 m)

Conventional 6.625" CertainTeed SDR 17 PVC Well TD = 718.46' (219.0 m)

Annular/Borehole Descriptions
All depths listed are bgs

(173.4 m)
Top of 10/20 Sand = 573' (174.7 m)

Top of Lower 30/70 Sand = 602' (183.5 m)
Top of Lower Bentonite Seal = 604' (184.1 m)
Top of 10/20 Sand/Bentonite Mix = 610' (185.9 m)

Top of Upper Bentonite Seal = 661.5' (201.6 m)
Top of Upper 30/70 Sand = 669' (203.9 m)
Top of 10/20 Sand = 674' (205.4 m)

Top of Lower 30/70 Sand = 705' (214.9 m)
Top of Lower Bentonite Seal = 708' (215.8 m)
Top of 10/20 Sand/Bentonite Mix = 713' (217.3 m)

Top of Slough = 750' (228.6 m)(from Geophysical Log)

Appendix B
Field Logbook Entries

Project JER-1-688

Continues from Page 69

Notebook No. MISC. # 22

T. Kordy & T. Torrez present. Weather is clear and cool. Samples will be taken with 2 steamed cleaned, triple rinse sample tubes. Probe # 2213. Generator in use.

30 min EB Carboy

Sample #	Analysis	Preserv	Cont.	Lot #	Lab
141001 0815	8260B	Ice, HCL	(3) 40 ml Vial	4002003	ALS
— 0816	LL NDMA	Ice	(1) 1 LT Amber	0105801Z	SRI

Parameter	
Time	141001 0845
pH	8.30
Temp	25.8°c
Cond	1171
TURB	8.73 NTU's
pH pre cal	7.13 - 9.95 (13.3°c)
pH post cal	7.15 - 9.96
DTW	448.10

Meter	
pH/Cond	53
TURB	1
" std	6.48
" Rdg	6.60
" Lot #	3323
" Exp	10/29/14

Samples

Sample #	Analysis	Preserv	Cont	Lot #	Lab
141001 0910	8260B	Ice, HCL	(3) 40 ml Vial	4002003	ALS
— 0911	LL NDMA	Ice	(1) 1 LT Amber	0105801Z	SRI
— 0912	TOC	Ice, HCL	(2) 40 ml Amber	408600 41	HALL
— 0913	TDS	Ice	(1) 250 ml poly	112612-200	ALS
— 0914	Total Metals	Ice, HNO3	(1) 500 ml poly	10013-2MAU	ALS
— 0935	NO2/NO3/ASN	Ice, H2SO4	(1) 250 ml poly	112612-200	ALS

Run	1)	2)	3)
	118.93	118.80	118.94
	118.22	118.19	118.17
	118.18	118.19	118.15
	118.21	118.18	118.22

Continued on Page 71

Read and Understood By

T. Kordy — Signed — 10-1-14 Date

D. Wilcox — Signed — 10/31/14 Date

T. Kondy + T. Torre present. Weather is warm and clear. 18 gallons will be purged using the bennett pump. Water will flow thru a flow cell. Parameters will be taken from the flow cell. Samples taken from discharge tube from bennett pump. purge rate 1 gpm.

Field Blanks Cooler

Sample #	Analysis	Preserv	cont.	Lot #	Lab
14/1002 1048	8260 B	Ice, HCL	(3) 40 ml Vial	4002003	ALS
— 1050	LLNDMA	Ice	(1) 1 LT Amber	0105801Z	SRL

Initial Parameters

Time - 14/1002 1030
pH - 6.95
Temp - 26.47 C
cond - 1.029 mg/cm
Turb - 2.00 NTU
~~[illegible]~~ ORP - —
~~[illegible]~~ DO - 2.56 mg/L

Meter #
Turb - 1
" Std - 6.62
" Rds - 6.62
" Lot # A 3323
" Exp - 10/29/14

Calibrated Flow cell on 10-1-14.
~~cond - 1~~ TT
~~pH~~ TT
pH ~~adj~~ cal to 6.38
Cond 1428 µs/cm

Samples 18 gal

Sample #	Analysis	Preserv	cont.	Lot #	Lab
14/1002 1040	8260 B	Ice, HCL	(3) 40 ml Vial	4002003	ALS
— 1041	LLNDMA	Ice	(1) 1 LT Amber	0158401Z	SRL
— 1042	TOC	Ice, HCL	(2) 40 ml Amber Vial	4086004	HAL
— 1043	TDS	Ice	(1) 250 ml poly	112612-200	ALS
— 1044	Total Metals	Ice, HNO_3	(1) 500 ml poly	100713-2400	ALS
— 1045	NO_2/NO_3 as N	Ice, H_2SO_4	(1) 250 ml poly	112612-200	ALS
~~[illegible]~~					

After samples are taken we will pump 44 gallons and then sample. purge rate 1 gal a min.

Continued on Page 72

Read and Understood By

Signed: [signature] Date: 10-2-14 Signed: [signature] Date: 10/31/14

Project DEX-1-688 Notebook No. MISC # 22

Continues from Page 71

purge START 1322 hr.

Samples (44 gal)

Sample #	Analysis	Preserv	Cont.	Lot #	Lab
41002 1406	8260B	Ice, HCL	(3) 40ml Vial	4002003	ALS
— 1407	2LNDMA	Ice	(1) 1 LT Amber	058012	SRI
— 1408	TOC	Ice, HCL	(2) 40ml Amber Vial	4086004	HALL
— 1409	TDS	Ice	(1) 250 ml poly	112612-200	ALS
— 1410	Total Metals	Ice, HNO3	(1) 500 ml poly	100713-2AAU	ALS
— 1411	NO2/NO3 as N	Ice, H2SO4	(1) 250 ml poly	112612-200	ALS

Parameters FOR 44 gal

Time - 41002 1405
pH - 7.23
Cond - 1.013 mS/cm
Temp - 26.33 °C
ORP - 269 mV
DO - 1.66 mg/L
ORP - -42

Parameters (124 gal)

Time 41003 0950
pH - 7.50
Cond - 0.996 mS/cm
Temp - 25.65 °C
ORP - 1.20 mV
DO - 27.7 %
ORP - -25 mV

START purge at 0750 hr.

Samples 124 gal 1st

Sample #	Analysis	Preserv	Cont.	Lot #	Lab
41003 0954	8260B	Ice, HCL	(3) 40 ml Vial	4002003	ALS
— 0955	LLNDMA	Ice	(1) 1 LT Amber	058012	SRI
— 0956	TOC	Ice, HCL	(2) 40 ml Amber Vial	4086004	Hall
— 0957	TDS	Ice	(1) 250 ml poly	112612-200	ALS
— 0958	Total Metals	Ice, HNO3	(1) 500 ml poly	100713-2AAU	ALS
— 0959	NO2/NO3 as N	Ice, H2SO4	(1) 250 ml poly	112612-200	ALS

Continued on Page 73

Read and Understood By

Signed 10-3-14 Date

Signed 10/31/14 Date

Purge start 1230

Parameters

Time 141006 1434 DO 2.68 mg/L
ph 7.80 ORP -50
Temp 26.93
Cond 0.956 mS/cm
Turb 1.08
~~ph pre~~ #
~~ph post~~ #

Samples (124 gallon) (2nd)

Sample Time		Analysis	Preserv.	Lot#	Lab
141006	1435	8260B	ice/HCl	4002003	ALS
—	1436	CLNOM	ice	058012	SRJ
—	1437	TOC	ice/HCl	4086004	Hall
—	1438	TDS	ice	112612-2EET	ALS
—	1439	Total metals	ice/HNO_3	106713-2AAu	"
—	1440	NO_2/NO_3 ASN	ice/H_2SO_4	112612-2Au	"

Continued on Page NA

Read and Understood By

T. [illegible] — Signed — 10-3-14 — Date
D Wilk — Signed — 10/31/14 — Date

Project JER-1-568 WJI ENV-0020 Notebook No. Misc. #22

Continues from Page

T. Kondy & C. Del Ferraro present. Weather is clear & cold. This zone will be sampled using 2 steam cleaned & triple rinsed stainless steel sample tubes. Gen. in use. Probe #2167. Surface checks performed on probe prior to sampling. NDMA Evaluation.

30 Min. Equipment Blanks - Carboy G5

Sample	Analysis	Preservative	Container	Lot	Lab
150107 1100	VOA by 8260B	ice/HCL	(3) 40ml vials	4002003	ALS
——— 1101	Low Level NDMA	ice	(1) 1L Amber	0105801Z	SRI

Parameters	Meter ID	Buffers	Lot	Exp
Time - 150107 1325	pH/cond - 56	7	132163	4/15
pH - 8.53	Turb - 4	10	138049	12/15
Temp - 21.5°C	" std - ~~50.0 NTU's~~ 52.5 NTU's cd			
Cond - 1119 us/cm	" rdg - 52.9 NTU's			
Turb - 1.47 NTU's	" lot - A4307			
pH pre - 7.31/10.16 (14.3°C)	" Exp - 1/30/15			
pH post - 7.28/10.18				
DTW - ~~452.10 ft.~~ cd 450.12 ft.				
Atmos - 12.68 psia				

Samples - Trip Blanks

Sample	Analysis	Preservative	Container	Lot	Lab
150107 0930	VOA by 8260B	ice/HCL	(3) 40ml vials	4002003	ALS
——— 0931	Low Level NDMA	ice	(1) 1L Amber	0105801Z	SRI

Samples

Sample	Analysis	Preservative	Container	Lot	Lab
150107 1350	VOA by 8260B	ice/HCL	(3) 40ml vials	4002003	ALS
——— 1351	Low Level NDMA	ice	(1) 1L Amber	0105801Z	SRI
——— 1352	TOC	ice/HCL	(2) 40ml vials	4002003	HEAL
——— 1353	TDS	ice	(1) 250ml poly	112612-2VV	ALS
——— 1415	Total Metals	ice/HNO_3	(1) 500ml poly	060914-2AAW	"
——— 1416	NO_2/NO_3 by N	ice/H_2SO_4	(1) 250ml poly	100614-2AAO	"

Runs 1) 67.63 66.21 2) 67.62 66.20 3) 67.63 66.21
66.24 67.57 66.22 67.50 66.25 67.56

Continued on Page

Read and Understood By

Craig Del Ferraro 1/7/15 Signed Date

Jon Munck 1-9-15 Signed Date

T. Kondy + ~~B. Williams~~ D. Halvorsen present. Weather is cool, cloudy and a slight rain. Well will be purged with Bennett pump. Sampled out of Teflon discharge tube. Parameters taken from flow cell.

Field Blank Carboy Temp G-1

Sample #	Analysis	Preserv	Cont	Lot #	Lab
1501261515	8260 B	Ice, HCL	(3) 40 ml Vial	400200 3	AL
— 1516	2L NDMA	Ice	(1) 1LT Amber	0105801 Z	SR

Parameters (8 gal)

Time 1501261500
pH - 7.17
cond (us/cm) - 1.035
Temp (°c) - 24.10
TURB (NTUs) - 1.04

Meter
TURB # 7
" std - 5.33
" Rds - 6.06
" Exp - 1-30-15

Flow Cell cals. on ~~1-12-15~~ 1-26-15

Samples 8 gal.

Sample #	Analysis	Preserv	Cont	Lot	Lab
1501261501	8260 B	Ice, HCL	(3) 40 ml Vial	400200 3	ALS
— 1502	2L NDMA	Ice	(1) 1LT Amber	0105801 Z	SRL
— 1503	TOC	Ice, HCL	(2) 40 ml Vial	400200 3	Heal
— 1504	TDS	Ice	(1) 250 ml poly	112612-2AAU	ALS
— 1505	Total Metals	Ice, HNO_3	(1) 500 ml poly	060914-2AAU	"
— 1506	NO_2/NO_3 by N	Ice, H_2SO_4	(1) 250 ml poly	100614-2AAU	"

Parameters (18 gal)

Time - 1501270825
pH - 7.20
Temp (°c) - 22.78
Cond (US/cm) - 1.045
TURB (NTUs) - 0.75

Meter #
TURB # 7
" std - 5.33
" Rds - 5.44
" Exp - 1-30-15

T. Kondy + D. Halvorsen present
1-27-15

Continued on Page 88

Read and Understood By

Tim Kondy — Signed — 1-27-15 — Date

D. Wiele — Signed — 2/10/15 — Date

Project JER-1-568 Notebook No. M16C #22

Continues from Page 87

Samples 18 gal

Sample #	Analysis	Preserv	Cont.	Lot #	Lab
150127 0830	8260 B	Ice, HCL	(3) 40 ml Vial	4002003	ALS
— 0831	2LNDMA	Ice	(1) 1LT Amber	0105801 Z	SRI
— 0832	TOC	Ice, HCL	(2) 40 ml Vial	4002003	Heal
— 0833	TDS	Ice	(1) 250 ml poly	112612-2AAW	ALS
— 0834	Total Metals	Ice, HNO_3	(1) 500 ml poly	060914-2AAW	"
— 0835	NO_2/NO_3 Syn	Ice, H_2SO_4	(1) 250 ml poly	100614-2AAO	"

Trip Blanks 1-27-15

Sample #	Analysis	Preserv	Cont.	Lot #	Lab
150127 0720	8260 B	Ice, HCL	(3) 40 ml Vial	4002003	ALS
— 0721	2LNDMA	Ice	(1) 1LT Amber	0105801 Z	SRI

Parameters 44 gal

Time - 150127 0915
pH - 7.43
Temp (°C) - 24.54
Cond (uS/cm) - 1.043
TURB (NTU's) - 0.64

Samples 44 gal

Sample #	Analysis	Preserv	Cont.	Lot #	Lab
150127 0920	8260 B	Ice, HCL	(3) 40 ml Vial	4002003	ALS
— 0922	2LNDMA	Ice	(1) 1LT Amber	0105801 Z	SRI
— 0924	TOC	Ice, HCL	(2) 40 ml Vial	4002003	Heal
— 0925	TDS	Ice	(1) 250 ml poly	112612-2AAW	ALS
— 0926	Total Metals	Ice, HNO_3	(1) 500 ml poly	060914-2AAW	"
— 0927	NO_2/NO_3 Syn	Ice, H_2SO_4	(1) 250 ml poly	100614-2AAO	"
— 0921	8260 B (FB)	Ice, HCL	(3) 40 ml Vial	4002003	"
— 0923	2LNDMA (FB)	Ice	(1) 1LT Amber	0105801 Z	SRI

Continued on Page 89

Read and Understood By

Signed	Date	Signed	Date
[illegible]	1-27-15	D Wiebe	2/10/15

Parameters (124 gal)
Time - 150127 1500
pH - 7.49
Temp(°C) - 25.46
cond (uS/cm) - 1.034
TURB (NTUs) - 0.72

Samples (124 gal)

Sample #	Analysis	Preserv	cont.	Lot #	Lab
150127 1505	8260 B	ice, HCL	(3) 40 ml Vial	4002003	ALS
— 1506	2L NDMA	ice	(1) 1LT Amber	0105801Z	SRL
— 1507	TOC	ice, HCL	(2) 40 ml Vial	4002003	Heal
— 1508	Total Metals	ice, HNO_3	(1) 500 ml poly	060914-2AAW	ALS
— 1509	NO_2/NO_3 as N	ice, H_2SO_4	(1) 250 ml poly	100614-2AAO	"
— 1510	TDS	ice	(1) 250 ml poly	112612-2AAW	"

Parameters 124 gal second purge.
Time - 150128 1000
pH - 7.54
Temp(°C) - 24.80
Cond(uS/cm) - 1.036
TURB (NTUs) - 0.43

T. Kovoy + D. Nelson present on 1-28-15

Samples 124 gal second purge

Sample #	Analysis	Preserv	Cont.	Lot #	Lab
150128 1005	8260 B	ice HCL	(3) 40 ml Vial	4002003	ALS
— 1006	" (FB)	"	"	"	"
— 1007	2L NDMA	ice	(1) 1LT Amber	0105801Z	SRL
— 1008	" (FB)	"	"	"	"
— 1009	TOC	"	(2) 40 ml Vial	4002003	Heal
— 1010	TDS	"	(1) 250 ml poly	112612-2AAW	ALS
— 1011	Total Metals	ice, HNO_3	(1) 500 ml poly	060914-2AAO	"
— 1012	NO_2/NO_3 as N	ice, H_2SO_4	(1) 250 ml poly	100614-2AAO	"

Continued on Page NA

Read and Understood By

Signed	Date	Signed	Date
T. Kovoy	1-28-15	D Wiele	2/10/15

Project JER-1-488 Notebook No. MISC. # 22

Continues from Page NA

T. Howdy + F. Gallegos present. Weather is warm and clear. Zone will be sampled with 2 deconed sample tubes. Deconed with sink at 637. Generator in use. Probe 2167.

30 min EB Carboy G1

Sample #	Analysis	Preserv	cont.	Lot #	Lab
150210 0930	8260B	Ice, HCL	(3) 40 ml Vial	4002003	ALS
— 0931	LL NDMA	Ice	(1) LT Amber	01058012	SRI

Trip Blanks

150210 0730	8260B	Ice, HCL	(3) 40 ml Vial	4002003	ALS
— 0731	LL NDMA	Ice	(1) LT Amber	01058012	SRI

Parameters

TIME - 150210 1030
pH - 7.65
TEMP (°C) - 23.9
Cond (uS/cm) - 1097
TURB (NTUs) - 0.66
pH precal - 7.10 - 10.11 (25.2°)
pH postCal - 7.08 - 10.15
DTW (FT) - 451.10
Atmos - 12.67 psia

Meter #

	Bottle	Lot #	Exp
pH/Cond -	7	132163	4/15
TURB -	10	130049	12/15
" std - 5.94			
" Rds - 5.83			
" Lot # A4307			
" Exp - 2/28			

Samples

Sample #	Analysis	Preserv	cont.	Lot #	Lab
150210 1300	8260B	Ice, HCL	(3) 40 ml Vial	4002003	ALS
— 1301	LL NDMA	Ice	(1) LT Amber	01058012	SRI
— 1302	TOC	Ice, HCL	(2) 40 ml Vial	4002003	HERL
— 1340	TDS	Ice	(1) 250 ml poly	112612-2VV	ALS
— 1341	Total Metals	Ice, HNO_3	(1) 500 ml poly	06914-2AAW	"
150211 0800	NO_2/NO_3 by N	Ice, H_2SO_4	(1) 250 ml poly	100614-2AAO	"

Run #	1)	2)	3)	2/11/15 4)
	32.25	32.15	32.21	32.21
	31.30	31.29	31.32	~~32.95~~ 31.28
	30.09	30.06	31.30	30.28
	32.25	32.24	32.21	32.16

Continued on Page 91

Read and Understood By

T. Kowdy — Signed — 2-11-15 — Date

D. Wiebe — Signed — 2/20/15 — Date

Continues from Page 90

T. Kondy + B. Tufts present. Weather is cool and clear. Well will be purged with Bennett pump and sampled with teflon discharge tube. Parameters taken with QED Flow Cell.

TRIP
~~Field~~ Blanks Canton

Sample #	Analysis	Preserv	Cont.	Lot #	Lab
1502180730	8260B	Ice, HCL	(3) 40 ml Vial	4002003	ALS
— 0731	LLNDMA	Ice	(1) 1LT Amber	0105801Z	SRI

Parameters

Time - 1502180900
pH - 8.54
Temp(°C) - 22.75
Cond (uS/cm) - 0.950
TURB (NTU's) - 0.62

Meter #
~~pH/cond~~
TURB - 7
" std - 5.91
" Rds - 5.69
" Lot # - A4307
" Exp - 2/28/15

Flow cell calib. on 2-18-14

Samples 8.3 gal

Sample #	Analysis	Preserv	Cont.	Lot #	Lab
1502180901	8260B	Ice, HCL	(3) 40 ml Vials	4002003	ALS
— 0902	LLNDMA	Ice	(1) 1LT Amber	0105801Z	SRI
— 0903	TOC	Ice, HCL	(2) 40 ml Vial	4002003	HEAL
— 0904	TDS	Ice	(1) 250 ml poly	112612-2VV	ALS
— 0905	Total Metals	Ice, HNO_3	(1) 500 ml poly	06914-2AAW	"
— 0906	NO_2/NO_3 as N	Ice, H_2SO_4	(1) 250 ml poly	100614-2AA0	"

Continued on Page 92

Read and Understood By

Tim Kondy 2/18/15 — Signed, Date

D Wiebe 2/20/15 — Signed, Date

Project JER-1-488 Notebook No. MISC # 22

Continues from Page 91

Parameters 18 gal

Time - 150218 0930
pH - 8.60
Temp(°C) - 23.79
cond (uS/cm) - 0.952
TURB (NTU's) - 0.36

Sample's 18 gal

Sample #	Analysis	Preserv	Cont.	Lot #	Lab
150218 0931	8260B	Ice, HCL	(3) 40 ml Vial	4002003	ALS
— 0932	2LNDMA	Ice	(1) 1LT Amber	0105801Z	SRI
— 0933	TOC	Ice, HCL	(2) 40 ml Vial	4002003	HEAL
— 0934	TDS	Ice	(1) 250 ml poly	112612-2UU	ALS
— 0935	Total Metals	Ice HNO3	(1) 500 ml poly	06914-2AAU	"
— 0936	NO2/NO3 as N	Ice, H2SO4	(1) 250 ml poly	100614-2AA0	"

Parameter 44 gal

Time 150218 1425
pH - 8.68
Temp(°C) 24.18
cond (uS/cm) 0.953
TURB (NTU's) 0.61

Samples 44 gal

Sample #	Analysis	Preserv	Cont.	Lot #	Lab
150218 1430	8260B	Ice, HCL	(3) 40 ml Vial	4002003	ALS
— 1431	2LNDMA	Ice	(1) 1LT Amber	0105801Z	SRI
— 1432	TOC	Ice, HCL	(2) 40 ml Vial	4002003	Heal
— 1433	TDS	Ice	(1) 250 ml poly	112612-2UU	ALS
— 1434	Total Metal	Ice, HNO3	(1) 500 ml poly	06914-2AAU	"
— 1435	NO2/NO3 as N	Ice, H2SO4	(1) 250 ml poly	100614-2AA0	"

FB Carboy Temp 1

— 1436	8260B	Ice, HCL	(3) 40 ml Vial	4002003	ALS
— 1437	2LNDMA	Ice	(1) 1LT Amber	0105801Z	SRI

Continued on page 94 cont on page

Read and Understood By

Signed 2/18/15 Date

Signed 2/20/15 Date

Project JER-1-488 Notebook No. MISC III 22

Continues from Page 92

Parameters 124 gal 1st set

Time — 150219 1000
pH 8.70
Temp (°C) 24.23
cond (uS/cm) 0.963
TURB (NTUs) 0.40

Samples 124 gal. 1st set

Sample #	Analysis	Preserv	Cont.	Lot #	Lab
150219 1001	8260B	Ice, HCL	(3) 40 ml Vial	4002003	ACS
— 1002	" (FB)	"	"	"	"
— 1003	LLNDMA	Ice	(1) 1LT Amber	0105801Z	SRI
— 1004	" (FB)	"	"	"	"
— 1005	TOC	Ice, HCL	(2) 40 ml Vial	4002003	Heal
— 1006	TDS	Ice	(1) 250 ml poly	112612-2VV	ACS
— 1007	Total Metals	Ice, HNO_3	(1) 500 ml poly	06914-2AAW	"
— 1008	NO_2/NO_3 as N	Ice, H_2SO_4	(1) 250 ml poly	100614-2AAO	"

Parameters 124 gal 2nd set

Time 150219 1500
pH 8.68
Temp (°C) 24.90
cond (uS/cm) 0.948
TURB (NTUs) 0.38

Samples 124 gal 2nd set

Sample #	Analysis	Preserv	Cont.	Lot #	Lab
150219 1501	8260B	Ice, HCL	(3) 40 ml Vial	4002003	ACS
1502	LLNDMA	Ice	(1) 1LT Amber	0105801-Z	SRI
1503	TOC	Ice, HCL	(2) 40 ml Vial	4002003	Heal
1504	Total Metals	Ice, HNO_3	(1) 500 ml poly	06914-2AAW	ACS
1505	NO_2/NO_3 as N	Ice, H_2SO_4	(1) 250 ml poly	100614-2AAO	"
1506	TDS	Ice	(1) 250 ml poly	112612-2VV	"
150219 1250	8260B	Ice, HCL	(3) 40 ml Vial	4002003	ACS
— 1251	LLNDMA	Ice	(1) 1LT Amber	0105801-Z	SRI

Continued on Page NA

Read and Understood By

Signed: [illegible] Date: 2-19-2015 Signed: DJ Wilbe Date: 2/20/15

T. Kondy & C. Del Ferraro present. Weather is clear & warm. This zone will be sampled using 2 steam cleaned & triple rinsed, stainless steel sample tubes. Ben. in use Probe #2213. Surface checks performed on probe prior to sampling. NDMA evaluation samples will be combined with the regularly scheduled samples for JER-2.

30 Min. Equipment Blanks - Carboy G2

Sample	Analysis	Preservative	Container	Lot	Lab
150310 1350z	VOA by 8260 LL	ice/HCL	(3) 40ml vials	4258004	ALS
——— 1351z	Low Level NDMA	ice	(1) 1L Amber	0105801Z	SRI

Initial Parameters
Time - 150310 1440 ~~X~~ 00 z
PH - 8.71
Temp - 23.9°c
Cond - 1081 us/cm
Turb - 4.14 NTU's
pH pre - 7.24/10.21 (18.5°c)
pH post - 7.28/10.22
DTW - 491.21 ft.
Atmos - 12.52 psia

Final
Time - 150312 0919z
PH - 8.53
Temp - 22.1°c
Cond - 1095 us/cm
Turb - 1.72 NTU's
pH pre - 7.26/10.30 (12.6°c)
pH post - 7.22/10.32
DTW - 491.50 ft.
Atmos - ~~491.50 ft.~~ 00 12.55 psia
IDW - ½ gal.

Meter ID
pH/cond - 54
Turb - 1
" std - 5.21 NTU's
" rdg - 5.16 NTU's
" lot - 144307
" Exp - 3/31/15

Buffers	Lot	Exp
7	147065	11/16
10	146934	10/16

Samples

Sample	Analysis	Preservative	Container	Lot	Lab
150312 0830z	VOA by 8260 LL	ice/HCL	(3) 40ml vials	4258004	ALS
——— 0831z	" 8260 B	"	"	"	"
——— 0832z	607/Bromacil	ice	(1) 1L Amber	0105801Z	SRI
——— 0833z	Low Level NDMA	"	"	"	"
——— 0915z	Total Metals	ice/HNO_3	(1) 500ml poly	092214-2AAW	ALS
——— 0916z	TOC's	ice/HCL	(2) 40ml vials	4258004 ~~010515-2AAO~~	HEAL
——— 0917z	TDS by SM2540C	ice	(1) 250ml poly	~~100~~ 00 010515-2AAO	ALS
——— 0918z	NO_2/NO_3 as N	ice/H_2SO_4	"	100614-2AAO	"

Runs
1) 101.52, 98.35, 97.88, ~~101.97.92~~ 101.49
2) 101.55, 98.38, 98.20, 101.55
3) 101.61, 98.40, 98.21, 101.55

Continued on Page

Read and Understood By

Craig Del Ferraro — Signed — 3/12/15 — Date

Ron Munck — Signed — 3-12-15 — Date

Project JER-2-689 Notebook No. Misc. # 23

Continues from Page

T. Kouby & R. Mirabal present. Weather is cool and clear. Well will be purged with a steamed cleaned Bennett pump. Parameters will be taken with a QED Flow cell. Samples taken from a teflon discharge tube.

IDW - 493.60 ~~Carbo~~

Trip Blanks

Sample#	Analysis	Preserv	Cont.	Lot#	Lab
1504180730	8260B	Ice, HCL	(3) 40 ml Vial	4-258-004	ALS
— 0731	LLNDMA	Ice	(1) 1 LT Amber		SRI

Parameters 10 gal

Time - 1504180921
pH - 8.01
Temp °c - 22.55
Conductivity - .986
TURB (NTU) - 1.68

Meter #
TURB 1
" Std 5.23
" Rds 5.35
" Lot# A4307
" Exp 4-30-15

Flowcell Calibrated on 4-17-15

Samples 10 gal Carboy

Sample#	Analysis	Preserv	Cont	Lot#	Lab
1504180922	8260B	Ice, HCL	(3) 40 ml Vial	4-258-004	ALS
— 0923	" FB	"	"	"	"
— 0924	LLNDMA	Ice	(1) 1 LT Amber		SRI
— 0925	" FB	"	"	"	"
— 0926	TOC	Ice, HCL	(2) 40 ml Vial	4-258-004	Heal
— 0927	TDS	Ice	(1) 250 ml poly	012615-2440	ALS
— 0928	Total Metals	Ice, HNO_3	(1) 500 ml poly	052214-2444	"
— 0929	NO_2/NO_3 as N	Ice, H_2SO_4	(1) 250 ml poly	010515-2440	"

Continued on Page 3

Read and Understood By

Tim Kouby — Signed — 4/22/15 — Date

D. Wilke — Signed — 4/29/15 — Date

Parameters 18 gal

Time - 1504180951
pH - 8.00
Temp (°C) 23.83
Cond (uS/cm) - .986
TURB (NTU's) - 2.81

Samples 18 gal

Sample #	Analysis	Preserv	Cont	Lot #	Lab
1504180955	8260 B	Ice, HCL	(3) 40 ml Vial	4-258-004	ALS
— 0956	LL NDMA	Ice	(1) 1 LT Amber		SRT
— 0957	TOC	Ice, HCL	(2) 40 ml Vial	4-258-004	Heal
— 0958	TDS	Ice	(1) 250 ml poly	012615-2AA0	ALS
— 0959	Total Metals	Ice, HNO3	(1) 500 ml poly	092214-2AAW	"
— 1000	NO2/NO3 as N	Ice, H2SO4	(1) 250 ml poly	010515-2AA0	"

* pumped Dry. Pulled Bennett pump. Tank Depth 539.10 ft. Slow to recover.

4/20/15
Well recovered to 493.58.
Start purge at 845 stop at 905. 24 gal.
purge again in afternoon and purged 21 gal.

4/21/15
Take samples when first tunnel on.
Then cont. to pump dry for 124 gal. samples.

Parameters 44 gal

Time 1504210810
pH - 7.65
Temp (°C) - 21.39
Cond (uS/cm) - .982
TURB (NTU's) -
Start purge 0805 Stop purge

Samples 44 gal

Sample #	Analysis	Preserv	Cont.	Lot #	Lab
1504210800	8260 B (TB)	Ice, HCL	(3) 40 ml Vial	4-258-004	ALS
— 0811	8260 B	"	"	"	"
— 0801	LL NDMA (TB)	Ice	(1) 1 LT Amber		SRT
— 0812	LL NDMA	"	"	"	"
— 0813	TOC	Ice, HCL	(2) 40 ml Vial	4-258-004	Heal
— 0814	TDS	Ice	(1) 250 ml poly	012615-2AA0	ALS
— 0815	Total Metals	Ice, HNO3	(1) 500 ml poly	092214-2AAW	"
— 0816	NO2/NO3 as N	Ice, H2SO4	(1) 250 ml poly	010515-2AA0	"

Continued on Page 4

Read and Understood By

T. Konecke — Signed — 4/21/15 Date
D. Wiele — Signed — 4/29/15 Date

Project JER-2-689 Notebook No. MISC #23

Continues from Page 3

4-21-15 Sampled 44 gal samples, Then start purge for 124 gallons samples

Start purge - 0805 stop purge - 0831 26 gal
Start - 1425 Stop - 1448 23 gal

4-22-15 Start 854 83 gal
Stop 1018

Set pump dropper in well change out hoses, and Battery on Bennett pump Did not pump dry. pump 100 FT in water.

Parameters 124 gal
Time 150422 1325
pH - 7.54
Temp (°C) - 22.96
Cond (ds/cm) - .991
TURB (NTUs) - 1.57

Sample's 124 gal

Sample #	Analysis ~~Parameter~~	Preserv	cont.	Lot #	Lab
150422 1230	8260 B (TB)	Ice, HCL	(3) 40 ml Vial	4-258-004	ALS
— 1330	8260 B	"	"	"	"
— 1331	LL NDMA	Ice	(1) 1 LT Amber		SRT
— 1332	TOC	Ice HCL	(2) 40 ml Vial	4-258-004	Heal
— 1333	TDS	Ice	(1) 250 ml poly	012615-2AA0	ALS
— 1334	Total Metals	Ice, HNO_3	(1) 500 ml poly	092214-2AAW	"
— 1335	NO_2/NO_3 as N	Ice, H_2SO_4	(1) 250 ml poly	010515-2AA0	"

Continued on Page 7

Read and Understood By

Signed 4/22/15 Date D Wiebe Signed 4/29/15 Date

Parameters 124 sal

Time — 1504231020
pH — 7.14
Temp (°C) - 25.61
Cond (ds/cm) — .998
TURB (NTU's) - 1.80

Samples 124 sal

Sample #	Analysis	Preserv	Cont.	Lot #	Lab
1504230730	8260B (TB)	1Cq HCL	(3) 40ml Vial	4-258-004	ALS
— 0731	LLNDMA (TB)	Ice	(1) 1LT Amber		SRT
— 1025	8260 B	1Cq HCL	(3) 40ml Vial	4-258-004	ALC
— 1026	LLNDMA	Ice	(1) 1LT Amber		
— 1027	TOC	1Cq HCL	(3) 40ml Vial	4-258-004	Heal
— 1028	TDS	Ice	(1) 250ml poly	040615-2AMO	ALS
— 1029	Total Metals	1Cq HNO_3	(1) 500ml poly	0922M-2AMW	"
— 1030	NO_2/NO_3 as N	1Cq H_2SO_4	(1) 250ml poly	010515-2AMO	"

Continued on Page NA

Read and Understood By

T. Kong — Signed — 4-23-15 — Date

D. Wiebe — Signed — 4/29/15 — Date

Project JER-2-587 WJI ENV-0020 Notebook No. D64 #118(z)

Continues from Page

T. Kondy & C. Del Ferraro present. Weather is clear & cool. This zone will be sampled using 2 triple rinsed, stainless steel sample tubes. Gen. in use. Probe # 2213. Surface checks performed on probe prior to sampling. NDMA evaluation samples will be combined with the regularly scheduled samples for this zone.

30 Min Equipment Blanks - Carboy G2

Sample	Analysis	Preservative	Container	Lot	Lab
150312 1005z	VOA by 8260 LL	ice/HCL	(3) 40ml vials	4258004	ALS
—— 1006z	Low Level NDMA	ice	(1) 1L Amber	0105801z	SRI

Initial Parameters		Final		Meter ID	
Time	- 150312 1045z	Time	- 150316 1020 z	pH/cond	- 54
pH	- 8.09	PH	- 7.73	Turb	- 1
Temp	- 22.7°c	Temp	- 20.13°c	" std	- 5.21 NTU's
Cond	- 1049 us/cm	Cond	- 1066	" rdg	- 5.03 NTU's
Turb	- 0.89 NTU's	Turb	- 1.43 NTU's	" lot	- A4307
pH pre	- 7.19/10.27 (15.1°c)	pH pre	- 7.29/10.54 (9.7°c)	" Exp	- 3/31/15
pH post	- 7.22/10.26	pH post	- 7.35/10.55		
DTW	- 491.50 ft.	DTW	- 493.55	Buffers	Lot / Exp
Atmos	- 12.63 psia	Atmos	- 12.41	7	147065 / 11/16
		IDW	- 1 gal.	10	146934 / 10/16

Samples

Sample	Analysis	Preservative	Container	Lot	Lab
150316 0900 Z	VOA by 8260 LL	ice/HCL	(3) 40ml vials	4258004	ALS
—— 0901 Z	" 8260B	"	"	"	"
—— 0902 Z	607/Bromacil	ice	(1) 1L Amber	0105801z	SRI
—— 0903 Z	Low Level NDMA	"	"	"	"
—— 0940 Z	Total Metals	ice/HNO_3	(1) 500ml poly	092214-2AAW	ALS
—— 0941 Z	TOC's	ice/HCL	(2) 40ml vials	4258004	HEAL
—— 0942 Z	TDS by SM2540C	ice	(1) 250ml poly	010515-2AAD	ALS
—— 0943 Z	NO_2/NO_3 by 353.2	ice/H_2SO_4	"	100614-2AAD	"

Runs	1)	2)	3)	4)
	55.15	56.80	54.22	54.32
	54.77	56.76	54.28	54.31
	54.72	56.55	54.24	54.25
	55.36	56.53	54.21	54.17

Continued on Page

Read and Understood By

Signed — Date 3/16/15 — Signed — Date 3-19-15

Project JER-2-587 Notebook No. MISC #23

Continues from Page NA

T. Kondy + D. Hellkersen present. Weather is cool and cloudy. Well will be purged with Bennett pump. Parameters will be taken with a QED Flowcell. Samples taken from teflon discharge tube.

Open port on 4-23-15. Depth to water - 491.10 FT

Parameters 10 gal		Meter #		Flow cell
Time -	150424 0800	TURB -	1	Calibrated on
pH -	7.67	" std -	5.23	4-24-15
Temp (°C) -	21.00	" 2ds -	5.29	
Cond (uS/cm) -	0.999	" Lot -	A4307	Calibrator - G-2
TURB (NTUs) -	2.84	" Exp -	4/30/15	

Sample's 10 gal

Sample #	Analysis	Preserv	Cont.	Lot #	Lab
150424 0805	8260 B	Ice, HCL	(3) 40 ml Vial	4-258-004	ACS
— 0806	" (FB)	"	"	"	"
— 0807	LL NDMA	Ice	(1) 1 LT Amber		SRI
— 0808	" (FB)	"	"	"	"
— 0809	TOC	Ice, HCL	(2) 40 ml Vial	4-258-004	Heal
— 0810	TDS	Ice	(1) 250 ml poly	012615-2AA0	ACS
— 0811	Total Metals	Ice, HNO3	(1) 500 ml poly	092214-2AA0	"
— 0812	NO2/NO3 as N	Ice, H2SO4	(1) 250 ml poly	010515-2AA0	"

Continued on Page 9

Read and Understood By

T. Kondy — Signed — 4-24-15 — Date

D. Wiebe — Signed — 4/29/15 — Date

Parameters 18 gal
TIME - 150424/0830
pH - 7.67
Temp(°C) - 21.03
Cond (uS/cm) - 1.004
TURB (NTU's) - 7.89

Sample's 18 gal

Sample#	Analysis	Preserv	Cont	Lot#	Lab
150424/0831	8260B	Ice, HCL	(3) 40 ml VOA	4-258-004	ACS
— 0832	LL NPMA	Ice	(1) 1 LT Amber		SRI
— 0833	TOC	Ice, HCL	(2) 40 ml Vial	4-258-004	Heal
— 0834	TDS	Ice	(1) 250 ml poly	012615-2AA0	ACS
— 0835	Total Metals	Ice, HNO_3	(1) 500 ml poly	092214-2AAW	"
— 0836	NO_2/NO_3 as N	Ice, H_2SO_4	(1) 250 ml poly	010515-2AA0	"
~~— 0837~~					

Continued on Page 10

Read and Understood By

Tim Kordy — Signed — 4-24-15 — Date

D Wiehe — Signed — 4/29/15 — Date

Project JER-2-587

Continues from Page 9

Notebook No. Misc # 23

Paramedic 44 gal

Time - 150424 0915

pH - 7.54

Temp(°c) - 22.54

Cond (uS/cm) - 0.987

TURB (NTU's) - 1.02

Samples 44 gal

Sample#	Analysis	Preserv	Con't.	Lot#	Lab
150424 0916	8260 B	Ice, HCL	(3) 40 ml Vial	4-258-004	ALS
— 0917	2L NDMA	Ice	(1) 1 LT Amber		SRL
— 0918	TOC	Ice, HCL	(2) 40 ml Vial	4-258-004	Hea
— 0919	TDS	Ice	(1) 250 ml poly	012615-2AA0	AL
— 0920	Total metals	Ice, HNO_3	(1) 500 ml poly	092214-2AAW	ic
— 0921	NO_2/NO_3 as N	Ice, H_2SO_4	(1) 250 ml poly	010515-2AA0	s

Continued on Page 11

Read and Understood By

T. Kordy — Signed — 4-24-15 — Date

D Wiebe — Signed — 4/29/15 — Date

Parameters 124 gal.
Time — 1504 24 1205
pH — 7.69
Temp(°c) — 24.35
Cond (US/CM) — 6.984
TURB (NTU's) — 7.69

Samples 124 gallons

Sample #	Analysis	Preserv	Cont.	Lot #	Lab
1504 24 1206	8260 B	Ice, HCL	(3) 40 ml Vial	4-258-004	ALS
— 1207	LL NDMA	Ice	(1) 1 LT Amber		SRI
— 1208	TOC	Ice, HCL	(2) 40 ml Vial	4-258-004	Heal
— 1209	TDS	Ice	(1) 250 ml poly	012615-2AA0	ALS
— 1210	Total Metals	Ice, HNO_3	(1) 500 ml poly	092214-2AAW	"
— 1211	NO_2/NO_3 as N	Ice, H_2SO_4	(1) 250 ml poly	010515-2AA0	"

Continued on Page 10

Read and Understood By

Signed	Date	Signed	Date
[illegible]	4-24-15	DT Wiebe	4/29/15

Project JER. 2 - 587 Notebook No. MISC # 23

Continues from Page 11

Parameters 124 gal

Time - 150424 1500

pH - 7.69

Temp (°C) - 24.53

cond (uS/cm) - 0.995

TURB (NTU's) - 1.76

Sample's 124 gal

Sample #	Analysis	Preserv	Cont.	Lot #	Lab
150424 1505	8260B	Ice, HCL	(3) 40 ml Vial	4-258-004	ALS
1506	LLNDMA	Ice	(1) 1 LT Amber		SRL
1507	TOC	Ice, HCL	(2) 40 ml Vial	4-258-004	Heal
1508	TDS	Ice	(1) 250 ml poly	012615-2440	ALS
1509	Total Metals	Ice, HNO_3	(1) 500 ml poly	092214-244W	"
1510	NO_2/NO_3 as N	Ice, H_2SO_4	(1) 250 ml poly	010515-2440	"

Continued on Page NA

Read and Understood By

Signed	Date	Signed	Date
[illegible]	4-24-15	D Wiele	4/29/15

Project JER-2-508 Notebook No. D64 # 118 (2)

Continues from Page

B Williams + T. Hondy present. Weather is cloudy + cool. This zone will be sampled using 2 triple rinsed stainless steel sample tubes. Gen in use. Probe 2213. Surface checks performed on probe prior to sampling. NDMA evaluation samples will be combined with regularly scheduled samples for this zone. Carboy G-2 in use. R. Burrows present

30 min Equipment blanks

Sample #	Analysis	Preservative	Container	Lot	Lab
1503161400Z	8260 LL	ICE HCL	(3) 40 mL vial	4258004	ALS
—1401 Z	LL NDMA	ICE	(1) 1L Amber	0105801Z	SwRI

Initial Parameters		Final Parameters	Meter I.D.	Buffer	Lot	Exp
Time	1503171025 Z	1503180920 Z	PH/Cond - 54	7	147065	11/16
pH	8.14	7.80	Turb - 1	10	146934	10/16
Temp	23.2°C	21.0°C	" Std - 5.21 NTUs			
Cond	1006 uscm	1034 uscm	" Rdg - 5.18 NTUs			
Turb	1.06 NTUs	0.95 NTUs	" Lot - A4307			
pH pre	7.25/10.40 (15.6°C)	7.33/10.55 (9.4°C)	" Exp - 3/31/15			
pH post	7.33/10.48	7.40/10.64				
DTW	493.55 ft	493.49 ft	IDW: 2 gals			
ATMOS	12.65 psia	12.62 psia				

Samples

Sample #	Analysis	Preservative	Container	Lot	Lab
1503171050 Z	8260 LL	ICE HCL	(3) 40 mL vials	4258004	ALS
—1051 Z	8260 B	ICE HCL	"	"	"
—1052 Z	NDMA/DMN/ Bromacil by 607	ICE	(1) 1L Amber	0105801Z	SwRI
—1341 Z	Total Metals	ICE HNO3	(1) 500 mL poly	092214-2AAW	ALS
—1440 Z	TOC's	ICE HCL	(2) 40 mL vials	4258004	HEAL
1503180830 Z	Anions/Alk	ICE no head	(2) 250 mL poly	010515-2AA0	ALS
—0831 Z	TDS	ICE	(1) 250 mL poly	"	"
—0832 Z	Perchlorate	ICE ½ head	"	"	"
—0910 Z	NO2, NO3	ICE H2SO4	"	100614-2AA0	"
1503171340 Z	LL NDMA	ICE	(1) 1L Amber	0105801Z	SwRI

Runs	1)	2)	3)	4)	5)	6)	7)
	22.51	22.50	22.48	22.53	22.54	22.48	22.44
	22.63	22.58	22.55	22.61	22.60	22.62	22.54
	22.55	22.55	22.57	22.59	22.56	22.50	22.52
	22.47	22.54	22.44	22.48	22.48	22.35	22.37

Continued on Page

Read and Understood By

Signed 3/18/15 Date

Signed 3-19-15 Date

Project JER-2-508 Notebook No. MISC #23

Continues from Page NA

T. KONDY + M. Avalos present. Weather is cool and clear. Well will be purged with a Bennett pump and parameters taken with a QED Flow cell. Samples taken from Teflon discharge Tube.

open port on 4-27-15. Depth to water. 488.70 FT.

Parameters	10 gal	Meter #	Flow cell calib.
Time	150428 0920	TURB - 4	on 4-28-15
pH	7.89	" std - 52.6	
Temp (°C)	22.44	" Rdg - 53.0	Carboy
cond (uS/cm)	.965	" Lot# - A4307	
TURB (NTU's)	073	" Exp - 4/30/15	

Samples 10 gal

Sample	Analysis	Preserv	Cont.	Lot#	Lab
150428 0800	8260B (TB)	Ice, HCL	(3) 40 ml Vial	4-258-004	ALS
— 0921	8260B	"	"	"	"
— 0922	8260B (FB)	"	"	"	"
— 0801	1,4 DNA (TB)	Ice	(1) 1LT Amber		SRI
— 0923	1,4 DNA	"	"	"	"
— 0924	1,4 DNA (FB)	"	"	"	"
— 0925	TOC	Ice, HCL	(2) 40 ml Vial	4-258-004	Heal
— 0926	TDS	Ice	(1) 250 ml poly	012615-2AAO	ALS
— 0927	Total Metals	Ice, HNO_3	(1) 500 ml poly	092214-2AAW	"
— 0928	NO_2/NO_3 as N	Ice, H_2SO_4	(1) 250 ml poly	010515-2AAO	"

Continued on Page 14

Read and Understood By

Signed	Date	Signed	Date
Tim Kondy	4-28-15	D T Wiebe	4/29/15

Project JER-2-508 Notebook No. Misc #23

Continues from Page 13

Parameters 18 gal

Time - 150428 0950

pH - 7.70

Temp (°C) - 23.81

Cond (us/cm) - .969

TURB (NTU's) - 0.17

Sample's 18 gal

Sample #	Analysis	Preserv	Cont	Lot #	Lab
150428 0951	8260B	Ice, HCL	(3) 40 ml Vial	4-258-004	ALS
— 0952	LC Nitrate	Ice	(1) 1 LT Amber		SRI
— 0953	TOC	Ice, HCL	(2) 40 ml Vial	4-258-004	Heal
— 0954	TDS	Ice	(1) 250 ml poly	012615-2440	ALS
— 0955	Total Metals	Ice, HNO_3	(1) 500 ml poly	092214-2440	"
— 0956	NO_2/NO_3 as N	Ice, H_2SO_4	(1) 250 ml poly	010515-2440	"

Continued on Page 15

Read and Understood By

Signed	Date	Signed	Date
T. Konds	4-28-15	D Wiebe	4/29/15

Parameters 44 gal
TIME – 1504290810
pH – 7.91
Temp (°C) – 23.31
Cond (uS/cm) – 0.957
TURB (NTU's) 0.68

Samples 44 gal

Samples #	Analysis	Preserv	Cont.	Lot #	Lab
1504290815	8260B	Ice, HCL	(3) 40ml Vial	4-258-009	ALS
— 0816	LL NDMA	Ice	(1) 1 LT Amber		SRL
— 0817	TOC	Ice, HCL	(2) 40ml Vial	4-258-009	Heal
— 0818	TDS	Ice	(1) 250 ml poly	012615-2440	ALS
— 0819	Total Metals	Ice, HNO_3	(1) 500ml poly	092214-2444W	"
— 0820	NO_2/NO_3 as N	Ice, H_2SO_4	(1) 250 ml poly	010515-2440	"

Continued on Page 16

Read and Understood By

T. Tonly — Signed — 4-29-15 — Date

D Wiebe — Signed — 5/13/15 — Date

Project JER-2-508 Notebook No. Misc #23

Continues from Page 15

Parameters 124 gal

TIME - 1505071015
pH - 7.40
Temp (°C) - 24.20
Cond (US/CM) - 0.867
TURB (NTUS) - 0.50

Samples 124 gal

Sample #	Analysis	Preserv	Cont.	Lot #	Lab
1505070700	8260B (TB)	Ice, HCL	(3) 40 ml Vial	4-258-004	ALS
— 1016	8260B	"	"	"	"
— 0701	LLNDMA (TB)	Ice	(1) 1L Amber		SGS
— 1017	LLNDMA	"	"		"
— 1018	TOC	Ice, HCL	(2) 40 ml Vial	4-258-004	Heal
— 1019	TDS	Ice	(1) 250 ml poly	012615-2440	ALS
— 1020	Total Metals	Ice, HNO_3	(1) 500 ml poly	092214-2440	"
— 1021	NO_2/NO_3 as N	Ice, H_2SO_4	(1) 250 ml poly	010515-2440	"

Continued on Page 17

Read and Understood By

Signed	Date	Signed	Date
[illegible]	5-7-15	D Weller	5/13/15

Project JER. 2-508 Notebook No. MISC #23

Continues from Page 16

Parameter 124 gal
Time - 150507,1400
pH - 7.64
Temp (°C) - 24.25
cond (US/CM) - 0.903
TURB (NTU's) - 0.42

Sample's 124 gal

Sample #	Analysis	Preserv	Cont.	Lot #	Lab
150507,1401	8260 B	Ice, HCL	(3) 40 ml Vial	4-258-004	ACS
—— 1402	24NRM A	Ice	(1) 1 LT Amber		SRI
—— 1403	TOC	Ice, HCL	(2) 40 ml Vial	4-258-004	Heal
—— 1404	TDS	Ice	(1) 250 ml poly	012615-2440	ACS
—— 1405	Total Metals	Ice, HNO_3	(1) 500 ml poly	092214-2448	"
—— 1406	NO_2/NO_3 as N	Ice, H_2SO_4	(1) 250 ml poly	010515-2448	"

Continued on Page NA

Read and Understood By

Tim Kordy — Signed — 5-7-15 — Date

D Wiehe — Signed — 5/13/15 — Date

Appendix C
Chemical Analytical Data

Analytical Results for Sampling Events at JER-1-488

Event Date	Analysis Method	Sample	Constituent	Result	Units	Quant Limit	Det Limit	Extract Efficiency	QA Flag
2/10/2015	PARAMS	1502101030	DTW	451.10	ft	NA	NA		
2/10/2015	PARAMS	1502101030	Turbidity	0.66	NTU	NA	NA		
2/10/2015	PARAMS	1502101030	Temperature	23.9	ºC	NA	NA		
2/10/2015	PARAMS	1502101030	Conductivity	1097	µS/cm	NA	NA		
2/10/2015	PARAMS	1502101030	Formation Pressure	31.30	psia	NA	NA		
2/10/2015	PARAMS	1502101030	Atmospheric Pressure	12.67	psia	NA	NA		
2/10/2015	PARAMS	1502101030	pH	7.65	NA	NA	NA		
2/10/2015	8260C	1502101300	2-Chloro-1,3-butadiene	ND	ug/L	1.0	0.27		
2/10/2015	8260C	1502101300	1,1,1,2-Tetrachloroethane	ND	ug/L	1.0	0.22		
2/10/2015	8260C	1502101300	1,1,1-Trichloroethane (TCA)	ND	ug/L	1.0	0.36		
2/10/2015	8260C	1502101300	1,1,2,2-Tetrachloroethane	ND	ug/L	1.0	0.25		
2/10/2015	8260C	1502101300	1,1,2-Trichloroethane	ND	ug/L	1.0	0.34		
2/10/2015	8260C	1502101300	1,1,2-Trichloro-1,2,2-Trifluoroethane	ND	ug/L	1.0	0.31		
2/10/2015	8260C	1502101300	1,1-Dichloroethane (1,1-DCA)	ND	ug/L	1.0	0.20		
2/10/2015	8260C	1502101300	Dichlorodifluoromethane (CFC 12)	ND	ug/L	1.0	0.46		
2/10/2015	8260C	1502101300	1,2,3-Trichloropropane	ND	ug/L	1.0	0.70		
2/10/2015	8260C	1502101300	Carbon Tetrachloride	ND	ug/L	1.0	0.45		
2/10/2015	8260C	1502101300	1,2-Dibromoethane	ND	ug/L	1.0	0.24		
2/10/2015	8260C	1502101300	1,2-Dichloroethane	ND	ug/L	1.0	0.36		
2/10/2015	8260C	1502101300	1,2-Dichloropropane	ND	ug/L	1.0	0.20		
2/10/2015	8260C	1502101300	Chloromethane	ND	ug/L	2.0	0.21		
2/10/2015	8260C	1502101300	2,2-Dichloro-1,1,1-trifluoroethane (CFC 123)	ND	ug/L	1.0	0.32		
2/10/2015	8260C	1502101300	2-Butanone (MEK)	ND	ug/L	5.0	0.81		
2/10/2015	8260C	1502101300	Acrolein	ND	ug/L	10	3.0		
2/10/2015	8260C	1502101300	Bromodichloromethane	ND	ug/L	1.0	0.32		
2/10/2015	8260C	1502101300	2-Hexanone	ND	ug/L	5.0	1.7		
2/10/2015	8260C	1502101300	2-Methyl-1-propanol (Isobutyl Alcohol)	ND	ug/L	100	11		
2/10/2015	8260C	1502101300	2-Propanol	ND	ug/L	50	8.6		
2/10/2015	8260C	1502101300	3-Chloro-1-propene (Allyl Chloride)	ND	ug/L	2.0	0.26		
2/10/2015	8260C	1502101300	4-Methyl-2-pentanone	ND	ug/L	5.0	0.67		
2/10/2015	8260C	1502101300	1,2-Dibromo-3-chloropropane (DBCP)	ND	ug/L	2.0	0.74		
2/10/2015	8260C	1502101300	Acetonitrile	ND	ug/L	25	4.7		
2/10/2015	8260C	1502101300	Acrylonitrile	ND	ug/L	5.0	1.4		
2/10/2015	8260C	1502101300	Benzene	ND	ug/L	1.0	0.20		
2/10/2015	8260C	1502101300	1,4-Dioxane	ND	ug/L	100	20		

Analytical Results for Sampling Events at JER-1-488

Event Date	Analysis Method	Sample	Constituent	Result	Units	Quant Limit	Det Limit	Extract Efficiency	QA Flag
2/10/2015	8260C	1502101300	Bromoform	ND	ug/L	1.0	0.42		
2/10/2015	8260C	1502101300	Bromomethane	ND	ug/L	2.0	0.29		
2/10/2015	8260C	1502101300	Carbon Disulfide	ND	ug/L	1.0	0.22		
2/10/2015	8260C	1502101300	cis-1,3-Dichloropropene	ND	ug/L	1.0	0.24		
2/10/2015	8260C	1502101300	Acetone	ND	ug/L	10	1.3		
2/10/2015	8260C	1502101300	Ethyl Methacrylate	ND	ug/L	2.0	0.44		
2/10/2015	8260C	1502101300	Dichloromethane	ND	ug/L	1.0	0.60		
2/10/2015	8260C	1502101300	Chloroform	ND	ug/L	1.0	0.25		
2/10/2015	8260C	1502101300	Cyclohexane	ND	ug/L	10	0.25		
2/10/2015	8260C	1502101300	Dibromochloromethane	ND	ug/L	1.0	0.31		
2/10/2015	8260C	1502101300	Dibromomethane	ND	ug/L	1.0	0.32		
2/10/2015	8260C	1502101300	Chlorobenzene	ND	ug/L	1.0	0.29		
2/10/2015	8260C	1502101300	Dichlorofluoromethane (CFC 21)	ND	ug/L	1.0	0.24		
2/10/2015	8260C	1502101300	trans-1,4-Dichloro-2-butene	ND	ug/L	1.0	0.70		
2/10/2015	8260C	1502101300	Ethylbenzene	ND	ug/L	1.0	0.20		
2/10/2015	8260C	1502101300	Iodomethane	ND	ug/L	5.0	0.98		
2/10/2015	8260C	1502101300	Methacrylonitrile	ND	ug/L	5.0	0.50		
2/10/2015	8260C	1502101300	Methyl Methacrylate	ND	ug/L	2.0	0.62		
2/10/2015	8260C	1502101300	Methyl tert-Butyl Ether	ND	ug/L	10	0.29		
2/10/2015	8260C	1502101300	Methylcyclohexane	ND	ug/L	10	0.27		
2/10/2015	8260C	1502101300	Tetrachloroethene (PCE)	ND	ug/L	1.0	0.30		
2/10/2015	8260C	1502101300	cis-1,2-Dichloroethene	ND	ug/L	1.0	0.30		
2/10/2015	8260C	1502101300	Chloroethane	ND	ug/L	2.0	0.24		
2/10/2015	8260C	1502101300	Tetrahydrofuran (THF)	ND	ug/L	5.0	0.96		
2/10/2015	8260C	1502101300	Toluene	ND	ug/L	1.0	0.20		
2/10/2015	8260C	1502101300	Trichloroethene (TCE)	ND	ug/L	1.0	0.22		
2/10/2015	8260C	1502101300	Trichlorofluoromethane (CFC 11)	ND	ug/L	1.0	0.20		
2/10/2015	8260C	1502101300	Vinyl Chloride	ND	ug/L	1.0	0.32		
2/10/2015	8260C	1502101300	Styrene	ND	ug/L	1.0	0.20		
2/10/2015	8260C	1502101300	1,2-Dichloro-1,1,2-trifluoroethane (CFC 123a)	ND	ug/L	1.0	0.21		
2/10/2015	8260C	1502101300	Propionitrile	ND	ug/L	5.0	3.1		
2/10/2015	8260C	1502101300	m,p-Xylenes	ND	ug/L	2.0	0.33		
2/10/2015	8260C	1502101300	o-Xylene	ND	ug/L	1.0	0.20		
2/10/2015	8260C	1502101300	trans-1,2-Dichloroethene	ND	ug/L	1.0	0.33		
2/10/2015	8260C	1502101300	trans-1,3-Dichloropropene	ND	ug/L	1.0	0.20		
2/10/2015	8260C	1502101300	1,1-Dichloroethene	ND	ug/L	1.0	0.57		
2/10/2015	8260C	1502101300	Vinyl Acetate	ND	ug/L	5.0	1.1		

Analytical Results for Sampling Events at JER-1-488

Event Date	Analysis Method	Sample	Constituent	Result	Units	Quant Limit	Det Limit	Extract Efficiency	QA Flag
2/10/2015	TAP 01-04	1502101301	N-Nitrosodimethylamine	0.72	ng/L	0.53	0.35		
2/10/2015	TAP 01-04	1502101301	N-Nitrodimethylamine	ND	ng/L	0.53	0.21		
2/10/2015	SW9060	1502101302	Total Organic Carbon	ND	mg/l	1	0.1611		
2/10/2015	SM 2540 C	1502101340	Total Dissolved Solids (TDS)	757	mg/L	10	5		
2/10/2015	6010C	1502101341	Calcium, Total	104	mg/L	5.0	0.8		
2/10/2015	6020A	1502101341	Antimony, Total	ND	mg/L	0.0010	0.0002		
2/10/2015	6010C	1502101341	Vanadium, Total	0.002	mg/L	0.050	0.0007		J
2/10/2015	6020A	1502101341	Arsenic, Total	0.0006	mg/L	0.0010	0.0003		J
2/10/2015	6010C	1502101341	Iron, Total	ND	mg/L	0.10	0.02		
2/10/2015	6010C	1502101341	Barium, Total	0.016	mg/L	0.020	0.004		J
2/10/2015	6010C	1502101341	Cadmium, Total	ND	mg/L	0.0050	0.0005		
2/10/2015	6010C	1502101341	Magnesium, Total	61.1	mg/L	1.0	0.02		
2/10/2015	6010C	1502101341	Chromium, Total	ND	mg/L	0.010	0.0009		
2/10/2015	6010C	1502101341	Cobalt, Total	ND	mg/L	0.050	0.002		
2/10/2015	6010C	1502101341	Copper, Total	ND	mg/L	0.020	0.004		
2/10/2015	6010C	1502101341	Aluminum, Total	ND	mg/L	0.10	0.03		
2/10/2015	6010C	1502101341	Boron, Total	0.05	mg/L	0.20	0.03		J
2/10/2015	6010C	1502101341	Sodium, Total	54.9	mg/L	1.0	0.09		
2/10/2015	6010C	1502101341	Molybdenum, Total	0.008	mg/L	0.025	0.002		J
2/10/2015	6020A	1502101341	Thallium, Total	ND	mg/L	0.0010	0.00004		
2/10/2015	6010C	1502101341	Potassium, Total	3.7	mg/L	2.0	0.2		
2/10/2015	6010C	1502101341	Zinc, Total	0.029	mg/L	0.020	0.005		
2/10/2015	6010C	1502101341	Beryllium, Total	ND	mg/L	0.0030	0.0002		
2/10/2015	6010C	1502101341	Strontium, Total	2.56	mg/L	0.10	0.002		
2/10/2015	6010C	1502101341	Lead, Total	ND	mg/L	0.050	0.002		
2/10/2015	6010C	1502101341	Silver, Total	ND	mg/L	0.010	0.0009		
2/10/2015	6010C	1502101341	Selenium, Total	ND	mg/L	0.010	0.003		
2/10/2015	6010C	1502101341	Nickel, Total	ND	mg/L	0.040	0.002		
2/10/2015	7470A	1502101341	Mercury, Total	ND	mg/L	0.00020	0.00003		
2/10/2015	6010C	1502101341	Manganese, Total	ND	mg/L	0.010	0.002		
2/10/2015	6010C	1502101341	Tin, Total	ND	mg/L	0.50	0.05		
2/10/2015	353.2	1502110800	Nitrate+Nitrite as Nitrogen	0.802	mg/L	0.050	0.002		
2/10/2015	PARAMS	1502180900	Conductivity	950	µS/cm	NA	NA		
2/10/2015	PARAMS	1502180900	Turbidity	0.62	NTU	NA	NA		
2/10/2015	PARAMS	1502180900	pH	8.54	NA	NA	NA		

Analytical Results for Sampling Events at JER-1-488

Event Date	Analysis Method	Sample	Constituent	Result	Units	Quant Limit	Det Limit	Extract Efficiency	QA Flag
2/10/2015	PARAMS	1502180900	Temperature	22.75	ºC	NA	NA		
2/10/2015	8260C	1502180901	2-Hexanone	ND	ug/L	5.0	1.7		
2/10/2015	8260C	1502180901	1,2-Dibromo-3-chloropropane (DBCP)	ND	ug/L	2.0	0.74		
2/10/2015	8260C	1502180901	1,1,1,2-Tetrachloroethane	ND	ug/L	1.0	0.22		
2/10/2015	8260C	1502180901	1,1,1-Trichloroethane (TCA)	ND	ug/L	1.0	0.36		
2/10/2015	8260C	1502180901	1,1,2,2-Tetrachloroethane	ND	ug/L	1.0	0.25		
2/10/2015	8260C	1502180901	1,1,2-Trichloroethane	ND	ug/L	1.0	0.34		
2/10/2015	8260C	1502180901	1,1-Dichloroethane (1,1-DCA)	ND	ug/L	1.0	0.20		
2/10/2015	8260C	1502180901	Carbon Tetrachloride	ND	ug/L	1.0	0.45		
2/10/2015	8260C	1502180901	1,2,3-Trichloropropane	ND	ug/L	1.0	0.70		
2/10/2015	8260C	1502180901	2-Methyl-1-propanol (Isobutyl Alcohol)	ND	ug/L	100	11		
2/10/2015	8260C	1502180901	1,2-Dibromoethane	ND	ug/L	1.0	0.24		
2/10/2015	8260C	1502180901	1,2-Dichloroethane	ND	ug/L	1.0	0.36		
2/10/2015	8260C	1502180901	1,2-Dichloropropane	ND	ug/L	1.0	0.20		
2/10/2015	8260C	1502180901	1,4-Dioxane	ND	ug/L	100	20		
2/10/2015	8260C	1502180901	1,1,2-Trichloro-1,2,2-Trifluoroethane	0.35	ug/L	1.0	0.31		J
2/10/2015	8260C	1502180901	Acetone	ND	ug/L	10	1.3		
2/10/2015	8260C	1502180901	2,2-Dichloro-1,1,1-trifluoroethane (CFC 123)	ND	ug/L	1.0	0.32		
2/10/2015	8260C	1502180901	m,p-Xylenes	ND	ug/L	2.0	0.33		
2/10/2015	8260C	1502180901	Acrylonitrile	ND	ug/L	5.0	1.4		
2/10/2015	8260C	1502180901	Chlorobenzene	ND	ug/L	1.0	0.29		
2/10/2015	8260C	1502180901	1,2-Dichloro-1,1,2-trifluoroethane (CFC 123a)	ND	ug/L	1.0	0.21		
2/10/2015	8260C	1502180901	2-Propanol	ND	ug/L	50	8.6		
2/10/2015	8260C	1502180901	Acetonitrile	ND	ug/L	25	4.7		
2/10/2015	8260C	1502180901	4-Methyl-2-pentanone	ND	ug/L	5.0	0.67		
2/10/2015	8260C	1502180901	Carbon Disulfide	ND	ug/L	1.0	0.22		
2/10/2015	8260C	1502180901	trans-1,2-Dichloroethene	ND	ug/L	1.0	0.33		
2/10/2015	8260C	1502180901	Acrolein	ND	ug/L	10	3.0		
2/10/2015	8260C	1502180901	2-Butanone (MEK)	ND	ug/L	5.0	0.81		
2/10/2015	8260C	1502180901	Benzene	ND	ug/L	1.0	0.20		
2/10/2015	8260C	1502180901	Bromodichloromethane	ND	ug/L	1.0	0.32		
2/10/2015	8260C	1502180901	Bromoform	ND	ug/L	1.0	0.42		
2/10/2015	8260C	1502180901	3-Chloro-1-propene (Allyl Chloride)	ND	ug/L	2.0	0.26		
2/10/2015	8260C	1502180901	Ethylbenzene	ND	ug/L	1.0	0.20		
2/10/2015	8260C	1502180901	Dichloromethane	ND	ug/L	1.0	0.60		
2/10/2015	8260C	1502180901	Methylcyclohexane	ND	ug/L	10	0.27		
2/10/2015	8260C	1502180901	Chloromethane	ND	ug/L	2.0	0.21		

Analytical Results for Sampling Events at JER-1-488

Event Date	Analysis Method	Sample	Constituent	Result	Units	Quant Limit	Det Limit	Extract Efficiency	QA Flag
2/10/2015	8260C	1502180901	Cyclohexane	ND	ug/L	10	0.25		
2/10/2015	8260C	1502180901	Dibromochloromethane	ND	ug/L	1.0	0.31		
2/10/2015	8260C	1502180901	Vinyl Acetate	ND	ug/L	5.0	1.1		
2/10/2015	8260C	1502180901	Chloroform	ND	ug/L	1.0	0.25		
2/10/2015	8260C	1502180901	Dichlorofluoromethane (CFC 21)	ND	ug/L	1.0	0.24		
2/10/2015	8260C	1502180901	Iodomethane	ND	ug/L	5.0	0.98		
2/10/2015	8260C	1502180901	Methacrylonitrile	ND	ug/L	5.0	0.50		
2/10/2015	8260C	1502180901	Methyl Methacrylate	ND	ug/L	2.0	0.62		
2/10/2015	8260C	1502180901	Methyl tert-Butyl Ether	ND	ug/L	10	0.29		
2/10/2015	8260C	1502180901	Dichlorodifluoromethane (CFC 12)	ND	ug/L	1.0	0.46		
2/10/2015	8260C	1502180901	1,1-Dichloroethene	ND	ug/L	1.0	0.57		
2/10/2015	8260C	1502180901	Dibromomethane	ND	ug/L	1.0	0.32		
2/10/2015	8260C	1502180901	Vinyl Chloride	ND	ug/L	1.0	0.32		
2/10/2015	8260C	1502180901	Tetrachloroethene (PCE)	ND	ug/L	1.0	0.30		
2/10/2015	8260C	1502180901	Tetrahydrofuran (THF)	ND	ug/L	5.0	0.96		
2/10/2015	8260C	1502180901	Toluene	ND	ug/L	1.0	0.20		
2/10/2015	8260C	1502180901	Trichloroethene (TCE)	1.4	ug/L	1.0	0.22		
2/10/2015	8260C	1502180901	Trichlorofluoromethane (CFC 11)	ND	ug/L	1.0	0.20		
2/10/2015	8260C	1502180901	Ethyl Methacrylate	ND	ug/L	2.0	0.44		
2/10/2015	8260C	1502180901	Bromomethane	ND	ug/L	2.0	0.29		
2/10/2015	8260C	1502180901	cis-1,2-Dichloroethene	ND	ug/L	1.0	0.30		
2/10/2015	8260C	1502180901	Styrene	ND	ug/L	1.0	0.20		
2/10/2015	8260C	1502180901	trans-1,3-Dichloropropene	ND	ug/L	1.0	0.20		
2/10/2015	8260C	1502180901	cis-1,3-Dichloropropene	ND	ug/L	1.0	0.24		
2/10/2015	8260C	1502180901	o-Xylene	ND	ug/L	1.0	0.20		
2/10/2015	8260C	1502180901	Chloroethane	ND	ug/L	2.0	0.24		
2/10/2015	8260C	1502180901	trans-1,4-Dichloro-2-butene	ND	ug/L	1.0	0.70		
2/10/2015	8260C	1502180901	2-Chloro-1,3-butadiene	ND	ug/L	1.0	0.27		
2/10/2015	8260C	1502180901	Propionitrile	ND	ug/L	5.0	3.1		
2/10/2015	TAP 01-04	1502180902	N-Nitrodimethylamine	ND	ng/L	0.48	0.19		
2/10/2015	TAP 01-04	1502180902	N-Nitrosodimethylamine	ND	ng/L	0.48	0.31		
2/10/2015	SW9060	1502180903	Total Organic Carbon	ND	mg/l	1	0.1611		
2/10/2015	SM 2540 C	1502180904	Total Dissolved Solids (TDS)	755	mg/L	10	5		
2/10/2015	6010C	1502180905	Copper, Total	ND	mg/L	0.020	0.004		
2/10/2015	6010C	1502180905	Nickel, Total	ND	mg/L	0.040	0.002		
2/10/2015	6010C	1502180905	Potassium, Total	3.6	mg/L	2.0	0.2		

Analytical Results for Sampling Events at JER-1-488

Event Date	Analysis Method	Sample	Constituent	Result	Units	Quant Limit	Det Limit	Extract Efficiency	QA Flag
2/10/2015	6010C	1502180905	Selenium, Total	0.005	mg/L	0.010	0.003		J
2/10/2015	6010C	1502180905	Sodium, Total	49	mg/L	1.0	0.09		
2/10/2015	6020A	1502180905	Thallium, Total	0.00008	mg/L	0.0010	0.00004		J
2/10/2015	6010C	1502180905	Tin, Total	ND	mg/L	0.50	0.05		
2/10/2015	6010C	1502180905	Zinc, Total	0.16	mg/L	0.020	0.005		
2/10/2015	6010C	1502180905	Strontium, Total	2.25	mg/L	0.10	0.002		
2/10/2015	6010C	1502180905	Aluminum, Total	ND	mg/L	0.10	0.03		
2/10/2015	6010C	1502180905	Manganese, Total	0.005	mg/L	0.010	0.002		J
2/10/2015	7470A	1502180905	Mercury, Total	0.00011	mg/L	0.00020	0.00003		J
2/10/2015	6010C	1502180905	Vanadium, Total	0.003	mg/L	0.050	0.0007		J
2/10/2015	6010C	1502180905	Chromium, Total	ND	mg/L	0.010	0.0009		
2/10/2015	6010C	1502180905	Molybdenum, Total	0.009	mg/L	0.025	0.002		J
2/10/2015	6020A	1502180905	Arsenic, Total	0.0008	mg/L	0.0010	0.0003		J
2/10/2015	6010C	1502180905	Barium, Total	0.019	mg/L	0.020	0.004		J
2/10/2015	6010C	1502180905	Beryllium, Total	ND	mg/L	0.0030	0.0002		
2/10/2015	6010C	1502180905	Boron, Total	0.09	mg/L	0.20	0.03		J RB
2/10/2015	6010C	1502180905	Calcium, Total	93.9	mg/L	1.0	0.2		
2/10/2015	6010C	1502180905	Cobalt, Total	ND	mg/L	0.050	0.002		
2/10/2015	6020A	1502180905	Antimony, Total	0.0004	mg/L	0.0010	0.0002		J RB
2/10/2015	6010C	1502180905	Iron, Total	ND	mg/L	0.10	0.02		
2/10/2015	6010C	1502180905	Silver, Total	ND	mg/L	0.010	0.0009		
2/10/2015	6010C	1502180905	Lead, Total	ND	mg/L	0.050	0.002		
2/10/2015	6010C	1502180905	Magnesium, Total	55.9	mg/L	1.0	0.02		
2/10/2015	6010C	1502180905	Cadmium, Total	ND	mg/L	0.0050	0.0005		
2/10/2015	353.2	1502180906	Nitrate+Nitrite as Nitrogen	0.763	mg/L	0.050	0.002		
2/10/2015	PARAMS	1502180930	pH	8.60	NA	NA	NA		
2/10/2015	PARAMS	1502180930	Conductivity	952	µS/cm	NA	NA		
2/10/2015	PARAMS	1502180930	Turbidity	0.36	NTU	NA	NA		
2/10/2015	PARAMS	1502180930	Temperature	23.79	ºC	NA	NA		
2/10/2015	8260C	1502180931	1,2,3-Trichloropropane	ND	ug/L	1.0	0.70		
2/10/2015	8260C	1502180931	1,2-Dichloropropane	ND	ug/L	1.0	0.20		
2/10/2015	8260C	1502180931	3-Chloro-1-propene (Allyl Chloride)	ND	ug/L	2.0	0.26		
2/10/2015	8260C	1502180931	2-Propanol	ND	ug/L	50	8.6		
2/10/2015	8260C	1502180931	2-Methyl-1-propanol (Isobutyl Alcohol)	ND	ug/L	100	11		
2/10/2015	8260C	1502180931	2-Hexanone	ND	ug/L	5.0	1.7		
2/10/2015	8260C	1502180931	2-Butanone (MEK)	ND	ug/L	5.0	0.81		

Analytical Results for Sampling Events at JER-1-488

Event Date	Analysis Method	Sample	Constituent	Result	Units	Quant Limit	Det Limit	Extract Efficiency	QA Flag
2/10/2015	8260C	1502180931	1,1,1,2-Tetrachloroethane	ND	ug/L	1.0	0.22		
2/10/2015	8260C	1502180931	1,1,2-Trichloro-1,2,2-Trifluoroethane	ND	ug/L	1.0	0.31		
2/10/2015	8260C	1502180931	1,4-Dioxane	ND	ug/L	100	20		
2/10/2015	8260C	1502180931	1,1-Dichloroethane (1,1-DCA)	ND	ug/L	1.0	0.20		
2/10/2015	8260C	1502180931	1,2-Dichloroethane	ND	ug/L	1.0	0.36		
2/10/2015	8260C	1502180931	1,2-Dibromoethane	ND	ug/L	1.0	0.24		
2/10/2015	8260C	1502180931	1,2-Dibromo-3-chloropropane (DBCP)	ND	ug/L	2.0	0.74		
2/10/2015	8260C	1502180931	1,1,1-Trichloroethane (TCA)	ND	ug/L	1.0	0.36		
2/10/2015	8260C	1502180931	2-Chloro-1,3-butadiene	ND	ug/L	1.0	0.27		
2/10/2015	8260C	1502180931	Bromoform	ND	ug/L	1.0	0.42		
2/10/2015	8260C	1502180931	Benzene	ND	ug/L	1.0	0.20		
2/10/2015	8260C	1502180931	1,1,2-Trichloroethane	ND	ug/L	1.0	0.34		
2/10/2015	8260C	1502180931	trans-1,3-Dichloropropene	ND	ug/L	1.0	0.20		
2/10/2015	8260C	1502180931	trans-1,4-Dichloro-2-butene	ND	ug/L	1.0	0.70		
2/10/2015	8260C	1502180931	Trichlorofluoromethane (CFC 11)	ND	ug/L	1.0	0.20		
2/10/2015	8260C	1502180931	1,2-Dichloro-1,1,2-trifluoroethane (CFC 123a)	ND	ug/L	1.0	0.21		
2/10/2015	8260C	1502180931	1,1,2,2-Tetrachloroethane	ND	ug/L	1.0	0.25		
2/10/2015	8260C	1502180931	m,p-Xylenes	ND	ug/L	2.0	0.33		
2/10/2015	8260C	1502180931	Toluene	ND	ug/L	1.0	0.20		
2/10/2015	8260C	1502180931	1,1-Dichloroethene	ND	ug/L	1.0	0.57		
2/10/2015	8260C	1502180931	4-Methyl-2-pentanone	ND	ug/L	5.0	0.67		
2/10/2015	8260C	1502180931	Acetone	ND	ug/L	10	1.3		
2/10/2015	8260C	1502180931	Acetonitrile	ND	ug/L	25	4.7		
2/10/2015	8260C	1502180931	Acrylonitrile	ND	ug/L	5.0	1.4		
2/10/2015	8260C	1502180931	Bromodichloromethane	ND	ug/L	1.0	0.32		
2/10/2015	8260C	1502180931	trans-1,2-Dichloroethene	ND	ug/L	1.0	0.33		
2/10/2015	8260C	1502180931	Carbon Tetrachloride	ND	ug/L	1.0	0.45		
2/10/2015	8260C	1502180931	Styrene	ND	ug/L	1.0	0.20		
2/10/2015	8260C	1502180931	Dichlorodifluoromethane (CFC 12)	ND	ug/L	1.0	0.46		
2/10/2015	8260C	1502180931	Dibromomethane	ND	ug/L	1.0	0.32		
2/10/2015	8260C	1502180931	Dibromochloromethane	ND	ug/L	1.0	0.31		
2/10/2015	8260C	1502180931	Cyclohexane	ND	ug/L	10	0.25		
2/10/2015	8260C	1502180931	2,2-Dichloro-1,1,1-trifluoroethane (CFC 123)	ND	ug/L	1.0	0.32		
2/10/2015	8260C	1502180931	Carbon Disulfide	ND	ug/L	1.0	0.22		
2/10/2015	8260C	1502180931	Vinyl Chloride	ND	ug/L	1.0	0.32		
2/10/2015	8260C	1502180931	Bromomethane	ND	ug/L	2.0	0.29		
2/10/2015	8260C	1502180931	Chlorobenzene	ND	ug/L	1.0	0.29		
2/10/2015	8260C	1502180931	Ethyl Methacrylate	ND	ug/L	2.0	0.44		

Analytical Results for Sampling Events at JER-1-488

Event Date	Analysis Method	Sample	Constituent	Result	Units	Quant Limit	Det Limit	Extract Efficiency	QA Flag
2/10/2015	8260C	1502180931	Chloroform	ND	ug/L	1.0	0.25		
2/10/2015	8260C	1502180931	Chloroethane	ND	ug/L	2.0	0.24		
2/10/2015	8260C	1502180931	cis-1,2-Dichloroethene	ND	ug/L	1.0	0.30		
2/10/2015	8260C	1502180931	Chloromethane	ND	ug/L	2.0	0.21		
2/10/2015	8260C	1502180931	Propionitrile	ND	ug/L	5.0	3.1		
2/10/2015	8260C	1502180931	Tetrahydrofuran (THF)	ND	ug/L	5.0	0.96		
2/10/2015	8260C	1502180931	Acrolein	ND	ug/L	10	3.0		
2/10/2015	8260C	1502180931	Ethylbenzene	ND	ug/L	1.0	0.20		
2/10/2015	8260C	1502180931	Iodomethane	ND	ug/L	5.0	0.98		
2/10/2015	8260C	1502180931	Methacrylonitrile	ND	ug/L	5.0	0.50		
2/10/2015	8260C	1502180931	Methyl Methacrylate	ND	ug/L	2.0	0.62		
2/10/2015	8260C	1502180931	o-Xylene	ND	ug/L	1.0	0.20		
2/10/2015	8260C	1502180931	Methylcyclohexane	ND	ug/L	10	0.27		
2/10/2015	8260C	1502180931	cis-1,3-Dichloropropene	ND	ug/L	1.0	0.24		
2/10/2015	8260C	1502180931	Dichloromethane	ND	ug/L	1.0	0.60		
2/10/2015	8260C	1502180931	Tetrachloroethene (PCE)	ND	ug/L	1.0	0.30		
2/10/2015	8260C	1502180931	Dichlorofluoromethane (CFC 21)	ND	ug/L	1.0	0.24		
2/10/2015	8260C	1502180931	Trichloroethene (TCE)	0.94	ug/L	1.0	0.22		J
2/10/2015	8260C	1502180931	Vinyl Acetate	ND	ug/L	5.0	1.1		
2/10/2015	8260C	1502180931	Methyl tert-Butyl Ether	ND	ug/L	10	0.29		
2/10/2015	TAP 01-04	1502180932	N-Nitrosodimethylamine	ND	ng/L	0.48	0.31		
2/10/2015	TAP 01-04	1502180932	N-Nitrodimethylamine	ND	ng/L	0.48	0.19		
2/10/2015	SW9060	1502180933	Total Organic Carbon	ND	mg/l	1	0.1611		
2/10/2015	SM 2540 C	1502180934	Total Dissolved Solids (TDS)	761	mg/L	10	5		
2/10/2015	6010C	1502180935	Strontium, Total	2.25	mg/L	0.10	0.002		
2/10/2015	7470A	1502180935	Mercury, Total	ND	mg/L	0.00020	0.00003		
2/10/2015	6010C	1502180935	Molybdenum, Total	0.009	mg/L	0.025	0.002		J
2/10/2015	6010C	1502180935	Nickel, Total	ND	mg/L	0.040	0.002		
2/10/2015	6010C	1502180935	Potassium, Total	3.6	mg/L	2.0	0.2		
2/10/2015	6010C	1502180935	Silver, Total	ND	mg/L	0.010	0.0009		
2/10/2015	6010C	1502180935	Manganese, Total	0.003	mg/L	0.010	0.002		J
2/10/2015	6020A	1502180935	Thallium, Total	0.00008	mg/L	0.0010	0.00004		J
2/10/2015	6010C	1502180935	Tin, Total	ND	mg/L	0.50	0.05		
2/10/2015	6010C	1502180935	Vanadium, Total	0.003	mg/L	0.050	0.0007		J
2/10/2015	6010C	1502180935	Zinc, Total	0.094	mg/L	0.020	0.005		
2/10/2015	6010C	1502180935	Selenium, Total	0.004	mg/L	0.010	0.003		J

Analytical Results for Sampling Events at JER-1-488

Event Date	Analysis Method	Sample	Constituent	Result	Units	Quant Limit	Det Limit	Extract Efficiency	QA Flag
2/10/2015	6020A	1502180935	Arsenic, Total	0.0007	mg/L	0.0010	0.0003		J
2/10/2015	6010C	1502180935	Calcium, Total	93.9	mg/L	1.0	0.2		
2/10/2015	6020A	1502180935	Antimony, Total	0.0005	mg/L	0.0010	0.0002		J RB
2/10/2015	6010C	1502180935	Barium, Total	0.019	mg/L	0.020	0.004		J
2/10/2015	6010C	1502180935	Beryllium, Total	ND	mg/L	0.0030	0.0002		
2/10/2015	6010C	1502180935	Sodium, Total	48.8	mg/L	1.0	0.09		
2/10/2015	6010C	1502180935	Cadmium, Total	ND	mg/L	0.0050	0.0005		
2/10/2015	6010C	1502180935	Chromium, Total	ND	mg/L	0.010	0.0009		
2/10/2015	6010C	1502180935	Cobalt, Total	ND	mg/L	0.050	0.002		
2/10/2015	6010C	1502180935	Aluminum, Total	ND	mg/L	0.10	0.03		
2/10/2015	6010C	1502180935	Copper, Total	ND	mg/L	0.020	0.004		
2/10/2015	6010C	1502180935	Iron, Total	ND	mg/L	0.10	0.02		
2/10/2015	6010C	1502180935	Lead, Total	ND	mg/L	0.050	0.002		
2/10/2015	6010C	1502180935	Magnesium, Total	55.5	mg/L	1.0	0.02		
2/10/2015	6010C	1502180935	Boron, Total	0.09	mg/L	0.20	0.03		J RB
2/10/2015	353.2	1502180936	Nitrate+Nitrite as Nitrogen	0.76	mg/L	0.050	0.002		
2/10/2015	PARAMS	1502181425	pH	8.68	NA	NA	NA		
2/10/2015	PARAMS	1502181425	Temperature	24.18	ºC	NA	NA		
2/10/2015	PARAMS	1502181425	Turbidity	0.61	NTU	NA	NA		
2/10/2015	PARAMS	1502181425	Conductivity	953	µS/cm	NA	NA		
2/10/2015	8260C	1502181430	1,1,1-Trichloroethane (TCA)	ND	ug/L	1.0	0.36		
2/10/2015	8260C	1502181430	1,2-Dichloro-1,1,2-trifluoroethane (CFC 123a)	ND	ug/L	1.0	0.21		
2/10/2015	8260C	1502181430	Ethyl Methacrylate	ND	ug/L	2.0	0.44		
2/10/2015	8260C	1502181430	Methacrylonitrile	ND	ug/L	5.0	0.50		
2/10/2015	8260C	1502181430	trans-1,2-Dichloroethene	ND	ug/L	1.0	0.33		
2/10/2015	8260C	1502181430	1,2-Dibromoethane	ND	ug/L	1.0	0.24		
2/10/2015	8260C	1502181430	2-Methyl-1-propanol (Isobutyl Alcohol)	ND	ug/L	100	11		
2/10/2015	8260C	1502181430	1,2-Dichloropropane	ND	ug/L	1.0	0.20		
2/10/2015	8260C	1502181430	m,p-Xylenes	ND	ug/L	2.0	0.33		
2/10/2015	8260C	1502181430	1,1,2,2-Tetrachloroethane	ND	ug/L	1.0	0.25		
2/10/2015	8260C	1502181430	1,1,2-Trichloroethane	ND	ug/L	1.0	0.34		
2/10/2015	8260C	1502181430	1,1,2-Trichloro-1,2,2-Trifluoroethane	ND	ug/L	1.0	0.31		
2/10/2015	8260C	1502181430	1,1-Dichloroethane (1,1-DCA)	ND	ug/L	1.0	0.20		
2/10/2015	8260C	1502181430	1,1-Dichloroethene	ND	ug/L	1.0	0.57		
2/10/2015	8260C	1502181430	3-Chloro-1-propene (Allyl Chloride)	ND	ug/L	2.0	0.26		
2/10/2015	8260C	1502181430	Toluene	ND	ug/L	1.0	0.20		

Analytical Results for Sampling Events at JER-1-488

Event Date	Analysis Method	Sample	Constituent	Result	Units	Quant Limit	Det Limit	Extract Efficiency	QA Flag
2/10/2015	8260C	1502181430	Methyl tert-Butyl Ether	ND	ug/L	10	0.29		
2/10/2015	8260C	1502181430	trans-1,4-Dichloro-2-butene	ND	ug/L	1.0	0.70		
2/10/2015	8260C	1502181430	Methylcyclohexane	ND	ug/L	10	0.27		
2/10/2015	8260C	1502181430	Methyl Methacrylate	ND	ug/L	2.0	0.62		
2/10/2015	8260C	1502181430	Propionitrile	ND	ug/L	5.0	3.1		
2/10/2015	8260C	1502181430	Styrene	ND	ug/L	1.0	0.20		
2/10/2015	8260C	1502181430	trans-1,3-Dichloropropene	ND	ug/L	1.0	0.20		
2/10/2015	8260C	1502181430	Tetrahydrofuran (THF)	ND	ug/L	5.0	0.96		
2/10/2015	8260C	1502181430	o-Xylene	ND	ug/L	1.0	0.20		
2/10/2015	8260C	1502181430	Trichloroethene (TCE)	0.72	ug/L	1.0	0.22		J
2/10/2015	8260C	1502181430	Vinyl Acetate	ND	ug/L	5.0	1.1		
2/10/2015	8260C	1502181430	Vinyl Chloride	ND	ug/L	1.0	0.32		
2/10/2015	8260C	1502181430	cis-1,2-Dichloroethene	ND	ug/L	1.0	0.30		
2/10/2015	8260C	1502181430	cis-1,3-Dichloropropene	ND	ug/L	1.0	0.24		
2/10/2015	8260C	1502181430	4-Methyl-2-pentanone	ND	ug/L	5.0	0.67		
2/10/2015	8260C	1502181430	Tetrachloroethene (PCE)	ND	ug/L	1.0	0.30		
2/10/2015	8260C	1502181430	Bromomethane	ND	ug/L	2.0	0.29		
2/10/2015	8260C	1502181430	Cyclohexane	ND	ug/L	10	0.25		
2/10/2015	8260C	1502181430	2-Propanol	ND	ug/L	50	8.6		
2/10/2015	8260C	1502181430	Chloroform	ND	ug/L	1.0	0.25		
2/10/2015	8260C	1502181430	Acetonitrile	ND	ug/L	25	4.7		
2/10/2015	8260C	1502181430	Chlorobenzene	ND	ug/L	1.0	0.29		
2/10/2015	8260C	1502181430	Acetone	ND	ug/L	10	1.3		
2/10/2015	8260C	1502181430	Carbon Disulfide	ND	ug/L	1.0	0.22		
2/10/2015	8260C	1502181430	Dichlorodifluoromethane (CFC 12)	ND	ug/L	1.0	0.46		
2/10/2015	8260C	1502181430	Bromoform	ND	ug/L	1.0	0.42		
2/10/2015	8260C	1502181430	Bromodichloromethane	ND	ug/L	1.0	0.32		
2/10/2015	8260C	1502181430	Benzene	ND	ug/L	1.0	0.20		
2/10/2015	8260C	1502181430	Acrylonitrile	ND	ug/L	5.0	1.4		
2/10/2015	8260C	1502181430	Acrolein	ND	ug/L	10	3.0		
2/10/2015	8260C	1502181430	Chloromethane	ND	ug/L	2.0	0.21		
2/10/2015	8260C	1502181430	Carbon Tetrachloride	ND	ug/L	1.0	0.45		
2/10/2015	8260C	1502181430	1,4-Dioxane	ND	ug/L	100	20		
2/10/2015	8260C	1502181430	Trichlorofluoromethane (CFC 11)	ND	ug/L	1.0	0.20		
2/10/2015	8260C	1502181430	1,2-Dichloroethane	ND	ug/L	1.0	0.36		
2/10/2015	8260C	1502181430	Ethylbenzene	ND	ug/L	1.0	0.20		
2/10/2015	8260C	1502181430	Iodomethane	ND	ug/L	5.0	0.98		
2/10/2015	8260C	1502181430	2-Hexanone	ND	ug/L	5.0	1.7		

Analytical Results for Sampling Events at JER-1-488

Event Date	Analysis Method	Sample	Constituent	Result	Units	Quant Limit	Det Limit	Extract Efficiency	QA Flag
2/10/2015	8260C	1502181430	2-Chloro-1,3-butadiene	ND	ug/L	1.0	0.27		
2/10/2015	8260C	1502181430	Dibromochloromethane	ND	ug/L	1.0	0.31		
2/10/2015	8260C	1502181430	2,2-Dichloro-1,1,1-trifluoroethane (CFC 123)	ND	ug/L	1.0	0.32		
2/10/2015	8260C	1502181430	Dibromomethane	ND	ug/L	1.0	0.32		
2/10/2015	8260C	1502181430	1,2,3-Trichloropropane	ND	ug/L	1.0	0.70		
2/10/2015	8260C	1502181430	Chloroethane	ND	ug/L	2.0	0.24		
2/10/2015	8260C	1502181430	1,1,1,2-Tetrachloroethane	ND	ug/L	1.0	0.22		
2/10/2015	8260C	1502181430	Dichloromethane	ND	ug/L	1.0	0.60		
2/10/2015	8260C	1502181430	Dichlorofluoromethane (CFC 21)	ND	ug/L	1.0	0.24		
2/10/2015	8260C	1502181430	1,2-Dibromo-3-chloropropane (DBCP)	ND	ug/L	2.0	0.74		
2/10/2015	8260C	1502181430	2-Butanone (MEK)	ND	ug/L	5.0	0.81		
2/10/2015	TAP 01-04	1502181431	N-Nitrodimethylamine	ND	ng/L	0.48	0.19		
2/10/2015	TAP 01-04	1502181431	N-Nitrosodimethylamine	ND	ng/L	0.48	0.31		
2/10/2015	SW9060	1502181432	Total Organic Carbon	ND	mg/l	1	0.1611		
2/10/2015	SM 2540 C	1502181433	Total Dissolved Solids (TDS)	761	mg/L	10	5		
2/10/2015	6010C	1502181434	Beryllium, Total	ND	mg/L	0.0030	0.0002		
2/10/2015	6020A	1502181434	Antimony, Total	0.0002	mg/L	0.0010	0.0002		J RB
2/10/2015	6020A	1502181434	Arsenic, Total	0.0005	mg/L	0.0010	0.0003		J
2/10/2015	6010C	1502181434	Barium, Total	0.019	mg/L	0.020	0.004		J
2/10/2015	6010C	1502181434	Nickel, Total	ND	mg/L	0.040	0.002		
2/10/2015	6010C	1502181434	Boron, Total	0.09	mg/L	0.20	0.03		J RB
2/10/2015	6010C	1502181434	Lead, Total	ND	mg/L	0.050	0.002		
2/10/2015	6010C	1502181434	Copper, Total	ND	mg/L	0.020	0.004		
2/10/2015	6010C	1502181434	Vanadium, Total	0.003	mg/L	0.050	0.0007		J
2/10/2015	6010C	1502181434	Iron, Total	ND	mg/L	0.10	0.02		
2/10/2015	6010C	1502181434	Cobalt, Total	ND	mg/L	0.050	0.002		
2/10/2015	6010C	1502181434	Chromium, Total	ND	mg/L	0.010	0.0009		
2/10/2015	6010C	1502181434	Calcium, Total	97.8	mg/L	1.0	0.2		
2/10/2015	6010C	1502181434	Selenium, Total	0.004	mg/L	0.010	0.003		J
2/10/2015	6010C	1502181434	Magnesium, Total	57.2	mg/L	1.0	0.02		
2/10/2015	6010C	1502181434	Tin, Total	ND	mg/L	0.50	0.05		
2/10/2015	6020A	1502181434	Thallium, Total	0.00005	mg/L	0.0010	0.00004		J
2/10/2015	6010C	1502181434	Strontium, Total	2.34	mg/L	0.10	0.002		
2/10/2015	6010C	1502181434	Aluminum, Total	ND	mg/L	0.10	0.03		
2/10/2015	6010C	1502181434	Silver, Total	ND	mg/L	0.010	0.0009		
2/10/2015	6010C	1502181434	Cadmium, Total	ND	mg/L	0.0050	0.0005		

Analytical Results for Sampling Events at JER-1-488

Event Date	Analysis Method	Sample	Constituent	Result	Units	Quant Limit	Det Limit	Extract Efficiency	QA Flag
2/10/2015	6010C	1502181434	Potassium, Total	3.7	mg/L	2.0	0.2		
2/10/2015	7470A	1502181434	Mercury, Total	ND	mg/L	0.00020	0.00003		
2/10/2015	6010C	1502181434	Molybdenum, Total	0.009	mg/L	0.025	0.002		J
2/10/2015	6010C	1502181434	Zinc, Total	0.091	mg/L	0.020	0.005		
2/10/2015	6010C	1502181434	Manganese, Total	0.005	mg/L	0.010	0.002		J
2/10/2015	6010C	1502181434	Sodium, Total	50.6	mg/L	1.0	0.09		
2/10/2015	353.2	1502181435	Nitrate+Nitrite as Nitrogen	0.769	mg/L	0.050	0.002		
2/10/2015	PARAMS	1502191000	Conductivity	963	µS/cm	NA	NA		
2/10/2015	PARAMS	1502191000	Temperature	24.23	ºC	NA	NA		
2/10/2015	PARAMS	1502191000	pH	8.70	NA	NA	NA		
2/10/2015	PARAMS	1502191000	Turbidity	0.40	NTU	NA	NA		
2/10/2015	8260C	1502191001	Trichloroethene (TCE)	0.43	ug/L	1.0	0.22		J
2/10/2015	8260C	1502191001	Acrolein	ND	ug/L	10	3.0		
2/10/2015	8260C	1502191001	Acetonitrile	ND	ug/L	25	4.7		
2/10/2015	8260C	1502191001	Tetrahydrofuran (THF)	ND	ug/L	5.0	0.96		
2/10/2015	8260C	1502191001	trans-1,2-Dichloroethene	ND	ug/L	1.0	0.33		
2/10/2015	8260C	1502191001	Bromomethane	ND	ug/L	2.0	0.29		
2/10/2015	8260C	1502191001	Trichlorofluoromethane (CFC 11)	ND	ug/L	1.0	0.20		
2/10/2015	8260C	1502191001	Dichlorodifluoromethane (CFC 12)	ND	ug/L	1.0	0.46		
2/10/2015	8260C	1502191001	Toluene	ND	ug/L	1.0	0.20		
2/10/2015	8260C	1502191001	Tetrachloroethene (PCE)	ND	ug/L	1.0	0.30		
2/10/2015	8260C	1502191001	Propionitrile	ND	ug/L	5.0	3.1		
2/10/2015	8260C	1502191001	Methylcyclohexane	ND	ug/L	10	0.27		
2/10/2015	8260C	1502191001	Dibromochloromethane	ND	ug/L	1.0	0.31		
2/10/2015	8260C	1502191001	Methyl Methacrylate	ND	ug/L	2.0	0.62		
2/10/2015	8260C	1502191001	Methacrylonitrile	ND	ug/L	5.0	0.50		
2/10/2015	8260C	1502191001	Cyclohexane	ND	ug/L	10	0.25		
2/10/2015	8260C	1502191001	Vinyl Acetate	ND	ug/L	5.0	1.1		
2/10/2015	8260C	1502191001	Chloroethane	ND	ug/L	2.0	0.24		
2/10/2015	8260C	1502191001	o-Xylene	ND	ug/L	1.0	0.20		
2/10/2015	8260C	1502191001	m,p-Xylenes	ND	ug/L	2.0	0.33		
2/10/2015	8260C	1502191001	cis-1,2-Dichloroethene	ND	ug/L	1.0	0.30		
2/10/2015	8260C	1502191001	cis-1,3-Dichloropropene	ND	ug/L	1.0	0.24		
2/10/2015	8260C	1502191001	Acrylonitrile	ND	ug/L	5.0	1.4		
2/10/2015	8260C	1502191001	Chloromethane	ND	ug/L	2.0	0.21		
2/10/2015	8260C	1502191001	Vinyl Chloride	ND	ug/L	1.0	0.32		

Analytical Results for Sampling Events at JER-1-488

Event Date	Analysis Method	Sample	Constituent	Result	Units	Quant Limit	Det Limit	Extract Efficiency	QA Flag
2/10/2015	8260C	1502191001	Chloroform	ND	ug/L	1.0	0.25		
2/10/2015	8260C	1502191001	Chlorobenzene	ND	ug/L	1.0	0.29		
2/10/2015	8260C	1502191001	Carbon Tetrachloride	ND	ug/L	1.0	0.45		
2/10/2015	8260C	1502191001	Carbon Disulfide	ND	ug/L	1.0	0.22		
2/10/2015	8260C	1502191001	Dibromomethane	ND	ug/L	1.0	0.32		
2/10/2015	8260C	1502191001	Benzene	ND	ug/L	1.0	0.20		
2/10/2015	8260C	1502191001	Bromodichloromethane	ND	ug/L	1.0	0.32		
2/10/2015	8260C	1502191001	1,1-Dichloroethene	ND	ug/L	1.0	0.57		
2/10/2015	8260C	1502191001	1,2-Dibromoethane	ND	ug/L	1.0	0.24		
2/10/2015	8260C	1502191001	1,4-Dioxane	ND	ug/L	100	20		
2/10/2015	8260C	1502191001	trans-1,3-Dichloropropene	ND	ug/L	1.0	0.20		
2/10/2015	8260C	1502191001	1,1,1,2-Tetrachloroethane	ND	ug/L	1.0	0.22		
2/10/2015	8260C	1502191001	1,1,1-Trichloroethane (TCA)	ND	ug/L	1.0	0.36		
2/10/2015	8260C	1502191001	1,2-Dibromo-3-chloropropane (DBCP)	ND	ug/L	2.0	0.74		
2/10/2015	8260C	1502191001	1,1,2-Trichloro-1,2,2-Trifluoroethane	ND	ug/L	1.0	0.31		
2/10/2015	8260C	1502191001	1,1,2-Trichloroethane	ND	ug/L	1.0	0.34		
2/10/2015	8260C	1502191001	1,2,3-Trichloropropane	ND	ug/L	1.0	0.70		
2/10/2015	8260C	1502191001	1,2-Dichloro-1,1,2-trifluoroethane (CFC 123a)	ND	ug/L	1.0	0.21		
2/10/2015	8260C	1502191001	trans-1,4-Dichloro-2-butene	ND	ug/L	1.0	0.70		
2/10/2015	8260C	1502191001	1,2-Dichloropropane	ND	ug/L	1.0	0.20		
2/10/2015	8260C	1502191001	Bromoform	ND	ug/L	1.0	0.42		
2/10/2015	8260C	1502191001	Iodomethane	ND	ug/L	5.0	0.98		
2/10/2015	8260C	1502191001	1,1,2,2-Tetrachloroethane	ND	ug/L	1.0	0.25		
2/10/2015	8260C	1502191001	4-Methyl-2-pentanone	ND	ug/L	5.0	0.67		
2/10/2015	8260C	1502191001	Dichloromethane	ND	ug/L	1.0	0.60		
2/10/2015	8260C	1502191001	Dichlorofluoromethane (CFC 21)	ND	ug/L	1.0	0.24		
2/10/2015	8260C	1502191001	Methyl tert-Butyl Ether	ND	ug/L	10	0.29		
2/10/2015	8260C	1502191001	2,2-Dichloro-1,1,1-trifluoroethane (CFC 123)	ND	ug/L	1.0	0.32		
2/10/2015	8260C	1502191001	2-Propanol	ND	ug/L	50	8.6		
2/10/2015	8260C	1502191001	1,1-Dichloroethane (1,1-DCA)	ND	ug/L	1.0	0.20		
2/10/2015	8260C	1502191001	1,2-Dichloroethane	ND	ug/L	1.0	0.36		
2/10/2015	8260C	1502191001	Ethylbenzene	ND	ug/L	1.0	0.20		
2/10/2015	8260C	1502191001	Ethyl Methacrylate	ND	ug/L	2.0	0.44		
2/10/2015	8260C	1502191001	Acetone	ND	ug/L	10	1.3		
2/10/2015	8260C	1502191001	2-Chloro-1,3-butadiene	ND	ug/L	1.0	0.27		
2/10/2015	8260C	1502191001	Styrene	ND	ug/L	1.0	0.20		
2/10/2015	8260C	1502191001	2-Methyl-1-propanol (Isobutyl Alcohol)	ND	ug/L	100	11		
2/10/2015	8260C	1502191001	2-Hexanone	ND	ug/L	5.0	1.7		

Analytical Results for Sampling Events at JER-1-488

Event Date	Analysis Method	Sample	Constituent	Result	Units	Quant Limit	Det Limit	Extract Efficiency	QA Flag
2/10/2015	8260C	1502191001	2-Butanone (MEK)	ND	ug/L	5.0	0.81		
2/10/2015	8260C	1502191001	3-Chloro-1-propene (Allyl Chloride)	ND	ug/L	2.0	0.26		
2/10/2015	TAP 01-04	1502191003	N-Nitrodimethylamine	ND	ng/L	0.48	0.19		
2/10/2015	TAP 01-04	1502191003	N-Nitrosodimethylamine	ND	ng/L	0.48	0.31		
2/10/2015	SW9060	1502191005	Total Organic Carbon	ND	mg/l	1	0.1611		
2/10/2015	SM 2540 C	1502191006	Total Dissolved Solids (TDS)	765	mg/L	10	5		
2/10/2015	6010C	1502191007	Calcium, Total	99	mg/L	1.0	0.2		
2/10/2015	7470A	1502191007	Mercury, Total	ND	mg/L	0.00020	0.00003		
2/10/2015	6010C	1502191007	Manganese, Total	ND	mg/L	0.010	0.002		
2/10/2015	6010C	1502191007	Magnesium, Total	58.7	mg/L	1.0	0.02		
2/10/2015	6010C	1502191007	Lead, Total	ND	mg/L	0.050	0.002		
2/10/2015	6010C	1502191007	Copper, Total	ND	mg/L	0.020	0.004		
2/10/2015	6010C	1502191007	Cobalt, Total	ND	mg/L	0.050	0.002		
2/10/2015	6010C	1502191007	Cadmium, Total	ND	mg/L	0.0050	0.0005		
2/10/2015	6010C	1502191007	Potassium, Total	3.8	mg/L	2.0	0.2		
2/10/2015	6010C	1502191007	Iron, Total	ND	mg/L	0.10	0.02		
2/10/2015	6010C	1502191007	Selenium, Total	0.005	mg/L	0.010	0.003		J
2/10/2015	6010C	1502191007	Aluminum, Total	ND	mg/L	0.10	0.03		
2/10/2015	6010C	1502191007	Chromium, Total	ND	mg/L	0.010	0.0009		
2/10/2015	6010C	1502191007	Barium, Total	0.019	mg/L	0.020	0.004		J
2/10/2015	6010C	1502191007	Nickel, Total	ND	mg/L	0.040	0.002		
2/10/2015	6020A	1502191007	Arsenic, Total	0.0007	mg/L	0.0010	0.0003		J
2/10/2015	6010C	1502191007	Tin, Total	ND	mg/L	0.50	0.05		
2/10/2015	6010C	1502191007	Boron, Total	0.09	mg/L	0.20	0.03		J RB
2/10/2015	6010C	1502191007	Vanadium, Total	0.003	mg/L	0.050	0.0007		J
2/10/2015	6020A	1502191007	Antimony, Total	0.0003	mg/L	0.0010	0.0002		J RB
2/10/2015	6010C	1502191007	Beryllium, Total	ND	mg/L	0.0030	0.0002		
2/10/2015	6010C	1502191007	Strontium, Total	2.38	mg/L	0.10	0.002		
2/10/2015	6010C	1502191007	Molybdenum, Total	0.01	mg/L	0.025	0.002		J
2/10/2015	6010C	1502191007	Sodium, Total	50.8	mg/L	1.0	0.09		
2/10/2015	6020A	1502191007	Thallium, Total	0.00006	mg/L	0.0010	0.00004		J
2/10/2015	6010C	1502191007	Silver, Total	ND	mg/L	0.010	0.0009		
2/10/2015	6010C	1502191007	Zinc, Total	0.045	mg/L	0.020	0.005		
2/10/2015	353.2	1502191008	Nitrate+Nitrite as Nitrogen	0.786	mg/L	0.050	0.002		
2/10/2015	PARAMS	1502191500	Conductivity	948	µS/cm	NA	NA		

Analytical Results for Sampling Events at JER-1-488

Event Date	Analysis Method	Sample	Constituent	Result	Units	Quant Limit	Det Limit	Extract Efficiency	QA Flag
2/10/2015	PARAMS	1502191500	pH	8.68	NA	NA	NA		
2/10/2015	PARAMS	1502191500	Turbidity	0.38	NTU	NA	NA		
2/10/2015	PARAMS	1502191500	Temperature	24.90	ºC	NA	NA		
2/10/2015	8260C	1502191501	1,4-Dioxane	ND	ug/L	100	20		
2/10/2015	8260C	1502191501	Carbon Tetrachloride	ND	ug/L	1.0	0.45		
2/10/2015	8260C	1502191501	Methyl Methacrylate	ND	ug/L	2.0	0.62		
2/10/2015	8260C	1502191501	Benzene	ND	ug/L	1.0	0.20		
2/10/2015	8260C	1502191501	Acrylonitrile	ND	ug/L	5.0	1.4		
2/10/2015	8260C	1502191501	Acrolein	ND	ug/L	10	3.0		
2/10/2015	8260C	1502191501	2-Propanol	ND	ug/L	50	8.6		
2/10/2015	8260C	1502191501	1,1,2,2-Tetrachloroethane	ND	ug/L	1.0	0.25		
2/10/2015	8260C	1502191501	3-Chloro-1-propene (Allyl Chloride)	ND	ug/L	2.0	0.26		
2/10/2015	8260C	1502191501	1,2-Dichloropropane	ND	ug/L	1.0	0.20		
2/10/2015	8260C	1502191501	2-Hexanone	ND	ug/L	5.0	1.7		
2/10/2015	8260C	1502191501	2-Chloro-1,3-butadiene	ND	ug/L	1.0	0.27		
2/10/2015	8260C	1502191501	2-Butanone (MEK)	ND	ug/L	5.0	0.81		
2/10/2015	8260C	1502191501	2,2-Dichloro-1,1,1-trifluoroethane (CFC 123)	ND	ug/L	1.0	0.32		
2/10/2015	8260C	1502191501	2-Methyl-1-propanol (Isobutyl Alcohol)	ND	ug/L	100	11		
2/10/2015	8260C	1502191501	Acetonitrile	ND	ug/L	25	4.7		
2/10/2015	8260C	1502191501	1,1,1-Trichloroethane (TCA)	ND	ug/L	1.0	0.36		
2/10/2015	8260C	1502191501	Acetone	ND	ug/L	10	1.3		
2/10/2015	8260C	1502191501	1,1,2-Trichloro-1,2,2-Trifluoroethane	ND	ug/L	1.0	0.31		
2/10/2015	8260C	1502191501	1,1-Dichloroethane (1,1-DCA)	ND	ug/L	1.0	0.20		
2/10/2015	8260C	1502191501	1,1-Dichloroethene	ND	ug/L	1.0	0.57		
2/10/2015	8260C	1502191501	1,2,3-Trichloropropane	ND	ug/L	1.0	0.70		
2/10/2015	8260C	1502191501	1,2-Dibromoethane	ND	ug/L	1.0	0.24		
2/10/2015	8260C	1502191501	1,1,1,2-Tetrachloroethane	ND	ug/L	1.0	0.22		
2/10/2015	8260C	1502191501	Iodomethane	ND	ug/L	5.0	0.98		
2/10/2015	8260C	1502191501	1,1,2-Trichloroethane	ND	ug/L	1.0	0.34		
2/10/2015	8260C	1502191501	Bromodichloromethane	ND	ug/L	1.0	0.32		
2/10/2015	8260C	1502191501	Bromoform	ND	ug/L	1.0	0.42		
2/10/2015	8260C	1502191501	1,2-Dichloroethane	ND	ug/L	1.0	0.36		
2/10/2015	8260C	1502191501	Carbon Disulfide	ND	ug/L	1.0	0.22		
2/10/2015	8260C	1502191501	4-Methyl-2-pentanone	ND	ug/L	5.0	0.67		
2/10/2015	8260C	1502191501	Bromomethane	ND	ug/L	2.0	0.29		
2/10/2015	8260C	1502191501	1,2-Dibromo-3-chloropropane (DBCP)	ND	ug/L	2.0	0.74		
2/10/2015	8260C	1502191501	Dibromomethane	ND	ug/L	1.0	0.32		

Analytical Results for Sampling Events at JER-1-488

Event Date	Analysis Method	Sample	Constituent	Result	Units	Quant Limit	Det Limit	Extract Efficiency	QA Flag
2/10/2015	8260C	1502191501	trans-1,4-Dichloro-2-butene	ND	ug/L	1.0	0.70		
2/10/2015	8260C	1502191501	Trichlorofluoromethane (CFC 11)	ND	ug/L	1.0	0.20		
2/10/2015	8260C	1502191501	Ethyl Methacrylate	ND	ug/L	2.0	0.44		
2/10/2015	8260C	1502191501	Chloroethane	ND	ug/L	2.0	0.24		
2/10/2015	8260C	1502191501	Dichloromethane	ND	ug/L	1.0	0.60		
2/10/2015	8260C	1502191501	Vinyl Chloride	ND	ug/L	1.0	0.32		
2/10/2015	8260C	1502191501	Dichlorodifluoromethane (CFC 12)	ND	ug/L	1.0	0.46		
2/10/2015	8260C	1502191501	trans-1,2-Dichloroethene	ND	ug/L	1.0	0.33		
2/10/2015	8260C	1502191501	Dibromochloromethane	ND	ug/L	1.0	0.31		
2/10/2015	8260C	1502191501	Chloromethane	ND	ug/L	2.0	0.21		
2/10/2015	8260C	1502191501	m,p-Xylenes	ND	ug/L	2.0	0.33		
2/10/2015	8260C	1502191501	Chloroform	ND	ug/L	1.0	0.25		
2/10/2015	8260C	1502191501	Cyclohexane	ND	ug/L	10	0.25		
2/10/2015	8260C	1502191501	trans-1,3-Dichloropropene	ND	ug/L	1.0	0.20		
2/10/2015	8260C	1502191501	Dichlorofluoromethane (CFC 21)	ND	ug/L	1.0	0.24		
2/10/2015	8260C	1502191501	Trichloroethene (TCE)	0.42	ug/L	1.0	0.22		J
2/10/2015	8260C	1502191501	Methacrylonitrile	ND	ug/L	5.0	0.50		
2/10/2015	8260C	1502191501	Methyl tert-Butyl Ether	ND	ug/L	10	0.29		
2/10/2015	8260C	1502191501	Methylcyclohexane	ND	ug/L	10	0.27		
2/10/2015	8260C	1502191501	Propionitrile	ND	ug/L	5.0	3.1		
2/10/2015	8260C	1502191501	Styrene	ND	ug/L	1.0	0.20		
2/10/2015	8260C	1502191501	Tetrachloroethene (PCE)	ND	ug/L	1.0	0.30		
2/10/2015	8260C	1502191501	1,2-Dichloro-1,1,2-trifluoroethane (CFC 123a)	ND	ug/L	1.0	0.21		
2/10/2015	8260C	1502191501	Toluene	ND	ug/L	1.0	0.20		
2/10/2015	8260C	1502191501	Chlorobenzene	ND	ug/L	1.0	0.29		
2/10/2015	8260C	1502191501	Ethylbenzene	ND	ug/L	1.0	0.20		
2/10/2015	8260C	1502191501	Vinyl Acetate	ND	ug/L	5.0	1.1		
2/10/2015	8260C	1502191501	cis-1,2-Dichloroethene	ND	ug/L	1.0	0.30		
2/10/2015	8260C	1502191501	cis-1,3-Dichloropropene	ND	ug/L	1.0	0.24		
2/10/2015	8260C	1502191501	o-Xylene	ND	ug/L	1.0	0.20		
2/10/2015	8260C	1502191501	Tetrahydrofuran (THF)	ND	ug/L	5.0	0.96		
2/10/2015	TAP 01-04	1502191502	N-Nitrodimethylamine	ND	ng/L	0.47	0.19		
2/10/2015	TAP 01-04	1502191502	N-Nitrosodimethylamine	ND	ng/L	0.47	0.31		
2/10/2015	SW9060	1502191503	Total Organic Carbon	ND	mg/l	1	0.1611		
2/10/2015	6010C	1502191504	Boron, Total	0.09	mg/L	0.20	0.03		J
2/10/2015	6010C	1502191504	Barium, Total	0.018	mg/L	0.020	0.004		J

Analytical Results for Sampling Events at JER-1-488

Event Date	Analysis Method	Sample	Constituent	Result	Units	Quant Limit	Det Limit	Extract Efficiency	QA Flag
2/10/2015	6010C	1502191504	Magnesium, Total	58	mg/L	1.0	0.02		
2/10/2015	6010C	1502191504	Copper, Total	ND	mg/L	0.020	0.004		
2/10/2015	6010C	1502191504	Cobalt, Total	ND	mg/L	0.050	0.002		
2/10/2015	6010C	1502191504	Chromium, Total	ND	mg/L	0.010	0.0009		
2/10/2015	6010C	1502191504	Calcium, Total	101	mg/L	5.0	0.8		
2/10/2015	6010C	1502191504	Cadmium, Total	ND	mg/L	0.0050	0.0005		
2/10/2015	6010C	1502191504	Beryllium, Total	ND	mg/L	0.0030	0.0002		
2/10/2015	6020A	1502191504	Arsenic, Total	0.0003	mg/L	0.0010	0.0003		J
2/10/2015	6020A	1502191504	Antimony, Total	0.0003	mg/L	0.0010	0.0002		J RB
2/10/2015	6010C	1502191504	Lead, Total	ND	mg/L	0.050	0.002		
2/10/2015	6010C	1502191504	Tin, Total	ND	mg/L	0.50	0.05		
2/10/2015	6010C	1502191504	Potassium, Total	4.3	mg/L	2.0	0.2		
2/10/2015	7470A	1502191504	Mercury, Total	ND	mg/L	0.00020	0.00003		
2/10/2015	6010C	1502191504	Silver, Total	ND	mg/L	0.010	0.0009		
2/10/2015	6010C	1502191504	Aluminum, Total	ND	mg/L	0.10	0.03		
2/10/2015	6010C	1502191504	Nickel, Total	ND	mg/L	0.040	0.002		
2/10/2015	6010C	1502191504	Iron, Total	ND	mg/L	0.10	0.02		
2/10/2015	6010C	1502191504	Selenium, Total	0.006	mg/L	0.010	0.003		J
2/10/2015	6010C	1502191504	Sodium, Total	54	mg/L	5.0	0.5		
2/10/2015	6010C	1502191504	Strontium, Total	2.43	mg/L	0.10	0.002		
2/10/2015	6020A	1502191504	Thallium, Total	0.00008	mg/L	0.0010	0.00004		J
2/10/2015	6010C	1502191504	Zinc, Total	0.029	mg/L	0.020	0.005		
2/10/2015	6010C	1502191504	Vanadium, Total	0.003	mg/L	0.050	0.0007		J
2/10/2015	6010C	1502191504	Manganese, Total	ND	mg/L	0.010	0.002		
2/10/2015	6010C	1502191504	Molybdenum, Total	0.009	mg/L	0.025	0.002		J
2/10/2015	353.2	1502191505	Nitrate+Nitrite as Nitrogen	0.836	mg/L	0.050	0.002		
2/10/2015	SM 2540 C	1502191506	Total Dissolved Solids (TDS)	749	mg/L	10	5		

Analytical Results for Sampling Events at JER-1-568

Event Date	Analysis Method	Sample	Constituent	Result	Units	Quant Limit	Det Limit	Extract Efficiency	QA Flag
1/7/2015	PARAMS	1501071325	Temperature	21.5	ºC	NA	NA		
1/7/2015	PARAMS	1501071325	pH	8.53	NA	NA	NA		
1/7/2015	PARAMS	1501071325	Turbidity	1.47	NTU	NA	NA		
1/7/2015	PARAMS	1501071325	Atmospheric Pressure	12.68	psia	NA	NA		
1/7/2015	PARAMS	1501071325	Formation Pressure	66.24	psia	NA	NA		
1/7/2015	PARAMS	1501071325	DTW	450.12	ft	NA	NA		
1/7/2015	PARAMS	1501071325	Conductivity	1119	µS/cm	NA	NA		
1/7/2015	8260C	1501071350	Carbon Tetrachloride	ND	ug/L	1.0	0.45		
1/7/2015	8260C	1501071350	1,2-Dibromo-3-chloropropane (DBCP)	ND	ug/L	2.0	0.74		
1/7/2015	8260C	1501071350	1,2-Dibromoethane	ND	ug/L	1.0	0.24		
1/7/2015	8260C	1501071350	1,2-Dichloroethane	ND	ug/L	1.0	0.36		
1/7/2015	8260C	1501071350	1,2-Dichloropropane	ND	ug/L	1.0	0.20		
1/7/2015	8260C	1501071350	1,4-Dioxane	ND	ug/L	100	20		
1/7/2015	8260C	1501071350	2,2-Dichloro-1,1,1-trifluoroethane (CFC 123)	ND	ug/L	1.0	0.32		
1/7/2015	8260C	1501071350	2-Butanone (MEK)	ND	ug/L	5.0	0.81		
1/7/2015	8260C	1501071350	Ethylbenzene	ND	ug/L	1.0	0.20		
1/7/2015	8260C	1501071350	Tetrachloroethene (PCE)	ND	ug/L	1.0	0.30		
1/7/2015	8260C	1501071350	Chlorobenzene	ND	ug/L	1.0	0.29		
1/7/2015	8260C	1501071350	Chloroethane	ND	ug/L	2.0	0.24		
1/7/2015	8260C	1501071350	Chloroform	ND	ug/L	1.0	0.25		
1/7/2015	8260C	1501071350	Chloromethane	ND	ug/L	2.0	0.21		
1/7/2015	8260C	1501071350	Cyclohexane	ND	ug/L	10	0.25		
1/7/2015	8260C	1501071350	1,1,2-Trichloro-1,2,2-Trifluoroethane	ND	ug/L	1.0	0.31		
1/7/2015	8260C	1501071350	cis-1,2-Dichloroethene	ND	ug/L	1.0	0.30		
1/7/2015	8260C	1501071350	1,1,1-Trichloroethane (TCA)	ND	ug/L	1.0	0.36		
1/7/2015	8260C	1501071350	1,1,1,2-Tetrachloroethane	ND	ug/L	1.0	0.22		
1/7/2015	8260C	1501071350	trans-1,3-Dichloropropene	ND	ug/L	1.0	0.20		
1/7/2015	8260C	1501071350	1,1,2-Trichloroethane	ND	ug/L	1.0	0.34		
1/7/2015	8260C	1501071350	o-Xylene	ND	ug/L	1.0	0.20		
1/7/2015	8260C	1501071350	1,2,3-Trichloropropane	ND	ug/L	1.0	0.70		
1/7/2015	8260C	1501071350	cis-1,3-Dichloropropene	ND	ug/L	1.0	0.24		
1/7/2015	8260C	1501071350	1,1-Dichloroethene	ND	ug/L	1.0	0.57		
1/7/2015	8260C	1501071350	Vinyl Chloride	ND	ug/L	1.0	0.32		
1/7/2015	8260C	1501071350	Vinyl Acetate	ND	ug/L	5.0	1.1		
1/7/2015	8260C	1501071350	trans-1,2-Dichloroethene	ND	ug/L	1.0	0.33		
1/7/2015	8260C	1501071350	Trichlorofluoromethane (CFC 11)	ND	ug/L	1.0	0.20		
1/7/2015	8260C	1501071350	1,1-Dichloroethane (1,1-DCA)	ND	ug/L	1.0	0.20		

Analytical Results for Sampling Events at JER-1-568

Event Date	Analysis Method	Sample	Constituent	Result	Units	Quant Limit	Det Limit	Extract Efficiency	QA Flag
1/7/2015	8260C	1501071350	Dichlorodifluoromethane (CFC 12)	ND	ug/L	1.0	0.46		
1/7/2015	8260C	1501071350	m,p-Xylenes	ND	ug/L	2.0	0.33		
1/7/2015	8260C	1501071350	Bromodichloromethane	ND	ug/L	1.0	0.32		
1/7/2015	8260C	1501071350	2-Hexanone	ND	ug/L	5.0	1.7		
1/7/2015	8260C	1501071350	Acetone	1.4	ug/L	10	1.3		J TB
1/7/2015	8260C	1501071350	4-Methyl-2-pentanone	ND	ug/L	5.0	0.67		
1/7/2015	8260C	1501071350	3-Chloro-1-propene (Allyl Chloride)	ND	ug/L	2.0	0.26		
1/7/2015	8260C	1501071350	Acetonitrile	ND	ug/L	25	4.7		
1/7/2015	8260C	1501071350	Dibromochloromethane	ND	ug/L	1.0	0.31		
1/7/2015	8260C	1501071350	Acrylonitrile	ND	ug/L	5.0	1.4		
1/7/2015	8260C	1501071350	2-Chloro-1,3-butadiene	ND	ug/L	1.0	0.27		
1/7/2015	8260C	1501071350	trans-1,4-Dichloro-2-butene	ND	ug/L	1.0	0.70		
1/7/2015	8260C	1501071350	1,2-Dichloro-1,1,2-trifluoroethane (CFC 123a)	ND	ug/L	1.0	0.21		
1/7/2015	8260C	1501071350	Bromomethane	ND	ug/L	2.0	0.29		
1/7/2015	8260C	1501071350	2-Methyl-1-propanol (Isobutyl Alcohol)	ND	ug/L	100	11		
1/7/2015	8260C	1501071350	Benzene	ND	ug/L	1.0	0.20		
1/7/2015	8260C	1501071350	Carbon Disulfide	ND	ug/L	1.0	0.22		
1/7/2015	8260C	1501071350	Acrolein	ND	ug/L	10	3.0		
1/7/2015	8260C	1501071350	Methyl tert-Butyl Ether	ND	ug/L	10	0.29		
1/7/2015	8260C	1501071350	1,1,2,2-Tetrachloroethane	ND	ug/L	1.0	0.25		
1/7/2015	8260C	1501071350	Dichlorofluoromethane (CFC 21)	ND	ug/L	1.0	0.24		
1/7/2015	8260C	1501071350	Toluene	ND	ug/L	1.0	0.20		
1/7/2015	8260C	1501071350	Ethyl Methacrylate	ND	ug/L	2.0	0.44		
1/7/2015	8260C	1501071350	Trichloroethene (TCE)	ND	ug/L	1.0	0.22		
1/7/2015	8260C	1501071350	Iodomethane	ND	ug/L	5.0	0.98		
1/7/2015	8260C	1501071350	Bromoform	ND	ug/L	1.0	0.42		
1/7/2015	8260C	1501071350	Methyl Methacrylate	ND	ug/L	2.0	0.62		
1/7/2015	8260C	1501071350	Dichloromethane	ND	ug/L	1.0	0.60		
1/7/2015	8260C	1501071350	Methylcyclohexane	ND	ug/L	10	0.27		
1/7/2015	8260C	1501071350	Propionitrile	ND	ug/L	5.0	3.1		
1/7/2015	8260C	1501071350	Styrene	ND	ug/L	1.0	0.20		
1/7/2015	8260C	1501071350	2-Propanol	ND	ug/L	50	8.6		
1/7/2015	8260C	1501071350	Tetrahydrofuran (THF)	ND	ug/L	5.0	0.96		
1/7/2015	8260C	1501071350	Dibromomethane	ND	ug/L	1.0	0.32		
1/7/2015	8260C	1501071350	Methacrylonitrile	ND	ug/L	5.0	0.50		
1/7/2015	TAP 01-04	1501071351	N-Nitrodimethylamine	ND	ng/L	0.47	0.19		
1/7/2015	TAP 01-04	1501071351	N-Nitrosodimethylamine	0.54	ng/L	0.47	0.31		EB

Analytical Results for Sampling Events at JER-1-568

Event Date	Analysis Method	Sample	Constituent	Result	Units	Quant Limit	Det Limit	Extract Efficiency	QA Flag
1/7/2015	SW9060	1501071352	Total Organic Carbon	ND	mg/l	1	0.1611		
1/7/2015	SM 2540 C	1501071353	Total Dissolved Solids (TDS)	764	mg/L	10	5		
1/7/2015	6010C	1501071415	Barium, Total	0.023	mg/L	0.020	0.004		
1/7/2015	6010C	1501071415	Strontium, Total	2.24	mg/L	0.10	0.002		
1/7/2015	6020A	1501071415	Thallium, Total	0.0001	mg/L	0.0010	0.00004		J RB
1/7/2015	6010C	1501071415	Tin, Total	ND	mg/L	0.50	0.05		
1/7/2015	6010C	1501071415	Vanadium, Total	0.002	mg/L	0.050	0.0007		J
1/7/2015	6010C	1501071415	Zinc, Total	0.149	mg/L	0.020	0.005		
1/7/2015	6010C	1501071415	Molybdenum, Total	0.015	mg/L	0.025	0.002		J
1/7/2015	6010C	1501071415	Beryllium, Total	ND	mg/L	0.0030	0.0002		
1/7/2015	6010C	1501071415	Selenium, Total	ND	mg/L	0.010	0.003		
1/7/2015	6020A	1501071415	Arsenic, Total	0.0015	mg/L	0.0010	0.0003		
1/7/2015	6020A	1501071415	Antimony, Total	0.0004	mg/L	0.0010	0.0002		J RB
1/7/2015	6010C	1501071415	Aluminum, Total	ND	mg/L	0.10	0.03		
1/7/2015	6010C	1501071415	Boron, Total	0.09	mg/L	0.20	0.03		J RB
1/7/2015	6010C	1501071415	Magnesium, Total	58.8	mg/L	1.0	0.02		
1/7/2015	6010C	1501071415	Potassium, Total	4.2	mg/L	2.0	0.2		
1/7/2015	6010C	1501071415	Cadmium, Total	ND	mg/L	0.0050	0.0005		
1/7/2015	6010C	1501071415	Cobalt, Total	ND	mg/L	0.050	0.002		
1/7/2015	6010C	1501071415	Copper, Total	0.004	mg/L	0.020	0.004		J RB
1/7/2015	6010C	1501071415	Sodium, Total	61.6	mg/L	1.0	0.09		
1/7/2015	6010C	1501071415	Lead, Total	ND	mg/L	0.050	0.002		
1/7/2015	6010C	1501071415	Silver, Total	ND	mg/L	0.010	0.0009		
1/7/2015	6010C	1501071415	Manganese, Total	0.127	mg/L	0.010	0.002		
1/7/2015	7470A	1501071415	Mercury, Total	ND	mg/L	0.00020	0.00003		
1/7/2015	6010C	1501071415	Chromium, Total	ND	mg/L	0.010	0.0009		
1/7/2015	6010C	1501071415	Nickel, Total	ND	mg/L	0.040	0.002		
1/7/2015	6010C	1501071415	Calcium, Total	94.5	mg/L	1.0	0.2		
1/7/2015	6010C	1501071415	Iron, Total	ND	mg/L	0.10	0.02		
1/7/2015	353.2	1501071416	Nitrate+Nitrite as Nitrogen	0.49	mg/L	0.050	0.002		
1/7/2015	PARAMS	1501261500	Turbidity	1.04	NTU	NA	NA		
1/7/2015	PARAMS	1501261500	Temperature	24.10	ºC	NA	NA		
1/7/2015	PARAMS	1501261500	Conductivity	1035	µS/cm	NA	NA		
1/7/2015	PARAMS	1501261500	pH	7.17	NA	NA	NA		
1/7/2015	8260C	1501261501	Tetrachloroethene (PCE)	ND	ug/L	1.0	0.30		

Analytical Results for Sampling Events at JER-1-568

Event Date	Analysis Method	Sample	Constituent	Result	Units	Quant Limit	Det Limit	Extract Efficiency	QA Flag
1/7/2015	8260C	1501261501	1,1-Dichloroethene	ND	ug/L	1.0	0.57		
1/7/2015	8260C	1501261501	1,1,2-Trichloro-1,2,2-Trifluoroethane	ND	ug/L	1.0	0.31		
1/7/2015	8260C	1501261501	1,1,2-Trichloroethane	ND	ug/L	1.0	0.34		
1/7/2015	8260C	1501261501	1,1,2,2-Tetrachloroethane	ND	ug/L	1.0	0.25		
1/7/2015	8260C	1501261501	1,1,1-Trichloroethane (TCA)	ND	ug/L	1.0	0.36		
1/7/2015	8260C	1501261501	2-Chloro-1,3-butadiene	ND	ug/L	1.0	0.27		
1/7/2015	8260C	1501261501	1,2-Dichloroethane	ND	ug/L	1.0	0.36		
1/7/2015	8260C	1501261501	1,2-Dichloro-1,1,2-trifluoroethane (CFC 123a)	ND	ug/L	1.0	0.21		
1/7/2015	8260C	1501261501	trans-1,4-Dichloro-2-butene	ND	ug/L	1.0	0.70		
1/7/2015	8260C	1501261501	trans-1,3-Dichloropropene	ND	ug/L	1.0	0.20		
1/7/2015	8260C	1501261501	trans-1,2-Dichloroethene	ND	ug/L	1.0	0.33		
1/7/2015	8260C	1501261501	o-Xylene	ND	ug/L	1.0	0.20		
1/7/2015	8260C	1501261501	m,p-Xylenes	ND	ug/L	2.0	0.33		
1/7/2015	8260C	1501261501	1,1,1,2-Tetrachloroethane	ND	ug/L	1.0	0.22		
1/7/2015	8260C	1501261501	2-Propanol	ND	ug/L	50	8.6		
1/7/2015	8260C	1501261501	cis-1,3-Dichloropropene	ND	ug/L	1.0	0.24		
1/7/2015	8260C	1501261501	2,2-Dichloro-1,1,1-trifluoroethane (CFC 123)	ND	ug/L	1.0	0.32		
1/7/2015	8260C	1501261501	Cyclohexane	ND	ug/L	10	0.25		
1/7/2015	8260C	1501261501	Chloromethane	ND	ug/L	2.0	0.21		
1/7/2015	8260C	1501261501	Chloroform	ND	ug/L	1.0	0.25		
1/7/2015	8260C	1501261501	1,1-Dichloroethane (1,1-DCA)	ND	ug/L	1.0	0.20		
1/7/2015	8260C	1501261501	3-Chloro-1-propene (Allyl Chloride)	ND	ug/L	2.0	0.26		
1/7/2015	8260C	1501261501	1,2-Dibromo-3-chloropropane (DBCP)	ND	ug/L	2.0	0.74		
1/7/2015	8260C	1501261501	2-Methyl-1-propanol (Isobutyl Alcohol)	ND	ug/L	100	11		
1/7/2015	8260C	1501261501	2-Hexanone	ND	ug/L	5.0	1.7		
1/7/2015	8260C	1501261501	4-Methyl-2-pentanone	ND	ug/L	5.0	0.67		
1/7/2015	8260C	1501261501	2-Butanone (MEK)	ND	ug/L	5.0	0.81		
1/7/2015	8260C	1501261501	Dichlorodifluoromethane (CFC 12)	ND	ug/L	1.0	0.46		
1/7/2015	8260C	1501261501	1,4-Dioxane	ND	ug/L	100	20		
1/7/2015	8260C	1501261501	Chloroethane	ND	ug/L	2.0	0.24		
1/7/2015	8260C	1501261501	Bromodichloromethane	ND	ug/L	1.0	0.32		
1/7/2015	8260C	1501261501	Dichloromethane	ND	ug/L	1.0	0.60		
1/7/2015	8260C	1501261501	Dichlorofluoromethane (CFC 21)	ND	ug/L	1.0	0.24		
1/7/2015	8260C	1501261501	1,2-Dibromoethane	ND	ug/L	1.0	0.24		
1/7/2015	8260C	1501261501	Toluene	ND	ug/L	1.0	0.20		
1/7/2015	8260C	1501261501	Carbon Tetrachloride	ND	ug/L	1.0	0.45		
1/7/2015	8260C	1501261501	Chlorobenzene	ND	ug/L	1.0	0.29		
1/7/2015	8260C	1501261501	Ethyl Methacrylate	ND	ug/L	2.0	0.44		

Analytical Results for Sampling Events at JER-1-568

Event Date	Analysis Method	Sample	Constituent	Result	Units	Quant Limit	Det Limit	Extract Efficiency	QA Flag
1/7/2015	8260C	1501261501	Benzene	ND	ug/L	1.0	0.20		
1/7/2015	8260C	1501261501	Acrolein	ND	ug/L	10	3.0		
1/7/2015	8260C	1501261501	Bromoform	ND	ug/L	1.0	0.42		
1/7/2015	8260C	1501261501	Bromomethane	ND	ug/L	2.0	0.29		
1/7/2015	8260C	1501261501	Carbon Disulfide	ND	ug/L	1.0	0.22		
1/7/2015	8260C	1501261501	1,2-Dichloropropane	ND	ug/L	1.0	0.20		
1/7/2015	8260C	1501261501	1,2,3-Trichloropropane	ND	ug/L	1.0	0.70		
1/7/2015	8260C	1501261501	cis-1,2-Dichloroethene	ND	ug/L	1.0	0.30		
1/7/2015	8260C	1501261501	Acetonitrile	ND	ug/L	25	4.7		
1/7/2015	8260C	1501261501	Propionitrile	ND	ug/L	5.0	3.1		
1/7/2015	8260C	1501261501	Ethylbenzene	ND	ug/L	1.0	0.20		
1/7/2015	8260C	1501261501	Trichlorofluoromethane (CFC 11)	ND	ug/L	1.0	0.20		
1/7/2015	8260C	1501261501	Trichloroethene (TCE)	1.9	ug/L	1.0	0.22		
1/7/2015	8260C	1501261501	Dibromochloromethane	ND	ug/L	1.0	0.31		
1/7/2015	8260C	1501261501	Tetrahydrofuran (THF)	ND	ug/L	5.0	0.96		
1/7/2015	8260C	1501261501	Dibromomethane	ND	ug/L	1.0	0.32		
1/7/2015	8260C	1501261501	Acetone	ND	ug/L	10	1.3		
1/7/2015	8260C	1501261501	Vinyl Acetate	ND	ug/L	5.0	1.1		
1/7/2015	8260C	1501261501	Vinyl Chloride	ND	ug/L	1.0	0.32		
1/7/2015	8260C	1501261501	Methylcyclohexane	ND	ug/L	10	0.27		
1/7/2015	8260C	1501261501	Methyl tert-Butyl Ether	ND	ug/L	10	0.29		
1/7/2015	8260C	1501261501	Methyl Methacrylate	ND	ug/L	2.0	0.62		
1/7/2015	8260C	1501261501	Methacrylonitrile	ND	ug/L	5.0	0.50		
1/7/2015	8260C	1501261501	Iodomethane	ND	ug/L	5.0	0.98		
1/7/2015	8260C	1501261501	Acrylonitrile	ND	ug/L	5.0	1.4		
1/7/2015	8260C	1501261501	Styrene	ND	ug/L	1.0	0.20		
1/7/2015	TAP 01-04	1501261502	N-Nitrosodimethylamine	0.37	ng/L	0.48	0.31		J
1/7/2015	TAP 01-04	1501261502	N-Nitrodimethylamine	ND	ng/L	0.48	0.19		
1/7/2015	SW9060	1501261503	Total Organic Carbon	0.35	mg/l	1	0.1611		J
1/7/2015	SM 2540 C	1501261504	Total Dissolved Solids (TDS)	768	mg/L	10	5		
1/7/2015	6010C	1501261505	Copper, Total	0.011	mg/L	0.020	0.004		J RB
1/7/2015	6020A	1501261505	Arsenic, Total	ND	mg/L	0.0010	0.0003		
1/7/2015	6010C	1501261505	Beryllium, Total	ND	mg/L	0.0030	0.0002		
1/7/2015	6010C	1501261505	Nickel, Total	ND	mg/L	0.040	0.002		
1/7/2015	6010C	1501261505	Cadmium, Total	ND	mg/L	0.0050	0.0005		
1/7/2015	6010C	1501261505	Magnesium, Total	56.9	mg/L	1.0	0.02		

Analytical Results for Sampling Events at JER-1-568

Event Date	Analysis Method	Sample	Constituent	Result	Units	Quant Limit	Det Limit	Extract Efficiency	QA Flag
1/7/2015	6010C	1501261505	Cobalt, Total	ND	mg/L	0.050	0.002		
1/7/2015	6010C	1501261505	Iron, Total	ND	mg/L	0.10	0.02		
1/7/2015	6010C	1501261505	Lead, Total	ND	mg/L	0.050	0.002		
1/7/2015	6010C	1501261505	Boron, Total	0.13	mg/L	0.20	0.03		J RB
1/7/2015	6010C	1501261505	Manganese, Total	0.048	mg/L	0.010	0.002		
1/7/2015	6010C	1501261505	Calcium, Total	103	mg/L	1.0	0.2		
1/7/2015	6010C	1501261505	Chromium, Total	0.001	mg/L	0.010	0.0009		J
1/7/2015	6010C	1501261505	Sodium, Total	55.6	mg/L	1.0	0.09		
1/7/2015	6020A	1501261505	Antimony, Total	0.0004	mg/L	0.0010	0.0002		J RB
1/7/2015	6010C	1501261505	Aluminum, Total	ND	mg/L	0.10	0.03		
1/7/2015	6010C	1501261505	Zinc, Total	0.626	mg/L	0.020	0.005		
1/7/2015	6010C	1501261505	Vanadium, Total	0.003	mg/L	0.050	0.0007		J
1/7/2015	6010C	1501261505	Tin, Total	ND	mg/L	0.50	0.05		
1/7/2015	6010C	1501261505	Strontium, Total	2.31	mg/L	0.10	0.002		
1/7/2015	6010C	1501261505	Silver, Total	ND	mg/L	0.010	0.0009		
1/7/2015	6010C	1501261505	Selenium, Total	0.006	mg/L	0.010	0.003		J
1/7/2015	6010C	1501261505	Potassium, Total	3.7	mg/L	2.0	0.2		
1/7/2015	6010C	1501261505	Molybdenum, Total	0.013	mg/L	0.025	0.002		J
1/7/2015	6010C	1501261505	Barium, Total	0.023	mg/L	0.020	0.004		
1/7/2015	7470A	1501261505	Mercury, Total	ND	mg/L	0.00020	0.00003		
1/7/2015	6020A	1501261505	Thallium, Total	0.00009	mg/L	0.0010	0.00004		J
1/7/2015	353.2	1501261506	Nitrate+Nitrite as Nitrogen	0.943	mg/L	0.050	0.002		
1/7/2015	PARAMS	1501270825	Temperature	22.78	ºC	NA	NA		
1/7/2015	PARAMS	1501270825	Turbidity	0.75	NTU	NA	NA		
1/7/2015	PARAMS	1501270825	Conductivity	1045	µS/cm	NA	NA		
1/7/2015	PARAMS	1501270825	pH	7.20	NA	NA	NA		
1/7/2015	8260C	1501270830	Vinyl Chloride	ND	ug/L	1.0	0.32		
1/7/2015	8260C	1501270830	trans-1,4-Dichloro-2-butene	ND	ug/L	1.0	0.70		
1/7/2015	8260C	1501270830	2,2-Dichloro-1,1,1-trifluoroethane (CFC 123)	ND	ug/L	1.0	0.32		
1/7/2015	8260C	1501270830	1,2-Dibromo-3-chloropropane (DBCP)	ND	ug/L	2.0	0.74		
1/7/2015	8260C	1501270830	Tetrachloroethene (PCE)	ND	ug/L	1.0	0.30		
1/7/2015	8260C	1501270830	Tetrahydrofuran (THF)	ND	ug/L	5.0	0.96		
1/7/2015	8260C	1501270830	trans-1,3-Dichloropropene	ND	ug/L	1.0	0.20		
1/7/2015	8260C	1501270830	Trichloroethene (TCE)	1.5	ug/L	1.0	0.22		
1/7/2015	8260C	1501270830	Methyl Methacrylate	ND	ug/L	2.0	0.62		
1/7/2015	8260C	1501270830	o-Xylene	ND	ug/L	1.0	0.20		

Analytical Results for Sampling Events at JER-1-568

Event Date	Analysis Method	Sample	Constituent	Result	Units	Quant Limit	Det Limit	Extract Efficiency	QA Flag
1/7/2015	8260C	1501270830	Vinyl Acetate	ND	ug/L	5.0	1.1		
1/7/2015	8260C	1501270830	1,2-Dichloro-1,1,2-trifluoroethane (CFC 123a)	ND	ug/L	1.0	0.21		
1/7/2015	8260C	1501270830	cis-1,2-Dichloroethene	ND	ug/L	1.0	0.30		
1/7/2015	8260C	1501270830	m,p-Xylenes	ND	ug/L	2.0	0.33		
1/7/2015	8260C	1501270830	trans-1,2-Dichloroethene	ND	ug/L	1.0	0.33		
1/7/2015	8260C	1501270830	Toluene	ND	ug/L	1.0	0.20		
1/7/2015	8260C	1501270830	1,1-Dichloroethene	ND	ug/L	1.0	0.57		
1/7/2015	8260C	1501270830	Trichlorofluoromethane (CFC 11)	ND	ug/L	1.0	0.20		
1/7/2015	8260C	1501270830	Cyclohexane	ND	ug/L	10	0.25		
1/7/2015	8260C	1501270830	Styrene	ND	ug/L	1.0	0.20		
1/7/2015	8260C	1501270830	Propionitrile	ND	ug/L	5.0	3.1		
1/7/2015	8260C	1501270830	Methylcyclohexane	ND	ug/L	10	0.27		
1/7/2015	8260C	1501270830	Dichlorofluoromethane (CFC 21)	ND	ug/L	1.0	0.24		
1/7/2015	8260C	1501270830	Dichloromethane	ND	ug/L	1.0	0.60		
1/7/2015	8260C	1501270830	Dibromomethane	ND	ug/L	1.0	0.32		
1/7/2015	8260C	1501270830	Methacrylonitrile	ND	ug/L	5.0	0.50		
1/7/2015	8260C	1501270830	Dichlorodifluoromethane (CFC 12)	ND	ug/L	1.0	0.46		
1/7/2015	8260C	1501270830	Dibromochloromethane	ND	ug/L	1.0	0.31		
1/7/2015	8260C	1501270830	cis-1,3-Dichloropropene	ND	ug/L	1.0	0.24		
1/7/2015	8260C	1501270830	Iodomethane	ND	ug/L	5.0	0.98		
1/7/2015	8260C	1501270830	Ethylbenzene	ND	ug/L	1.0	0.20		
1/7/2015	8260C	1501270830	Methyl tert-Butyl Ether	ND	ug/L	10	0.29		
1/7/2015	8260C	1501270830	Chloromethane	ND	ug/L	2.0	0.21		
1/7/2015	8260C	1501270830	4-Methyl-2-pentanone	ND	ug/L	5.0	0.67		
1/7/2015	8260C	1501270830	1,1-Dichloroethane (1,1-DCA)	ND	ug/L	1.0	0.20		
1/7/2015	8260C	1501270830	Ethyl Methacrylate	ND	ug/L	2.0	0.44		
1/7/2015	8260C	1501270830	1,1,2-Trichloro-1,2,2-Trifluoroethane	ND	ug/L	1.0	0.31		
1/7/2015	8260C	1501270830	1,1,2-Trichloroethane	ND	ug/L	1.0	0.34		
1/7/2015	8260C	1501270830	Bromoform	ND	ug/L	1.0	0.42		
1/7/2015	8260C	1501270830	1,1,1,2-Tetrachloroethane	ND	ug/L	1.0	0.22		
1/7/2015	8260C	1501270830	1,4-Dioxane	ND	ug/L	100	20		
1/7/2015	8260C	1501270830	1,2-Dichloropropane	ND	ug/L	1.0	0.20		
1/7/2015	8260C	1501270830	Chloroform	ND	ug/L	1.0	0.25		
1/7/2015	8260C	1501270830	Chloroethane	ND	ug/L	2.0	0.24		
1/7/2015	8260C	1501270830	Chlorobenzene	ND	ug/L	1.0	0.29		
1/7/2015	8260C	1501270830	Carbon Tetrachloride	ND	ug/L	1.0	0.45		
1/7/2015	8260C	1501270830	1,1,2,2-Tetrachloroethane	ND	ug/L	1.0	0.25		
1/7/2015	8260C	1501270830	2-Propanol	ND	ug/L	50	8.6		

Analytical Results for Sampling Events at JER-1-568

Event Date	Analysis Method	Sample	Constituent	Result	Units	Quant Limit	Det Limit	Extract Efficiency	QA Flag
1/7/2015	8260C	1501270830	1,1,1-Trichloroethane (TCA)	ND	ug/L	1.0	0.36		
1/7/2015	8260C	1501270830	3-Chloro-1-propene (Allyl Chloride)	ND	ug/L	2.0	0.26		
1/7/2015	8260C	1501270830	2-Butanone (MEK)	ND	ug/L	5.0	0.81		
1/7/2015	8260C	1501270830	Bromodichloromethane	ND	ug/L	1.0	0.32		
1/7/2015	8260C	1501270830	Benzene	ND	ug/L	1.0	0.20		
1/7/2015	8260C	1501270830	Acrylonitrile	ND	ug/L	5.0	1.4		
1/7/2015	8260C	1501270830	Acrolein	ND	ug/L	10	3.0		
1/7/2015	8260C	1501270830	Acetonitrile	ND	ug/L	25	4.7		
1/7/2015	8260C	1501270830	1,2-Dichloroethane	ND	ug/L	1.0	0.36		
1/7/2015	8260C	1501270830	Bromomethane	ND	ug/L	2.0	0.29		
1/7/2015	8260C	1501270830	Carbon Disulfide	ND	ug/L	1.0	0.22		
1/7/2015	8260C	1501270830	2-Methyl-1-propanol (Isobutyl Alcohol)	ND	ug/L	100	11		
1/7/2015	8260C	1501270830	1,2,3-Trichloropropane	ND	ug/L	1.0	0.70		
1/7/2015	8260C	1501270830	2-Hexanone	ND	ug/L	5.0	1.7		
1/7/2015	8260C	1501270830	1,2-Dibromoethane	ND	ug/L	1.0	0.24		
1/7/2015	8260C	1501270830	2-Chloro-1,3-butadiene	ND	ug/L	1.0	0.27		
1/7/2015	8260C	1501270830	Acetone	ND	ug/L	10	1.3		
1/7/2015	TAP 01-04	1501270831	N-Nitrodimethylamine	ND	ng/L	0.48	0.19		
1/7/2015	TAP 01-04	1501270831	N-Nitrosodimethylamine	0.44	ng/L	0.48	0.31		J
1/7/2015	SW9060	1501270832	Total Organic Carbon	0.67	mg/l	1	0.1611		J
1/7/2015	SM 2540 C	1501270833	Total Dissolved Solids (TDS)	778	mg/L	10	5		
1/7/2015	6010C	1501270834	Chromium, Total	ND	mg/L	0.010	0.0009		
1/7/2015	6010C	1501270834	Barium, Total	0.022	mg/L	0.020	0.004		
1/7/2015	6020A	1501270834	Antimony, Total	0.0002	mg/L	0.0010	0.0002		J RB
1/7/2015	6010C	1501270834	Magnesium, Total	56.3	mg/L	1.0	0.02		
1/7/2015	6010C	1501270834	Beryllium, Total	ND	mg/L	0.0030	0.0002		
1/7/2015	6010C	1501270834	Cadmium, Total	ND	mg/L	0.0050	0.0005		
1/7/2015	6010C	1501270834	Tin, Total	ND	mg/L	0.50	0.05		
1/7/2015	6010C	1501270834	Cobalt, Total	ND	mg/L	0.050	0.002		
1/7/2015	6010C	1501270834	Copper, Total	0.006	mg/L	0.020	0.004		J RB
1/7/2015	6010C	1501270834	Iron, Total	ND	mg/L	0.10	0.02		
1/7/2015	6010C	1501270834	Lead, Total	ND	mg/L	0.050	0.002		
1/7/2015	6010C	1501270834	Calcium, Total	99.1	mg/L	1.0	0.2		
1/7/2015	6010C	1501270834	Boron, Total	0.11	mg/L	0.20	0.03		J RB
1/7/2015	6010C	1501270834	Silver, Total	ND	mg/L	0.010	0.0009		
1/7/2015	7470A	1501270834	Mercury, Total	ND	mg/L	0.00020	0.00003		

Analytical Results for Sampling Events at JER-1-568

Event Date	Analysis Method	Sample	Constituent	Result	Units	Quant Limit	Det Limit	Extract Efficiency	QA Flag
1/7/2015	6010C	1501270834	Molybdenum, Total	0.012	mg/L	0.025	0.002		J
1/7/2015	6010C	1501270834	Nickel, Total	ND	mg/L	0.040	0.002		
1/7/2015	6020A	1501270834	Arsenic, Total	0.0011	mg/L	0.0010	0.0003		
1/7/2015	6010C	1501270834	Selenium, Total	0.004	mg/L	0.010	0.003		J
1/7/2015	6010C	1501270834	Aluminum, Total	ND	mg/L	0.10	0.03		
1/7/2015	6010C	1501270834	Sodium, Total	53.8	mg/L	1.0	0.09		
1/7/2015	6010C	1501270834	Strontium, Total	2.27	mg/L	0.10	0.002		
1/7/2015	6020A	1501270834	Thallium, Total	0.00009	mg/L	0.0010	0.00004		J
1/7/2015	6010C	1501270834	Vanadium, Total	0.003	mg/L	0.050	0.0007		J
1/7/2015	6010C	1501270834	Manganese, Total	0.164	mg/L	0.010	0.002		
1/7/2015	6010C	1501270834	Zinc, Total	0.163	mg/L	0.020	0.005		
1/7/2015	6010C	1501270834	Potassium, Total	3.8	mg/L	2.0	0.2		
1/7/2015	353.2	1501270835	Nitrate+Nitrite as Nitrogen	0.408	mg/L	0.050	0.002		
1/7/2015	PARAMS	1501270915	Conductivity	1043	µS/cm	NA	NA		
1/7/2015	PARAMS	1501270915	pH	7.43	NA	NA	NA		
1/7/2015	PARAMS	1501270915	Temperature	24.54	ºC	NA	NA		
1/7/2015	PARAMS	1501270915	Turbidity	0.64	NTU	NA	NA		
1/7/2015	8260C	1501270920	trans-1,4-Dichloro-2-butene	ND	ug/L	1.0	0.70		
1/7/2015	8260C	1501270920	Vinyl Acetate	ND	ug/L	5.0	1.1		
1/7/2015	8260C	1501270920	Vinyl Chloride	ND	ug/L	1.0	0.32		
1/7/2015	8260C	1501270920	cis-1,2-Dichloroethene	ND	ug/L	1.0	0.30		
1/7/2015	8260C	1501270920	cis-1,3-Dichloropropene	ND	ug/L	1.0	0.24		
1/7/2015	8260C	1501270920	m,p-Xylenes	ND	ug/L	2.0	0.33		
1/7/2015	8260C	1501270920	o-Xylene	ND	ug/L	1.0	0.20		
1/7/2015	8260C	1501270920	2-Methyl-1-propanol (Isobutyl Alcohol)	ND	ug/L	100	11		
1/7/2015	8260C	1501270920	trans-1,3-Dichloropropene	ND	ug/L	1.0	0.20		
1/7/2015	8260C	1501270920	Tetrahydrofuran (THF)	ND	ug/L	5.0	0.96		
1/7/2015	8260C	1501270920	1,2-Dichloro-1,1,2-trifluoroethane (CFC 123a)	ND	ug/L	1.0	0.21		
1/7/2015	8260C	1501270920	Toluene	ND	ug/L	1.0	0.20		
1/7/2015	8260C	1501270920	1,2-Dichloropropane	ND	ug/L	1.0	0.20		
1/7/2015	8260C	1501270920	3-Chloro-1-propene (Allyl Chloride)	ND	ug/L	2.0	0.26		
1/7/2015	8260C	1501270920	trans-1,2-Dichloroethene	ND	ug/L	1.0	0.33		
1/7/2015	8260C	1501270920	Ethylbenzene	ND	ug/L	1.0	0.20		
1/7/2015	8260C	1501270920	Ethyl Methacrylate	ND	ug/L	2.0	0.44		
1/7/2015	8260C	1501270920	Styrene	ND	ug/L	1.0	0.20		
1/7/2015	8260C	1501270920	Propionitrile	ND	ug/L	5.0	3.1		

Analytical Results for Sampling Events at JER-1-568

Event Date	Analysis Method	Sample	Constituent	Result	Units	Quant Limit	Det Limit	Extract Efficiency	QA Flag
1/7/2015	8260C	1501270920	Methylcyclohexane	ND	ug/L	10	0.27		
1/7/2015	8260C	1501270920	Methyl tert-Butyl Ether	ND	ug/L	10	0.29		
1/7/2015	8260C	1501270920	Methyl Methacrylate	ND	ug/L	2.0	0.62		
1/7/2015	8260C	1501270920	Cyclohexane	ND	ug/L	10	0.25		
1/7/2015	8260C	1501270920	Tetrachloroethene (PCE)	ND	ug/L	1.0	0.30		
1/7/2015	8260C	1501270920	Trichloroethene (TCE)	0.94	ug/L	1.0	0.22		J
1/7/2015	8260C	1501270920	Trichlorofluoromethane (CFC 11)	ND	ug/L	1.0	0.20		
1/7/2015	8260C	1501270920	Dichloromethane	ND	ug/L	1.0	0.60		
1/7/2015	8260C	1501270920	Dichlorofluoromethane (CFC 21)	ND	ug/L	1.0	0.24		
1/7/2015	8260C	1501270920	Dichlorodifluoromethane (CFC 12)	ND	ug/L	1.0	0.46		
1/7/2015	8260C	1501270920	Iodomethane	ND	ug/L	5.0	0.98		
1/7/2015	8260C	1501270920	2-Hexanone	ND	ug/L	5.0	1.7		
1/7/2015	8260C	1501270920	Methacrylonitrile	ND	ug/L	5.0	0.50		
1/7/2015	8260C	1501270920	Dibromochloromethane	ND	ug/L	1.0	0.31		
1/7/2015	8260C	1501270920	2-Propanol	ND	ug/L	50	8.6		
1/7/2015	8260C	1501270920	4-Methyl-2-pentanone	ND	ug/L	5.0	0.67		
1/7/2015	8260C	1501270920	Bromomethane	ND	ug/L	2.0	0.29		
1/7/2015	8260C	1501270920	Acetone	ND	ug/L	10	1.3		
1/7/2015	8260C	1501270920	Bromodichloromethane	ND	ug/L	1.0	0.32		
1/7/2015	8260C	1501270920	Benzene	ND	ug/L	1.0	0.20		
1/7/2015	8260C	1501270920	Chlorobenzene	ND	ug/L	1.0	0.29		
1/7/2015	8260C	1501270920	Acrolein	ND	ug/L	10	3.0		
1/7/2015	8260C	1501270920	Chloroethane	ND	ug/L	2.0	0.24		
1/7/2015	8260C	1501270920	Carbon Disulfide	ND	ug/L	1.0	0.22		
1/7/2015	8260C	1501270920	1,1,1,2-Tetrachloroethane	ND	ug/L	1.0	0.22		
1/7/2015	8260C	1501270920	1,1,1-Trichloroethane (TCA)	ND	ug/L	1.0	0.36		
1/7/2015	8260C	1501270920	1,1,2,2-Tetrachloroethane	ND	ug/L	1.0	0.25		
1/7/2015	8260C	1501270920	1,2,3-Trichloropropane	ND	ug/L	1.0	0.70		
1/7/2015	8260C	1501270920	1,1,2-Trichloroethane	ND	ug/L	1.0	0.34		
1/7/2015	8260C	1501270920	Acrylonitrile	ND	ug/L	5.0	1.4		
1/7/2015	8260C	1501270920	1,1-Dichloroethane (1,1-DCA)	ND	ug/L	1.0	0.20		
1/7/2015	8260C	1501270920	2-Chloro-1,3-butadiene	ND	ug/L	1.0	0.27		
1/7/2015	8260C	1501270920	2-Butanone (MEK)	ND	ug/L	5.0	0.81		
1/7/2015	8260C	1501270920	Dibromomethane	ND	ug/L	1.0	0.32		
1/7/2015	8260C	1501270920	1,4-Dioxane	ND	ug/L	100	20		
1/7/2015	8260C	1501270920	Acetonitrile	ND	ug/L	25	4.7		
1/7/2015	8260C	1501270920	1,2-Dichloroethane	ND	ug/L	1.0	0.36		
1/7/2015	8260C	1501270920	Carbon Tetrachloride	ND	ug/L	1.0	0.45		

Analytical Results for Sampling Events at JER-1-568

Event Date	Analysis Method	Sample	Constituent	Result	Units	Quant Limit	Det Limit	Extract Efficiency	QA Flag
1/7/2015	8260C	1501270920	1,1-Dichloroethene	ND	ug/L	1.0	0.57		
1/7/2015	8260C	1501270920	1,1,2-Trichloro-1,2,2-Trifluoroethane	ND	ug/L	1.0	0.31		
1/7/2015	8260C	1501270920	2,2-Dichloro-1,1,1-trifluoroethane (CFC 123)	ND	ug/L	1.0	0.32		
1/7/2015	8260C	1501270920	Bromoform	ND	ug/L	1.0	0.42		
1/7/2015	8260C	1501270920	1,2-Dibromoethane	ND	ug/L	1.0	0.24		
1/7/2015	8260C	1501270920	Chloromethane	ND	ug/L	2.0	0.21		
1/7/2015	8260C	1501270920	Chloroform	ND	ug/L	1.0	0.25		
1/7/2015	8260C	1501270920	1,2-Dibromo-3-chloropropane (DBCP)	ND	ug/L	2.0	0.74		
1/7/2015	TAP 01-04	1501270922	N-Nitrosodimethylamine	0.36	ng/L	0.48	0.31		J
1/7/2015	TAP 01-04	1501270922	N-Nitrodimethylamine	ND	ng/L	0.48	0.19		
1/7/2015	SW9060	1501270924	Total Organic Carbon	0.69	mg/l	1	0.1611		J
1/7/2015	SM 2540 C	1501270925	Total Dissolved Solids (TDS)	773	mg/L	10	5		
1/7/2015	6010C	1501270926	Chromium, Total	ND	mg/L	0.010	0.0009		
1/7/2015	6020A	1501270926	Antimony, Total	0.0005	mg/L	0.0010	0.0002		J RB
1/7/2015	6020A	1501270926	Arsenic, Total	0.0009	mg/L	0.0010	0.0003		J
1/7/2015	6010C	1501270926	Manganese, Total	0.164	mg/L	0.010	0.002		
1/7/2015	6010C	1501270926	Beryllium, Total	ND	mg/L	0.0030	0.0002		
1/7/2015	6010C	1501270926	Iron, Total	ND	mg/L	0.10	0.02		
1/7/2015	6010C	1501270926	Boron, Total	0.11	mg/L	0.20	0.03		J RB
1/7/2015	6010C	1501270926	Calcium, Total	96.8	mg/L	1.0	0.2		
1/7/2015	6010C	1501270926	Strontium, Total	2.23	mg/L	0.10	0.002		
1/7/2015	6010C	1501270926	Cobalt, Total	ND	mg/L	0.050	0.002		
1/7/2015	6010C	1501270926	Copper, Total	ND	mg/L	0.020	0.004		
1/7/2015	6010C	1501270926	Barium, Total	0.022	mg/L	0.020	0.004		
1/7/2015	6010C	1501270926	Cadmium, Total	ND	mg/L	0.0050	0.0005		
1/7/2015	6010C	1501270926	Selenium, Total	0.003	mg/L	0.010	0.003		J
1/7/2015	6010C	1501270926	Silver, Total	ND	mg/L	0.010	0.0009		
1/7/2015	6010C	1501270926	Lead, Total	ND	mg/L	0.050	0.002		
1/7/2015	6010C	1501270926	Zinc, Total	0.036	mg/L	0.020	0.005		
1/7/2015	6010C	1501270926	Vanadium, Total	0.003	mg/L	0.050	0.0007		J
1/7/2015	6010C	1501270926	Tin, Total	ND	mg/L	0.50	0.05		
1/7/2015	6010C	1501270926	Aluminum, Total	ND	mg/L	0.10	0.03		
1/7/2015	6010C	1501270926	Sodium, Total	53.2	mg/L	1.0	0.09		
1/7/2015	6010C	1501270926	Potassium, Total	3.5	mg/L	2.0	0.2		
1/7/2015	6010C	1501270926	Nickel, Total	ND	mg/L	0.040	0.002		
1/7/2015	6010C	1501270926	Molybdenum, Total	0.012	mg/L	0.025	0.002		J

Analytical Results for Sampling Events at JER-1-568

Event Date	Analysis Method	Sample	Constituent	Result	Units	Quant Limit	Det Limit	Extract Efficiency	QA Flag
1/7/2015	7470A	1501270926	Mercury, Total	ND	mg/L	0.00020	0.00003		
1/7/2015	6010C	1501270926	Magnesium, Total	55.4	mg/L	1.0	0.02		
1/7/2015	6020A	1501270926	Thallium, Total	0.0001	mg/L	0.0010	0.00004		J
1/7/2015	353.2	1501270927	Nitrate+Nitrite as Nitrogen	0.839	mg/L	0.050	0.002		
1/7/2015	PARAMS	1501271500	Temperature	25.46	ºC	NA	NA		
1/7/2015	PARAMS	1501271500	pH	7.49	NA	NA	NA		
1/7/2015	PARAMS	1501271500	Turbidity	0.72	NTU	NA	NA		
1/7/2015	PARAMS	1501271500	Conductivity	1034	µS/cm	NA	NA		
1/7/2015	8260C	1501271505	2-Butanone (MEK)	ND	ug/L	5.0	0.81		
1/7/2015	8260C	1501271505	Carbon Disulfide	ND	ug/L	1.0	0.22		
1/7/2015	8260C	1501271505	1,2-Dichloro-1,1,2-trifluoroethane (CFC 123a)	ND	ug/L	1.0	0.21		
1/7/2015	8260C	1501271505	1,1,1,2-Tetrachloroethane	ND	ug/L	1.0	0.22		
1/7/2015	8260C	1501271505	1,1,1-Trichloroethane (TCA)	ND	ug/L	1.0	0.36		
1/7/2015	8260C	1501271505	1,1,2,2-Tetrachloroethane	ND	ug/L	1.0	0.25		
1/7/2015	8260C	1501271505	Methacrylonitrile	ND	ug/L	5.0	0.50		
1/7/2015	8260C	1501271505	1,1,2-Trichloro-1,2,2-Trifluoroethane	ND	ug/L	1.0	0.31		
1/7/2015	8260C	1501271505	Benzene	ND	ug/L	1.0	0.20		
1/7/2015	8260C	1501271505	1,2-Dibromo-3-chloropropane (DBCP)	ND	ug/L	2.0	0.74		
1/7/2015	8260C	1501271505	1,2-Dibromoethane	ND	ug/L	1.0	0.24		
1/7/2015	8260C	1501271505	1,2-Dichloroethane	ND	ug/L	1.0	0.36		
1/7/2015	8260C	1501271505	1,2-Dichloropropane	ND	ug/L	1.0	0.20		
1/7/2015	8260C	1501271505	1,4-Dioxane	ND	ug/L	100	20		
1/7/2015	8260C	1501271505	1,2,3-Trichloropropane	ND	ug/L	1.0	0.70		
1/7/2015	8260C	1501271505	4-Methyl-2-pentanone	ND	ug/L	5.0	0.67		
1/7/2015	8260C	1501271505	2-Hexanone	ND	ug/L	5.0	1.7		
1/7/2015	8260C	1501271505	Bromomethane	ND	ug/L	2.0	0.29		
1/7/2015	8260C	1501271505	2-Methyl-1-propanol (Isobutyl Alcohol)	ND	ug/L	100	11		
1/7/2015	8260C	1501271505	trans-1,4-Dichloro-2-butene	ND	ug/L	1.0	0.70		
1/7/2015	8260C	1501271505	2-Propanol	ND	ug/L	50	8.6		
1/7/2015	8260C	1501271505	1,1-Dichloroethene	ND	ug/L	1.0	0.57		
1/7/2015	8260C	1501271505	Bromodichloromethane	ND	ug/L	1.0	0.32		
1/7/2015	8260C	1501271505	1,1-Dichloroethane (1,1-DCA)	ND	ug/L	1.0	0.20		
1/7/2015	8260C	1501271505	2-Chloro-1,3-butadiene	ND	ug/L	1.0	0.27		
1/7/2015	8260C	1501271505	Acetone	ND	ug/L	10	1.3		
1/7/2015	8260C	1501271505	Acrolein	ND	ug/L	10	3.0		
1/7/2015	8260C	1501271505	Acrylonitrile	ND	ug/L	5.0	1.4		

Analytical Results for Sampling Events at JER-1-568

Event Date	Analysis Method	Sample	Constituent	Result	Units	Quant Limit	Det Limit	Extract Efficiency	QA Flag
1/7/2015	8260C	1501271505	2,2-Dichloro-1,1,1-trifluoroethane (CFC 123)	ND	ug/L	1.0	0.32		
1/7/2015	8260C	1501271505	Bromoform	ND	ug/L	1.0	0.42		
1/7/2015	8260C	1501271505	3-Chloro-1-propene (Allyl Chloride)	ND	ug/L	2.0	0.26		
1/7/2015	8260C	1501271505	Ethyl Methacrylate	ND	ug/L	2.0	0.44		
1/7/2015	8260C	1501271505	Chlorobenzene	ND	ug/L	1.0	0.29		
1/7/2015	8260C	1501271505	Chloroethane	ND	ug/L	2.0	0.24		
1/7/2015	8260C	1501271505	Chloroform	ND	ug/L	1.0	0.25		
1/7/2015	8260C	1501271505	Chloromethane	ND	ug/L	2.0	0.21		
1/7/2015	8260C	1501271505	Cyclohexane	ND	ug/L	10	0.25		
1/7/2015	8260C	1501271505	Styrene	ND	ug/L	1.0	0.20		
1/7/2015	8260C	1501271505	Dichlorofluoromethane (CFC 21)	ND	ug/L	1.0	0.24		
1/7/2015	8260C	1501271505	Dichloromethane	ND	ug/L	1.0	0.60		
1/7/2015	8260C	1501271505	Dibromochloromethane	ND	ug/L	1.0	0.31		
1/7/2015	8260C	1501271505	Iodomethane	ND	ug/L	5.0	0.98		
1/7/2015	8260C	1501271505	Methyl Methacrylate	ND	ug/L	2.0	0.62		
1/7/2015	8260C	1501271505	Methyl tert-Butyl Ether	ND	ug/L	10	0.29		
1/7/2015	8260C	1501271505	Dibromomethane	ND	ug/L	1.0	0.32		
1/7/2015	8260C	1501271505	Acetonitrile	ND	ug/L	25	4.7		
1/7/2015	8260C	1501271505	1,1,2-Trichloroethane	ND	ug/L	1.0	0.34		
1/7/2015	8260C	1501271505	trans-1,3-Dichloropropene	ND	ug/L	1.0	0.20		
1/7/2015	8260C	1501271505	Methylcyclohexane	ND	ug/L	10	0.27		
1/7/2015	8260C	1501271505	Vinyl Chloride	ND	ug/L	1.0	0.32		
1/7/2015	8260C	1501271505	Toluene	ND	ug/L	1.0	0.20		
1/7/2015	8260C	1501271505	Trichloroethene (TCE)	0.66	ug/L	1.0	0.22		J
1/7/2015	8260C	1501271505	Trichlorofluoromethane (CFC 11)	ND	ug/L	1.0	0.20		
1/7/2015	8260C	1501271505	Vinyl Acetate	ND	ug/L	5.0	1.1		
1/7/2015	8260C	1501271505	Propionitrile	ND	ug/L	5.0	3.1		
1/7/2015	8260C	1501271505	Dichlorodifluoromethane (CFC 12)	ND	ug/L	1.0	0.46		
1/7/2015	8260C	1501271505	Tetrachloroethene (PCE)	ND	ug/L	1.0	0.30		
1/7/2015	8260C	1501271505	Tetrahydrofuran (THF)	ND	ug/L	5.0	0.96		
1/7/2015	8260C	1501271505	cis-1,3-Dichloropropene	ND	ug/L	1.0	0.24		
1/7/2015	8260C	1501271505	m,p-Xylenes	ND	ug/L	2.0	0.33		
1/7/2015	8260C	1501271505	o-Xylene	ND	ug/L	1.0	0.20		
1/7/2015	8260C	1501271505	trans-1,2-Dichloroethene	ND	ug/L	1.0	0.33		
1/7/2015	8260C	1501271505	Carbon Tetrachloride	ND	ug/L	1.0	0.45		
1/7/2015	8260C	1501271505	Ethylbenzene	ND	ug/L	1.0	0.20		
1/7/2015	8260C	1501271505	cis-1,2-Dichloroethene	ND	ug/L	1.0	0.30		

Analytical Results for Sampling Events at JER-1-568

Event Date	Analysis Method	Sample	Constituent	Result	Units	Quant Limit	Det Limit	Extract Efficiency	QA Flag
1/7/2015	TAP 01-04	1501271506	N-Nitrosodimethylamine	ND	ng/L	0.48	0.31		
1/7/2015	TAP 01-04	1501271506	N-Nitrodimethylamine	ND	ng/L	0.48	0.19		
1/7/2015	SW9060	1501271507	Total Organic Carbon	0.48	mg/l	1	0.1611		J
1/7/2015	6010C	1501271508	Iron, Total	ND	mg/L	0.10	0.02		
1/7/2015	6010C	1501271508	Lead, Total	ND	mg/L	0.050	0.002		
1/7/2015	6010C	1501271508	Magnesium, Total	52.9	mg/L	1.0	0.02		
1/7/2015	6010C	1501271508	Cobalt, Total	ND	mg/L	0.050	0.002		
1/7/2015	6010C	1501271508	Aluminum, Total	ND	mg/L	0.10	0.03		
1/7/2015	6020A	1501271508	Antimony, Total	0.0003	mg/L	0.0010	0.0002		J RB
1/7/2015	6020A	1501271508	Arsenic, Total	0.0005	mg/L	0.0010	0.0003		J
1/7/2015	6010C	1501271508	Barium, Total	0.022	mg/L	0.020	0.004		
1/7/2015	6010C	1501271508	Beryllium, Total	ND	mg/L	0.0030	0.0002		
1/7/2015	6010C	1501271508	Boron, Total	0.1	mg/L	0.20	0.03		J RB
1/7/2015	6010C	1501271508	Cadmium, Total	ND	mg/L	0.0050	0.0005		
1/7/2015	6010C	1501271508	Chromium, Total	ND	mg/L	0.010	0.0009		
1/7/2015	6010C	1501271508	Silver, Total	ND	mg/L	0.010	0.0009		
1/7/2015	6010C	1501271508	Copper, Total	ND	mg/L	0.020	0.004		
1/7/2015	6010C	1501271508	Molybdenum, Total	0.011	mg/L	0.025	0.002		J
1/7/2015	6010C	1501271508	Nickel, Total	ND	mg/L	0.040	0.002		
1/7/2015	6010C	1501271508	Zinc, Total	0.019	mg/L	0.020	0.005		J
1/7/2015	6010C	1501271508	Selenium, Total	0.004	mg/L	0.010	0.003		J
1/7/2015	6010C	1501271508	Calcium, Total	92.5	mg/L	1.0	0.2		
1/7/2015	6010C	1501271508	Strontium, Total	2.09	mg/L	0.10	0.002		
1/7/2015	6020A	1501271508	Thallium, Total	0.00009	mg/L	0.0010	0.00004		J
1/7/2015	6010C	1501271508	Tin, Total	ND	mg/L	0.50	0.05		
1/7/2015	6010C	1501271508	Vanadium, Total	0.003	mg/L	0.050	0.0007		J
1/7/2015	6010C	1501271508	Sodium, Total	50.6	mg/L	1.0	0.09		
1/7/2015	6010C	1501271508	Manganese, Total	0.115	mg/L	0.010	0.002		
1/7/2015	7470A	1501271508	Mercury, Total	ND	mg/L	0.00020	0.00003		
1/7/2015	6010C	1501271508	Potassium, Total	3.4	mg/L	2.0	0.2		
1/7/2015	353.2	1501271509	Nitrate+Nitrite as Nitrogen	1.08	mg/L	0.050	0.002		
1/7/2015	SM 2540 C	1501271510	Total Dissolved Solids (TDS)	760	mg/L	10	5		
1/7/2015	PARAMS	1501281000	Conductivity	1036	µS/cm	NA	NA		
1/7/2015	PARAMS	1501281000	Temperature	24.80	ºC	NA	NA		
1/7/2015	PARAMS	1501281000	pH	7.54	NA	NA	NA		

Analytical Results for Sampling Events at JER-1-568

Event Date	Analysis Method	Sample	Constituent	Result	Units	Quant Limit	Det Limit	Extract Efficiency	QA Flag
1/7/2015	PARAMS	1501281000	Turbidity	0.43	NTU	NA	NA		
1/7/2015	8260C	1501281005	cis-1,3-Dichloropropene	ND	ug/L	1.0	0.24		
1/7/2015	8260C	1501281005	Benzene	ND	ug/L	1.0	0.20		
1/7/2015	8260C	1501281005	o-Xylene	ND	ug/L	1.0	0.20		
1/7/2015	8260C	1501281005	Acrolein	ND	ug/L	10	3.0		
1/7/2015	8260C	1501281005	Acetonitrile	ND	ug/L	25	4.7		
1/7/2015	8260C	1501281005	Ethylbenzene	ND	ug/L	1.0	0.20		
1/7/2015	8260C	1501281005	Acrylonitrile	ND	ug/L	5.0	1.4		
1/7/2015	8260C	1501281005	Dibromomethane	ND	ug/L	1.0	0.32		
1/7/2015	8260C	1501281005	Toluene	ND	ug/L	1.0	0.20		
1/7/2015	8260C	1501281005	2-Propanol	ND	ug/L	50	8.6		
1/7/2015	8260C	1501281005	1,2-Dichloro-1,1,2-trifluoroethane (CFC 123a)	ND	ug/L	1.0	0.21		
1/7/2015	8260C	1501281005	trans-1,4-Dichloro-2-butene	ND	ug/L	1.0	0.70		
1/7/2015	8260C	1501281005	trans-1,3-Dichloropropene	ND	ug/L	1.0	0.20		
1/7/2015	8260C	1501281005	Acetone	ND	ug/L	10	1.3		
1/7/2015	8260C	1501281005	trans-1,2-Dichloroethene	ND	ug/L	1.0	0.33		
1/7/2015	8260C	1501281005	Chloromethane	ND	ug/L	2.0	0.21		
1/7/2015	8260C	1501281005	1,1,1,2-Tetrachloroethane	ND	ug/L	1.0	0.22		
1/7/2015	8260C	1501281005	cis-1,2-Dichloroethene	ND	ug/L	1.0	0.30		
1/7/2015	8260C	1501281005	Chlorobenzene	ND	ug/L	1.0	0.29		
1/7/2015	8260C	1501281005	Dichlorofluoromethane (CFC 21)	ND	ug/L	1.0	0.24		
1/7/2015	8260C	1501281005	Dichloromethane	ND	ug/L	1.0	0.60		
1/7/2015	8260C	1501281005	Dichlorodifluoromethane (CFC 12)	ND	ug/L	1.0	0.46		
1/7/2015	8260C	1501281005	Cyclohexane	ND	ug/L	10	0.25		
1/7/2015	8260C	1501281005	Dibromochloromethane	ND	ug/L	1.0	0.31		
1/7/2015	8260C	1501281005	Bromodichloromethane	ND	ug/L	1.0	0.32		
1/7/2015	8260C	1501281005	Chloroform	ND	ug/L	1.0	0.25		
1/7/2015	8260C	1501281005	Chloroethane	ND	ug/L	2.0	0.24		
1/7/2015	8260C	1501281005	Carbon Tetrachloride	ND	ug/L	1.0	0.45		
1/7/2015	8260C	1501281005	Carbon Disulfide	ND	ug/L	1.0	0.22		
1/7/2015	8260C	1501281005	Bromomethane	ND	ug/L	2.0	0.29		
1/7/2015	8260C	1501281005	Bromoform	ND	ug/L	1.0	0.42		
1/7/2015	8260C	1501281005	Ethyl Methacrylate	ND	ug/L	2.0	0.44		
1/7/2015	8260C	1501281005	2-Chloro-1,3-butadiene	ND	ug/L	1.0	0.27		
1/7/2015	8260C	1501281005	1,1-Dichloroethane (1,1-DCA)	ND	ug/L	1.0	0.20		
1/7/2015	8260C	1501281005	1,1-Dichloroethene	ND	ug/L	1.0	0.57		
1/7/2015	8260C	1501281005	1,2,3-Trichloropropane	ND	ug/L	1.0	0.70		

Analytical Results for Sampling Events at JER-1-568

Event Date	Analysis Method	Sample	Constituent	Result	Units	Quant Limit	Det Limit	Extract Efficiency	QA Flag
1/7/2015	8260C	1501281005	1,2-Dibromo-3-chloropropane (DBCP)	ND	ug/L	2.0	0.74		
1/7/2015	8260C	1501281005	1,2-Dibromoethane	ND	ug/L	1.0	0.24		
1/7/2015	8260C	1501281005	1,1,2-Trichloro-1,2,2-Trifluoroethane	ND	ug/L	1.0	0.31		
1/7/2015	8260C	1501281005	2,2-Dichloro-1,1,1-trifluoroethane (CFC 123)	ND	ug/L	1.0	0.32		
1/7/2015	8260C	1501281005	1,4-Dioxane	ND	ug/L	100	20		
1/7/2015	8260C	1501281005	2-Hexanone	ND	ug/L	5.0	1.7		
1/7/2015	8260C	1501281005	4-Methyl-2-pentanone	ND	ug/L	5.0	0.67		
1/7/2015	8260C	1501281005	2-Methyl-1-propanol (Isobutyl Alcohol)	ND	ug/L	100	11		
1/7/2015	8260C	1501281005	1,2-Dichloroethane	ND	ug/L	1.0	0.36		
1/7/2015	8260C	1501281005	Vinyl Chloride	ND	ug/L	1.0	0.32		
1/7/2015	8260C	1501281005	1,1,1-Trichloroethane (TCA)	ND	ug/L	1.0	0.36		
1/7/2015	8260C	1501281005	1,2-Dichloropropane	ND	ug/L	1.0	0.20		
1/7/2015	8260C	1501281005	Vinyl Acetate	ND	ug/L	5.0	1.1		
1/7/2015	8260C	1501281005	1,1,2-Trichloroethane	ND	ug/L	1.0	0.34		
1/7/2015	8260C	1501281005	Trichloroethene (TCE)	0.51	ug/L	1.0	0.22		J
1/7/2015	8260C	1501281005	Iodomethane	ND	ug/L	5.0	0.98		
1/7/2015	8260C	1501281005	Tetrahydrofuran (THF)	ND	ug/L	5.0	0.96		
1/7/2015	8260C	1501281005	Tetrachloroethene (PCE)	ND	ug/L	1.0	0.30		
1/7/2015	8260C	1501281005	Styrene	ND	ug/L	1.0	0.20		
1/7/2015	8260C	1501281005	2-Butanone (MEK)	ND	ug/L	5.0	0.81		
1/7/2015	8260C	1501281005	Propionitrile	ND	ug/L	5.0	3.1		
1/7/2015	8260C	1501281005	Methylcyclohexane	ND	ug/L	10	0.27		
1/7/2015	8260C	1501281005	Methyl tert-Butyl Ether	ND	ug/L	10	0.29		
1/7/2015	8260C	1501281005	Methyl Methacrylate	ND	ug/L	2.0	0.62		
1/7/2015	8260C	1501281005	Methacrylonitrile	ND	ug/L	5.0	0.50		
1/7/2015	8260C	1501281005	Trichlorofluoromethane (CFC 11)	ND	ug/L	1.0	0.20		
1/7/2015	8260C	1501281005	3-Chloro-1-propene (Allyl Chloride)	ND	ug/L	2.0	0.26		
1/7/2015	8260C	1501281005	1,1,2,2-Tetrachloroethane	ND	ug/L	1.0	0.25		
1/7/2015	8260C	1501281005	m,p-Xylenes	ND	ug/L	2.0	0.33		
1/7/2015	TAP 01-04	1501281007	N-Nitrosodimethylamine	ND	ng/L	0.47	0.31		
1/7/2015	TAP 01-04	1501281007	N-Nitrodimethylamine	0.7	ng/L	0.47	0.19		
1/7/2015	SW9060	1501281009	Total Organic Carbon	0.52	mg/l	1	0.1611		J
1/7/2015	SM 2540 C	1501281010	Total Dissolved Solids (TDS)	759	mg/L	10	5		
1/7/2015	6010C	1501281011	Cobalt, Total	ND	mg/L	0.050	0.002		
1/7/2015	6010C	1501281011	Aluminum, Total	ND	mg/L	0.10	0.03		
1/7/2015	6020A	1501281011	Arsenic, Total	0.0009	mg/L	0.0010	0.0003		J

Analytical Results for Sampling Events at JER-1-568

Event Date	Analysis Method	Sample	Constituent	Result	Units	Quant Limit	Det Limit	Extract Efficiency	QA Flag
1/7/2015	6010C	1501281011	Barium, Total	0.023	mg/L	0.020	0.004		
1/7/2015	6010C	1501281011	Boron, Total	0.1	mg/L	0.20	0.03		J RB
1/7/2015	6010C	1501281011	Magnesium, Total	60.5	mg/L	1.0	0.02		
1/7/2015	6010C	1501281011	Chromium, Total	ND	mg/L	0.010	0.0009		
1/7/2015	6010C	1501281011	Copper, Total	ND	mg/L	0.020	0.004		
1/7/2015	6010C	1501281011	Iron, Total	ND	mg/L	0.10	0.02		
1/7/2015	6010C	1501281011	Lead, Total	ND	mg/L	0.050	0.002		
1/7/2015	6010C	1501281011	Beryllium, Total	ND	mg/L	0.0030	0.0002		
1/7/2015	6010C	1501281011	Cadmium, Total	ND	mg/L	0.0050	0.0005		
1/7/2015	6010C	1501281011	Calcium, Total	96.5	mg/L	5.0	0.8		
1/7/2015	6020A	1501281011	Antimony, Total	0.0006	mg/L	0.0010	0.0002		J RB
1/7/2015	6010C	1501281011	Manganese, Total	0.085	mg/L	0.010	0.002		
1/7/2015	6010C	1501281011	Tin, Total	ND	mg/L	0.50	0.05		
1/7/2015	6010C	1501281011	Vanadium, Total	0.003	mg/L	0.050	0.0007		J
1/7/2015	6020A	1501281011	Thallium, Total	0.00008	mg/L	0.0010	0.00004		J RB
1/7/2015	6010C	1501281011	Strontium, Total	2.46	mg/L	0.10	0.002		
1/7/2015	6010C	1501281011	Sodium, Total	58.2	mg/L	1.0	0.09		
1/7/2015	6010C	1501281011	Silver, Total	ND	mg/L	0.010	0.0009		
1/7/2015	6010C	1501281011	Selenium, Total	0.006	mg/L	0.010	0.003		J
1/7/2015	6010C	1501281011	Potassium, Total	3.9	mg/L	2.0	0.2		
1/7/2015	6010C	1501281011	Nickel, Total	ND	mg/L	0.040	0.002		
1/7/2015	6010C	1501281011	Molybdenum, Total	0.012	mg/L	0.025	0.002		J RB
1/7/2015	7470A	1501281011	Mercury, Total	ND	mg/L	0.00020	0.00003		
1/7/2015	6010C	1501281011	Zinc, Total	0.014	mg/L	0.020	0.005		J
1/7/2015	353.2	1501281012	Nitrate+Nitrite as Nitrogen	1.09	mg/L	0.050	0.002		

Analytical Results for Sampling Events at JER-1-688

Event Date	Analysis Method	Sample	Constituent	Result	Units	Quant Limit	Det Limit	Extract Efficiency	QA Flag
10/1/2014	PARAMS	1410010845	pH	8.30	NA	NA	NA		
10/1/2014	PARAMS	1410010845	Temperature	23.8	ºC	NA	NA		
10/1/2014	PARAMS	1410010845	Conductivity	1171	µS/cm	NA	NA		
10/1/2014	PARAMS	1410010845	Turbidity	8.73	NTU	NA	NA		
10/1/2014	PARAMS	1410010845	DTW	448.10	ft	NA	NA		
10/1/2014	8260C	1410010910	Methyl Methacrylate	ND	ug/L	0.50	0.39		
10/1/2014	8260C	1410010910	Ethylbenzene	ND	ug/L	0.50	0.20		
10/1/2014	8260C	1410010910	trans-1,3-Dichloropropene	ND	ug/L	0.50	0.20		
10/1/2014	8260C	1410010910	Cyclohexane	ND	ug/L	1.0	0.25		
10/1/2014	8260C	1410010910	3-Chloro-1-propene (Allyl Chloride)	ND	ug/L	0.50	0.25		
10/1/2014	8260C	1410010910	1,2-Dichloropropane	ND	ug/L	0.50	0.20		
10/1/2014	8260C	1410010910	1,4-Dioxane	ND	ug/L	40	18		
10/1/2014	8260C	1410010910	2,2-Dichloro-1,1,1-trifluoroethane (CFC 123)	ND	ug/L	0.50	0.32		
10/1/2014	8260C	1410010910	2-Butanone (MEK)	ND	ug/L	5.0	0.81		
10/1/2014	8260C	1410010910	Ethyl Methacrylate	ND	ug/L	0.50	0.20		
10/1/2014	8260C	1410010910	Bromomethane	ND	ug/L	0.50	0.24		
10/1/2014	8260C	1410010910	Bromodichloromethane	ND	ug/L	0.50	0.32		
10/1/2014	8260C	1410010910	4-Methyl-2-pentanone	ND	ug/L	2.0	0.20		
10/1/2014	8260C	1410010910	Acetone	ND	ug/L	5.0	1.3		
10/1/2014	8260C	1410010910	Acetonitrile	ND	ug/L	25	3.7		
10/1/2014	8260C	1410010910	2-Chloro-1,3-butadiene	ND	ug/L	0.50	0.22		
10/1/2014	8260C	1410010910	Chloroform	ND	ug/L	0.50	0.20		
10/1/2014	8260C	1410010910	o-Xylene	ND	ug/L	0.50	0.20		
10/1/2014	8260C	1410010910	Dibromomethane	ND	ug/L	0.50	0.22		
10/1/2014	8260C	1410010910	Methacrylonitrile	ND	ug/L	1.0	0.50		
10/1/2014	8260C	1410010910	Carbon Disulfide	0.72	ug/L	0.50	0.20		
10/1/2014	8260C	1410010910	Carbon Tetrachloride	ND	ug/L	0.50	0.45		
10/1/2014	8260C	1410010910	Dichlorofluoromethane (CFC 21)	ND	ug/L	0.50	0.20		
10/1/2014	8260C	1410010910	Chloroethane	ND	ug/L	0.50	0.22		
10/1/2014	8260C	1410010910	Dichloromethane	ND	ug/L	0.50	0.20		
10/1/2014	8260C	1410010910	Chloromethane	ND	ug/L	0.50	0.20		
10/1/2014	8260C	1410010910	Bromoform	ND	ug/L	1.0	0.21		
10/1/2014	8260C	1410010910	Dibromochloromethane	ND	ug/L	0.50	0.20		
10/1/2014	8260C	1410010910	2-Propanol	ND	ug/L	40	8.6		
10/1/2014	8260C	1410010910	Dichlorodifluoromethane (CFC 12)	ND	ug/L	0.50	0.21		
10/1/2014	8260C	1410010910	Acrolein	ND	ug/L	5.0	3.0		
10/1/2014	8260C	1410010910	Chlorobenzene	ND	ug/L	0.50	0.20		

Analytical Results for Sampling Events at JER-1-688

Event Date	Analysis Method	Sample	Constituent	Result	Units	Quant Limit	Det Limit	Extract Efficiency	QA Flag
10/1/2014	8260C	1410010910	1,1,2-Trichloroethane	ND	ug/L	0.50	0.23		
10/1/2014	8260C	1410010910	trans-1,2-Dichloroethene	ND	ug/L	0.50	0.20		
10/1/2014	8260C	1410010910	trans-1,4-Dichloro-2-butene	ND	ug/L	0.52	0.52		
10/1/2014	8260C	1410010910	Trichloroethene (TCE)	ND	ug/L	0.50	0.20		
10/1/2014	8260C	1410010910	1,1,2,2-Tetrachloroethane	ND	ug/L	0.50	0.20		
10/1/2014	8260C	1410010910	Methyl tert-Butyl Ether	ND	ug/L	0.50	0.20		
10/1/2014	8260C	1410010910	Acrylonitrile	ND	ug/L	2.5	0.78		
10/1/2014	8260C	1410010910	m,p-Xylenes	ND	ug/L	1.0	0.26		
10/1/2014	8260C	1410010910	2-Hexanone	ND	ug/L	5.0	0.73		
10/1/2014	8260C	1410010910	1,2-Dichloroethane	ND	ug/L	0.50	0.20		
10/1/2014	8260C	1410010910	1,1,2-Trichloro-1,2,2-Trifluoroethane	ND	ug/L	0.50	0.31		
10/1/2014	8260C	1410010910	1,1-Dichloroethane (1,1-DCA)	ND	ug/L	0.50	0.20		
10/1/2014	8260C	1410010910	1,1-Dichloroethene	ND	ug/L	0.50	0.28		
10/1/2014	8260C	1410010910	1,2,3-Trichloropropane	ND	ug/L	0.50	0.32		
10/1/2014	8260C	1410010910	1,2-Dichloro-1,1,2-trifluoroethane (CFC 123a)	ND	ug/L	0.50	0.20		
10/1/2014	8260C	1410010910	1,1,1,2-Tetrachloroethane	ND	ug/L	0.50	0.20		
10/1/2014	8260C	1410010910	1,1,1-Trichloroethane (TCA)	ND	ug/L	0.50	0.36		
10/1/2014	8260C	1410010910	Tetrahydrofuran (THF)	ND	ug/L	5.0	0.66		
10/1/2014	8260C	1410010910	2-Methyl-1-propanol (Isobutyl Alcohol)	ND	ug/L	100	8.1		
10/1/2014	8260C	1410010910	Vinyl Acetate	ND	ug/L	1.0	0.78		
10/1/2014	8260C	1410010910	Methylcyclohexane	ND	ug/L	1.0	0.27		
10/1/2014	8260C	1410010910	Propionitrile	ND	ug/L	2.5	1.7		
10/1/2014	8260C	1410010910	Styrene	ND	ug/L	0.50	0.20		
10/1/2014	8260C	1410010910	cis-1,3-Dichloropropene	ND	ug/L	0.50	0.20		
10/1/2014	8260C	1410010910	Tetrachloroethene (PCE)	ND	ug/L	0.50	0.20		
10/1/2014	8260C	1410010910	Benzene	ND	ug/L	0.50	0.20		
10/1/2014	8260C	1410010910	Toluene	ND	ug/L	0.50	0.20		
10/1/2014	8260C	1410010910	Iodomethane	ND	ug/L	5.0	0.27		
10/1/2014	8260C	1410010910	Trichlorofluoromethane (CFC 11)	ND	ug/L	0.50	0.20		
10/1/2014	8260C	1410010910	1,2-Dibromo-3-chloropropane (DBCP)	ND	ug/L	1.0	0.74		
10/1/2014	8260C	1410010910	Vinyl Chloride	0.83	ug/L	0.50	0.22		
10/1/2014	8260C	1410010910	cis-1,2-Dichloroethene	ND	ug/L	0.50	0.20		
10/1/2014	8260C	1410010910	1,2-Dibromoethane	ND	ug/L	0.50	0.24		
10/1/2014	TAP 01-04	1410010911	N-Nitrosodimethylamine	1.9	ng/L	0.47	0.31		
10/1/2014	TAP 01-04	1410010911	N-Nitrodimethylamine	ND	ng/L	0.47	0.19		
10/1/2014	SW9060	1410010912	Total Organic Carbon	14	mg/l	1.0	0.16		

Analytical Results for Sampling Events at JER-1-688

Event Date	Analysis Method	Sample	Constituent	Result	Units	Quant Limit	Det Limit	Extract Efficiency	QA Flag
10/1/2014	SM 2540 C	1410010913	Total Dissolved Solids (TDS)	923	mg/L	10	5		
10/1/2014	6010C	1410010914	Boron, Total	0.11	mg/L	0.20	0.03		J
10/1/2014	6010C	1410010914	Magnesium, Total	43	mg/L	1.0	0.02		
10/1/2014	6010C	1410010914	Molybdenum, Total	0.011	mg/L	0.025	0.002		J
10/1/2014	6010C	1410010914	Chromium, Total	ND	mg/L	0.010	0.0009		
10/1/2014	6020A	1410010914	Arsenic, Total	0.0006	mg/L	0.0010	0.0003		J
10/1/2014	6020A	1410010914	Antimony, Total	ND	mg/L	0.0010	0.0002		
10/1/2014	6010C	1410010914	Aluminum, Total	ND	mg/L	0.10	0.03		
10/1/2014	6010C	1410010914	Beryllium, Total	ND	mg/L	0.0030	0.0002		
10/1/2014	6010C	1410010914	Cobalt, Total	ND	mg/L	0.050	0.002		
10/1/2014	6010C	1410010914	Barium, Total	0.046	mg/L	0.020	0.004		
10/1/2014	6010C	1410010914	Calcium, Total	56.4	mg/L	1.0	0.2		
10/1/2014	6010C	1410010914	Cadmium, Total	ND	mg/L	0.0050	0.0005		
10/1/2014	6010C	1410010914	Lead, Total	ND	mg/L	0.050	0.002		
10/1/2014	6010C	1410010914	Sodium, Total	170	mg/L	5.0	0.5		
10/1/2014	6010C	1410010914	Silver, Total	ND	mg/L	0.010	0.0009		
10/1/2014	6010C	1410010914	Iron, Total	0.05	mg/L	0.10	0.02		J
10/1/2014	6010C	1410010914	Copper, Total	ND	mg/L	0.020	0.004		
10/1/2014	6010C	1410010914	Vanadium, Total	ND	mg/L	0.050	0.0007		
10/1/2014	6010C	1410010914	Tin, Total	ND	mg/L	0.50	0.05		
10/1/2014	6010C	1410010914	Strontium, Total	1.58	mg/L	0.10	0.002		
10/1/2014	6010C	1410010914	Selenium, Total	ND	mg/L	0.010	0.003		
10/1/2014	6010C	1410010914	Potassium, Total	5.4	mg/L	2.0	0.2		
10/1/2014	6010C	1410010914	Nickel, Total	0.003	mg/L	0.040	0.002		J
10/1/2014	6010C	1410010914	Zinc, Total	0.089	mg/L	0.020	0.005		
10/1/2014	7470A	1410010914	Mercury, Total	ND	mg/L	0.00020	0.00003		
10/1/2014	6010C	1410010914	Manganese, Total	0.358	mg/L	0.010	0.002		
10/1/2014	6020A	1410010914	Thallium, Total	ND	mg/L	0.0010	0.00004		
10/1/2014	353.2	1410010935	Nitrate+Nitrite as Nitrogen	0.028	mg/L	0.050	0.002		J
10/1/2014	PARAMS	1410021030	Temperature	26.47	ºC	NA	NA		
10/1/2014	PARAMS	1410021030	Turbidity	2.00	NTU	NA	NA		
10/1/2014	PARAMS	1410021030	pH	6.95	NA	NA	NA		
10/1/2014	PARAMS	1410021030	DO	2.56	mg/L	NA	NA		
10/1/2014	PARAMS	1410021030	Conductivity	1029	µS/cm	NA	NA		
10/1/2014	8260C	1410021040	2-Hexanone	ND	ug/L	5.0	0.73		
10/1/2014	8260C	1410021040	Trichloroethene (TCE)	1.5	ug/L	0.50	0.20		

Analytical Results for Sampling Events at JER-1-688

Event Date	Analysis Method	Sample	Constituent	Result	Units	Quant Limit	Det Limit	Extract Efficiency	QA Flag
10/1/2014	8260C	1410021040	Trichlorofluoromethane (CFC 11)	ND	ug/L	0.50	0.20		
10/1/2014	8260C	1410021040	Vinyl Acetate	ND	ug/L	1.0	0.78		
10/1/2014	8260C	1410021040	Methyl tert-Butyl Ether	ND	ug/L	0.50	0.20		
10/1/2014	8260C	1410021040	Acrylonitrile	ND	ug/L	2.5	0.78		
10/1/2014	8260C	1410021040	2,2-Dichloro-1,1,1-trifluoroethane (CFC 123)	ND	ug/L	0.50	0.32		
10/1/2014	8260C	1410021040	2-Chloro-1,3-butadiene	ND	ug/L	0.50	0.22		
10/1/2014	8260C	1410021040	Ethylbenzene	ND	ug/L	0.50	0.20		
10/1/2014	8260C	1410021040	Dibromochloromethane	ND	ug/L	0.50	0.20		
10/1/2014	8260C	1410021040	2-Propanol	ND	ug/L	40	8.6		
10/1/2014	8260C	1410021040	Acetone	ND	ug/L	5.0	1.3		
10/1/2014	8260C	1410021040	4-Methyl-2-pentanone	ND	ug/L	2.0	0.20		
10/1/2014	8260C	1410021040	Toluene	ND	ug/L	0.50	0.20		
10/1/2014	8260C	1410021040	2-Butanone (MEK)	ND	ug/L	5.0	0.81		
10/1/2014	8260C	1410021040	Acrolein	ND	ug/L	5.0	3.0		
10/1/2014	8260C	1410021040	Vinyl Chloride	0.22	ug/L	0.50	0.22		J
10/1/2014	8260C	1410021040	Dibromomethane	ND	ug/L	0.50	0.22		
10/1/2014	8260C	1410021040	Dichlorodifluoromethane (CFC 12)	ND	ug/L	0.50	0.21		
10/1/2014	8260C	1410021040	Dichlorofluoromethane (CFC 21)	ND	ug/L	0.50	0.20		
10/1/2014	8260C	1410021040	Dichloromethane	ND	ug/L	0.50	0.20		
10/1/2014	8260C	1410021040	Ethyl Methacrylate	ND	ug/L	0.50	0.20		
10/1/2014	8260C	1410021040	Methacrylonitrile	ND	ug/L	1.0	0.50		
10/1/2014	8260C	1410021040	Iodomethane	ND	ug/L	5.0	0.27		
10/1/2014	8260C	1410021040	1,1,2,2-Tetrachloroethane	ND	ug/L	0.50	0.20		
10/1/2014	8260C	1410021040	Methyl Methacrylate	ND	ug/L	0.50	0.39		
10/1/2014	8260C	1410021040	Cyclohexane	ND	ug/L	1.0	0.25		
10/1/2014	8260C	1410021040	Methylcyclohexane	ND	ug/L	1.0	0.27		
10/1/2014	8260C	1410021040	Chloromethane	ND	ug/L	0.50	0.20		
10/1/2014	8260C	1410021040	Propionitrile	ND	ug/L	2.5	1.7		
10/1/2014	8260C	1410021040	Tetrachloroethene (PCE)	ND	ug/L	0.50	0.20		
10/1/2014	8260C	1410021040	3-Chloro-1-propene (Allyl Chloride)	ND	ug/L	0.50	0.25		
10/1/2014	8260C	1410021040	trans-1,3-Dichloropropene	ND	ug/L	0.50	0.20		
10/1/2014	8260C	1410021040	1,1-Dichloroethene	ND	ug/L	0.50	0.28		
10/1/2014	8260C	1410021040	1,2-Dibromo-3-chloropropane (DBCP)	ND	ug/L	1.0	0.74		
10/1/2014	8260C	1410021040	1,2-Dibromoethane	ND	ug/L	0.50	0.24		
10/1/2014	8260C	1410021040	1,2-Dichloroethane	ND	ug/L	0.50	0.20		
10/1/2014	8260C	1410021040	1,2-Dichloropropane	ND	ug/L	0.50	0.20		
10/1/2014	8260C	1410021040	1,4-Dioxane	ND	ug/L	40	18		
10/1/2014	8260C	1410021040	1,1,2-Trichloro-1,2,2-Trifluoroethane	0.44	ug/L	0.50	0.31		J

Analytical Results for Sampling Events at JER-1-688

Event Date	Analysis Method	Sample	Constituent	Result	Units	Quant Limit	Det Limit	Extract Efficiency	QA Flag
10/1/2014	8260C	1410021040	trans-1,4-Dichloro-2-butene	ND	ug/L	0.52	0.52		
10/1/2014	8260C	1410021040	1,1-Dichloroethane (1,1-DCA)	ND	ug/L	0.50	0.20		
10/1/2014	8260C	1410021040	cis-1,3-Dichloropropene	ND	ug/L	0.50	0.20		
10/1/2014	8260C	1410021040	m,p-Xylenes	ND	ug/L	1.0	0.26		
10/1/2014	8260C	1410021040	o-Xylene	ND	ug/L	0.50	0.20		
10/1/2014	8260C	1410021040	Tetrahydrofuran (THF)	ND	ug/L	5.0	0.66		
10/1/2014	8260C	1410021040	trans-1,2-Dichloroethene	ND	ug/L	0.50	0.20		
10/1/2014	8260C	1410021040	2-Methyl-1-propanol (Isobutyl Alcohol)	ND	ug/L	100	8.1		
10/1/2014	8260C	1410021040	1,2-Dichloro-1,1,2-trifluoroethane (CFC 123a)	ND	ug/L	0.50	0.20		
10/1/2014	8260C	1410021040	Chloroform	ND	ug/L	0.50	0.20		
10/1/2014	8260C	1410021040	1,1,2-Trichloroethane	ND	ug/L	0.50	0.23		
10/1/2014	8260C	1410021040	Bromodichloromethane	ND	ug/L	0.50	0.32		
10/1/2014	8260C	1410021040	Bromoform	ND	ug/L	1.0	0.21		
10/1/2014	8260C	1410021040	Bromomethane	ND	ug/L	0.50	0.24		
10/1/2014	8260C	1410021040	Carbon Disulfide	ND	ug/L	0.50	0.20		
10/1/2014	8260C	1410021040	Carbon Tetrachloride	ND	ug/L	0.50	0.45		
10/1/2014	8260C	1410021040	Chloroethane	ND	ug/L	0.50	0.22		
10/1/2014	8260C	1410021040	Benzene	ND	ug/L	0.50	0.20		
10/1/2014	8260C	1410021040	Acetonitrile	ND	ug/L	25	3.7		
10/1/2014	8260C	1410021040	1,2,3-Trichloropropane	ND	ug/L	0.50	0.32		
10/1/2014	8260C	1410021040	1,1,1,2-Tetrachloroethane	ND	ug/L	0.50	0.20		
10/1/2014	8260C	1410021040	Styrene	ND	ug/L	0.50	0.20		
10/1/2014	8260C	1410021040	1,1,1-Trichloroethane (TCA)	ND	ug/L	0.50	0.36		
10/1/2014	8260C	1410021040	cis-1,2-Dichloroethene	ND	ug/L	0.50	0.20		
10/1/2014	8260C	1410021040	Chlorobenzene	0.33	ug/L	0.50	0.20		J
10/1/2014	TAP 01-04	1410021041	N-Nitrodimethylamine	ND	ng/L	0.48	0.19		
10/1/2014	TAP 01-04	1410021041	N-Nitrosodimethylamine	2	ng/L	0.48	0.31		
10/1/2014	SW9060	1410021042	Total Organic Carbon	3.5	mg/l	1.0	0.16		
10/1/2014	SM 2540 C	1410021043	Total Dissolved Solids (TDS)	787	mg/L	10	5		
10/1/2014	6020A	1410021044	Arsenic, Total	0.0009	mg/L	0.0010	0.0003		J
10/1/2014	6010C	1410021044	Copper, Total	ND	mg/L	0.020	0.004		
10/1/2014	6010C	1410021044	Cadmium, Total	ND	mg/L	0.0050	0.0005		
10/1/2014	6010C	1410021044	Silver, Total	ND	mg/L	0.010	0.0009		
10/1/2014	7470A	1410021044	Mercury, Total	ND	mg/L	0.00020	0.00003		
10/1/2014	6010C	1410021044	Cobalt, Total	ND	mg/L	0.050	0.002		
10/1/2014	6010C	1410021044	Manganese, Total	0.353	mg/L	0.010	0.002		

Analytical Results for Sampling Events at JER-1-688

Event Date	Analysis Method	Sample	Constituent	Result	Units	Quant Limit	Det Limit	Extract Efficiency	QA Flag
10/1/2014	6010C	1410021044	Barium, Total	0.046	mg/L	0.020	0.004		
10/1/2014	6010C	1410021044	Molybdenum, Total	0.015	mg/L	0.025	0.002		J
10/1/2014	6010C	1410021044	Lead, Total	ND	mg/L	0.050	0.002		
10/1/2014	6010C	1410021044	Sodium, Total	80.2	mg/L	1.0	0.09		
10/1/2014	6010C	1410021044	Magnesium, Total	51.3	mg/L	1.0	0.02		
10/1/2014	6010C	1410021044	Beryllium, Total	ND	mg/L	0.0030	0.0002		
10/1/2014	6010C	1410021044	Nickel, Total	ND	mg/L	0.040	0.002		
10/1/2014	6010C	1410021044	Potassium, Total	4	mg/L	2.0	0.2		
10/1/2014	6010C	1410021044	Iron, Total	0.09	mg/L	0.10	0.02		J
10/1/2014	6020A	1410021044	Antimony, Total	0.0003	mg/L	0.0010	0.0002		J
10/1/2014	6010C	1410021044	Aluminum, Total	ND	mg/L	0.10	0.03		
10/1/2014	6010C	1410021044	Zinc, Total	0.059	mg/L	0.020	0.005		
10/1/2014	6010C	1410021044	Vanadium, Total	0.002	mg/L	0.050	0.0007		J
10/1/2014	6010C	1410021044	Tin, Total	ND	mg/L	0.50	0.05		
10/1/2014	6010C	1410021044	Chromium, Total	ND	mg/L	0.010	0.0009		
10/1/2014	6010C	1410021044	Strontium, Total	2.16	mg/L	0.10	0.002		
10/1/2014	6010C	1410021044	Selenium, Total	ND	mg/L	0.010	0.003		
10/1/2014	6010C	1410021044	Boron, Total	0.08	mg/L	0.20	0.03		J
10/1/2014	6020A	1410021044	Thallium, Total	ND	mg/L	0.0010	0.00004		
10/1/2014	6010C	1410021044	Calcium, Total	75.1	mg/L	1.0	0.2		
10/1/2014	353.2	1410021045	Nitrate+Nitrite as Nitrogen	0.467	mg/L	0.050	0.002		
10/1/2014	PARAMS	1410021405	Temperature	26.33	ºC	NA	NA		
10/1/2014	PARAMS	1410021405	Turbidity	2.69	NTU	NA	NA		
10/1/2014	PARAMS	1410021405	pH	7.23	NA	NA	NA		
10/1/2014	PARAMS	1410021405	Conductivity	1013	µS/cm	NA	NA		
10/1/2014	PARAMS	1410021405	DO	1.66	mg/L	NA	NA		
10/1/2014	PARAMS	1410021405	ORP	-42	mV	NA	NA		
10/1/2014	8260C	1410021406	Dibromochloromethane	ND	ug/L	0.50	0.20		
10/1/2014	8260C	1410021406	Cyclohexane	ND	ug/L	1.0	0.25		
10/1/2014	8260C	1410021406	Acrylonitrile	ND	ug/L	2.5	0.78		
10/1/2014	8260C	1410021406	Chloroform	ND	ug/L	0.50	0.20		
10/1/2014	8260C	1410021406	Chlorobenzene	0.24	ug/L	0.50	0.20		J
10/1/2014	8260C	1410021406	Carbon Disulfide	ND	ug/L	0.50	0.20		
10/1/2014	8260C	1410021406	Bromomethane	ND	ug/L	0.50	0.24		
10/1/2014	8260C	1410021406	Dibromomethane	ND	ug/L	0.50	0.22		
10/1/2014	8260C	1410021406	Bromodichloromethane	ND	ug/L	0.50	0.32		

Analytical Results for Sampling Events at JER-1-688

Event Date	Analysis Method	Sample	Constituent	Result	Units	Quant Limit	Det Limit	Extract Efficiency	QA Flag
10/1/2014	8260C	1410021406	Chloroethane	ND	ug/L	0.50	0.22		
10/1/2014	8260C	1410021406	Bromoform	ND	ug/L	1.0	0.21		
10/1/2014	8260C	1410021406	Dichlorodifluoromethane (CFC 12)	ND	ug/L	0.50	0.21		
10/1/2014	8260C	1410021406	Dichlorofluoromethane (CFC 21)	ND	ug/L	0.50	0.20		
10/1/2014	8260C	1410021406	Dichloromethane	ND	ug/L	0.50	0.20		
10/1/2014	8260C	1410021406	Benzene	ND	ug/L	0.50	0.20		
10/1/2014	8260C	1410021406	Ethylbenzene	ND	ug/L	0.50	0.20		
10/1/2014	8260C	1410021406	1,2-Dichloro-1,1,2-trifluoroethane (CFC 123a)	ND	ug/L	0.50	0.20		
10/1/2014	8260C	1410021406	2-Chloro-1,3-butadiene	ND	ug/L	0.50	0.22		
10/1/2014	8260C	1410021406	2-Methyl-1-propanol (Isobutyl Alcohol)	ND	ug/L	100	8.1		
10/1/2014	8260C	1410021406	2-Propanol	ND	ug/L	40	8.6		
10/1/2014	8260C	1410021406	3-Chloro-1-propene (Allyl Chloride)	ND	ug/L	0.50	0.25		
10/1/2014	8260C	1410021406	4-Methyl-2-pentanone	ND	ug/L	2.0	0.20		
10/1/2014	8260C	1410021406	Ethyl Methacrylate	ND	ug/L	0.50	0.20		
10/1/2014	8260C	1410021406	Iodomethane	ND	ug/L	5.0	0.27		
10/1/2014	8260C	1410021406	cis-1,2-Dichloroethene	ND	ug/L	0.50	0.20		
10/1/2014	8260C	1410021406	Trichlorofluoromethane (CFC 11)	ND	ug/L	0.50	0.20		
10/1/2014	8260C	1410021406	Vinyl Acetate	ND	ug/L	1.0	0.78		
10/1/2014	8260C	1410021406	Methyl tert-Butyl Ether	ND	ug/L	0.50	0.20		
10/1/2014	8260C	1410021406	Methylcyclohexane	ND	ug/L	1.0	0.27		
10/1/2014	8260C	1410021406	Propionitrile	ND	ug/L	2.5	1.7		
10/1/2014	8260C	1410021406	Styrene	ND	ug/L	0.50	0.20		
10/1/2014	8260C	1410021406	Tetrachloroethene (PCE)	ND	ug/L	0.50	0.20		
10/1/2014	8260C	1410021406	Tetrahydrofuran (THF)	ND	ug/L	5.0	0.66		
10/1/2014	8260C	1410021406	trans-1,3-Dichloropropene	ND	ug/L	0.50	0.20		
10/1/2014	8260C	1410021406	Trichloroethene (TCE)	1.4	ug/L	0.50	0.20		
10/1/2014	8260C	1410021406	Chloromethane	ND	ug/L	0.50	0.20		
10/1/2014	8260C	1410021406	Vinyl Chloride	ND	ug/L	0.50	0.22		
10/1/2014	8260C	1410021406	1,1-Dichloroethene	ND	ug/L	0.50	0.28		
10/1/2014	8260C	1410021406	cis-1,3-Dichloropropene	ND	ug/L	0.50	0.20		
10/1/2014	8260C	1410021406	m,p-Xylenes	ND	ug/L	1.0	0.26		
10/1/2014	8260C	1410021406	o-Xylene	ND	ug/L	0.50	0.20		
10/1/2014	8260C	1410021406	Methyl Methacrylate	ND	ug/L	0.50	0.39		
10/1/2014	8260C	1410021406	trans-1,4-Dichloro-2-butene	ND	ug/L	0.52	0.52		
10/1/2014	8260C	1410021406	Acetone	ND	ug/L	5.0	1.3		
10/1/2014	8260C	1410021406	Toluene	ND	ug/L	0.50	0.20		
10/1/2014	8260C	1410021406	Methacrylonitrile	ND	ug/L	1.0	0.50		
10/1/2014	8260C	1410021406	1,4-Dioxane	ND	ug/L	40	18		

Analytical Results for Sampling Events at JER-1-688

Event Date	Analysis Method	Sample	Constituent	Result	Units	Quant Limit	Det Limit	Extract Efficiency	QA Flag
10/1/2014	8260C	1410021406	Carbon Tetrachloride	ND	ug/L	0.50	0.45		
10/1/2014	8260C	1410021406	1,2-Dichloroethane	ND	ug/L	0.50	0.20		
10/1/2014	8260C	1410021406	Acetonitrile	ND	ug/L	25	3.7		
10/1/2014	8260C	1410021406	1,2-Dibromo-3-chloropropane (DBCP)	ND	ug/L	1.0	0.74		
10/1/2014	8260C	1410021406	1,2-Dichloropropane	ND	ug/L	0.50	0.20		
10/1/2014	8260C	1410021406	2-Butanone (MEK)	ND	ug/L	5.0	0.81		
10/1/2014	8260C	1410021406	1,1-Dichloroethane (1,1-DCA)	ND	ug/L	0.50	0.20		
10/1/2014	8260C	1410021406	trans-1,2-Dichloroethene	ND	ug/L	0.50	0.20		
10/1/2014	8260C	1410021406	1,1,2-Trichloro-1,2,2-Trifluoroethane	0.39	ug/L	0.50	0.31		J
10/1/2014	8260C	1410021406	1,2-Dibromoethane	ND	ug/L	0.50	0.24		
10/1/2014	8260C	1410021406	Acrolein	ND	ug/L	5.0	3.0		
10/1/2014	8260C	1410021406	1,1,2-Trichloroethane	ND	ug/L	0.50	0.23		
10/1/2014	8260C	1410021406	1,1,1,2-Tetrachloroethane	ND	ug/L	0.50	0.20		
10/1/2014	8260C	1410021406	2-Hexanone	ND	ug/L	5.0	0.73		
10/1/2014	8260C	1410021406	2,2-Dichloro-1,1,1-trifluoroethane (CFC 123)	ND	ug/L	0.50	0.32		
10/1/2014	8260C	1410021406	1,2,3-Trichloropropane	ND	ug/L	0.50	0.32		
10/1/2014	8260C	1410021406	1,1,1-Trichloroethane (TCA)	ND	ug/L	0.50	0.36		
10/1/2014	8260C	1410021406	1,1,2,2-Tetrachloroethane	ND	ug/L	0.50	0.20		
10/1/2014	TAP 01-04	1410021407	N-Nitrosodimethylamine	0.91	ng/L	0.47	0.31		
10/1/2014	TAP 01-04	1410021407	N-Nitrodimethylamine	ND	ng/L	0.47	0.19		
10/1/2014	SW9060	1410021408	Total Organic Carbon	2.2	mg/l	1.0	0.16		
10/1/2014	SM 2540 C	1410021409	Total Dissolved Solids (TDS)	772	mg/L	10	5		
10/1/2014	6010C	1410021410	Magnesium, Total	53.5	mg/L	1.0	0.02		
10/1/2014	6010C	1410021410	Silver, Total	ND	mg/L	0.010	0.0009		
10/1/2014	6010C	1410021410	Strontium, Total	2.22	mg/L	0.10	0.002		
10/1/2014	6010C	1410021410	Vanadium, Total	0.003	mg/L	0.050	0.0007		J
10/1/2014	6010C	1410021410	Tin, Total	ND	mg/L	0.50	0.05		
10/1/2014	6010C	1410021410	Zinc, Total	0.049	mg/L	0.020	0.005		
10/1/2014	6010C	1410021410	Potassium, Total	3.9	mg/L	2.0	0.2		
10/1/2014	6010C	1410021410	Molybdenum, Total	0.014	mg/L	0.025	0.002		J
10/1/2014	7470A	1410021410	Mercury, Total	ND	mg/L	0.00020	0.00003		
10/1/2014	6010C	1410021410	Selenium, Total	ND	mg/L	0.010	0.003		
10/1/2014	6010C	1410021410	Sodium, Total	70.1	mg/L	1.0	0.09		
10/1/2014	6010C	1410021410	Manganese, Total	0.322	mg/L	0.010	0.002		
10/1/2014	6020A	1410021410	Thallium, Total	ND	mg/L	0.0010	0.00004		
10/1/2014	6010C	1410021410	Chromium, Total	ND	mg/L	0.010	0.0009		

Analytical Results for Sampling Events at JER-1-688

Event Date	Analysis Method	Sample	Constituent	Result	Units	Quant Limit	Det Limit	Extract Efficiency	QA Flag
10/1/2014	6010C	1410021410	Cadmium, Total	ND	mg/L	0.0050	0.0005		
10/1/2014	6010C	1410021410	Nickel, Total	ND	mg/L	0.040	0.002		
10/1/2014	6010C	1410021410	Lead, Total	ND	mg/L	0.050	0.002		
10/1/2014	6010C	1410021410	Iron, Total	0.07	mg/L	0.10	0.02		J
10/1/2014	6010C	1410021410	Cobalt, Total	ND	mg/L	0.050	0.002		
10/1/2014	6010C	1410021410	Calcium, Total	78	mg/L	1.0	0.2		
10/1/2014	6010C	1410021410	Boron, Total	0.08	mg/L	0.20	0.03		J
10/1/2014	6010C	1410021410	Beryllium, Total	ND	mg/L	0.0030	0.0002		
10/1/2014	6010C	1410021410	Barium, Total	0.045	mg/L	0.020	0.004		
10/1/2014	6020A	1410021410	Arsenic, Total	0.0009	mg/L	0.0010	0.0003		J
10/1/2014	6020A	1410021410	Antimony, Total	0.0003	mg/L	0.0010	0.0002		J
10/1/2014	6010C	1410021410	Aluminum, Total	ND	mg/L	0.10	0.03		
10/1/2014	6010C	1410021410	Copper, Total	ND	mg/L	0.020	0.004		
10/1/2014	353.2	1410021411	Nitrate+Nitrite as Nitrogen	0.61	mg/L	0.10	0.003		
10/1/2014	PARAMS	1410030950	ORP	-25	mV	NA	NA		
10/1/2014	PARAMS	1410030950	Turbidity	1.20	NTU	NA	NA		
10/1/2014	PARAMS	1410030950	Temperature	25.65	ºC	NA	NA		
10/1/2014	PARAMS	1410030950	Conductivity	996	µS/cm	NA	NA		
10/1/2014	PARAMS	1410030950	pH	7.50	NA	NA	NA		
10/1/2014	PARAMS	1410030950	DO	27.7	mg/L	NA	NA		
10/1/2014	8260C	1410030954	Propionitrile	ND	ug/L	2.5	1.7		
10/1/2014	8260C	1410030954	Carbon Disulfide	ND	ug/L	0.50	0.20		
10/1/2014	8260C	1410030954	Bromomethane	ND	ug/L	0.50	0.24		
10/1/2014	8260C	1410030954	Bromoform	ND	ug/L	1.0	0.21		
10/1/2014	8260C	1410030954	Bromodichloromethane	ND	ug/L	0.50	0.32		
10/1/2014	8260C	1410030954	Acrylonitrile	ND	ug/L	2.5	0.78		
10/1/2014	8260C	1410030954	1,2-Dichloro-1,1,2-trifluoroethane (CFC 123a)	ND	ug/L	0.50	0.20		
10/1/2014	8260C	1410030954	Acetonitrile	ND	ug/L	25	3.7		
10/1/2014	8260C	1410030954	Acetone	ND	ug/L	5.0	1.3		
10/1/2014	8260C	1410030954	4-Methyl-2-pentanone	ND	ug/L	2.0	0.20		
10/1/2014	8260C	1410030954	3-Chloro-1-propene (Allyl Chloride)	ND	ug/L	0.50	0.25		
10/1/2014	8260C	1410030954	2-Methyl-1-propanol (Isobutyl Alcohol)	ND	ug/L	100	8.1		
10/1/2014	8260C	1410030954	2-Propanol	ND	ug/L	40	8.6		
10/1/2014	8260C	1410030954	Cyclohexane	ND	ug/L	1.0	0.25		
10/1/2014	8260C	1410030954	Chlorobenzene	ND	ug/L	0.50	0.20		
10/1/2014	8260C	1410030954	Benzene	ND	ug/L	0.50	0.20		

Analytical Results for Sampling Events at JER-1-688

Event Date	Analysis Method	Sample	Constituent	Result	Units	Quant Limit	Det Limit	Extract Efficiency	QA Flag
10/1/2014	8260C	1410030954	Methyl Methacrylate	ND	ug/L	0.50	0.39		
10/1/2014	8260C	1410030954	cis-1,3-Dichloropropene	ND	ug/L	0.50	0.20		
10/1/2014	8260C	1410030954	1,1,2,2-Tetrachloroethane	ND	ug/L	0.50	0.20		
10/1/2014	8260C	1410030954	Dichlorofluoromethane (CFC 21)	ND	ug/L	0.50	0.20		
10/1/2014	8260C	1410030954	Methylcyclohexane	ND	ug/L	1.0	0.27		
10/1/2014	8260C	1410030954	Chloromethane	ND	ug/L	0.50	0.20		
10/1/2014	8260C	1410030954	Methyl tert-Butyl Ether	ND	ug/L	0.50	0.20		
10/1/2014	8260C	1410030954	Dibromomethane	ND	ug/L	0.50	0.22		
10/1/2014	8260C	1410030954	Methacrylonitrile	ND	ug/L	1.0	0.50		
10/1/2014	8260C	1410030954	Dichlorodifluoromethane (CFC 12)	ND	ug/L	0.50	0.21		
10/1/2014	8260C	1410030954	Acrolein	ND	ug/L	5.0	3.0		
10/1/2014	8260C	1410030954	Dichloromethane	ND	ug/L	0.50	0.20		
10/1/2014	8260C	1410030954	Ethyl Methacrylate	ND	ug/L	0.50	0.20		
10/1/2014	8260C	1410030954	Ethylbenzene	ND	ug/L	0.50	0.20		
10/1/2014	8260C	1410030954	Iodomethane	ND	ug/L	5.0	0.27		
10/1/2014	8260C	1410030954	Chloroform	ND	ug/L	0.50	0.20		
10/1/2014	8260C	1410030954	Dibromochloromethane	ND	ug/L	0.50	0.20		
10/1/2014	8260C	1410030954	trans-1,3-Dichloropropene	ND	ug/L	0.50	0.20		
10/1/2014	8260C	1410030954	Tetrachloroethene (PCE)	ND	ug/L	0.50	0.20		
10/1/2014	8260C	1410030954	Tetrahydrofuran (THF)	ND	ug/L	5.0	0.66		
10/1/2014	8260C	1410030954	Toluene	ND	ug/L	0.50	0.20		
10/1/2014	8260C	1410030954	Chloroethane	ND	ug/L	0.50	0.22		
10/1/2014	8260C	1410030954	1,1,1-Trichloroethane (TCA)	ND	ug/L	0.50	0.36		
10/1/2014	8260C	1410030954	1,1-Dichloroethane (1,1-DCA)	ND	ug/L	0.50	0.20		
10/1/2014	8260C	1410030954	1,1,2-Trichloro-1,2,2-Trifluoroethane	0.33	ug/L	0.50	0.31		J
10/1/2014	8260C	1410030954	2,2-Dichloro-1,1,1-trifluoroethane (CFC 123)	ND	ug/L	0.50	0.32		
10/1/2014	8260C	1410030954	1,1-Dichloroethene	ND	ug/L	0.50	0.28		
10/1/2014	8260C	1410030954	1,2,3-Trichloropropane	ND	ug/L	0.50	0.32		
10/1/2014	8260C	1410030954	1,2-Dibromo-3-chloropropane (DBCP)	ND	ug/L	1.0	0.74		
10/1/2014	8260C	1410030954	1,2-Dibromoethane	ND	ug/L	0.50	0.24		
10/1/2014	8260C	1410030954	1,2-Dichloroethane	ND	ug/L	0.50	0.20		
10/1/2014	8260C	1410030954	1,1,1,2-Tetrachloroethane	ND	ug/L	0.50	0.20		
10/1/2014	8260C	1410030954	1,1,2-Trichloroethane	ND	ug/L	0.50	0.23		
10/1/2014	8260C	1410030954	Trichloroethene (TCE)	1	ug/L	0.50	0.20		
10/1/2014	8260C	1410030954	2-Butanone (MEK)	ND	ug/L	5.0	0.81		
10/1/2014	8260C	1410030954	Styrene	ND	ug/L	0.50	0.20		
10/1/2014	8260C	1410030954	2-Chloro-1,3-butadiene	ND	ug/L	0.50	0.22		
10/1/2014	8260C	1410030954	Vinyl Chloride	ND	ug/L	0.50	0.22		

Analytical Results for Sampling Events at JER-1-688

Event Date	Analysis Method	Sample	Constituent	Result	Units	Quant Limit	Det Limit	Extract Efficiency	QA Flag
10/1/2014	8260C	1410030954	Trichlorofluoromethane (CFC 11)	ND	ug/L	0.50	0.20		
10/1/2014	8260C	1410030954	Vinyl Acetate	ND	ug/L	1.0	0.78		
10/1/2014	8260C	1410030954	1,4-Dioxane	ND	ug/L	40	18		
10/1/2014	8260C	1410030954	cis-1,2-Dichloroethene	ND	ug/L	0.50	0.20		
10/1/2014	8260C	1410030954	trans-1,4-Dichloro-2-butene	ND	ug/L	0.52	0.52		
10/1/2014	8260C	1410030954	1,2-Dichloropropane	ND	ug/L	0.50	0.20		
10/1/2014	8260C	1410030954	2-Hexanone	ND	ug/L	5.0	0.73		
10/1/2014	8260C	1410030954	trans-1,2-Dichloroethene	ND	ug/L	0.50	0.20		
10/1/2014	8260C	1410030954	o-Xylene	ND	ug/L	0.50	0.20		
10/1/2014	8260C	1410030954	m,p-Xylenes	ND	ug/L	1.0	0.26		
10/1/2014	8260C	1410030954	Carbon Tetrachloride	ND	ug/L	0.50	0.45		
10/1/2014	TAP 01-04	1410030955	N-Nitrodimethylamine	ND	ng/L	0.48	0.19		
10/1/2014	TAP 01-04	1410030955	N-Nitrosodimethylamine	0.51	ng/L	0.48	0.31		
10/1/2014	SW9060	1410030956	Total Organic Carbon	1.8	mg/l	1.0	0.16		
10/1/2014	SM 2540 C	1410030957	Total Dissolved Solids (TDS)	766	mg/L	10	5		
10/1/2014	6010C	1410030958	Aluminum, Total	ND	mg/L	0.10	0.03		
10/1/2014	6010C	1410030958	Barium, Total	0.045	mg/L	0.020	0.004		
10/1/2014	6010C	1410030958	Vanadium, Total	0.003	mg/L	0.050	0.0007		J
10/1/2014	6020A	1410030958	Antimony, Total	0.0003	mg/L	0.0010	0.0002		J
10/1/2014	6020A	1410030958	Arsenic, Total	0.0009	mg/L	0.0010	0.0003		J
10/1/2014	6010C	1410030958	Beryllium, Total	ND	mg/L	0.0030	0.0002		
10/1/2014	6010C	1410030958	Iron, Total	0.04	mg/L	0.10	0.02		J
10/1/2014	6010C	1410030958	Boron, Total	0.07	mg/L	0.20	0.03		J
10/1/2014	6010C	1410030958	Calcium, Total	84.4	mg/L	1.0	0.2		
10/1/2014	6010C	1410030958	Chromium, Total	ND	mg/L	0.010	0.0009		
10/1/2014	6010C	1410030958	Lead, Total	ND	mg/L	0.050	0.002		
10/1/2014	6010C	1410030958	Copper, Total	ND	mg/L	0.020	0.004		
10/1/2014	6010C	1410030958	Cadmium, Total	ND	mg/L	0.0050	0.0005		
10/1/2014	6010C	1410030958	Nickel, Total	ND	mg/L	0.040	0.002		
10/1/2014	6010C	1410030958	Cobalt, Total	ND	mg/L	0.050	0.002		
10/1/2014	7470A	1410030958	Mercury, Total	ND	mg/L	0.00020	0.00003		
10/1/2014	6020A	1410030958	Thallium, Total	ND	mg/L	0.0010	0.00004		
10/1/2014	6010C	1410030958	Magnesium, Total	55.9	mg/L	1.0	0.02		
10/1/2014	6010C	1410030958	Manganese, Total	0.305	mg/L	0.010	0.002		
10/1/2014	6010C	1410030958	Zinc, Total	0.02	mg/L	0.020	0.005		J
10/1/2014	6010C	1410030958	Selenium, Total	ND	mg/L	0.010	0.003		

Analytical Results for Sampling Events at JER-1-688

Event Date	Analysis Method	Sample	Constituent	Result	Units	Quant Limit	Det Limit	Extract Efficiency	QA Flag
10/1/2014	6010C	1410030958	Tin, Total	ND	mg/L	0.50	0.05		
10/1/2014	6010C	1410030958	Strontium, Total	2.31	mg/L	0.10	0.002		
10/1/2014	6010C	1410030958	Sodium, Total	61.7	mg/L	1.0	0.09		
10/1/2014	6010C	1410030958	Silver, Total	ND	mg/L	0.010	0.0009		
10/1/2014	6010C	1410030958	Potassium, Total	3.8	mg/L	2.0	0.2		
10/1/2014	6010C	1410030958	Molybdenum, Total	0.013	mg/L	0.025	0.002		J
10/1/2014	353.2	1410030959	Nitrate+Nitrite as Nitrogen	0.67	mg/L	0.10	0.003		
10/1/2014	PARAMS	1410061434	Conductivity	996	µS/cm	NA	NA		
10/1/2014	PARAMS	1410061434	Temperature	26.93	ºC	NA	NA		
10/1/2014	PARAMS	1410061434	pH	7.80	NA	NA	NA		
10/1/2014	PARAMS	1410061434	DO	2.68	mg/L	NA	NA		
10/1/2014	PARAMS	1410061434	Turbidity	1.08	NTU	NA	NA		
10/1/2014	PARAMS	1410061434	ORP	-50	mV	NA	NA		
10/1/2014	8260C	1410061435	Dichlorofluoromethane (CFC 21)	ND	ug/L	0.50	0.20		
10/1/2014	8260C	1410061435	Vinyl Chloride	ND	ug/L	0.50	0.22		
10/1/2014	8260C	1410061435	cis-1,2-Dichloroethene	ND	ug/L	0.50	0.20		
10/1/2014	8260C	1410061435	Styrene	ND	ug/L	0.50	0.20		
10/1/2014	8260C	1410061435	Carbon Disulfide	ND	ug/L	0.50	0.20		
10/1/2014	8260C	1410061435	2-Propanol	ND	ug/L	40	8.6		
10/1/2014	8260C	1410061435	4-Methyl-2-pentanone	ND	ug/L	2.0	0.20		
10/1/2014	8260C	1410061435	Acetone	ND	ug/L	5.0	1.3		
10/1/2014	8260C	1410061435	Acetonitrile	ND	ug/L	25	3.7		
10/1/2014	8260C	1410061435	Acrolein	ND	ug/L	5.0	3.0		
10/1/2014	8260C	1410061435	Acrylonitrile	ND	ug/L	2.5	0.78		
10/1/2014	8260C	1410061435	Benzene	ND	ug/L	0.50	0.20		
10/1/2014	8260C	1410061435	Bromodichloromethane	ND	ug/L	0.50	0.32		
10/1/2014	8260C	1410061435	Dichlorodifluoromethane (CFC 12)	ND	ug/L	0.50	0.21		
10/1/2014	8260C	1410061435	Vinyl Acetate	ND	ug/L	1.0	0.78		
10/1/2014	8260C	1410061435	Bromomethane	ND	ug/L	0.50	0.24		
10/1/2014	8260C	1410061435	Methylcyclohexane	ND	ug/L	1.0	0.27		
10/1/2014	8260C	1410061435	Tetrahydrofuran (THF)	ND	ug/L	5.0	0.66		
10/1/2014	8260C	1410061435	Dichloromethane	ND	ug/L	0.50	0.20		
10/1/2014	8260C	1410061435	Ethyl Methacrylate	ND	ug/L	0.50	0.20		
10/1/2014	8260C	1410061435	Ethylbenzene	ND	ug/L	0.50	0.20		
10/1/2014	8260C	1410061435	trans-1,2-Dichloroethene	ND	ug/L	0.50	0.20		
10/1/2014	8260C	1410061435	Iodomethane	ND	ug/L	5.0	0.27		

Analytical Results for Sampling Events at JER-1-688

Event Date	Analysis Method	Sample	Constituent	Result	Units	Quant Limit	Det Limit	Extract Efficiency	QA Flag
10/1/2014	8260C	1410061435	Methyl Methacrylate	ND	ug/L	0.50	0.39		
10/1/2014	8260C	1410061435	Methyl tert-Butyl Ether	ND	ug/L	0.50	0.20		
10/1/2014	8260C	1410061435	Trichlorofluoromethane (CFC 11)	ND	ug/L	0.50	0.20		
10/1/2014	8260C	1410061435	Propionitrile	ND	ug/L	2.5	1.7		
10/1/2014	8260C	1410061435	cis-1,3-Dichloropropene	ND	ug/L	0.50	0.20		
10/1/2014	8260C	1410061435	Tetrachloroethene (PCE)	ND	ug/L	0.50	0.20		
10/1/2014	8260C	1410061435	Dibromomethane	ND	ug/L	0.50	0.22		
10/1/2014	8260C	1410061435	Toluene	ND	ug/L	0.50	0.20		
10/1/2014	8260C	1410061435	Trichloroethene (TCE)	0.96	ug/L	0.50	0.20		
10/1/2014	8260C	1410061435	Methacrylonitrile	ND	ug/L	1.0	0.50		
10/1/2014	8260C	1410061435	2-Butanone (MEK)	ND	ug/L	5.0	0.81		
10/1/2014	8260C	1410061435	1,1-Dichloroethene	ND	ug/L	0.50	0.28		
10/1/2014	8260C	1410061435	1,2,3-Trichloropropane	ND	ug/L	0.50	0.32		
10/1/2014	8260C	1410061435	trans-1,3-Dichloropropene	ND	ug/L	0.50	0.20		
10/1/2014	8260C	1410061435	1,2-Dibromoethane	ND	ug/L	0.50	0.24		
10/1/2014	8260C	1410061435	1,1,1,2-Tetrachloroethane	ND	ug/L	0.50	0.20		
10/1/2014	8260C	1410061435	1,1-Dichloroethane (1,1-DCA)	ND	ug/L	0.50	0.20		
10/1/2014	8260C	1410061435	1,4-Dioxane	ND	ug/L	40	18		
10/1/2014	8260C	1410061435	2,2-Dichloro-1,1,1-trifluoroethane (CFC 123)	ND	ug/L	0.50	0.32		
10/1/2014	8260C	1410061435	2-Hexanone	ND	ug/L	5.0	0.73		
10/1/2014	8260C	1410061435	1,2-Dichloro-1,1,2-trifluoroethane (CFC 123a)	ND	ug/L	0.50	0.20		
10/1/2014	8260C	1410061435	o-Xylene	ND	ug/L	0.50	0.20		
10/1/2014	8260C	1410061435	1,2-Dibromo-3-chloropropane (DBCP)	ND	ug/L	1.0	0.74		
10/1/2014	8260C	1410061435	2-Methyl-1-propanol (Isobutyl Alcohol)	ND	ug/L	100	8.1		
10/1/2014	8260C	1410061435	Carbon Tetrachloride	ND	ug/L	0.50	0.45		
10/1/2014	8260C	1410061435	1,2-Dichloropropane	ND	ug/L	0.50	0.20		
10/1/2014	8260C	1410061435	Bromoform	ND	ug/L	1.0	0.21		
10/1/2014	8260C	1410061435	Chloroethane	ND	ug/L	0.50	0.22		
10/1/2014	8260C	1410061435	Chloroform	ND	ug/L	0.50	0.20		
10/1/2014	8260C	1410061435	Chloromethane	ND	ug/L	0.50	0.20		
10/1/2014	8260C	1410061435	Cyclohexane	ND	ug/L	1.0	0.25		
10/1/2014	8260C	1410061435	Dibromochloromethane	ND	ug/L	0.50	0.20		
10/1/2014	8260C	1410061435	1,1,2-Trichloro-1,2,2-Trifluoroethane	0.33	ug/L	0.50	0.31		J
10/1/2014	8260C	1410061435	2-Chloro-1,3-butadiene	ND	ug/L	0.50	0.22		
10/1/2014	8260C	1410061435	Chlorobenzene	ND	ug/L	0.50	0.20		
10/1/2014	8260C	1410061435	1,2-Dichloroethane	ND	ug/L	0.50	0.20		
10/1/2014	8260C	1410061435	m,p-Xylenes	ND	ug/L	1.0	0.26		
10/1/2014	8260C	1410061435	trans-1,4-Dichloro-2-butene	ND	ug/L	0.52	0.52		

Analytical Results for Sampling Events at JER-1-688

Event Date	Analysis Method	Sample	Constituent	Result	Units	Quant Limit	Det Limit	Extract Efficiency	QA Flag
10/1/2014	8260C	1410061435	1,1,1-Trichloroethane (TCA)	ND	ug/L	0.50	0.36		
10/1/2014	8260C	1410061435	1,1,2,2-Tetrachloroethane	ND	ug/L	0.50	0.20		
10/1/2014	8260C	1410061435	1,1,2-Trichloroethane	ND	ug/L	0.50	0.23		
10/1/2014	8260C	1410061435	3-Chloro-1-propene (Allyl Chloride)	ND	ug/L	0.50	0.25		
10/1/2014	TAP 01-04	1410061436	N-Nitrodimethylamine	ND	ng/L	0.48	0.19		
10/1/2014	TAP 01-04	1410061436	N-Nitrosodimethylamine	0.7	ng/L	0.48	0.31		
10/1/2014	SW9060	1410061437	Total Organic Carbon	1.8	mg/l	1.0	0.16		
10/1/2014	SM 2540 C	1410061438	Total Dissolved Solids (TDS)	817	mg/L	14	7		
10/1/2014	6010C	1410061439	Sodium, Total	68.4	mg/L	1.0	0.09		
10/1/2014	6010C	1410061439	Lead, Total	0.003	mg/L	0.050	0.002		J
10/1/2014	6010C	1410061439	Magnesium, Total	63.8	mg/L	1.0	0.02		
10/1/2014	6010C	1410061439	Manganese, Total	0.324	mg/L	0.010	0.002		
10/1/2014	7470A	1410061439	Mercury, Total	ND	mg/L	0.00020	0.00003		
10/1/2014	6010C	1410061439	Molybdenum, Total	0.013	mg/L	0.025	0.002		J
10/1/2014	6010C	1410061439	Nickel, Total	ND	mg/L	0.040	0.002		
10/1/2014	6010C	1410061439	Vanadium, Total	0.003	mg/L	0.050	0.0007		J RB
10/1/2014	6010C	1410061439	Iron, Total	0.04	mg/L	0.10	0.02		J
10/1/2014	6010C	1410061439	Zinc, Total	0.02	mg/L	0.020	0.005		J
10/1/2014	6010C	1410061439	Tin, Total	ND	mg/L	0.50	0.05		
10/1/2014	6020A	1410061439	Thallium, Total	ND	mg/L	0.0010	0.00004		
10/1/2014	6010C	1410061439	Strontium, Total	2.44	mg/L	0.10	0.002		
10/1/2014	6010C	1410061439	Cadmium, Total	ND	mg/L	0.0050	0.0005		
10/1/2014	6020A	1410061439	Arsenic, Total	0.001	mg/L	0.0010	0.0003		
10/1/2014	6010C	1410061439	Potassium, Total	4.4	mg/L	2.0	0.2		
10/1/2014	6010C	1410061439	Copper, Total	ND	mg/L	0.020	0.004		
10/1/2014	6020A	1410061439	Antimony, Total	ND	mg/L	0.0010	0.0002		
10/1/2014	6010C	1410061439	Chromium, Total	ND	mg/L	0.010	0.0009		
10/1/2014	6010C	1410061439	Barium, Total	0.049	mg/L	0.020	0.004		
10/1/2014	6010C	1410061439	Beryllium, Total	ND	mg/L	0.0030	0.0002		
10/1/2014	6010C	1410061439	Boron, Total	0.14	mg/L	0.20	0.03		J RB
10/1/2014	6010C	1410061439	Silver, Total	ND	mg/L	0.010	0.0009		
10/1/2014	6010C	1410061439	Calcium, Total	100	mg/L	1.0	0.2		
10/1/2014	6010C	1410061439	Selenium, Total	0.004	mg/L	0.010	0.003		J
10/1/2014	6010C	1410061439	Cobalt, Total	ND	mg/L	0.050	0.002		
10/1/2014	6010C	1410061439	Aluminum, Total	ND	mg/L	0.10	0.03		

Analytical Results for Sampling Events at JER-1-688

Event Date	Analysis Method	Sample	Constituent	Result	Units	Quant Limit	Det Limit	Extract Efficiency	QA Flag
10/1/2014	353.2	1410061440	Nitrate+Nitrite as Nitrogen	0.665	mg/L	0.050	0.002		

Analytical Results for Sampling Events at JER-2-508

Event Date	Analysis Method	Sample	Constituent	Result	Units	Quant Limit	Det Limit	Extract Efficiency	QA Flag
3/16/2015	PARAMS	1503171025Z	Formation Pressure	22.63	psia	NA	NA		
3/16/2015	PARAMS	1503171025Z	Temperature	23.2	ºC	NA	NA		
3/16/2015	PARAMS	1503171025Z	Atmospheric Pressure	12.65	psia	NA	NA		
3/16/2015	PARAMS	1503171025Z	DTW	493.55	ft	NA	NA		
3/16/2015	PARAMS	1503171025Z	Conductivity	1006	µS/cm	NA	NA		
3/16/2015	PARAMS	1503171025Z	pH	8.14	NA	NA	NA		
3/16/2015	PARAMS	1503171025Z	Turbidity	1.06	NTU	NA	NA		
3/16/2015	8260C	1503171050Z	2-Butanone (MEK)	ND	ug/L	5.0	0.81		
3/16/2015	8260C	1503171050Z	cis-1,2-Dichloroethene	ND	ug/L	0.50	0.20		
3/16/2015	8260C	1503171050Z	1,1,1,2-Tetrachloroethane	ND	ug/L	0.50	0.20		
3/16/2015	8260C	1503171050Z	1,1,2,2-Tetrachloroethane	ND	ug/L	0.50	0.20		
3/16/2015	8260C	1503171050Z	1,1,2-Trichloro-1,2,2-Trifluoroethane	ND	ug/L	0.50	0.31		
3/16/2015	8260C	1503171050Z	1,1-Dichloroethane (1,1-DCA)	ND	ug/L	0.50	0.20		
3/16/2015	8260C	1503171050Z	2-Propanol	ND	ug/L	40	8.6		
3/16/2015	8260C	1503171050Z	1,2,3-Trichloropropane	ND	ug/L	0.50	0.32		
3/16/2015	8260C	1503171050Z	1,2-Dibromo-3-chloropropane (DBCP)	ND	ug/L	1.0	0.74		
3/16/2015	8260C	1503171050Z	1,2-Dibromoethane	ND	ug/L	0.50	0.24		
3/16/2015	8260C	1503171050Z	1,2-Dichloroethane	ND	ug/L	0.50	0.20		
3/16/2015	8260C	1503171050Z	1,2-Dichloropropane	ND	ug/L	0.50	0.20		
3/16/2015	8260C	1503171050Z	1,4-Dioxane	ND	ug/L	40	18		
3/16/2015	8260C	1503171050Z	2,2-Dichloro-1,1,1-trifluoroethane (CFC 123)	ND	ug/L	0.50	0.32		
3/16/2015	8260C	1503171050Z	1,1-Dichloroethene	ND	ug/L	0.50	0.28		
3/16/2015	8260C	1503171050Z	1,1,2-Trichloroethane	ND	ug/L	0.50	0.23		
3/16/2015	8260C	1503171050Z	Bromoform	ND	ug/L	1.0	0.21		
3/16/2015	8260C	1503171050Z	3-Chloro-1-propene (Allyl Chloride)	ND	ug/L	0.50	0.25		
3/16/2015	8260C	1503171050Z	Acetone	ND	ug/L	5.0	1.3		
3/16/2015	8260C	1503171050Z	Acetonitrile	ND	ug/L	25	3.7		
3/16/2015	8260C	1503171050Z	Acrolein	ND	ug/L	5.0	3.0		
3/16/2015	8260C	1503171050Z	Acrylonitrile	ND	ug/L	2.5	0.78		
3/16/2015	8260C	1503171050Z	Chloroethane	ND	ug/L	0.50	0.22		
3/16/2015	8260C	1503171050Z	Carbon Disulfide	ND	ug/L	0.50	0.20		
3/16/2015	8260C	1503171050Z	4-Methyl-2-pentanone	ND	ug/L	2.0	0.20		
3/16/2015	8260C	1503171050Z	2-Chloro-1,3-butadiene	ND	ug/L	0.50	0.22		
3/16/2015	8260C	1503171050Z	Bromomethane	ND	ug/L	0.50	0.24		
3/16/2015	8260C	1503171050Z	Chlorobenzene	ND	ug/L	0.50	0.20		
3/16/2015	8260C	1503171050Z	Carbon Tetrachloride	ND	ug/L	0.50	0.45		
3/16/2015	8260C	1503171050Z	1,1,1-Trichloroethane (TCA)	ND	ug/L	0.50	0.36		

Analytical Results for Sampling Events at JER-2-508

Event Date	Analysis Method	Sample	Constituent	Result	Units	Quant Limit	Det Limit	Extract Efficiency	QA Flag
3/16/2015	8260C	1503171050Z	Bromodichloromethane	ND	ug/L	0.50	0.32		
3/16/2015	8260C	1503171050Z	Benzene	ND	ug/L	0.50	0.20		
3/16/2015	8260C	1503171050Z	Styrene	ND	ug/L	0.50	0.20		
3/16/2015	8260C	1503171050Z	Cyclohexane	ND	ug/L	1.0	0.25		
3/16/2015	8260C	1503171050Z	Dibromochloromethane	ND	ug/L	0.50	0.20		
3/16/2015	8260C	1503171050Z	Chloromethane	ND	ug/L	0.50	0.20		
3/16/2015	8260C	1503171050Z	Dibromomethane	ND	ug/L	0.50	0.22		
3/16/2015	8260C	1503171050Z	Dichlorodifluoromethane (CFC 12)	ND	ug/L	0.50	0.21		
3/16/2015	8260C	1503171050Z	trans-1,4-Dichloro-2-butene	ND	ug/L	0.52	0.52		
3/16/2015	8260C	1503171050Z	Ethylbenzene	ND	ug/L	0.50	0.20		
3/16/2015	8260C	1503171050Z	Dichloromethane	ND	ug/L	0.50	0.20		
3/16/2015	8260C	1503171050Z	Methacrylonitrile	ND	ug/L	1.0	0.50		
3/16/2015	8260C	1503171050Z	Methyl Methacrylate	ND	ug/L	0.50	0.39		
3/16/2015	8260C	1503171050Z	Methyl tert-Butyl Ether	ND	ug/L	0.50	0.20		
3/16/2015	8260C	1503171050Z	1,2-Dichloro-1,1,2-trifluoroethane (CFC 123a)	ND	ug/L	0.50	0.20		
3/16/2015	8260C	1503171050Z	Methylcyclohexane	ND	ug/L	1.0	0.27		
3/16/2015	8260C	1503171050Z	2-Methyl-1-propanol (Isobutyl Alcohol)	ND	ug/L	100	8.1		
3/16/2015	8260C	1503171050Z	Dichlorofluoromethane (CFC 21)	ND	ug/L	0.50	0.20		
3/16/2015	8260C	1503171050Z	Trichlorofluoromethane (CFC 11)	ND	ug/L	0.50	0.20		
3/16/2015	8260C	1503171050Z	Tetrachloroethene (PCE)	ND	ug/L	0.50	0.20		
3/16/2015	8260C	1503171050Z	Iodomethane	ND	ug/L	5.0	0.27		
3/16/2015	8260C	1503171050Z	Ethyl Methacrylate	ND	ug/L	0.50	0.20		
3/16/2015	8260C	1503171050Z	Tetrahydrofuran (THF)	ND	ug/L	5.0	0.66		
3/16/2015	8260C	1503171050Z	Trichloroethene (TCE)	ND	ug/L	0.50	0.20		
3/16/2015	8260C	1503171050Z	Propionitrile	ND	ug/L	2.5	1.7		
3/16/2015	8260C	1503171050Z	Vinyl Chloride	ND	ug/L	0.50	0.22		
3/16/2015	8260C	1503171050Z	Chloroform	ND	ug/L	0.50	0.20		
3/16/2015	8260C	1503171050Z	Vinyl Acetate	ND	ug/L	1.0	0.78		
3/16/2015	8260C	1503171050Z	Toluene	ND	ug/L	0.50	0.20		
3/16/2015	8260C	1503171050Z	2-Hexanone	ND	ug/L	5.0	0.73		
3/16/2015	8260C	1503171050Z	trans-1,2-Dichloroethene	ND	ug/L	0.50	0.20		
3/16/2015	8260C	1503171050Z	trans-1,3-Dichloropropene	ND	ug/L	0.50	0.20		
3/16/2015	8260C	1503171050Z	o-Xylene	ND	ug/L	0.50	0.20		
3/16/2015	8260C	1503171050Z	m,p-Xylenes	ND	ug/L	1.0	0.26		
3/16/2015	8260C	1503171050Z	cis-1,3-Dichloropropene	ND	ug/L	0.50	0.20		
3/16/2015	8260C	1503171051Z	2-Propanol	ND	ug/L	50	8.6		
3/16/2015	8260C	1503171051Z	1,1-Dichloroethene	ND	ug/L	1.0	0.57		

Analytical Results for Sampling Events at JER-2-508

Event Date	Analysis Method	Sample	Constituent	Result	Units	Quant Limit	Det Limit	Extract Efficiency	QA Flag
3/16/2015	8260C	1503171051Z	Acetonitrile	ND	ug/L	25	4.7		
3/16/2015	8260C	1503171051Z	Acetone	ND	ug/L	10	1.3		
3/16/2015	8260C	1503171051Z	4-Methyl-2-pentanone	ND	ug/L	5.0	0.67		
3/16/2015	8260C	1503171051Z	3-Chloro-1-propene (Allyl Chloride)	ND	ug/L	2.0	0.26		
3/16/2015	8260C	1503171051Z	Acrolein	ND	ug/L	10	3.0		
3/16/2015	8260C	1503171051Z	2-Methyl-1-propanol (Isobutyl Alcohol)	ND	ug/L	100	11		
3/16/2015	8260C	1503171051Z	2-Hexanone	ND	ug/L	5.0	1.7		
3/16/2015	8260C	1503171051Z	2-Chloro-1,3-butadiene	ND	ug/L	1.0	0.27		
3/16/2015	8260C	1503171051Z	Benzene	ND	ug/L	1.0	0.20		
3/16/2015	8260C	1503171051Z	2,2-Dichloro-1,1,1-trifluoroethane (CFC 123)	ND	ug/L	1.0	0.32		
3/16/2015	8260C	1503171051Z	Styrene	ND	ug/L	1.0	0.20		
3/16/2015	8260C	1503171051Z	1,2-Dibromo-3-chloropropane (DBCP)	ND	ug/L	2.0	0.74		
3/16/2015	8260C	1503171051Z	1,2-Dichloroethane	ND	ug/L	1.0	0.36		
3/16/2015	8260C	1503171051Z	1,2-Dibromoethane	ND	ug/L	1.0	0.24		
3/16/2015	8260C	1503171051Z	Dichlorofluoromethane (CFC 21)	ND	ug/L	1.0	0.24		
3/16/2015	8260C	1503171051Z	Toluene	ND	ug/L	1.0	0.20		
3/16/2015	8260C	1503171051Z	1,1-Dichloroethane (1,1-DCA)	ND	ug/L	1.0	0.20		
3/16/2015	8260C	1503171051Z	Trichlorofluoromethane (CFC 11)	ND	ug/L	1.0	0.20		
3/16/2015	8260C	1503171051Z	Vinyl Acetate	ND	ug/L	5.0	1.1		
3/16/2015	8260C	1503171051Z	Tetrachloroethene (PCE)	ND	ug/L	1.0	0.30		
3/16/2015	8260C	1503171051Z	Trichloroethene (TCE)	ND	ug/L	1.0	0.22		
3/16/2015	8260C	1503171051Z	trans-1,3-Dichloropropene	ND	ug/L	1.0	0.20		
3/16/2015	8260C	1503171051Z	Acrylonitrile	ND	ug/L	5.0	1.4		
3/16/2015	8260C	1503171051Z	o-Xylene	ND	ug/L	1.0	0.20		
3/16/2015	8260C	1503171051Z	cis-1,3-Dichloropropene	ND	ug/L	1.0	0.24		
3/16/2015	8260C	1503171051Z	cis-1,2-Dichloroethene	ND	ug/L	1.0	0.30		
3/16/2015	8260C	1503171051Z	Vinyl Chloride	ND	ug/L	1.0	0.32		
3/16/2015	8260C	1503171051Z	trans-1,4-Dichloro-2-butene	ND	ug/L	1.0	0.70		
3/16/2015	8260C	1503171051Z	1,4-Dioxane	ND	ug/L	100	20		
3/16/2015	8260C	1503171051Z	1,2-Dichloro-1,1,2-trifluoroethane (CFC 123a)	ND	ug/L	1.0	0.21		
3/16/2015	8260C	1503171051Z	Chloroethane	ND	ug/L	2.0	0.24		
3/16/2015	8260C	1503171051Z	Ethyl Methacrylate	ND	ug/L	2.0	0.44		
3/16/2015	8260C	1503171051Z	Bromoform	ND	ug/L	1.0	0.42		
3/16/2015	8260C	1503171051Z	Methacrylonitrile	ND	ug/L	5.0	0.50		
3/16/2015	8260C	1503171051Z	Bromomethane	ND	ug/L	2.0	0.29		
3/16/2015	8260C	1503171051Z	Dibromomethane	ND	ug/L	1.0	0.32		
3/16/2015	8260C	1503171051Z	Dichlorodifluoromethane (CFC 12)	ND	ug/L	1.0	0.46		
3/16/2015	8260C	1503171051Z	Chlorobenzene	ND	ug/L	1.0	0.29		

Analytical Results for Sampling Events at JER-2-508

Event Date	Analysis Method	Sample	Constituent	Result	Units	Quant Limit	Det Limit	Extract Efficiency	QA Flag
3/16/2015	8260C	1503171051Z	Dichloromethane	ND	ug/L	1.0	0.60		
3/16/2015	8260C	1503171051Z	Dibromochloromethane	ND	ug/L	1.0	0.31		
3/16/2015	8260C	1503171051Z	Chloroform	ND	ug/L	1.0	0.25		
3/16/2015	8260C	1503171051Z	Chloromethane	ND	ug/L	2.0	0.21		
3/16/2015	8260C	1503171051Z	Cyclohexane	ND	ug/L	10	0.25		
3/16/2015	8260C	1503171051Z	Tetrahydrofuran (THF)	ND	ug/L	5.0	0.96		
3/16/2015	8260C	1503171051Z	trans-1,2-Dichloroethene	ND	ug/L	1.0	0.33		
3/16/2015	8260C	1503171051Z	Carbon Tetrachloride	ND	ug/L	1.0	0.45		
3/16/2015	8260C	1503171051Z	1,2,3-Trichloropropane	ND	ug/L	1.0	0.70		
3/16/2015	8260C	1503171051Z	1,1,2-Trichloroethane	ND	ug/L	1.0	0.34		
3/16/2015	8260C	1503171051Z	1,1,2,2-Tetrachloroethane	ND	ug/L	1.0	0.25		
3/16/2015	8260C	1503171051Z	1,1,1-Trichloroethane (TCA)	ND	ug/L	1.0	0.36		
3/16/2015	8260C	1503171051Z	1,1,1,2-Tetrachloroethane	ND	ug/L	1.0	0.22		
3/16/2015	8260C	1503171051Z	1,2-Dichloropropane	ND	ug/L	1.0	0.20		
3/16/2015	8260C	1503171051Z	Carbon Disulfide	ND	ug/L	1.0	0.22		
3/16/2015	8260C	1503171051Z	Ethylbenzene	ND	ug/L	1.0	0.20		
3/16/2015	8260C	1503171051Z	1,1,2-Trichloro-1,2,2-Trifluoroethane	ND	ug/L	1.0	0.31		
3/16/2015	8260C	1503171051Z	Bromodichloromethane	ND	ug/L	1.0	0.32		
3/16/2015	8260C	1503171051Z	Propionitrile	ND	ug/L	5.0	3.1		
3/16/2015	8260C	1503171051Z	Methylcyclohexane	ND	ug/L	10	0.27		
3/16/2015	8260C	1503171051Z	Methyl tert-Butyl Ether	ND	ug/L	10	0.29		
3/16/2015	8260C	1503171051Z	Methyl Methacrylate	ND	ug/L	2.0	0.62		
3/16/2015	8260C	1503171051Z	Iodomethane	ND	ug/L	5.0	0.98		
3/16/2015	8260C	1503171051Z	2-Butanone (MEK)	ND	ug/L	5.0	0.81		
3/16/2015	8260C	1503171051Z	m,p-Xylenes	ND	ug/L	2.0	0.33		
3/16/2015	TAP 01-04	1503171052Z	Bromacil	ND	ug/L	0.0095	0.0048	90	
3/16/2015	TAP 01-04	1503171052Z	N-Nitrodimethylamine	ND	ug/L	0.0095	0.0048	85	
3/16/2015	TAP 01-04	1503171052Z	N-Nitrosodimethylamine	ND	ug/L	0.0095	0.0048	86	
3/16/2015	TAP 01-04	1503171340Z	N-Nitrodimethylamine	ND	ng/L	0.00094	0.00047		
3/16/2015	TAP 01-04	1503171340Z	N-Nitrosodimethylamine	0.52	ng/L	0.00094	0.00047		
3/16/2015	6010C	1503171341Z	Aluminum, Total	ND	mg/L	0.10	0.03		
3/16/2015	6020A	1503171341Z	Antimony, Total	ND	mg/L	0.0010	0.0004		
3/16/2015	6010C	1503171341Z	Beryllium, Total	0.0003	mg/L	0.0030	0.0002		J RB
3/16/2015	6010C	1503171341Z	Calcium, Total	87	mg/L	1.0	0.2		
3/16/2015	6010C	1503171341Z	Chromium, Total	ND	mg/L	0.010	0.0009		
3/16/2015	6010C	1503171341Z	Cobalt, Total	ND	mg/L	0.050	0.002		

Analytical Results for Sampling Events at JER-2-508

Event Date	Analysis Method	Sample	Constituent	Result	Units	Quant Limit	Det Limit	Extract Efficiency	QA Flag
3/16/2015	6010C	1503171341Z	Copper, Total	0.005	mg/L	0.020	0.004		J
3/16/2015	6010C	1503171341Z	Boron, Total	0.21	mg/L	0.20	0.03		J
3/16/2015	6020A	1503171341Z	Arsenic, Total	0.0005	mg/L	0.0010	0.0004		J
3/16/2015	6010C	1503171341Z	Silver, Total	ND	mg/L	0.010	0.0009		
3/16/2015	6010C	1503171341Z	Magnesium, Total	56.1	mg/L	1.0	0.02		
3/16/2015	6020A	1503171341Z	Thallium, Total	0.0002	mg/L	0.0010	0.00006		J
3/16/2015	6010C	1503171341Z	Iron, Total	ND	mg/L	0.10	0.02		
3/16/2015	6010C	1503171341Z	Manganese, Total	ND	mg/L	0.010	0.002		
3/16/2015	6010C	1503171341Z	Cadmium, Total	ND	mg/L	0.0050	0.0005		
3/16/2015	6010C	1503171341Z	Nickel, Total	ND	mg/L	0.040	0.002		
3/16/2015	6010C	1503171341Z	Barium, Total	0.06	mg/L	0.020	0.004		
3/16/2015	6010C	1503171341Z	Selenium, Total	0.004	mg/L	0.010	0.003		J
3/16/2015	6010C	1503171341Z	Strontium, Total	2.21	mg/L	0.10	0.002		
3/16/2015	6010C	1503171341Z	Tin, Total	ND	mg/L	0.50	0.05		
3/16/2015	6010C	1503171341Z	Vanadium, Total	0.003	mg/L	0.050	0.0007		J
3/16/2015	6010C	1503171341Z	Molybdenum, Total	0.011	mg/L	0.025	0.002		J
3/16/2015	6010C	1503171341Z	Potassium, Total	3.8	mg/L	2.0	0.2		
3/16/2015	7470A	1503171341Z	Mercury, Total	ND	mg/L	0.00020	0.00003		
3/16/2015	6010C	1503171341Z	Zinc, Total	0.03	mg/L	0.020	0.005		
3/16/2015	6010C	1503171341Z	Lead, Total	ND	mg/L	0.050	0.002		
3/16/2015	6010C	1503171341Z	Sodium, Total	52.1	mg/L	1.0	0.09		
3/16/2015	SW9060	1503171440Z	Total Organic Carbon	ND	mg/l	1	0.1611		
3/16/2015	300.0	1503180830Z	Chloride	43.2	mg/L	2.0	0.3		
3/16/2015	SM 2320 B	1503180830Z	Alkalinity, Total as CaCO3	175	mg/L	2.0	0.3		
3/16/2015	300.0	1503180830Z	Fluoride, undistilled	0.93	mg/L	0.10	0.04		
3/16/2015	300.0	1503180830Z	Sulfate	306	mg/L	8.0	7.6		
3/16/2015	SM 2540 C	1503180831Z	Total Dissolved Solids (TDS)	704	mg/L	10	5		
3/16/2015	6850	1503180832Z	Perchlorate	0.37	ug/L	0.20	0.026		
3/16/2015	353.2	1503180910Z	Nitrate+Nitrite as Nitrogen	0.738	mg/L	0.050	0.002		
3/16/2015	PARAMS	1503180920Z	Conductivity	1034	µS/cm	NA	NA		
3/16/2015	PARAMS	1503180920Z	Temperature	21.0	ºC	NA	NA		
3/16/2015	PARAMS	1503180920Z	Atmospheric Pressure	12.62	psia	NA	NA		
3/16/2015	PARAMS	1503180920Z	pH	7.80	NA	NA	NA		
3/16/2015	PARAMS	1503180920Z	DTW	493.49	ft	NA	NA		
3/16/2015	PARAMS	1503180920Z	Turbidity	0.95	NTU	NA	NA		

Analytical Results for Sampling Events at JER-2-508

Event Date	Analysis Method	Sample	Constituent	Result	Units	Quant Limit	Det Limit	Extract Efficiency	QA Flag
4/28/2015	PARAMS	1504280920	DTW	488.70	ft	NA	NA		
4/28/2015	PARAMS	1504280920	pH	7.89	NA	NA	NA		
4/28/2015	PARAMS	1504280920	Turbidity	0.73	NTU	NA	NA		
4/28/2015	PARAMS	1504280920	Conductivity	965	µS/cm	NA	NA		
4/28/2015	PARAMS	1504280920	Temperature	22.4	ºC	NA	NA		
4/28/2015	8260C	1504280921	1,2,3-Trichloropropane	ND	ug/L	1.0	0.70		
4/28/2015	8260C	1504280921	2-Butanone (MEK)	ND	ug/L	5.0	0.81		
4/28/2015	8260C	1504280921	2,2-Dichloro-1,1,1-trifluoroethane (CFC 123)	ND	ug/L	1.0	0.32		
4/28/2015	8260C	1504280921	1,2-Dichloropropane	ND	ug/L	1.0	0.20		
4/28/2015	8260C	1504280921	Trichloroethene (TCE)	0.98	ug/L	1.0	0.22		J TB
4/28/2015	8260C	1504280921	1,2-Dichloroethane	ND	ug/L	1.0	0.36		
4/28/2015	8260C	1504280921	1,1,2,2-Tetrachloroethane	ND	ug/L	1.0	0.25		
4/28/2015	8260C	1504280921	1,2-Dibromo-3-chloropropane (DBCP)	ND	ug/L	2.0	0.74		
4/28/2015	8260C	1504280921	1,1-Dichloroethene	ND	ug/L	1.0	0.57		
4/28/2015	8260C	1504280921	1,1-Dichloroethane (1,1-DCA)	ND	ug/L	1.0	0.20		
4/28/2015	8260C	1504280921	Chloromethane	ND	ug/L	2.0	0.21		
4/28/2015	8260C	1504280921	1,4-Dioxane	ND	ug/L	100	20		
4/28/2015	8260C	1504280921	m,p-Xylenes	ND	ug/L	2.0	0.33		
4/28/2015	8260C	1504280921	Toluene	ND	ug/L	1.0	0.20		
4/28/2015	8260C	1504280921	Trichlorofluoromethane (CFC 11)	ND	ug/L	1.0	0.20		
4/28/2015	8260C	1504280921	Vinyl Acetate	ND	ug/L	5.0	1.1		
4/28/2015	8260C	1504280921	Vinyl Chloride	ND	ug/L	1.0	0.32		
4/28/2015	8260C	1504280921	Tetrachloroethene (PCE)	ND	ug/L	1.0	0.30		
4/28/2015	8260C	1504280921	cis-1,3-Dichloropropene	ND	ug/L	1.0	0.24		
4/28/2015	8260C	1504280921	Methylcyclohexane	ND	ug/L	10	0.27		
4/28/2015	8260C	1504280921	trans-1,3-Dichloropropene	ND	ug/L	1.0	0.20		
4/28/2015	8260C	1504280921	1,2-Dichloro-1,1,2-trifluoroethane (CFC 123a)	ND	ug/L	1.0	0.21		
4/28/2015	8260C	1504280921	cis-1,2-Dichloroethene	ND	ug/L	1.0	0.30		
4/28/2015	8260C	1504280921	Ethylbenzene	ND	ug/L	1.0	0.20		
4/28/2015	8260C	1504280921	Chloroform	ND	ug/L	1.0	0.25		
4/28/2015	8260C	1504280921	Acetonitrile	ND	ug/L	25	4.7		
4/28/2015	8260C	1504280921	Tetrahydrofuran (THF)	ND	ug/L	5.0	0.96		
4/28/2015	8260C	1504280921	Dichlorodifluoromethane (CFC 12)	ND	ug/L	1.0	0.46		
4/28/2015	8260C	1504280921	Methyl tert-Butyl Ether	ND	ug/L	10	0.29		
4/28/2015	8260C	1504280921	2-Propanol	ND	ug/L	50	8.6		
4/28/2015	8260C	1504280921	2-Methyl-1-propanol (Isobutyl Alcohol)	ND	ug/L	100	11		
4/28/2015	8260C	1504280921	1,1,2-Trichloro-1,2,2-Trifluoroethane	0.51	ug/L	1.0	0.31		J TB

Analytical Results for Sampling Events at JER-2-508

Event Date	Analysis Method	Sample	Constituent	Result	Units	Quant Limit	Det Limit	Extract Efficiency	QA Flag
4/28/2015	8260C	1504280921	o-Xylene	ND	ug/L	1.0	0.20		
4/28/2015	8260C	1504280921	Dichloromethane	ND	ug/L	1.0	0.60		
4/28/2015	8260C	1504280921	Propionitrile	ND	ug/L	5.0	3.1		
4/28/2015	8260C	1504280921	4-Methyl-2-pentanone	ND	ug/L	5.0	0.67		
4/28/2015	8260C	1504280921	Dibromomethane	ND	ug/L	1.0	0.32		
4/28/2015	8260C	1504280921	1,1,1-Trichloroethane (TCA)	ND	ug/L	1.0	0.36		
4/28/2015	8260C	1504280921	Dichlorofluoromethane (CFC 21)	ND	ug/L	1.0	0.24		
4/28/2015	8260C	1504280921	Styrene	ND	ug/L	1.0	0.20		
4/28/2015	8260C	1504280921	Ethyl Methacrylate	ND	ug/L	2.0	0.44		
4/28/2015	8260C	1504280921	1,1,1,2-Tetrachloroethane	ND	ug/L	1.0	0.22		
4/28/2015	8260C	1504280921	Iodomethane	ND	ug/L	5.0	0.98		
4/28/2015	8260C	1504280921	Methacrylonitrile	ND	ug/L	5.0	0.50		
4/28/2015	8260C	1504280921	Methyl Methacrylate	ND	ug/L	2.0	0.62		
4/28/2015	8260C	1504280921	trans-1,4-Dichloro-2-butene	ND	ug/L	1.0	0.70		
4/28/2015	8260C	1504280921	Bromoform	ND	ug/L	1.0	0.42		
4/28/2015	8260C	1504280921	1,1,2-Trichloroethane	ND	ug/L	1.0	0.34		
4/28/2015	8260C	1504280921	2-Chloro-1,3-butadiene	ND	ug/L	1.0	0.27		
4/28/2015	8260C	1504280921	1,2-Dibromoethane	ND	ug/L	1.0	0.24		
4/28/2015	8260C	1504280921	Chlorobenzene	ND	ug/L	1.0	0.29		
4/28/2015	8260C	1504280921	Acrolein	ND	ug/L	10	3.0		
4/28/2015	8260C	1504280921	Acrylonitrile	ND	ug/L	5.0	1.4		
4/28/2015	8260C	1504280921	Benzene	ND	ug/L	1.0	0.20		
4/28/2015	8260C	1504280921	3-Chloro-1-propene (Allyl Chloride)	ND	ug/L	2.0	0.26		
4/28/2015	8260C	1504280921	Cyclohexane	ND	ug/L	10	0.25		
4/28/2015	8260C	1504280921	Carbon Disulfide	ND	ug/L	1.0	0.22		
4/28/2015	8260C	1504280921	Dibromochloromethane	ND	ug/L	1.0	0.31		
4/28/2015	8260C	1504280921	Bromomethane	ND	ug/L	2.0	0.29		
4/28/2015	8260C	1504280921	Acetone	ND	ug/L	10	1.3		
4/28/2015	8260C	1504280921	Carbon Tetrachloride	ND	ug/L	1.0	0.45		
4/28/2015	8260C	1504280921	2-Hexanone	ND	ug/L	5.0	1.7		
4/28/2015	8260C	1504280921	trans-1,2-Dichloroethene	ND	ug/L	1.0	0.33		
4/28/2015	8260C	1504280921	Chloroethane	ND	ug/L	2.0	0.24		
4/28/2015	8260C	1504280921	Bromodichloromethane	ND	ug/L	1.0	0.32		
4/28/2015	TAP 01-04	1504280923	N-Nitrodimethylamine	ND	ng/L	0.48	0.19		
4/28/2015	TAP 01-04	1504280923	N-Nitrosodimethylamine	ND	ng/L	0.48	0.31		
4/28/2015	SW9060	1504280925	Total Organic Carbon	0.37	mg/l	1	0.1611		

Analytical Results for Sampling Events at JER-2-508

Event Date	Analysis Method	Sample	Constituent	Result	Units	Quant Limit	Det Limit	Extract Efficiency	QA Flag
4/28/2015	SM 2540 C	1504280926	Total Dissolved Solids (TDS)	721	mg/L	10	5		
4/28/2015	6010C	1504280927	Cadmium, Total	0.0004	mg/L	0.0050	0.0002		J
4/28/2015	6020A	1504280927	Antimony, Total	0.0003	mg/L	0.0010	0.00003		J RB
4/28/2015	6010C	1504280927	Manganese, Total	0.01	mg/L	0.010	0.002		J
4/28/2015	6020A	1504280927	Arsenic, Total	0.0005	mg/L	0.0010	0.0004		J
4/28/2015	6010C	1504280927	Beryllium, Total	ND	mg/L	0.0030	0.0002		
4/28/2015	6010C	1504280927	Boron, Total	0.09	mg/L	0.20	0.03		J
4/28/2015	6010C	1504280927	Strontium, Total	2.23	mg/L	0.10	0.0003		
4/28/2015	6010C	1504280927	Barium, Total	0.06	mg/L	0.020	0.0008		
4/28/2015	6010C	1504280927	Calcium, Total	84.8	mg/L	1.0	0.04		
4/28/2015	6010C	1504280927	Selenium, Total	ND	mg/L	0.010	0.005		
4/28/2015	6010C	1504280927	Lead, Total	ND	mg/L	0.050	0.002		
4/28/2015	6010C	1504280927	Zinc, Total	0.048	mg/L	0.020	0.007		
4/28/2015	6010C	1504280927	Vanadium, Total	0.004	mg/L	0.050	0.0005		J
4/28/2015	6020A	1504280927	Thallium, Total	0.0002	mg/L	0.0010	0.00003		J
4/28/2015	6010C	1504280927	Sodium, Total	52.6	mg/L	1.0	0.04		
4/28/2015	6010C	1504280927	Silver, Total	ND	mg/L	0.010	0.0006		
4/28/2015	6010C	1504280927	Potassium, Total	4	mg/L	2.0	0.05		
4/28/2015	6010C	1504280927	Molybdenum, Total	0.011	mg/L	0.025	0.0007		J
4/28/2015	7470A	1504280927	Mercury, Total	ND	mg/L	0.00020	0.00003		
4/28/2015	6010C	1504280927	Cobalt, Total	ND	mg/L	0.050	0.0006		
4/28/2015	6010C	1504280927	Tin, Total	ND	mg/L	0.50	0.02		
4/28/2015	6010C	1504280927	Chromium, Total	ND	mg/L	0.010	0.0004		
4/28/2015	6010C	1504280927	Nickel, Total	ND	mg/L	0.040	0.0010		
4/28/2015	6010C	1504280927	Copper, Total	ND	mg/L	0.020	0.003		
4/28/2015	6010C	1504280927	Iron, Total	ND	mg/L	0.10	0.010		
4/28/2015	6010C	1504280927	Aluminum, Total	ND	mg/L	0.10	0.008		
4/28/2015	6010C	1504280927	Magnesium, Total	55.5	mg/L	1.0	0.010		
4/28/2015	353.2	1504280928	Nitrate+Nitrite as Nitrogen	0.664	mg/L	0.050	0.002		
4/28/2015	PARAMS	1504280950	Turbidity	0.17	NTU	NA	NA		
4/28/2015	PARAMS	1504280950	Conductivity	969	µS/cm	NA	NA		
4/28/2015	PARAMS	1504280950	Temperature	23.81	ºC	NA	NA		
4/28/2015	PARAMS	1504280950	pH	7.70	NA	NA	NA		
4/28/2015	8260C	1504280951	Iodomethane	ND	ug/L	5.0	0.98		
4/28/2015	8260C	1504280951	1,1,2,2-Tetrachloroethane	ND	ug/L	1.0	0.25		
4/28/2015	8260C	1504280951	1,1,1,2-Tetrachloroethane	ND	ug/L	1.0	0.22		

Analytical Results for Sampling Events at JER-2-508

Event Date	Analysis Method	Sample	Constituent	Result	Units	Quant Limit	Det Limit	Extract Efficiency	QA Flag
4/28/2015	8260C	1504280951	2-Propanol	ND	ug/L	50	8.6		
4/28/2015	8260C	1504280951	2-Methyl-1-propanol (Isobutyl Alcohol)	ND	ug/L	100	11		
4/28/2015	8260C	1504280951	1,1,2-Trichloroethane	ND	ug/L	1.0	0.34		
4/28/2015	8260C	1504280951	Trichlorofluoromethane (CFC 11)	ND	ug/L	1.0	0.20		
4/28/2015	8260C	1504280951	Methyl Methacrylate	ND	ug/L	2.0	0.62		
4/28/2015	8260C	1504280951	Ethylbenzene	ND	ug/L	1.0	0.20		
4/28/2015	8260C	1504280951	1,1,2-Trichloro-1,2,2-Trifluoroethane	ND	ug/L	1.0	0.31		
4/28/2015	8260C	1504280951	Methacrylonitrile	ND	ug/L	5.0	0.50		
4/28/2015	8260C	1504280951	1,2-Dibromoethane	ND	ug/L	1.0	0.24		
4/28/2015	8260C	1504280951	2-Chloro-1,3-butadiene	ND	ug/L	1.0	0.27		
4/28/2015	8260C	1504280951	1,1-Dichloroethane (1,1-DCA)	ND	ug/L	1.0	0.20		
4/28/2015	8260C	1504280951	1,1-Dichloroethene	ND	ug/L	1.0	0.57		
4/28/2015	8260C	1504280951	1,2,3-Trichloropropane	ND	ug/L	1.0	0.70		
4/28/2015	8260C	1504280951	1,2-Dibromo-3-chloropropane (DBCP)	ND	ug/L	2.0	0.74		
4/28/2015	8260C	1504280951	1,2-Dichloroethane	ND	ug/L	1.0	0.36		
4/28/2015	8260C	1504280951	4-Methyl-2-pentanone	ND	ug/L	5.0	0.67		
4/28/2015	8260C	1504280951	1,2-Dichloropropane	ND	ug/L	1.0	0.20		
4/28/2015	8260C	1504280951	Methyl tert-Butyl Ether	ND	ug/L	10	0.29		
4/28/2015	8260C	1504280951	1,4-Dioxane	ND	ug/L	100	20		
4/28/2015	8260C	1504280951	2,2-Dichloro-1,1,1-trifluoroethane (CFC 123)	ND	ug/L	1.0	0.32		
4/28/2015	8260C	1504280951	2-Butanone (MEK)	ND	ug/L	5.0	0.81		
4/28/2015	8260C	1504280951	1,1,1-Trichloroethane (TCA)	ND	ug/L	1.0	0.36		
4/28/2015	8260C	1504280951	2-Hexanone	ND	ug/L	5.0	1.7		
4/28/2015	8260C	1504280951	Chloroform	ND	ug/L	1.0	0.25		
4/28/2015	8260C	1504280951	Acrolein	ND	ug/L	10	3.0		
4/28/2015	8260C	1504280951	Acrylonitrile	ND	ug/L	5.0	1.4		
4/28/2015	8260C	1504280951	Benzene	ND	ug/L	1.0	0.20		
4/28/2015	8260C	1504280951	Bromodichloromethane	ND	ug/L	1.0	0.32		
4/28/2015	8260C	1504280951	Bromoform	ND	ug/L	1.0	0.42		
4/28/2015	8260C	1504280951	Bromomethane	ND	ug/L	2.0	0.29		
4/28/2015	8260C	1504280951	Carbon Disulfide	ND	ug/L	1.0	0.22		
4/28/2015	8260C	1504280951	Acetonitrile	ND	ug/L	25	4.7		
4/28/2015	8260C	1504280951	Chlorobenzene	ND	ug/L	1.0	0.29		
4/28/2015	8260C	1504280951	3-Chloro-1-propene (Allyl Chloride)	ND	ug/L	2.0	0.26		
4/28/2015	8260C	1504280951	Cyclohexane	ND	ug/L	10	0.25		
4/28/2015	8260C	1504280951	Dibromochloromethane	ND	ug/L	1.0	0.31		
4/28/2015	8260C	1504280951	Dibromomethane	ND	ug/L	1.0	0.32		
4/28/2015	8260C	1504280951	Dichlorodifluoromethane (CFC 12)	ND	ug/L	1.0	0.46		

Analytical Results for Sampling Events at JER-2-508

Event Date	Analysis Method	Sample	Constituent	Result	Units	Quant Limit	Det Limit	Extract Efficiency	QA Flag
4/28/2015	8260C	1504280951	Carbon Tetrachloride	ND	ug/L	1.0	0.45		
4/28/2015	8260C	1504280951	Methylcyclohexane	ND	ug/L	10	0.27		
4/28/2015	8260C	1504280951	Toluene	ND	ug/L	1.0	0.20		
4/28/2015	8260C	1504280951	Ethyl Methacrylate	ND	ug/L	2.0	0.44		
4/28/2015	8260C	1504280951	Tetrahydrofuran (THF)	ND	ug/L	5.0	0.96		
4/28/2015	8260C	1504280951	Propionitrile	ND	ug/L	5.0	3.1		
4/28/2015	8260C	1504280951	Styrene	ND	ug/L	1.0	0.20		
4/28/2015	8260C	1504280951	Chloromethane	ND	ug/L	2.0	0.21		
4/28/2015	8260C	1504280951	Acetone	ND	ug/L	10	1.3		
4/28/2015	8260C	1504280951	Tetrachloroethene (PCE)	ND	ug/L	1.0	0.30		
4/28/2015	8260C	1504280951	Dichloromethane	ND	ug/L	1.0	0.60		
4/28/2015	8260C	1504280951	Trichloroethene (TCE)	0.51	ug/L	1.0	0.22		J
4/28/2015	8260C	1504280951	Dichlorofluoromethane (CFC 21)	ND	ug/L	1.0	0.24		
4/28/2015	8260C	1504280951	Vinyl Acetate	ND	ug/L	5.0	1.1		
4/28/2015	8260C	1504280951	Vinyl Chloride	ND	ug/L	1.0	0.32		
4/28/2015	8260C	1504280951	cis-1,2-Dichloroethene	ND	ug/L	1.0	0.30		
4/28/2015	8260C	1504280951	cis-1,3-Dichloropropene	ND	ug/L	1.0	0.24		
4/28/2015	8260C	1504280951	m,p-Xylenes	ND	ug/L	2.0	0.33		
4/28/2015	8260C	1504280951	o-Xylene	ND	ug/L	1.0	0.20		
4/28/2015	8260C	1504280951	trans-1,4-Dichloro-2-butene	ND	ug/L	1.0	0.70		
4/28/2015	8260C	1504280951	trans-1,3-Dichloropropene	ND	ug/L	1.0	0.20		
4/28/2015	8260C	1504280951	trans-1,2-Dichloroethene	ND	ug/L	1.0	0.33		
4/28/2015	8260C	1504280951	Chloroethane	ND	ug/L	2.0	0.24		
4/28/2015	8260C	1504280951	1,2-Dichloro-1,1,2-trifluoroethane (CFC 123a)	ND	ug/L	1.0	0.21		
4/28/2015	TAP 01-04	1504280952	N-Nitrodimethylamine	ND	ng/L	0.48	0.19		
4/28/2015	TAP 01-04	1504280952	N-Nitrosodimethylamine	ND	ng/L	0.48	0.31		
4/28/2015	SW9060	1504280953	Total Organic Carbon	0.22	mg/l	1	0.1611		
4/28/2015	SM 2540 C	1504280954	Total Dissolved Solids (TDS)	716	mg/L	10	5		
4/28/2015	6010C	1504280955	Boron, Total	0.08	mg/L	0.20	0.03		J
4/28/2015	6010C	1504280955	Strontium, Total	2.24	mg/L	0.10	0.0003		
4/28/2015	6010C	1504280955	Vanadium, Total	0.004	mg/L	0.050	0.0005		J
4/28/2015	6010C	1504280955	Zinc, Total	0.022	mg/L	0.020	0.007		
4/28/2015	7470A	1504280955	Mercury, Total	ND	mg/L	0.00020	0.00003		
4/28/2015	6020A	1504280955	Arsenic, Total	0.0004	mg/L	0.0010	0.0004		J
4/28/2015	6020A	1504280955	Antimony, Total	0.0003	mg/L	0.0010	0.00003		J RB
4/28/2015	6010C	1504280955	Beryllium, Total	ND	mg/L	0.0030	0.0002		

Analytical Results for Sampling Events at JER-2-508

Event Date	Analysis Method	Sample	Constituent	Result	Units	Quant Limit	Det Limit	Extract Efficiency	QA Flag
4/28/2015	6010C	1504280955	Aluminum, Total	ND	mg/L	0.10	0.008		
4/28/2015	6020A	1504280955	Thallium, Total	0.0001	mg/L	0.0010	0.00003		J
4/28/2015	6010C	1504280955	Tin, Total	ND	mg/L	0.50	0.02		
4/28/2015	6010C	1504280955	Cadmium, Total	ND	mg/L	0.0050	0.0002		
4/28/2015	6010C	1504280955	Barium, Total	0.057	mg/L	0.020	0.0008		
4/28/2015	6010C	1504280955	Copper, Total	ND	mg/L	0.020	0.003		
4/28/2015	6010C	1504280955	Nickel, Total	ND	mg/L	0.040	0.0010		
4/28/2015	6010C	1504280955	Molybdenum, Total	0.011	mg/L	0.025	0.0007		J
4/28/2015	6010C	1504280955	Selenium, Total	ND	mg/L	0.010	0.005		
4/28/2015	6010C	1504280955	Silver, Total	ND	mg/L	0.010	0.0006		
4/28/2015	6010C	1504280955	Potassium, Total	3.8	mg/L	2.0	0.05		
4/28/2015	6010C	1504280955	Cobalt, Total	ND	mg/L	0.050	0.0006		
4/28/2015	6010C	1504280955	Chromium, Total	ND	mg/L	0.010	0.0004		
4/28/2015	6010C	1504280955	Manganese, Total	0.006	mg/L	0.010	0.002		J
4/28/2015	6010C	1504280955	Calcium, Total	85.6	mg/L	1.0	0.04		
4/28/2015	6010C	1504280955	Iron, Total	ND	mg/L	0.10	0.010		
4/28/2015	6010C	1504280955	Lead, Total	ND	mg/L	0.050	0.002		
4/28/2015	6010C	1504280955	Sodium, Total	49.8	mg/L	1.0	0.04		
4/28/2015	6010C	1504280955	Magnesium, Total	56.2	mg/L	1.0	0.010		
4/28/2015	353.2	1504280956	Nitrate+Nitrite as Nitrogen	0.718	mg/L	0.050	0.002		
4/28/2015	PARAMS	1504290810	pH	7.91	NA	NA	NA		
4/28/2015	PARAMS	1504290810	Temperature	23.31	ºC	NA	NA		
4/28/2015	PARAMS	1504290810	Conductivity	957	µS/cm	NA	NA		
4/28/2015	PARAMS	1504290810	Turbidity	0.68	NTU	NA	NA		
4/28/2015	8260C	1504290815	Dichlorodifluoromethane (CFC 12)	ND	ug/L	1.0	0.46		
4/28/2015	8260C	1504290815	Methacrylonitrile	ND	ug/L	5.0	0.50		
4/28/2015	8260C	1504290815	4-Methyl-2-pentanone	ND	ug/L	5.0	0.67		
4/28/2015	8260C	1504290815	Acrylonitrile	ND	ug/L	5.0	1.4		
4/28/2015	8260C	1504290815	Dibromochloromethane	ND	ug/L	1.0	0.31		
4/28/2015	8260C	1504290815	Chloromethane	ND	ug/L	2.0	0.21		
4/28/2015	8260C	1504290815	1,2-Dichloropropane	ND	ug/L	1.0	0.20		
4/28/2015	8260C	1504290815	Ethyl Methacrylate	ND	ug/L	2.0	0.44		
4/28/2015	8260C	1504290815	1,1,2-Trichloro-1,2,2-Trifluoroethane	0.31	ug/L	1.0	0.31		J
4/28/2015	8260C	1504290815	2-Chloro-1,3-butadiene	ND	ug/L	1.0	0.27		
4/28/2015	8260C	1504290815	2-Butanone (MEK)	ND	ug/L	5.0	0.81		
4/28/2015	8260C	1504290815	2,2-Dichloro-1,1,1-trifluoroethane (CFC 123)	ND	ug/L	1.0	0.32		

Analytical Results for Sampling Events at JER-2-508

Event Date	Analysis Method	Sample	Constituent	Result	Units	Quant Limit	Det Limit	Extract Efficiency	QA Flag
4/28/2015	8260C	1504290815	Acrolein	ND	ug/L	10	3.0		
4/28/2015	8260C	1504290815	Trichloroethene (TCE)	0.71	ug/L	1.0	0.22		J
4/28/2015	8260C	1504290815	Acetonitrile	ND	ug/L	25	4.7		
4/28/2015	8260C	1504290815	Chloroform	ND	ug/L	1.0	0.25		
4/28/2015	8260C	1504290815	1,2-Dibromo-3-chloropropane (DBCP)	ND	ug/L	2.0	0.74		
4/28/2015	8260C	1504290815	1,2,3-Trichloropropane	ND	ug/L	1.0	0.70		
4/28/2015	8260C	1504290815	1,2-Dibromoethane	ND	ug/L	1.0	0.24		
4/28/2015	8260C	1504290815	1,1-Dichloroethane (1,1-DCA)	ND	ug/L	1.0	0.20		
4/28/2015	8260C	1504290815	Methyl tert-Butyl Ether	ND	ug/L	10	0.29		
4/28/2015	8260C	1504290815	1,1,1,2-Tetrachloroethane	ND	ug/L	1.0	0.22		
4/28/2015	8260C	1504290815	1,1,1-Trichloroethane (TCA)	ND	ug/L	1.0	0.36		
4/28/2015	8260C	1504290815	1,1,2,2-Tetrachloroethane	ND	ug/L	1.0	0.25		
4/28/2015	8260C	1504290815	1,1,2-Trichloroethane	ND	ug/L	1.0	0.34		
4/28/2015	8260C	1504290815	1,4-Dioxane	ND	ug/L	100	20		
4/28/2015	8260C	1504290815	Dichloromethane	ND	ug/L	1.0	0.60		
4/28/2015	8260C	1504290815	Styrene	ND	ug/L	1.0	0.20		
4/28/2015	8260C	1504290815	Propionitrile	ND	ug/L	5.0	3.1		
4/28/2015	8260C	1504290815	Methylcyclohexane	ND	ug/L	10	0.27		
4/28/2015	8260C	1504290815	1,1-Dichloroethene	ND	ug/L	1.0	0.57		
4/28/2015	8260C	1504290815	Tetrachloroethene (PCE)	ND	ug/L	1.0	0.30		
4/28/2015	8260C	1504290815	trans-1,2-Dichloroethene	ND	ug/L	1.0	0.33		
4/28/2015	8260C	1504290815	trans-1,3-Dichloropropene	ND	ug/L	1.0	0.20		
4/28/2015	8260C	1504290815	Tetrahydrofuran (THF)	ND	ug/L	5.0	0.96		
4/28/2015	8260C	1504290815	trans-1,4-Dichloro-2-butene	ND	ug/L	1.0	0.70		
4/28/2015	8260C	1504290815	Dibromomethane	ND	ug/L	1.0	0.32		
4/28/2015	8260C	1504290815	o-Xylene	ND	ug/L	1.0	0.20		
4/28/2015	8260C	1504290815	1,2-Dichloroethane	ND	ug/L	1.0	0.36		
4/28/2015	8260C	1504290815	cis-1,2-Dichloroethene	ND	ug/L	1.0	0.30		
4/28/2015	8260C	1504290815	Acetone	ND	ug/L	10	1.3		
4/28/2015	8260C	1504290815	Dichlorofluoromethane (CFC 21)	ND	ug/L	1.0	0.24		
4/28/2015	8260C	1504290815	3-Chloro-1-propene (Allyl Chloride)	ND	ug/L	2.0	0.26		
4/28/2015	8260C	1504290815	2-Propanol	ND	ug/L	50	8.6		
4/28/2015	8260C	1504290815	Methyl Methacrylate	ND	ug/L	2.0	0.62		
4/28/2015	8260C	1504290815	2-Hexanone	ND	ug/L	5.0	1.7		
4/28/2015	8260C	1504290815	cis-1,3-Dichloropropene	ND	ug/L	1.0	0.24		
4/28/2015	8260C	1504290815	Bromomethane	ND	ug/L	2.0	0.29		
4/28/2015	8260C	1504290815	Chlorobenzene	ND	ug/L	1.0	0.29		
4/28/2015	8260C	1504290815	Carbon Tetrachloride	ND	ug/L	1.0	0.45		

Analytical Results for Sampling Events at JER-2-508

Event Date	Analysis Method	Sample	Constituent	Result	Units	Quant Limit	Det Limit	Extract Efficiency	QA Flag
4/28/2015	8260C	1504290815	Carbon Disulfide	ND	ug/L	1.0	0.22		
4/28/2015	8260C	1504290815	Cyclohexane	ND	ug/L	10	0.25		
4/28/2015	8260C	1504290815	Benzene	ND	ug/L	1.0	0.20		
4/28/2015	8260C	1504290815	Ethylbenzene	ND	ug/L	1.0	0.20		
4/28/2015	8260C	1504290815	m,p-Xylenes	ND	ug/L	2.0	0.33		
4/28/2015	8260C	1504290815	Bromoform	ND	ug/L	1.0	0.42		
4/28/2015	8260C	1504290815	1,2-Dichloro-1,1,2-trifluoroethane (CFC 123a)	ND	ug/L	1.0	0.21		
4/28/2015	8260C	1504290815	2-Methyl-1-propanol (Isobutyl Alcohol)	ND	ug/L	100	11		
4/28/2015	8260C	1504290815	Toluene	ND	ug/L	1.0	0.20		
4/28/2015	8260C	1504290815	Trichlorofluoromethane (CFC 11)	ND	ug/L	1.0	0.20		
4/28/2015	8260C	1504290815	Vinyl Acetate	ND	ug/L	5.0	1.1		
4/28/2015	8260C	1504290815	Vinyl Chloride	ND	ug/L	1.0	0.32		
4/28/2015	8260C	1504290815	Chloroethane	ND	ug/L	2.0	0.24		
4/28/2015	8260C	1504290815	Bromodichloromethane	ND	ug/L	1.0	0.32		
4/28/2015	8260C	1504290815	Iodomethane	ND	ug/L	5.0	0.98		
4/28/2015	TAP 01-04	1504290816	N-Nitrodimethylamine	ND	ng/L	0.48	0.19		
4/28/2015	TAP 01-04	1504290816	N-Nitrosodimethylamine	ND	ng/L	0.48	0.31		
4/28/2015	SW9060	1504290817	Total Organic Carbon	0.77	mg/l	1	0.1611		
4/28/2015	SM 2540 C	1504290818	Total Dissolved Solids (TDS)	733	mg/L	10	5		
4/28/2015	6010C	1504290819	Tin, Total	ND	mg/L	0.50	0.02		
4/28/2015	6010C	1504290819	Magnesium, Total	59.2	mg/L	1.0	0.010		
4/28/2015	6010C	1504290819	Selenium, Total	0.007	mg/L	0.010	0.005		J
4/28/2015	6010C	1504290819	Boron, Total	0.08	mg/L	0.20	0.03		J
4/28/2015	6010C	1504290819	Chromium, Total	ND	mg/L	0.010	0.0004		
4/28/2015	6020A	1504290819	Thallium, Total	0.0002	mg/L	0.0010	0.00003		J
4/28/2015	6010C	1504290819	Vanadium, Total	0.004	mg/L	0.050	0.0005		J
4/28/2015	6010C	1504290819	Silver, Total	ND	mg/L	0.010	0.0006		
4/28/2015	6010C	1504290819	Lead, Total	ND	mg/L	0.050	0.002		
4/28/2015	6010C	1504290819	Strontium, Total	2.33	mg/L	0.10	0.0003		
4/28/2015	6010C	1504290819	Aluminum, Total	ND	mg/L	0.10	0.008		
4/28/2015	6020A	1504290819	Antimony, Total	0.0002	mg/L	0.0010	0.00003		J RB
4/28/2015	6020A	1504290819	Arsenic, Total	0.0006	mg/L	0.0010	0.0004		J
4/28/2015	6010C	1504290819	Beryllium, Total	ND	mg/L	0.0030	0.0002		
4/28/2015	6010C	1504290819	Calcium, Total	89.7	mg/L	1.0	0.04		
4/28/2015	6010C	1504290819	Iron, Total	ND	mg/L	0.10	0.010		
4/28/2015	6010C	1504290819	Cobalt, Total	ND	mg/L	0.050	0.0006		

Analytical Results for Sampling Events at JER-2-508

Event Date	Analysis Method	Sample	Constituent	Result	Units	Quant Limit	Det Limit	Extract Efficiency	QA Flag
4/28/2015	6010C	1504290819	Copper, Total	ND	mg/L	0.020	0.003		
4/28/2015	6010C	1504290819	Barium, Total	0.061	mg/L	0.020	0.0008		
4/28/2015	6010C	1504290819	Zinc, Total	0.034	mg/L	0.020	0.007		
4/28/2015	6010C	1504290819	Sodium, Total	53.1	mg/L	1.0	0.04		
4/28/2015	6010C	1504290819	Manganese, Total	0.007	mg/L	0.010	0.002		J
4/28/2015	7470A	1504290819	Mercury, Total	ND	mg/L	0.00020	0.00003		
4/28/2015	6010C	1504290819	Molybdenum, Total	0.011	mg/L	0.025	0.0007		J
4/28/2015	6010C	1504290819	Nickel, Total	ND	mg/L	0.040	0.0010		
4/28/2015	6010C	1504290819	Potassium, Total	4	mg/L	2.0	0.05		
4/28/2015	6010C	1504290819	Cadmium, Total	0.0003	mg/L	0.0050	0.0002		J
4/28/2015	353.2	1504290820	Nitrate+Nitrite as Nitrogen	0.741	mg/L	0.050	0.002		
4/28/2015	PARAMS	1505071015	Turbidity	0.50	NTU	NA	NA		
4/28/2015	PARAMS	1505071015	Conductivity	867	µS/cm	NA	NA		
4/28/2015	PARAMS	1505071015	Temperature	24.20	ºC	NA	NA		
4/28/2015	PARAMS	1505071015	pH	7.40	NA	NA	NA		
4/28/2015	8260C	1505071016	Vinyl Acetate	ND	ug/L	5.0	1.1		
4/28/2015	8260C	1505071016	Chloroform	ND	ug/L	1.0	0.25		
4/28/2015	8260C	1505071016	Methyl Methacrylate	ND	ug/L	2.0	0.62		
4/28/2015	8260C	1505071016	m,p-Xylenes	ND	ug/L	2.0	0.33		
4/28/2015	8260C	1505071016	o-Xylene	ND	ug/L	1.0	0.20		
4/28/2015	8260C	1505071016	trans-1,2-Dichloroethene	ND	ug/L	1.0	0.33		
4/28/2015	8260C	1505071016	cis-1,2-Dichloroethene	ND	ug/L	1.0	0.30		
4/28/2015	8260C	1505071016	Styrene	ND	ug/L	1.0	0.20		
4/28/2015	8260C	1505071016	trans-1,4-Dichloro-2-butene	ND	ug/L	1.0	0.70		
4/28/2015	8260C	1505071016	Trichlorofluoromethane (CFC 11)	ND	ug/L	1.0	0.20		
4/28/2015	8260C	1505071016	Trichloroethene (TCE)	0.43	ug/L	1.0	0.22		J
4/28/2015	8260C	1505071016	Toluene	ND	ug/L	1.0	0.20		
4/28/2015	8260C	1505071016	Tetrahydrofuran (THF)	ND	ug/L	5.0	0.96		
4/28/2015	8260C	1505071016	cis-1,3-Dichloropropene	ND	ug/L	1.0	0.24		
4/28/2015	8260C	1505071016	Vinyl Chloride	ND	ug/L	1.0	0.32		
4/28/2015	8260C	1505071016	Propionitrile	ND	ug/L	5.0	3.1		
4/28/2015	8260C	1505071016	1,2,3-Trichloropropane	ND	ug/L	1.0	0.70		
4/28/2015	8260C	1505071016	Dibromochloromethane	ND	ug/L	1.0	0.31		
4/28/2015	8260C	1505071016	Dichlorodifluoromethane (CFC 12)	ND	ug/L	1.0	0.46		
4/28/2015	8260C	1505071016	Cyclohexane	ND	ug/L	10	0.25		
4/28/2015	8260C	1505071016	Chloromethane	ND	ug/L	2.0	0.21		

Analytical Results for Sampling Events at JER-2-508

Event Date	Analysis Method	Sample	Constituent	Result	Units	Quant Limit	Det Limit	Extract Efficiency	QA Flag
4/28/2015	8260C	1505071016	Ethylbenzene	ND	ug/L	1.0	0.20		
4/28/2015	8260C	1505071016	Iodomethane	ND	ug/L	5.0	0.98		
4/28/2015	8260C	1505071016	Methacrylonitrile	ND	ug/L	5.0	0.50		
4/28/2015	8260C	1505071016	1,1,2,2-Tetrachloroethane	ND	ug/L	1.0	0.25		
4/28/2015	8260C	1505071016	Methyl tert-Butyl Ether	ND	ug/L	10	0.29		
4/28/2015	8260C	1505071016	1,2-Dichloro-1,1,2-trifluoroethane (CFC 123a)	ND	ug/L	1.0	0.21		
4/28/2015	8260C	1505071016	Dichloromethane	ND	ug/L	1.0	0.60		
4/28/2015	8260C	1505071016	Ethyl Methacrylate	ND	ug/L	2.0	0.44		
4/28/2015	8260C	1505071016	Acrolein	ND	ug/L	10	3.0		
4/28/2015	8260C	1505071016	1,1-Dichloroethane (1,1-DCA)	ND	ug/L	1.0	0.20		
4/28/2015	8260C	1505071016	2-Hexanone	ND	ug/L	5.0	1.7		
4/28/2015	8260C	1505071016	Chlorobenzene	ND	ug/L	1.0	0.29		
4/28/2015	8260C	1505071016	Carbon Disulfide	ND	ug/L	1.0	0.22		
4/28/2015	8260C	1505071016	Bromoform	ND	ug/L	1.0	0.42		
4/28/2015	8260C	1505071016	Bromodichloromethane	ND	ug/L	1.0	0.32		
4/28/2015	8260C	1505071016	Tetrachloroethene (PCE)	ND	ug/L	1.0	0.30		
4/28/2015	8260C	1505071016	3-Chloro-1-propene (Allyl Chloride)	ND	ug/L	2.0	0.26		
4/28/2015	8260C	1505071016	1,2-Dibromoethane	ND	ug/L	1.0	0.24		
4/28/2015	8260C	1505071016	2-Methyl-1-propanol (Isobutyl Alcohol)	ND	ug/L	100	11		
4/28/2015	8260C	1505071016	Acetonitrile	ND	ug/L	25	4.7		
4/28/2015	8260C	1505071016	2-Propanol	ND	ug/L	50	8.6		
4/28/2015	8260C	1505071016	Acetone	ND	ug/L	10	1.3		
4/28/2015	8260C	1505071016	4-Methyl-2-pentanone	ND	ug/L	5.0	0.67		
4/28/2015	8260C	1505071016	Acrylonitrile	ND	ug/L	5.0	1.4		
4/28/2015	8260C	1505071016	Benzene	ND	ug/L	1.0	0.20		
4/28/2015	8260C	1505071016	1,1,1-Trichloroethane (TCA)	ND	ug/L	1.0	0.36		
4/28/2015	8260C	1505071016	Dichlorofluoromethane (CFC 21)	ND	ug/L	1.0	0.24		
4/28/2015	8260C	1505071016	2-Butanone (MEK)	ND	ug/L	5.0	0.81		
4/28/2015	8260C	1505071016	2,2-Dichloro-1,1,1-trifluoroethane (CFC 123)	ND	ug/L	1.0	0.32		
4/28/2015	8260C	1505071016	1,4-Dioxane	ND	ug/L	100	20		
4/28/2015	8260C	1505071016	1,2-Dichloropropane	ND	ug/L	1.0	0.20		
4/28/2015	8260C	1505071016	1,2-Dichloroethane	ND	ug/L	1.0	0.36		
4/28/2015	8260C	1505071016	Carbon Tetrachloride	ND	ug/L	1.0	0.45		
4/28/2015	8260C	1505071016	1,2-Dibromo-3-chloropropane (DBCP)	ND	ug/L	2.0	0.74		
4/28/2015	8260C	1505071016	Bromomethane	ND	ug/L	2.0	0.29		
4/28/2015	8260C	1505071016	1,1,1,2-Tetrachloroethane	ND	ug/L	1.0	0.22		
4/28/2015	8260C	1505071016	1,1-Dichloroethene	ND	ug/L	1.0	0.57		
4/28/2015	8260C	1505071016	1,1,2-Trichloro-1,2,2-Trifluoroethane	ND	ug/L	1.0	0.31		

Analytical Results for Sampling Events at JER-2-508

Event Date	Analysis Method	Sample	Constituent	Result	Units	Quant Limit	Det Limit	Extract Efficiency	QA Flag
4/28/2015	8260C	1505071016	1,1,2-Trichloroethane	ND	ug/L	1.0	0.34		
4/28/2015	8260C	1505071016	Methylcyclohexane	ND	ug/L	10	0.27		
4/28/2015	8260C	1505071016	Chloroethane	ND	ug/L	2.0	0.24		
4/28/2015	8260C	1505071016	trans-1,3-Dichloropropene	ND	ug/L	1.0	0.20		
4/28/2015	8260C	1505071016	2-Chloro-1,3-butadiene	ND	ug/L	1.0	0.27		
4/28/2015	8260C	1505071016	Dibromomethane	ND	ug/L	1.0	0.32		
4/28/2015	TAP 01-04	1505071017	N-Nitrodimethylamine	ND	ng/L	0.47	0.19		
4/28/2015	TAP 01-04	1505071017	N-Nitrosodimethylamine	ND	ng/L	0.47	0.31		
4/28/2015	SW9060	1505071018	Total Organic Carbon	ND	mg/l	1	0.1611		
4/28/2015	SM 2540 C	1505071019	Total Dissolved Solids (TDS)	729	mg/L	10	5		
4/28/2015	6010C	1505071020	Strontium, Total	2.18	mg/L	0.10	0.0003		
4/28/2015	6010C	1505071020	Tin, Total	ND	mg/L	0.50	0.02		
4/28/2015	6010C	1505071020	Sodium, Total	48.3	mg/L	1.0	0.04		
4/28/2015	6020A	1505071020	Arsenic, Total	0.0009	mg/L	0.0010	0.0004		J
4/28/2015	6010C	1505071020	Chromium, Total	ND	mg/L	0.010	0.0004		
4/28/2015	6010C	1505071020	Zinc, Total	0.016	mg/L	0.020	0.007		J
4/28/2015	6010C	1505071020	Cobalt, Total	ND	mg/L	0.050	0.0006		
4/28/2015	6010C	1505071020	Aluminum, Total	ND	mg/L	0.10	0.008		
4/28/2015	6010C	1505071020	Calcium, Total	89.4	mg/L	1.0	0.04		
4/28/2015	6010C	1505071020	Barium, Total	0.06	mg/L	0.020	0.0008		
4/28/2015	6010C	1505071020	Beryllium, Total	ND	mg/L	0.0030	0.0002		
4/28/2015	6010C	1505071020	Boron, Total	0.1	mg/L	0.20	0.03		J
4/28/2015	6010C	1505071020	Copper, Total	ND	mg/L	0.020	0.003		
4/28/2015	6020A	1505071020	Antimony, Total	0.0002	mg/L	0.0010	0.00003		BJ
4/28/2015	6010C	1505071020	Molybdenum, Total	0.011	mg/L	0.025	0.0007		J
4/28/2015	6010C	1505071020	Selenium, Total	ND	mg/L	0.010	0.005		
4/28/2015	6010C	1505071020	Silver, Total	ND	mg/L	0.010	0.0006		
4/28/2015	6010C	1505071020	Potassium, Total	3.7	mg/L	2.0	0.05		
4/28/2015	6010C	1505071020	Nickel, Total	ND	mg/L	0.040	0.0010		
4/28/2015	6020A	1505071020	Thallium, Total	0.0001	mg/L	0.0010	0.00003		J
4/28/2015	7470A	1505071020	Mercury, Total	ND	mg/L	0.00020	0.00003		
4/28/2015	6010C	1505071020	Cadmium, Total	ND	mg/L	0.0050	0.0002		
4/28/2015	6010C	1505071020	Manganese, Total	0.016	mg/L	0.010	0.002		
4/28/2015	6010C	1505071020	Iron, Total	0.04	mg/L	0.10	0.010		J
4/28/2015	6010C	1505071020	Magnesium, Total	57.1	mg/L	1.0	0.010		
4/28/2015	6010C	1505071020	Lead, Total	ND	mg/L	0.050	0.002		

Analytical Results for Sampling Events at JER-2-508

Event Date	Analysis Method	Sample	Constituent	Result	Units	Quant Limit	Det Limit	Extract Efficiency	QA Flag
4/28/2015	6010C	1505071020	Vanadium, Total	0.004	mg/L	0.050	0.0005		J
4/28/2015	353.2	1505071021	Nitrate+Nitrite as Nitrogen	0.947	mg/L	0.050	0.002		
4/28/2015	PARAMS	1505071400	Conductivity	903	µS/cm	NA	NA		
4/28/2015	PARAMS	1505071400	Turbidity	0.42	NTU	NA	NA		
4/28/2015	PARAMS	1505071400	Temperature	24.25	ºC	NA	NA		
4/28/2015	PARAMS	1505071400	pH	7.64	NA	NA	NA		
4/28/2015	8260C	1505071401	Trichloroethene (TCE)	0.35	ug/L	1.0	0.22		J
4/28/2015	8260C	1505071401	Tetrahydrofuran (THF)	ND	ug/L	5.0	0.96		
4/28/2015	8260C	1505071401	Tetrachloroethene (PCE)	ND	ug/L	1.0	0.30		
4/28/2015	8260C	1505071401	Styrene	ND	ug/L	1.0	0.20		
4/28/2015	8260C	1505071401	Propionitrile	ND	ug/L	5.0	3.1		
4/28/2015	8260C	1505071401	Methylcyclohexane	ND	ug/L	10	0.27		
4/28/2015	8260C	1505071401	Methyl tert-Butyl Ether	ND	ug/L	10	0.29		
4/28/2015	8260C	1505071401	Ethyl Methacrylate	ND	ug/L	2.0	0.44		
4/28/2015	8260C	1505071401	Methyl Methacrylate	ND	ug/L	2.0	0.62		
4/28/2015	8260C	1505071401	3-Chloro-1-propene (Allyl Chloride)	ND	ug/L	2.0	0.26		
4/28/2015	8260C	1505071401	1,2,3-Trichloropropane	ND	ug/L	1.0	0.70		
4/28/2015	8260C	1505071401	Iodomethane	ND	ug/L	5.0	0.98		
4/28/2015	8260C	1505071401	1,1,2-Trichloroethane	ND	ug/L	1.0	0.34		
4/28/2015	8260C	1505071401	Toluene	ND	ug/L	1.0	0.20		
4/28/2015	8260C	1505071401	Dichlorofluoromethane (CFC 21)	ND	ug/L	1.0	0.24		
4/28/2015	8260C	1505071401	4-Methyl-2-pentanone	ND	ug/L	5.0	0.67		
4/28/2015	8260C	1505071401	2,2-Dichloro-1,1,1-trifluoroethane (CFC 123)	ND	ug/L	1.0	0.32		
4/28/2015	8260C	1505071401	2-Butanone (MEK)	ND	ug/L	5.0	0.81		
4/28/2015	8260C	1505071401	2-Chloro-1,3-butadiene	ND	ug/L	1.0	0.27		
4/28/2015	8260C	1505071401	1,2-Dichloroethane	ND	ug/L	1.0	0.36		
4/28/2015	8260C	1505071401	2-Hexanone	ND	ug/L	5.0	1.7		
4/28/2015	8260C	1505071401	2-Methyl-1-propanol (Isobutyl Alcohol)	ND	ug/L	100	11		
4/28/2015	8260C	1505071401	Acetone	ND	ug/L	10	1.3		
4/28/2015	8260C	1505071401	Bromoform	ND	ug/L	1.0	0.42		
4/28/2015	8260C	1505071401	Dichlorodifluoromethane (CFC 12)	ND	ug/L	1.0	0.46		
4/28/2015	8260C	1505071401	Methacrylonitrile	ND	ug/L	5.0	0.50		
4/28/2015	8260C	1505071401	1,2-Dibromo-3-chloropropane (DBCP)	ND	ug/L	2.0	0.74		
4/28/2015	8260C	1505071401	Acrolein	ND	ug/L	10	3.0		
4/28/2015	8260C	1505071401	1,1,1-Trichloroethane (TCA)	ND	ug/L	1.0	0.36		
4/28/2015	8260C	1505071401	Benzene	ND	ug/L	1.0	0.20		

Analytical Results for Sampling Events at JER-2-508

Event Date	Analysis Method	Sample	Constituent	Result	Units	Quant Limit	Det Limit	Extract Efficiency	QA Flag
4/28/2015	8260C	1505071401	Acetonitrile	ND	ug/L	25	4.7		
4/28/2015	8260C	1505071401	2-Propanol	ND	ug/L	50	8.6		
4/28/2015	8260C	1505071401	cis-1,3-Dichloropropene	ND	ug/L	1.0	0.24		
4/28/2015	8260C	1505071401	trans-1,4-Dichloro-2-butene	ND	ug/L	1.0	0.70		
4/28/2015	8260C	1505071401	trans-1,3-Dichloropropene	ND	ug/L	1.0	0.20		
4/28/2015	8260C	1505071401	trans-1,2-Dichloroethene	ND	ug/L	1.0	0.33		
4/28/2015	8260C	1505071401	1,1,2-Trichloro-1,2,2-Trifluoroethane	ND	ug/L	1.0	0.31		
4/28/2015	8260C	1505071401	Vinyl Acetate	ND	ug/L	5.0	1.1		
4/28/2015	8260C	1505071401	Carbon Disulfide	ND	ug/L	1.0	0.22		
4/28/2015	8260C	1505071401	cis-1,2-Dichloroethene	ND	ug/L	1.0	0.30		
4/28/2015	8260C	1505071401	1,1,2,2-Tetrachloroethane	ND	ug/L	1.0	0.25		
4/28/2015	8260C	1505071401	m,p-Xylenes	ND	ug/L	2.0	0.33		
4/28/2015	8260C	1505071401	1,2-Dibromoethane	ND	ug/L	1.0	0.24		
4/28/2015	8260C	1505071401	Acrylonitrile	ND	ug/L	5.0	1.4		
4/28/2015	8260C	1505071401	1,4-Dioxane	ND	ug/L	100	20		
4/28/2015	8260C	1505071401	1,2-Dichloropropane	ND	ug/L	1.0	0.20		
4/28/2015	8260C	1505071401	o-Xylene	ND	ug/L	1.0	0.20		
4/28/2015	8260C	1505071401	Vinyl Chloride	ND	ug/L	1.0	0.32		
4/28/2015	8260C	1505071401	Bromodichloromethane	ND	ug/L	1.0	0.32		
4/28/2015	8260C	1505071401	Dibromochloromethane	ND	ug/L	1.0	0.31		
4/28/2015	8260C	1505071401	Cyclohexane	ND	ug/L	10	0.25		
4/28/2015	8260C	1505071401	Chloromethane	ND	ug/L	2.0	0.21		
4/28/2015	8260C	1505071401	Chloroform	ND	ug/L	1.0	0.25		
4/28/2015	8260C	1505071401	Chloroethane	ND	ug/L	2.0	0.24		
4/28/2015	8260C	1505071401	Chlorobenzene	ND	ug/L	1.0	0.29		
4/28/2015	8260C	1505071401	1,2-Dichloro-1,1,2-trifluoroethane (CFC 123a)	ND	ug/L	1.0	0.21		
4/28/2015	8260C	1505071401	Bromomethane	ND	ug/L	2.0	0.29		
4/28/2015	8260C	1505071401	Trichlorofluoromethane (CFC 11)	ND	ug/L	1.0	0.20		
4/28/2015	8260C	1505071401	Dichloromethane	ND	ug/L	1.0	0.60		
4/28/2015	8260C	1505071401	1,1,1,2-Tetrachloroethane	ND	ug/L	1.0	0.22		
4/28/2015	8260C	1505071401	1,1-Dichloroethene	ND	ug/L	1.0	0.57		
4/28/2015	8260C	1505071401	1,1-Dichloroethane (1,1-DCA)	ND	ug/L	1.0	0.20		
4/28/2015	8260C	1505071401	Ethylbenzene	ND	ug/L	1.0	0.20		
4/28/2015	8260C	1505071401	Dibromomethane	ND	ug/L	1.0	0.32		
4/28/2015	8260C	1505071401	Carbon Tetrachloride	ND	ug/L	1.0	0.45		
4/28/2015	TAP 01-04	1505071402	N-Nitrosodimethylamine	ND	ng/L	0.48	0.31		
4/28/2015	TAP 01-04	1505071402	N-Nitrodimethylamine	ND	ng/L	0.48	0.19		

Analytical Results for Sampling Events at JER-2-508

Event Date	Analysis Method	Sample	Constituent	Result	Units	Quant Limit	Det Limit	Extract Efficiency	QA Flag
4/28/2015	SW9060	1505071403	Total Organic Carbon	ND	mg/l	1	0.1611		
4/28/2015	SM 2540 C	1505071404	Total Dissolved Solids (TDS)	727	mg/L	10	5		
4/28/2015	6020A	1505071405	Arsenic, Total	0.0012	mg/L	0.0010	0.0004		
4/28/2015	6010C	1505071405	Lead, Total	ND	mg/L	0.050	0.002		
4/28/2015	6010C	1505071405	Iron, Total	ND	mg/L	0.10	0.010		
4/28/2015	6010C	1505071405	Cobalt, Total	ND	mg/L	0.050	0.0006		
4/28/2015	6010C	1505071405	Cadmium, Total	ND	mg/L	0.0050	0.0002		
4/28/2015	6010C	1505071405	Calcium, Total	84.5	mg/L	1.0	0.04		
4/28/2015	6020A	1505071405	Antimony, Total	0.0002	mg/L	0.0010	0.00003		BJ
4/28/2015	6010C	1505071405	Tin, Total	ND	mg/L	0.50	0.02		
4/28/2015	6010C	1505071405	Barium, Total	0.056	mg/L	0.020	0.0008		
4/28/2015	6010C	1505071405	Beryllium, Total	ND	mg/L	0.0030	0.0002		
4/28/2015	6010C	1505071405	Boron, Total	0.09	mg/L	0.20	0.03		J
4/28/2015	6010C	1505071405	Copper, Total	ND	mg/L	0.020	0.003		
4/28/2015	6010C	1505071405	Aluminum, Total	ND	mg/L	0.10	0.008		
4/28/2015	6010C	1505071405	Manganese, Total	0.015	mg/L	0.010	0.002		
4/28/2015	6010C	1505071405	Chromium, Total	ND	mg/L	0.010	0.0004		
4/28/2015	7470A	1505071405	Mercury, Total	ND	mg/L	0.00020	0.00003		
4/28/2015	6010C	1505071405	Sodium, Total	45.8	mg/L	1.0	0.04		
4/28/2015	6020A	1505071405	Thallium, Total	0.0001	mg/L	0.0010	0.00003		J
4/28/2015	6010C	1505071405	Silver, Total	ND	mg/L	0.010	0.0006		
4/28/2015	6010C	1505071405	Vanadium, Total	0.004	mg/L	0.050	0.0005		J
4/28/2015	6010C	1505071405	Selenium, Total	ND	mg/L	0.010	0.005		
4/28/2015	6010C	1505071405	Potassium, Total	3.6	mg/L	2.0	0.05		
4/28/2015	6010C	1505071405	Zinc, Total	0.016	mg/L	0.020	0.007		J
4/28/2015	6010C	1505071405	Nickel, Total	ND	mg/L	0.040	0.0010		
4/28/2015	6010C	1505071405	Molybdenum, Total	0.01	mg/L	0.025	0.0007		J
4/28/2015	6010C	1505071405	Strontium, Total	2.04	mg/L	0.10	0.0003		
4/28/2015	6010C	1505071405	Magnesium, Total	54.1	mg/L	1.0	0.010		
4/28/2015	353.2	1505071406	Nitrate+Nitrite as Nitrogen	0.947	mg/L	0.050	0.002		

Analytical Results for Sampling Events at JER-2-587

Event Date	Analysis Method	Sample	Constituent	Result	Units	Quant Limit	Det Limit	Extract Efficiency	QA Flag
3/12/2015	PARAMS	1503121045Z	Atmospheric Pressure	12.63	psia	NA	NA		
3/12/2015	PARAMS	1503121045Z	Formation Pressure	54.77	psia	NA	NA		
3/12/2015	PARAMS	1503121045Z	Temperature	22.7	ºC	NA	NA		
3/12/2015	PARAMS	1503121045Z	Conductivity	1049	µS/cm	NA	NA		
3/12/2015	PARAMS	1503121045Z	Turbidity	0.89	NTU	NA	NA		
3/12/2015	PARAMS	1503121045Z	pH	8.09	NA	NA	NA		
3/12/2015	PARAMS	1503121045Z	DTW	491.50	ft	NA	NA		
3/12/2015	8260C	1503160900Z	Cyclohexane	ND	ug/L	10	0.25		
3/12/2015	8260C	1503160900Z	Dibromochloromethane	ND	ug/L	1.0	0.31		
3/12/2015	8260C	1503160900Z	Propionitrile	ND	ug/L	5.0	3.1		
3/12/2015	8260C	1503160900Z	Dichlorodifluoromethane (CFC 12)	ND	ug/L	1.0	0.46		
3/12/2015	8260C	1503160900Z	Dichlorofluoromethane (CFC 21)	ND	ug/L	1.0	0.24		
3/12/2015	8260C	1503160900Z	Dichloromethane	ND	ug/L	1.0	0.60		
3/12/2015	8260C	1503160900Z	Ethylbenzene	ND	ug/L	1.0	0.20		
3/12/2015	8260C	1503160900Z	Bromodichloromethane	ND	ug/L	1.0	0.32		
3/12/2015	8260C	1503160900Z	Methylcyclohexane	ND	ug/L	10	0.27		
3/12/2015	8260C	1503160900Z	Methacrylonitrile	ND	ug/L	5.0	0.50		
3/12/2015	8260C	1503160900Z	Ethyl Methacrylate	ND	ug/L	2.0	0.44		
3/12/2015	8260C	1503160900Z	3-Chloro-1-propene (Allyl Chloride)	ND	ug/L	2.0	0.26		
3/12/2015	8260C	1503160900Z	Benzene	ND	ug/L	1.0	0.20		
3/12/2015	8260C	1503160900Z	Acrylonitrile	ND	ug/L	5.0	1.4		
3/12/2015	8260C	1503160900Z	Acrolein	ND	ug/L	10	3.0		
3/12/2015	8260C	1503160900Z	Acetonitrile	ND	ug/L	25	4.7		
3/12/2015	8260C	1503160900Z	Trichloroethene (TCE)	ND	ug/L	1.0	0.22		
3/12/2015	8260C	1503160900Z	Acetone	ND	ug/L	10	1.3		
3/12/2015	8260C	1503160900Z	1,2-Dichloro-1,1,2-trifluoroethane (CFC 123a)	ND	ug/L	1.0	0.21		
3/12/2015	8260C	1503160900Z	4-Methyl-2-pentanone	ND	ug/L	5.0	0.67		
3/12/2015	8260C	1503160900Z	1,1,2-Trichloroethane	ND	ug/L	1.0	0.34		
3/12/2015	8260C	1503160900Z	Methyl tert-Butyl Ether	ND	ug/L	10	0.29		
3/12/2015	8260C	1503160900Z	Toluene	ND	ug/L	1.0	0.20		
3/12/2015	8260C	1503160900Z	2-Hexanone	ND	ug/L	5.0	1.7		
3/12/2015	8260C	1503160900Z	2-Methyl-1-propanol (Isobutyl Alcohol)	ND	ug/L	100	11		
3/12/2015	8260C	1503160900Z	2-Propanol	ND	ug/L	50	8.6		
3/12/2015	8260C	1503160900Z	1,2-Dibromo-3-chloropropane (DBCP)	ND	ug/L	2.0	0.74		
3/12/2015	8260C	1503160900Z	1,1-Dichloroethane (1,1-DCA)	ND	ug/L	1.0	0.20		
3/12/2015	8260C	1503160900Z	2-Butanone (MEK)	ND	ug/L	5.0	0.81		
3/12/2015	8260C	1503160900Z	1,2-Dibromoethane	ND	ug/L	1.0	0.24		

Analytical Results for Sampling Events at JER-2-587

Event Date	Analysis Method	Sample	Constituent	Result	Units	Quant Limit	Det Limit	Extract Efficiency	QA Flag
3/12/2015	8260C	1503160900Z	1,2-Dichloroethane	ND	ug/L	1.0	0.36		
3/12/2015	8260C	1503160900Z	1,2-Dichloropropane	ND	ug/L	1.0	0.20		
3/12/2015	8260C	1503160900Z	1,4-Dioxane	ND	ug/L	100	20		
3/12/2015	8260C	1503160900Z	2,2-Dichloro-1,1,1-trifluoroethane (CFC 123)	ND	ug/L	1.0	0.32		
3/12/2015	8260C	1503160900Z	1,1,2-Trichloro-1,2,2-Trifluoroethane	ND	ug/L	1.0	0.31		
3/12/2015	8260C	1503160900Z	cis-1,3-Dichloropropene	ND	ug/L	1.0	0.24		
3/12/2015	8260C	1503160900Z	Dibromomethane	ND	ug/L	1.0	0.32		
3/12/2015	8260C	1503160900Z	Tetrahydrofuran (THF)	ND	ug/L	5.0	0.96		
3/12/2015	8260C	1503160900Z	Chloroform	ND	ug/L	1.0	0.25		
3/12/2015	8260C	1503160900Z	Bromoform	ND	ug/L	1.0	0.42		
3/12/2015	8260C	1503160900Z	Vinyl Chloride	ND	ug/L	1.0	0.32		
3/12/2015	8260C	1503160900Z	trans-1,2-Dichloroethene	ND	ug/L	1.0	0.33		
3/12/2015	8260C	1503160900Z	trans-1,4-Dichloro-2-butene	ND	ug/L	1.0	0.70		
3/12/2015	8260C	1503160900Z	Tetrachloroethene (PCE)	ND	ug/L	1.0	0.30		
3/12/2015	8260C	1503160900Z	o-Xylene	ND	ug/L	1.0	0.20		
3/12/2015	8260C	1503160900Z	Chloroethane	ND	ug/L	2.0	0.24		
3/12/2015	8260C	1503160900Z	cis-1,2-Dichloroethene	ND	ug/L	1.0	0.30		
3/12/2015	8260C	1503160900Z	Styrene	ND	ug/L	1.0	0.20		
3/12/2015	8260C	1503160900Z	Vinyl Acetate	ND	ug/L	5.0	1.1		
3/12/2015	8260C	1503160900Z	Trichlorofluoromethane (CFC 11)	ND	ug/L	1.0	0.20		
3/12/2015	8260C	1503160900Z	Iodomethane	ND	ug/L	5.0	0.98		
3/12/2015	8260C	1503160900Z	Chloromethane	ND	ug/L	2.0	0.21		
3/12/2015	8260C	1503160900Z	trans-1,3-Dichloropropene	ND	ug/L	1.0	0.20		
3/12/2015	8260C	1503160900Z	m,p-Xylenes	ND	ug/L	2.0	0.33		
3/12/2015	8260C	1503160900Z	1,1,2,2-Tetrachloroethane	ND	ug/L	1.0	0.25		
3/12/2015	8260C	1503160900Z	1,1,1-Trichloroethane (TCA)	ND	ug/L	1.0	0.36		
3/12/2015	8260C	1503160900Z	1,1,1,2-Tetrachloroethane	ND	ug/L	1.0	0.22		
3/12/2015	8260C	1503160900Z	Chlorobenzene	ND	ug/L	1.0	0.29		
3/12/2015	8260C	1503160900Z	Methyl Methacrylate	ND	ug/L	2.0	0.62		
3/12/2015	8260C	1503160900Z	1,2,3-Trichloropropane	ND	ug/L	1.0	0.70		
3/12/2015	8260C	1503160900Z	Bromomethane	ND	ug/L	2.0	0.29		
3/12/2015	8260C	1503160900Z	Carbon Tetrachloride	ND	ug/L	1.0	0.45		
3/12/2015	8260C	1503160900Z	1,1-Dichloroethene	ND	ug/L	1.0	0.57		
3/12/2015	8260C	1503160900Z	Carbon Disulfide	ND	ug/L	1.0	0.22		
3/12/2015	8260C	1503160900Z	2-Chloro-1,3-butadiene	ND	ug/L	1.0	0.27		
3/12/2015	8260C	1503160901Z	1,1,2-Trichloroethane	ND	ug/L	0.50	0.23		
3/12/2015	8260C	1503160901Z	Bromomethane	ND	ug/L	0.50	0.24		

Analytical Results for Sampling Events at JER-2-587

Event Date	Analysis Method	Sample	Constituent	Result	Units	Quant Limit	Det Limit	Extract Efficiency	QA Flag
3/12/2015	8260C	1503160901Z	Chlorobenzene	ND	ug/L	0.50	0.20		
3/12/2015	8260C	1503160901Z	2-Methyl-1-propanol (Isobutyl Alcohol)	ND	ug/L	100	8.1		
3/12/2015	8260C	1503160901Z	1,1-Dichloroethene	ND	ug/L	0.50	0.28		
3/12/2015	8260C	1503160901Z	Bromodichloromethane	ND	ug/L	0.50	0.32		
3/12/2015	8260C	1503160901Z	Bromoform	ND	ug/L	1.0	0.21		
3/12/2015	8260C	1503160901Z	Carbon Disulfide	ND	ug/L	0.50	0.20		
3/12/2015	8260C	1503160901Z	Carbon Tetrachloride	ND	ug/L	0.50	0.45		
3/12/2015	8260C	1503160901Z	1,2-Dichloroethane	ND	ug/L	0.50	0.20		
3/12/2015	8260C	1503160901Z	Benzene	ND	ug/L	0.50	0.20		
3/12/2015	8260C	1503160901Z	1,1,2,2-Tetrachloroethane	ND	ug/L	0.50	0.20		
3/12/2015	8260C	1503160901Z	Ethyl Methacrylate	ND	ug/L	0.50	0.20		
3/12/2015	8260C	1503160901Z	1,1,2-Trichloro-1,2,2-Trifluoroethane	ND	ug/L	0.50	0.31		
3/12/2015	8260C	1503160901Z	1,1,1-Trichloroethane (TCA)	ND	ug/L	0.50	0.36		
3/12/2015	8260C	1503160901Z	Ethylbenzene	ND	ug/L	0.50	0.20		
3/12/2015	8260C	1503160901Z	Dibromochloromethane	ND	ug/L	0.50	0.20		
3/12/2015	8260C	1503160901Z	Methylcyclohexane	ND	ug/L	1.0	0.27		
3/12/2015	8260C	1503160901Z	Methyl tert-Butyl Ether	ND	ug/L	0.50	0.20		
3/12/2015	8260C	1503160901Z	Methyl Methacrylate	ND	ug/L	0.50	0.39		
3/12/2015	8260C	1503160901Z	Methacrylonitrile	ND	ug/L	1.0	0.50		
3/12/2015	8260C	1503160901Z	2-Propanol	ND	ug/L	40	8.6		
3/12/2015	8260C	1503160901Z	Dichloromethane	ND	ug/L	0.50	0.20		
3/12/2015	8260C	1503160901Z	Acetonitrile	ND	ug/L	25	3.7		
3/12/2015	8260C	1503160901Z	Chloroethane	ND	ug/L	0.50	0.22		
3/12/2015	8260C	1503160901Z	1,1,1,2-Tetrachloroethane	ND	ug/L	0.50	0.20		
3/12/2015	8260C	1503160901Z	1,1-Dichloroethane (1,1-DCA)	ND	ug/L	0.50	0.20		
3/12/2015	8260C	1503160901Z	3-Chloro-1-propene (Allyl Chloride)	ND	ug/L	0.50	0.25		
3/12/2015	8260C	1503160901Z	4-Methyl-2-pentanone	ND	ug/L	2.0	0.20		
3/12/2015	8260C	1503160901Z	Acetone	ND	ug/L	5.0	1.3		
3/12/2015	8260C	1503160901Z	Iodomethane	ND	ug/L	5.0	0.27		
3/12/2015	8260C	1503160901Z	Acrolein	ND	ug/L	5.0	3.0		
3/12/2015	8260C	1503160901Z	trans-1,2-Dichloroethene	ND	ug/L	0.50	0.20		
3/12/2015	8260C	1503160901Z	cis-1,2-Dichloroethene	ND	ug/L	0.50	0.20		
3/12/2015	8260C	1503160901Z	1,2-Dichloro-1,1,2-trifluoroethane (CFC 123a)	ND	ug/L	0.50	0.20		
3/12/2015	8260C	1503160901Z	m,p-Xylenes	ND	ug/L	1.0	0.26		
3/12/2015	8260C	1503160901Z	Cyclohexane	ND	ug/L	1.0	0.25		
3/12/2015	8260C	1503160901Z	Chloroform	ND	ug/L	0.50	0.20		
3/12/2015	8260C	1503160901Z	Vinyl Acetate	ND	ug/L	1.0	0.78		
3/12/2015	8260C	1503160901Z	Vinyl Chloride	ND	ug/L	0.50	0.22		

Analytical Results for Sampling Events at JER-2-587

Event Date	Analysis Method	Sample	Constituent	Result	Units	Quant Limit	Det Limit	Extract Efficiency	QA Flag
3/12/2015	8260C	1503160901Z	Trichlorofluoromethane (CFC 11)	ND	ug/L	0.50	0.20		
3/12/2015	8260C	1503160901Z	1,2-Dibromo-3-chloropropane (DBCP)	ND	ug/L	1.0	0.74		
3/12/2015	8260C	1503160901Z	trans-1,4-Dichloro-2-butene	ND	ug/L	0.52	0.52		
3/12/2015	8260C	1503160901Z	Acrylonitrile	ND	ug/L	2.5	0.78		
3/12/2015	8260C	1503160901Z	Chloromethane	ND	ug/L	0.50	0.20		
3/12/2015	8260C	1503160901Z	trans-1,3-Dichloropropene	ND	ug/L	0.50	0.20		
3/12/2015	8260C	1503160901Z	Dichlorofluoromethane (CFC 21)	ND	ug/L	0.50	0.20		
3/12/2015	8260C	1503160901Z	Dichlorodifluoromethane (CFC 12)	ND	ug/L	0.50	0.21		
3/12/2015	8260C	1503160901Z	2-Chloro-1,3-butadiene	ND	ug/L	0.50	0.22		
3/12/2015	8260C	1503160901Z	1,2-Dibromoethane	ND	ug/L	0.50	0.24		
3/12/2015	8260C	1503160901Z	2-Hexanone	ND	ug/L	5.0	0.73		
3/12/2015	8260C	1503160901Z	1,2-Dichloropropane	ND	ug/L	0.50	0.20		
3/12/2015	8260C	1503160901Z	1,4-Dioxane	ND	ug/L	40	18		
3/12/2015	8260C	1503160901Z	Dibromomethane	ND	ug/L	0.50	0.22		
3/12/2015	8260C	1503160901Z	2,2-Dichloro-1,1,1-trifluoroethane (CFC 123)	ND	ug/L	0.50	0.32		
3/12/2015	8260C	1503160901Z	Styrene	ND	ug/L	0.50	0.20		
3/12/2015	8260C	1503160901Z	2-Butanone (MEK)	ND	ug/L	5.0	0.81		
3/12/2015	8260C	1503160901Z	o-Xylene	ND	ug/L	0.50	0.20		
3/12/2015	8260C	1503160901Z	1,2,3-Trichloropropane	ND	ug/L	0.50	0.32		
3/12/2015	8260C	1503160901Z	cis-1,3-Dichloropropene	ND	ug/L	0.50	0.20		
3/12/2015	8260C	1503160901Z	Tetrachloroethene (PCE)	ND	ug/L	0.50	0.20		
3/12/2015	8260C	1503160901Z	Tetrahydrofuran (THF)	ND	ug/L	5.0	0.66		
3/12/2015	8260C	1503160901Z	Toluene	ND	ug/L	0.50	0.20		
3/12/2015	8260C	1503160901Z	Trichloroethene (TCE)	ND	ug/L	0.50	0.20		
3/12/2015	8260C	1503160901Z	Propionitrile	ND	ug/L	2.5	1.7		
3/12/2015	TAP 01-04	1503160902Z	Bromacil	ND	ug/L	0.0098	0.0049	90	
3/12/2015	TAP 01-04	1503160902Z	N-Nitrosodimethylamine	ND	ug/L	0.0098	0.0049	86	
3/12/2015	TAP 01-04	1503160902Z	N-Nitrodimethylamine	ND	ug/L	0.0098	0.0049	85	
3/12/2015	TAP 01-04	1503160903Z	N-Nitrosodimethylamine	0.65	ng/L	0.00094	0.00047		
3/12/2015	TAP 01-04	1503160903Z	N-Nitrodimethylamine	ND	ng/L	0.00094	0.00047		
3/12/2015	6010C	1503160940Z	Zinc, Total	0.15	mg/L	0.020	0.005		
3/12/2015	6010C	1503160940Z	Potassium, Total	6.1	mg/L	2.0	0.2		
3/12/2015	6010C	1503160940Z	Magnesium, Total	53.8	mg/L	1.0	0.02		
3/12/2015	6010C	1503160940Z	Strontium, Total	2.84	mg/L	0.10	0.002		
3/12/2015	6010C	1503160940Z	Vanadium, Total	0.002	mg/L	0.050	0.0007		J
3/12/2015	6020A	1503160940Z	Arsenic, Total	0.0006	mg/L	0.0010	0.0004		J

Analytical Results for Sampling Events at JER-2-587

Event Date	Analysis Method	Sample	Constituent	Result	Units	Quant Limit	Det Limit	Extract Efficiency	QA Flag
3/12/2015	6010C	1503160940Z	Aluminum, Total	ND	mg/L	0.10	0.03		
3/12/2015	6020A	1503160940Z	Thallium, Total	0.0001	mg/L	0.0010	0.00006		J
3/12/2015	6010C	1503160940Z	Sodium, Total	62.1	mg/L	1.0	0.09		
3/12/2015	6010C	1503160940Z	Selenium, Total	0.017	mg/L	0.010	0.003		
3/12/2015	6010C	1503160940Z	Nickel, Total	ND	mg/L	0.040	0.002		
3/12/2015	6010C	1503160940Z	Molybdenum, Total	0.01	mg/L	0.025	0.002		J
3/12/2015	7470A	1503160940Z	Mercury, Total	ND	mg/L	0.00020	0.00003		
3/12/2015	6010C	1503160940Z	Tin, Total	ND	mg/L	0.50	0.05		
3/12/2015	6020A	1503160940Z	Antimony, Total	0.0004	mg/L	0.0010	0.0004		J
3/12/2015	6010C	1503160940Z	Chromium, Total	ND	mg/L	0.010	0.0009		
3/12/2015	6010C	1503160940Z	Manganese, Total	0.214	mg/L	0.010	0.002		
3/12/2015	6010C	1503160940Z	Lead, Total	ND	mg/L	0.050	0.002		
3/12/2015	6010C	1503160940Z	Calcium, Total	86.4	mg/L	5.0	0.8		
3/12/2015	6010C	1503160940Z	Copper, Total	ND	mg/L	0.020	0.004		
3/12/2015	6010C	1503160940Z	Iron, Total	ND	mg/L	0.10	0.02		
3/12/2015	6010C	1503160940Z	Cobalt, Total	ND	mg/L	0.050	0.002		
3/12/2015	6010C	1503160940Z	Silver, Total	ND	mg/L	0.010	0.0009		
3/12/2015	6010C	1503160940Z	Cadmium, Total	ND	mg/L	0.0050	0.0005		
3/12/2015	6010C	1503160940Z	Boron, Total	0.08	mg/L	0.20	0.03		J
3/12/2015	6010C	1503160940Z	Beryllium, Total	ND	mg/L	0.0030	0.0002		
3/12/2015	6010C	1503160940Z	Barium, Total	0.077	mg/L	0.020	0.004		
3/12/2015	SW9060	1503160941Z	Total Organic Carbon	ND	mg/l	1	0.1611		
3/12/2015	SM 2540 C	1503160942Z	Total Dissolved Solids (TDS)	734	mg/L	10	5		
3/12/2015	353.2	1503160943Z	Nitrate+Nitrite as Nitrogen	0.204	mg/L	0.050	0.002		
3/12/2015	PARAMS	1503161020Z	pH	7.73	NA	NA	NA		
3/12/2015	PARAMS	1503161020Z	DTW	493.55	ft	NA	NA		
3/12/2015	PARAMS	1503161020Z	Atmospheric Pressure	12.41	psia	NA	NA		
3/12/2015	PARAMS	1503161020Z	Turbidity	1.43	NTU	NA	NA		
3/12/2015	PARAMS	1503161020Z	Temperature	20.13	ºC	NA	NA		
3/12/2015	PARAMS	1503161020Z	Conductivity	1066	µS/cm	NA	NA		
4/24/2015	PARAMS	1504240800	Temperature	21.00	ºC	NA	NA		
4/24/2015	PARAMS	1504240800	Conductivity	999	µS/cm	NA	NA		
4/24/2015	PARAMS	1504240800	Turbidity	2.84	NTU	NA	NA		
4/24/2015	PARAMS	1504240800	DTW	491.10	ft	NA	NA		
4/24/2015	PARAMS	1504240800	pH	7.67	NA	NA	NA		

Analytical Results for Sampling Events at JER-2-587

Event Date	Analysis Method	Sample	Constituent	Result	Units	Quant Limit	Det Limit	Extract Efficiency	QA Flag
4/24/2015	8260C	1504240805	1,1,1-Trichloroethane (TCA)	ND	ug/L	1.0	0.36		
4/24/2015	8260C	1504240805	1,1,2,2-Tetrachloroethane	ND	ug/L	1.0	0.25		
4/24/2015	8260C	1504240805	1,2-Dichloropropane	ND	ug/L	1.0	0.20		
4/24/2015	8260C	1504240805	1,1,2-Trichloroethane	ND	ug/L	1.0	0.34		
4/24/2015	8260C	1504240805	Acrylonitrile	ND	ug/L	5.0	1.4		
4/24/2015	8260C	1504240805	1,1,2-Trichloro-1,2,2-Trifluoroethane	ND	ug/L	1.0	0.31		
4/24/2015	8260C	1504240805	Trichlorofluoromethane (CFC 11)	ND	ug/L	1.0	0.20		
4/24/2015	8260C	1504240805	1,1-Dichloroethane (1,1-DCA)	ND	ug/L	1.0	0.20		
4/24/2015	8260C	1504240805	1,1-Dichloroethene	ND	ug/L	1.0	0.57		
4/24/2015	8260C	1504240805	1,2,3-Trichloropropane	ND	ug/L	1.0	0.70		
4/24/2015	8260C	1504240805	1,2-Dibromo-3-chloropropane (DBCP)	ND	ug/L	2.0	0.74		
4/24/2015	8260C	1504240805	Trichloroethene (TCE)	0.99	ug/L	1.0	0.22		J
4/24/2015	8260C	1504240805	Dibromochloromethane	ND	ug/L	1.0	0.31		
4/24/2015	8260C	1504240805	Chloromethane	ND	ug/L	2.0	0.21		
4/24/2015	8260C	1504240805	Methacrylonitrile	ND	ug/L	5.0	0.50		
4/24/2015	8260C	1504240805	Methyl Methacrylate	ND	ug/L	2.0	0.62		
4/24/2015	8260C	1504240805	Iodomethane	ND	ug/L	5.0	0.98		
4/24/2015	8260C	1504240805	Methyl tert-Butyl Ether	ND	ug/L	10	0.29		
4/24/2015	8260C	1504240805	Dichlorofluoromethane (CFC 21)	ND	ug/L	1.0	0.24		
4/24/2015	8260C	1504240805	Ethylbenzene	ND	ug/L	1.0	0.20		
4/24/2015	8260C	1504240805	Ethyl Methacrylate	ND	ug/L	2.0	0.44		
4/24/2015	8260C	1504240805	Dichlorodifluoromethane (CFC 12)	ND	ug/L	1.0	0.46		
4/24/2015	8260C	1504240805	cis-1,3-Dichloropropene	ND	ug/L	1.0	0.24		
4/24/2015	8260C	1504240805	1,4-Dioxane	ND	ug/L	100	20		
4/24/2015	8260C	1504240805	Dichloromethane	ND	ug/L	1.0	0.60		
4/24/2015	8260C	1504240805	1,2-Dibromoethane	ND	ug/L	1.0	0.24		
4/24/2015	8260C	1504240805	Vinyl Chloride	1.1	ug/L	1.0	0.32		
4/24/2015	8260C	1504240805	Methylcyclohexane	ND	ug/L	10	0.27		
4/24/2015	8260C	1504240805	Bromomethane	ND	ug/L	2.0	0.29		
4/24/2015	8260C	1504240805	Carbon Disulfide	ND	ug/L	1.0	0.22		
4/24/2015	8260C	1504240805	Carbon Tetrachloride	ND	ug/L	1.0	0.45		
4/24/2015	8260C	1504240805	Chlorobenzene	ND	ug/L	1.0	0.29		
4/24/2015	8260C	1504240805	Chloroethane	ND	ug/L	2.0	0.24		
4/24/2015	8260C	1504240805	2-Chloro-1,3-butadiene	ND	ug/L	1.0	0.27		
4/24/2015	8260C	1504240805	Styrene	ND	ug/L	1.0	0.20		
4/24/2015	8260C	1504240805	2,2-Dichloro-1,1,1-trifluoroethane (CFC 123)	ND	ug/L	1.0	0.32		
4/24/2015	8260C	1504240805	Benzene	ND	ug/L	1.0	0.20		
4/24/2015	8260C	1504240805	1,2-Dichloro-1,1,2-trifluoroethane (CFC 123a)	ND	ug/L	1.0	0.21		

Analytical Results for Sampling Events at JER-2-587

Event Date	Analysis Method	Sample	Constituent	Result	Units	Quant Limit	Det Limit	Extract Efficiency	QA Flag
4/24/2015	8260C	1504240805	trans-1,4-Dichloro-2-butene	ND	ug/L	1.0	0.70		
4/24/2015	8260C	1504240805	trans-1,3-Dichloropropene	ND	ug/L	1.0	0.20		
4/24/2015	8260C	1504240805	trans-1,2-Dichloroethene	ND	ug/L	1.0	0.33		
4/24/2015	8260C	1504240805	cis-1,2-Dichloroethene	ND	ug/L	1.0	0.30		
4/24/2015	8260C	1504240805	m,p-Xylenes	ND	ug/L	2.0	0.33		
4/24/2015	8260C	1504240805	o-Xylene	ND	ug/L	1.0	0.20		
4/24/2015	8260C	1504240805	2-Butanone (MEK)	ND	ug/L	5.0	0.81		
4/24/2015	8260C	1504240805	2-Methyl-1-propanol (Isobutyl Alcohol)	ND	ug/L	100	11		
4/24/2015	8260C	1504240805	Propionitrile	ND	ug/L	5.0	3.1		
4/24/2015	8260C	1504240805	Toluene	ND	ug/L	1.0	0.20		
4/24/2015	8260C	1504240805	Tetrachloroethene (PCE)	ND	ug/L	1.0	0.30		
4/24/2015	8260C	1504240805	Tetrahydrofuran (THF)	ND	ug/L	5.0	0.96		
4/24/2015	8260C	1504240805	Cyclohexane	ND	ug/L	10	0.25		
4/24/2015	8260C	1504240805	Chloroform	ND	ug/L	1.0	0.25		
4/24/2015	8260C	1504240805	Bromodichloromethane	ND	ug/L	1.0	0.32		
4/24/2015	8260C	1504240805	Bromoform	ND	ug/L	1.0	0.42		
4/24/2015	8260C	1504240805	2-Hexanone	ND	ug/L	5.0	1.7		
4/24/2015	8260C	1504240805	1,1,1,2-Tetrachloroethane	ND	ug/L	1.0	0.22		
4/24/2015	8260C	1504240805	2-Propanol	ND	ug/L	50	8.6		
4/24/2015	8260C	1504240805	3-Chloro-1-propene (Allyl Chloride)	ND	ug/L	2.0	0.26		
4/24/2015	8260C	1504240805	4-Methyl-2-pentanone	ND	ug/L	5.0	0.67		
4/24/2015	8260C	1504240805	Acetone	ND	ug/L	10	1.3		
4/24/2015	8260C	1504240805	Acetonitrile	ND	ug/L	25	4.7		
4/24/2015	8260C	1504240805	Acrolein	ND	ug/L	10	3.0		
4/24/2015	8260C	1504240805	1,2-Dichloroethane	ND	ug/L	1.0	0.36		
4/24/2015	8260C	1504240805	Vinyl Acetate	ND	ug/L	5.0	1.1		
4/24/2015	8260C	1504240805	Dibromomethane	ND	ug/L	1.0	0.32		
4/24/2015	TAP 01-04	1504240807	N-Nitrodimethylamine	4.1	ng/L	0.47	0.19		
4/24/2015	TAP 01-04	1504240807	N-Nitrosodimethylamine	44	ng/L	0.47	0.31		
4/24/2015	SW9060	1504240809	Total Organic Carbon	0.99	mg/l	1	0.1611		
4/24/2015	SM 2540 C	1504240810	Total Dissolved Solids (TDS)	712	mg/L	10	5		
4/24/2015	6020A	1504240811	Arsenic, Total	0.0008	mg/L	0.0010	0.0004		J
4/24/2015	6010C	1504240811	Calcium, Total	88.2	mg/L	1.0	0.04		
4/24/2015	6010C	1504240811	Nickel, Total	ND	mg/L	0.040	0.0010		
4/24/2015	7470A	1504240811	Mercury, Total	ND	mg/L	0.00020	0.00003		
4/24/2015	6010C	1504240811	Copper, Total	0.006	mg/L	0.020	0.003		J

Analytical Results for Sampling Events at JER-2-587

Event Date	Analysis Method	Sample	Constituent	Result	Units	Quant Limit	Det Limit	Extract Efficiency	QA Flag
4/24/2015	6010C	1504240811	Selenium, Total	0.007	mg/L	0.010	0.005		J
4/24/2015	6010C	1504240811	Cadmium, Total	0.0002	mg/L	0.0050	0.0002		J RB
4/24/2015	6020A	1504240811	Antimony, Total	0.0003	mg/L	0.0010	0.00003		J RB
4/24/2015	6010C	1504240811	Silver, Total	ND	mg/L	0.010	0.0006		
4/24/2015	6010C	1504240811	Barium, Total	0.069	mg/L	0.020	0.0008		
4/24/2015	6010C	1504240811	Beryllium, Total	ND	mg/L	0.0030	0.0002		
4/24/2015	6010C	1504240811	Boron, Total	0.09	mg/L	0.20	0.03		J
4/24/2015	6010C	1504240811	Molybdenum, Total	0.009	mg/L	0.025	0.0007		J
4/24/2015	6010C	1504240811	Chromium, Total	ND	mg/L	0.010	0.0004		
4/24/2015	6010C	1504240811	Strontium, Total	2.62	mg/L	0.10	0.0003		
4/24/2015	6010C	1504240811	Zinc, Total	0.343	mg/L	0.020	0.007		
4/24/2015	6010C	1504240811	Potassium, Total	5.7	mg/L	2.0	0.05		
4/24/2015	6010C	1504240811	Vanadium, Total	0.004	mg/L	0.050	0.0005		J
4/24/2015	6010C	1504240811	Sodium, Total	62	mg/L	1.0	0.04		
4/24/2015	6020A	1504240811	Thallium, Total	0.00007	mg/L	0.0010	0.00003		J
4/24/2015	6010C	1504240811	Cobalt, Total	ND	mg/L	0.050	0.0006		
4/24/2015	6010C	1504240811	Tin, Total	ND	mg/L	0.50	0.02		
4/24/2015	6010C	1504240811	Manganese, Total	0.079	mg/L	0.010	0.002		
4/24/2015	6010C	1504240811	Magnesium, Total	53	mg/L	1.0	0.010		
4/24/2015	6010C	1504240811	Lead, Total	ND	mg/L	0.050	0.002		
4/24/2015	6010C	1504240811	Iron, Total	ND	mg/L	0.10	0.009		
4/24/2015	6010C	1504240811	Aluminum, Total	ND	mg/L	0.10	0.008		
4/24/2015	353.2	1504240812	Nitrate+Nitrite as Nitrogen	0.594	mg/L	0.050	0.002		
4/24/2015	PARAMS	1504240830	Temperature	21.03	ºC	NA	NA		
4/24/2015	PARAMS	1504240830	pH	7.67	NA	NA	NA		
4/24/2015	PARAMS	1504240830	Turbidity	1.89	NTU	NA	NA		
4/24/2015	PARAMS	1504240830	Conductivity	1004	µS/cm	NA	NA		
4/24/2015	8260C	1504240831	Propionitrile	ND	ug/L	5.0	3.1		
4/24/2015	8260C	1504240831	1,1,1-Trichloroethane (TCA)	ND	ug/L	1.0	0.36		
4/24/2015	8260C	1504240831	4-Methyl-2-pentanone	ND	ug/L	5.0	0.67		
4/24/2015	8260C	1504240831	2,2-Dichloro-1,1,1-trifluoroethane (CFC 123)	ND	ug/L	1.0	0.32		
4/24/2015	8260C	1504240831	Vinyl Chloride	ND	ug/L	1.0	0.32		
4/24/2015	8260C	1504240831	Methyl Methacrylate	ND	ug/L	2.0	0.62		
4/24/2015	8260C	1504240831	Methylcyclohexane	ND	ug/L	10	0.27		
4/24/2015	8260C	1504240831	Styrene	ND	ug/L	1.0	0.20		
4/24/2015	8260C	1504240831	Tetrachloroethene (PCE)	ND	ug/L	1.0	0.30		

Analytical Results for Sampling Events at JER-2-587

Event Date	Analysis Method	Sample	Constituent	Result	Units	Quant Limit	Det Limit	Extract Efficiency	QA Flag
4/24/2015	8260C	1504240831	Tetrahydrofuran (THF)	ND	ug/L	5.0	0.96		
4/24/2015	8260C	1504240831	Toluene	ND	ug/L	1.0	0.20		
4/24/2015	8260C	1504240831	Trichloroethene (TCE)	0.57	ug/L	1.0	0.22		J
4/24/2015	8260C	1504240831	1,2-Dichloro-1,1,2-trifluoroethane (CFC 123a)	ND	ug/L	1.0	0.21		
4/24/2015	8260C	1504240831	Vinyl Acetate	ND	ug/L	5.0	1.1		
4/24/2015	8260C	1504240831	Methyl tert-Butyl Ether	ND	ug/L	10	0.29		
4/24/2015	8260C	1504240831	1,1-Dichloroethane (1,1-DCA)	ND	ug/L	1.0	0.20		
4/24/2015	8260C	1504240831	Ethyl Methacrylate	ND	ug/L	2.0	0.44		
4/24/2015	8260C	1504240831	1,2,3-Trichloropropane	ND	ug/L	1.0	0.70		
4/24/2015	8260C	1504240831	1,1-Dichloroethene	ND	ug/L	1.0	0.57		
4/24/2015	8260C	1504240831	1,2-Dichloroethane	ND	ug/L	1.0	0.36		
4/24/2015	8260C	1504240831	1,1,2-Trichloro-1,2,2-Trifluoroethane	ND	ug/L	1.0	0.31		
4/24/2015	8260C	1504240831	2-Chloro-1,3-butadiene	ND	ug/L	1.0	0.27		
4/24/2015	8260C	1504240831	2-Propanol	ND	ug/L	50	8.6		
4/24/2015	8260C	1504240831	1,1,2,2-Tetrachloroethane	ND	ug/L	1.0	0.25		
4/24/2015	8260C	1504240831	3-Chloro-1-propene (Allyl Chloride)	ND	ug/L	2.0	0.26		
4/24/2015	8260C	1504240831	1,2-Dichloropropane	ND	ug/L	1.0	0.20		
4/24/2015	8260C	1504240831	Iodomethane	ND	ug/L	5.0	0.98		
4/24/2015	8260C	1504240831	1,4-Dioxane	ND	ug/L	100	20		
4/24/2015	8260C	1504240831	2-Butanone (MEK)	ND	ug/L	5.0	0.81		
4/24/2015	8260C	1504240831	2-Hexanone	ND	ug/L	5.0	1.7		
4/24/2015	8260C	1504240831	2-Methyl-1-propanol (Isobutyl Alcohol)	ND	ug/L	100	11		
4/24/2015	8260C	1504240831	1,1,2-Trichloroethane	ND	ug/L	1.0	0.34		
4/24/2015	8260C	1504240831	Dibromomethane	ND	ug/L	1.0	0.32		
4/24/2015	8260C	1504240831	Carbon Disulfide	ND	ug/L	1.0	0.22		
4/24/2015	8260C	1504240831	1,2-Dibromoethane	ND	ug/L	1.0	0.24		
4/24/2015	8260C	1504240831	Chloroethane	ND	ug/L	2.0	0.24		
4/24/2015	8260C	1504240831	Acetonitrile	ND	ug/L	25	4.7		
4/24/2015	8260C	1504240831	Chloromethane	ND	ug/L	2.0	0.21		
4/24/2015	8260C	1504240831	Bromomethane	ND	ug/L	2.0	0.29		
4/24/2015	8260C	1504240831	Dibromochloromethane	ND	ug/L	1.0	0.31		
4/24/2015	8260C	1504240831	Bromoform	ND	ug/L	1.0	0.42		
4/24/2015	8260C	1504240831	Dichlorodifluoromethane (CFC 12)	ND	ug/L	1.0	0.46		
4/24/2015	8260C	1504240831	Dichlorofluoromethane (CFC 21)	ND	ug/L	1.0	0.24		
4/24/2015	8260C	1504240831	Dichloromethane	ND	ug/L	1.0	0.60		
4/24/2015	8260C	1504240831	Methacrylonitrile	ND	ug/L	5.0	0.50		
4/24/2015	8260C	1504240831	Chlorobenzene	ND	ug/L	1.0	0.29		
4/24/2015	8260C	1504240831	Ethylbenzene	ND	ug/L	1.0	0.20		

Analytical Results for Sampling Events at JER-2-587

Event Date	Analysis Method	Sample	Constituent	Result	Units	Quant Limit	Det Limit	Extract Efficiency	QA Flag
4/24/2015	8260C	1504240831	Cyclohexane	ND	ug/L	10	0.25		
4/24/2015	8260C	1504240831	Trichlorofluoromethane (CFC 11)	ND	ug/L	1.0	0.20		
4/24/2015	8260C	1504240831	cis-1,2-Dichloroethene	ND	ug/L	1.0	0.30		
4/24/2015	8260C	1504240831	cis-1,3-Dichloropropene	ND	ug/L	1.0	0.24		
4/24/2015	8260C	1504240831	m,p-Xylenes	ND	ug/L	2.0	0.33		
4/24/2015	8260C	1504240831	o-Xylene	ND	ug/L	1.0	0.20		
4/24/2015	8260C	1504240831	trans-1,2-Dichloroethene	ND	ug/L	1.0	0.33		
4/24/2015	8260C	1504240831	Carbon Tetrachloride	ND	ug/L	1.0	0.45		
4/24/2015	8260C	1504240831	trans-1,4-Dichloro-2-butene	ND	ug/L	1.0	0.70		
4/24/2015	8260C	1504240831	1,1,1,2-Tetrachloroethane	ND	ug/L	1.0	0.22		
4/24/2015	8260C	1504240831	Chloroform	ND	ug/L	1.0	0.25		
4/24/2015	8260C	1504240831	Acetone	ND	ug/L	10	1.3		
4/24/2015	8260C	1504240831	Acrolein	ND	ug/L	10	3.0		
4/24/2015	8260C	1504240831	Acrylonitrile	ND	ug/L	5.0	1.4		
4/24/2015	8260C	1504240831	Benzene	ND	ug/L	1.0	0.20		
4/24/2015	8260C	1504240831	Bromodichloromethane	ND	ug/L	1.0	0.32		
4/24/2015	8260C	1504240831	trans-1,3-Dichloropropene	ND	ug/L	1.0	0.20		
4/24/2015	8260C	1504240831	1,2-Dibromo-3-chloropropane (DBCP)	ND	ug/L	2.0	0.74		
4/24/2015	TAP 01-04	1504240832	N-Nitrodimethylamine	ND	ng/L	0.48	0.19		
4/24/2015	TAP 01-04	1504240832	N-Nitrosodimethylamine	7.2	ng/L	0.48	0.31		
4/24/2015	SW9060	1504240833	Total Organic Carbon	0.67	mg/l	1	0.1611		
4/24/2015	SM 2540 C	1504240834	Total Dissolved Solids (TDS)	718	mg/L	10	5		
4/24/2015	6010C	1504240835	Calcium, Total	97.9	mg/L	1.0	0.04		
4/24/2015	6020A	1504240835	Antimony, Total	0.0002	mg/L	0.0010	0.00003		J RB
4/24/2015	6020A	1504240835	Arsenic, Total	0.0008	mg/L	0.0010	0.0004		J
4/24/2015	6010C	1504240835	Barium, Total	0.087	mg/L	0.020	0.0008		
4/24/2015	6010C	1504240835	Lead, Total	ND	mg/L	0.050	0.002		
4/24/2015	6010C	1504240835	Beryllium, Total	ND	mg/L	0.0030	0.0002		
4/24/2015	6010C	1504240835	Iron, Total	0.07	mg/L	0.10	0.009		J
4/24/2015	6010C	1504240835	Copper, Total	0.004	mg/L	0.020	0.003		J
4/24/2015	6010C	1504240835	Aluminum, Total	0.09	mg/L	0.10	0.008		J
4/24/2015	6010C	1504240835	Chromium, Total	ND	mg/L	0.010	0.0004		
4/24/2015	6010C	1504240835	Vanadium, Total	0.005	mg/L	0.050	0.0005		J
4/24/2015	6010C	1504240835	Selenium, Total	ND	mg/L	0.010	0.005		
4/24/2015	6010C	1504240835	Cadmium, Total	0.0002	mg/L	0.0050	0.0002		J RB
4/24/2015	6010C	1504240835	Cobalt, Total	0.0006	mg/L	0.050	0.0006		J RB

Analytical Results for Sampling Events at JER-2-587

Event Date	Analysis Method	Sample	Constituent	Result	Units	Quant Limit	Det Limit	Extract Efficiency	QA Flag
4/24/2015	6010C	1504240835	Magnesium, Total	58.1	mg/L	1.0	0.010		
4/24/2015	6010C	1504240835	Strontium, Total	2.76	mg/L	0.10	0.0003		
4/24/2015	6010C	1504240835	Potassium, Total	6	mg/L	2.0	0.05		
4/24/2015	6010C	1504240835	Sodium, Total	57	mg/L	1.0	0.04		
4/24/2015	6020A	1504240835	Thallium, Total	0.0001	mg/L	0.0010	0.00003		J
4/24/2015	6010C	1504240835	Boron, Total	0.11	mg/L	0.20	0.03		J
4/24/2015	6010C	1504240835	Zinc, Total	0.051	mg/L	0.020	0.007		
4/24/2015	6010C	1504240835	Manganese, Total	0.159	mg/L	0.010	0.002		
4/24/2015	7470A	1504240835	Mercury, Total	ND	mg/L	0.00020	0.00003		
4/24/2015	6010C	1504240835	Silver, Total	ND	mg/L	0.010	0.0006		
4/24/2015	6010C	1504240835	Nickel, Total	ND	mg/L	0.040	0.0010		
4/24/2015	6010C	1504240835	Molybdenum, Total	0.01	mg/L	0.025	0.0007		J
4/24/2015	6010C	1504240835	Tin, Total	ND	mg/L	0.50	0.02		
4/24/2015	353.2	1504240836	Nitrate+Nitrite as Nitrogen	0.506	mg/L	0.050	0.002		
4/24/2015	PARAMS	1504240915	pH	7.54	NA	NA	NA		
4/24/2015	PARAMS	1504240915	Turbidity	1.02	NTU	NA	NA		
4/24/2015	PARAMS	1504240915	Conductivity	987	µS/cm	NA	NA		
4/24/2015	PARAMS	1504240915	Temperature	22.54	ºC	NA	NA		
4/24/2015	8260C	1504240916	Benzene	ND	ug/L	1.0	0.20		
4/24/2015	8260C	1504240916	1,1,1,2-Tetrachloroethane	ND	ug/L	1.0	0.22		
4/24/2015	8260C	1504240916	1,1,1-Trichloroethane (TCA)	ND	ug/L	1.0	0.36		
4/24/2015	8260C	1504240916	1,1,2,2-Tetrachloroethane	ND	ug/L	1.0	0.25		
4/24/2015	8260C	1504240916	1,1,2-Trichloroethane	ND	ug/L	1.0	0.34		
4/24/2015	8260C	1504240916	1,1,2-Trichloro-1,2,2-Trifluoroethane	ND	ug/L	1.0	0.31		
4/24/2015	8260C	1504240916	1,1-Dichloroethane (1,1-DCA)	ND	ug/L	1.0	0.20		
4/24/2015	8260C	1504240916	Chlorobenzene	ND	ug/L	1.0	0.29		
4/24/2015	8260C	1504240916	Cyclohexane	ND	ug/L	10	0.25		
4/24/2015	8260C	1504240916	Chloromethane	ND	ug/L	2.0	0.21		
4/24/2015	8260C	1504240916	Bromoform	ND	ug/L	1.0	0.42		
4/24/2015	8260C	1504240916	Bromomethane	ND	ug/L	2.0	0.29		
4/24/2015	8260C	1504240916	Trichloroethene (TCE)	0.3	ug/L	1.0	0.22		J
4/24/2015	8260C	1504240916	Carbon Tetrachloride	ND	ug/L	1.0	0.45		
4/24/2015	8260C	1504240916	Acrolein	ND	ug/L	10	3.0		
4/24/2015	8260C	1504240916	Iodomethane	ND	ug/L	5.0	0.98		
4/24/2015	8260C	1504240916	Dibromochloromethane	ND	ug/L	1.0	0.31		
4/24/2015	8260C	1504240916	Dibromomethane	ND	ug/L	1.0	0.32		

Analytical Results for Sampling Events at JER-2-587

Event Date	Analysis Method	Sample	Constituent	Result	Units	Quant Limit	Det Limit	Extract Efficiency	QA Flag
4/24/2015	8260C	1504240916	Dichlorodifluoromethane (CFC 12)	ND	ug/L	1.0	0.46		
4/24/2015	8260C	1504240916	1,2,3-Trichloropropane	ND	ug/L	1.0	0.70		
4/24/2015	8260C	1504240916	Dichlorofluoromethane (CFC 21)	ND	ug/L	1.0	0.24		
4/24/2015	8260C	1504240916	Dichloromethane	ND	ug/L	1.0	0.60		
4/24/2015	8260C	1504240916	Bromodichloromethane	ND	ug/L	1.0	0.32		
4/24/2015	8260C	1504240916	Ethylbenzene	ND	ug/L	1.0	0.20		
4/24/2015	8260C	1504240916	Methacrylonitrile	ND	ug/L	5.0	0.50		
4/24/2015	8260C	1504240916	Methyl Methacrylate	ND	ug/L	2.0	0.62		
4/24/2015	8260C	1504240916	Carbon Disulfide	ND	ug/L	1.0	0.22		
4/24/2015	8260C	1504240916	Methyl tert-Butyl Ether	ND	ug/L	10	0.29		
4/24/2015	8260C	1504240916	Toluene	ND	ug/L	1.0	0.20		
4/24/2015	8260C	1504240916	Methylcyclohexane	ND	ug/L	10	0.27		
4/24/2015	8260C	1504240916	Propionitrile	ND	ug/L	5.0	3.1		
4/24/2015	8260C	1504240916	Ethyl Methacrylate	ND	ug/L	2.0	0.44		
4/24/2015	8260C	1504240916	trans-1,3-Dichloropropene	ND	ug/L	1.0	0.20		
4/24/2015	8260C	1504240916	cis-1,2-Dichloroethene	ND	ug/L	1.0	0.30		
4/24/2015	8260C	1504240916	Trichlorofluoromethane (CFC 11)	ND	ug/L	1.0	0.20		
4/24/2015	8260C	1504240916	Vinyl Acetate	ND	ug/L	5.0	1.1		
4/24/2015	8260C	1504240916	3-Chloro-1-propene (Allyl Chloride)	ND	ug/L	2.0	0.26		
4/24/2015	8260C	1504240916	Vinyl Chloride	ND	ug/L	1.0	0.32		
4/24/2015	8260C	1504240916	2-Hexanone	ND	ug/L	5.0	1.7		
4/24/2015	8260C	1504240916	cis-1,3-Dichloropropene	ND	ug/L	1.0	0.24		
4/24/2015	8260C	1504240916	Tetrahydrofuran (THF)	ND	ug/L	5.0	0.96		
4/24/2015	8260C	1504240916	1,2-Dichloro-1,1,2-trifluoroethane (CFC 123a)	ND	ug/L	1.0	0.21		
4/24/2015	8260C	1504240916	trans-1,4-Dichloro-2-butene	ND	ug/L	1.0	0.70		
4/24/2015	8260C	1504240916	m,p-Xylenes	ND	ug/L	2.0	0.33		
4/24/2015	8260C	1504240916	o-Xylene	ND	ug/L	1.0	0.20		
4/24/2015	8260C	1504240916	trans-1,2-Dichloroethene	ND	ug/L	1.0	0.33		
4/24/2015	8260C	1504240916	1,1-Dichloroethene	ND	ug/L	1.0	0.57		
4/24/2015	8260C	1504240916	1,2-Dibromo-3-chloropropane (DBCP)	ND	ug/L	2.0	0.74		
4/24/2015	8260C	1504240916	2-Butanone (MEK)	ND	ug/L	5.0	0.81		
4/24/2015	8260C	1504240916	Chloroform	ND	ug/L	1.0	0.25		
4/24/2015	8260C	1504240916	Acrylonitrile	ND	ug/L	5.0	1.4		
4/24/2015	8260C	1504240916	4-Methyl-2-pentanone	ND	ug/L	5.0	0.67		
4/24/2015	8260C	1504240916	1,2-Dichloroethane	ND	ug/L	1.0	0.36		
4/24/2015	8260C	1504240916	1,2-Dichloropropane	ND	ug/L	1.0	0.20		
4/24/2015	8260C	1504240916	Tetrachloroethene (PCE)	ND	ug/L	1.0	0.30		
4/24/2015	8260C	1504240916	2,2-Dichloro-1,1,1-trifluoroethane (CFC 123)	ND	ug/L	1.0	0.32		

Analytical Results for Sampling Events at JER-2-587

Event Date	Analysis Method	Sample	Constituent	Result	Units	Quant Limit	Det Limit	Extract Efficiency	QA Flag
4/24/2015	8260C	1504240916	Chloroethane	ND	ug/L	2.0	0.24		
4/24/2015	8260C	1504240916	2-Chloro-1,3-butadiene	ND	ug/L	1.0	0.27		
4/24/2015	8260C	1504240916	1,2-Dibromoethane	ND	ug/L	1.0	0.24		
4/24/2015	8260C	1504240916	2-Propanol	ND	ug/L	50	8.6		
4/24/2015	8260C	1504240916	2-Methyl-1-propanol (Isobutyl Alcohol)	ND	ug/L	100	11		
4/24/2015	8260C	1504240916	Acetonitrile	ND	ug/L	25	4.7		
4/24/2015	8260C	1504240916	Styrene	ND	ug/L	1.0	0.20		
4/24/2015	8260C	1504240916	1,4-Dioxane	ND	ug/L	100	20		
4/24/2015	8260C	1504240916	Acetone	ND	ug/L	10	1.3		
4/24/2015	TAP 01-04	1504240917	N-Nitrosodimethylamine	2.2	ng/L	0.48	0.31		
4/24/2015	TAP 01-04	1504240917	N-Nitrodimethylamine	ND	ng/L	0.48	0.19		
4/24/2015	SW9060	1504240918	Total Organic Carbon	0.38	mg/l	1	0.1611		
4/24/2015	SM 2540 C	1504240919	Total Dissolved Solids (TDS)	696	mg/L	10	5		
4/24/2015	7470A	1504240920	Mercury, Total	ND	mg/L	0.00020	0.00003		
4/24/2015	6010C	1504240920	Molybdenum, Total	0.009	mg/L	0.025	0.0007		J
4/24/2015	6010C	1504240920	Nickel, Total	ND	mg/L	0.040	0.0010		
4/24/2015	6010C	1504240920	Calcium, Total	89.2	mg/L	1.0	0.04		
4/24/2015	6010C	1504240920	Selenium, Total	0.007	mg/L	0.010	0.005		J
4/24/2015	6010C	1504240920	Sodium, Total	52.9	mg/L	1.0	0.04		
4/24/2015	6010C	1504240920	Manganese, Total	0.136	mg/L	0.010	0.002		
4/24/2015	6010C	1504240920	Iron, Total	ND	mg/L	0.10	0.009		
4/24/2015	6010C	1504240920	Chromium, Total	ND	mg/L	0.010	0.0004		
4/24/2015	6010C	1504240920	Copper, Total	ND	mg/L	0.020	0.003		
4/24/2015	6010C	1504240920	Potassium, Total	5.6	mg/L	2.0	0.05		
4/24/2015	6010C	1504240920	Lead, Total	ND	mg/L	0.050	0.002		
4/24/2015	6010C	1504240920	Cadmium, Total	0.0002	mg/L	0.0050	0.0002		J RB
4/24/2015	6010C	1504240920	Strontium, Total	2.5	mg/L	0.10	0.0003		
4/24/2015	6010C	1504240920	Boron, Total	0.09	mg/L	0.20	0.03		J
4/24/2015	6010C	1504240920	Beryllium, Total	ND	mg/L	0.0030	0.0002		
4/24/2015	6010C	1504240920	Barium, Total	0.075	mg/L	0.020	0.0008		
4/24/2015	6010C	1504240920	Aluminum, Total	ND	mg/L	0.10	0.008		
4/24/2015	6010C	1504240920	Silver, Total	ND	mg/L	0.010	0.0006		
4/24/2015	6010C	1504240920	Cobalt, Total	ND	mg/L	0.050	0.0006		
4/24/2015	6020A	1504240920	Thallium, Total	0.0001	mg/L	0.0010	0.00003		J
4/24/2015	6010C	1504240920	Tin, Total	ND	mg/L	0.50	0.02		
4/24/2015	6010C	1504240920	Vanadium, Total	0.003	mg/L	0.050	0.0005		J

Analytical Results for Sampling Events at JER-2-587

Event Date	Analysis Method	Sample	Constituent	Result	Units	Quant Limit	Det Limit	Extract Efficiency	QA Flag
4/24/2015	6010C	1504240920	Zinc, Total	0.011	mg/L	0.020	0.007		J
4/24/2015	6010C	1504240920	Magnesium, Total	53.2	mg/L	1.0	0.010		
4/24/2015	6020A	1504240920	Arsenic, Total	0.0009	mg/L	0.0010	0.0004		J
4/24/2015	6020A	1504240920	Antimony, Total	0.00006	mg/L	0.0010	0.00003		J RB
4/24/2015	353.2	1504240921	Nitrate+Nitrite as Nitrogen	0.675	mg/L	0.050	0.002		
4/24/2015	PARAMS	1504241205	Temperature	24.35	ºC	NA	NA		
4/24/2015	PARAMS	1504241205	pH	7.69	NA	NA	NA		
4/24/2015	PARAMS	1504241205	Turbidity	1.69	NTU	NA	NA		
4/24/2015	PARAMS	1504241205	Conductivity	984	µS/cm	NA	NA		
4/24/2015	8260C	1504241206	1,1,2,2-Tetrachloroethane	ND	ug/L	1.0	0.25		
4/24/2015	8260C	1504241206	trans-1,2-Dichloroethene	ND	ug/L	1.0	0.33		
4/24/2015	8260C	1504241206	trans-1,3-Dichloropropene	ND	ug/L	1.0	0.20		
4/24/2015	8260C	1504241206	1,2,3-Trichloropropane	ND	ug/L	1.0	0.70		
4/24/2015	8260C	1504241206	trans-1,4-Dichloro-2-butene	ND	ug/L	1.0	0.70		
4/24/2015	8260C	1504241206	cis-1,2-Dichloroethene	ND	ug/L	1.0	0.30		
4/24/2015	8260C	1504241206	1,2-Dichloro-1,1,2-trifluoroethane (CFC 123a)	ND	ug/L	1.0	0.21		
4/24/2015	8260C	1504241206	1,1,1-Trichloroethane (TCA)	ND	ug/L	1.0	0.36		
4/24/2015	8260C	1504241206	1,1,2-Trichloroethane	ND	ug/L	1.0	0.34		
4/24/2015	8260C	1504241206	1,1,2-Trichloro-1,2,2-Trifluoroethane	ND	ug/L	1.0	0.31		
4/24/2015	8260C	1504241206	1,1-Dichloroethane (1,1-DCA)	ND	ug/L	1.0	0.20		
4/24/2015	8260C	1504241206	1,1-Dichloroethene	ND	ug/L	1.0	0.57		
4/24/2015	8260C	1504241206	o-Xylene	ND	ug/L	1.0	0.20		
4/24/2015	8260C	1504241206	1,1,1,2-Tetrachloroethane	ND	ug/L	1.0	0.22		
4/24/2015	8260C	1504241206	2-Hexanone	ND	ug/L	5.0	1.7		
4/24/2015	8260C	1504241206	m,p-Xylenes	ND	ug/L	2.0	0.33		
4/24/2015	8260C	1504241206	Iodomethane	ND	ug/L	5.0	0.98		
4/24/2015	8260C	1504241206	Dichloromethane	ND	ug/L	1.0	0.60		
4/24/2015	8260C	1504241206	2-Chloro-1,3-butadiene	ND	ug/L	1.0	0.27		
4/24/2015	8260C	1504241206	1,2-Dibromoethane	ND	ug/L	1.0	0.24		
4/24/2015	8260C	1504241206	1,2-Dichloroethane	ND	ug/L	1.0	0.36		
4/24/2015	8260C	1504241206	1,2-Dichloropropane	ND	ug/L	1.0	0.20		
4/24/2015	8260C	1504241206	1,4-Dioxane	ND	ug/L	100	20		
4/24/2015	8260C	1504241206	2,2-Dichloro-1,1,1-trifluoroethane (CFC 123)	ND	ug/L	1.0	0.32		
4/24/2015	8260C	1504241206	Dichlorofluoromethane (CFC 21)	ND	ug/L	1.0	0.24		
4/24/2015	8260C	1504241206	Methyl Methacrylate	ND	ug/L	2.0	0.62		
4/24/2015	8260C	1504241206	Carbon Disulfide	ND	ug/L	1.0	0.22		

Analytical Results for Sampling Events at JER-2-587

Event Date	Analysis Method	Sample	Constituent	Result	Units	Quant Limit	Det Limit	Extract Efficiency	QA Flag
4/24/2015	8260C	1504241206	Methyl tert-Butyl Ether	ND	ug/L	10	0.29		
4/24/2015	8260C	1504241206	2-Methyl-1-propanol (Isobutyl Alcohol)	ND	ug/L	100	11		
4/24/2015	8260C	1504241206	Acetone	ND	ug/L	10	1.3		
4/24/2015	8260C	1504241206	Benzene	ND	ug/L	1.0	0.20		
4/24/2015	8260C	1504241206	Bromodichloromethane	ND	ug/L	1.0	0.32		
4/24/2015	8260C	1504241206	2-Propanol	ND	ug/L	50	8.6		
4/24/2015	8260C	1504241206	Bromoform	ND	ug/L	1.0	0.42		
4/24/2015	8260C	1504241206	Bromomethane	ND	ug/L	2.0	0.29		
4/24/2015	8260C	1504241206	Acrylonitrile	ND	ug/L	5.0	1.4		
4/24/2015	8260C	1504241206	Acrolein	ND	ug/L	10	3.0		
4/24/2015	8260C	1504241206	3-Chloro-1-propene (Allyl Chloride)	ND	ug/L	2.0	0.26		
4/24/2015	8260C	1504241206	2-Butanone (MEK)	ND	ug/L	5.0	0.81		
4/24/2015	8260C	1504241206	Chloroform	ND	ug/L	1.0	0.25		
4/24/2015	8260C	1504241206	Trichlorofluoromethane (CFC 11)	ND	ug/L	1.0	0.20		
4/24/2015	8260C	1504241206	Vinyl Chloride	ND	ug/L	1.0	0.32		
4/24/2015	8260C	1504241206	Vinyl Acetate	ND	ug/L	5.0	1.1		
4/24/2015	8260C	1504241206	Trichloroethene (TCE)	0.22	ug/L	1.0	0.22		J
4/24/2015	8260C	1504241206	Tetrahydrofuran (THF)	ND	ug/L	5.0	0.96		
4/24/2015	8260C	1504241206	Tetrachloroethene (PCE)	ND	ug/L	1.0	0.30		
4/24/2015	8260C	1504241206	Styrene	ND	ug/L	1.0	0.20		
4/24/2015	8260C	1504241206	Propionitrile	ND	ug/L	5.0	3.1		
4/24/2015	8260C	1504241206	Acetonitrile	ND	ug/L	25	4.7		
4/24/2015	8260C	1504241206	Ethylbenzene	ND	ug/L	1.0	0.20		
4/24/2015	8260C	1504241206	Methacrylonitrile	ND	ug/L	5.0	0.50		
4/24/2015	8260C	1504241206	Chloroethane	ND	ug/L	2.0	0.24		
4/24/2015	8260C	1504241206	cis-1,3-Dichloropropene	ND	ug/L	1.0	0.24		
4/24/2015	8260C	1504241206	Chloromethane	ND	ug/L	2.0	0.21		
4/24/2015	8260C	1504241206	Cyclohexane	ND	ug/L	10	0.25		
4/24/2015	8260C	1504241206	Dibromochloromethane	ND	ug/L	1.0	0.31		
4/24/2015	8260C	1504241206	Dichlorodifluoromethane (CFC 12)	ND	ug/L	1.0	0.46		
4/24/2015	8260C	1504241206	Carbon Tetrachloride	ND	ug/L	1.0	0.45		
4/24/2015	8260C	1504241206	Ethyl Methacrylate	ND	ug/L	2.0	0.44		
4/24/2015	8260C	1504241206	Dibromomethane	ND	ug/L	1.0	0.32		
4/24/2015	8260C	1504241206	4-Methyl-2-pentanone	ND	ug/L	5.0	0.67		
4/24/2015	8260C	1504241206	1,2-Dibromo-3-chloropropane (DBCP)	ND	ug/L	2.0	0.74		
4/24/2015	8260C	1504241206	Methylcyclohexane	ND	ug/L	10	0.27		
4/24/2015	8260C	1504241206	Chlorobenzene	ND	ug/L	1.0	0.29		
4/24/2015	8260C	1504241206	Toluene	ND	ug/L	1.0	0.20		

Analytical Results for Sampling Events at JER-2-587

Event Date	Analysis Method	Sample	Constituent	Result	Units	Quant Limit	Det Limit	Extract Efficiency	QA Flag
4/24/2015	TAP 01-04	1504241207	N-Nitrodimethylamine	ND	ng/L	0.48	0.19		
4/24/2015	TAP 01-04	1504241207	N-Nitrosodimethylamine	0.58	ng/L	0.48	0.31		
4/24/2015	SW9060	1504241208	Total Organic Carbon	0.37	mg/l	1	0.1611		
4/24/2015	SM 2540 C	1504241209	Total Dissolved Solids (TDS)	713	mg/L	10	5		
4/24/2015	6010C	1504241210	Barium, Total	0.074	mg/L	0.020	0.0008		
4/24/2015	6010C	1504241210	Potassium, Total	5.7	mg/L	2.0	0.05		
4/24/2015	6010C	1504241210	Molybdenum, Total	0.01	mg/L	0.025	0.0007		J
4/24/2015	6010C	1504241210	Vanadium, Total	0.004	mg/L	0.050	0.0005		J
4/24/2015	6010C	1504241210	Silver, Total	ND	mg/L	0.010	0.0006		
4/24/2015	6010C	1504241210	Strontium, Total	2.48	mg/L	0.10	0.0003		
4/24/2015	6020A	1504241210	Thallium, Total	0.00007	mg/L	0.0010	0.00003		J
4/24/2015	6010C	1504241210	Tin, Total	ND	mg/L	0.50	0.02		
4/24/2015	6010C	1504241210	Copper, Total	ND	mg/L	0.020	0.003		
4/24/2015	6010C	1504241210	Zinc, Total	ND	mg/L	0.020	0.007		
4/24/2015	6010C	1504241210	Beryllium, Total	ND	mg/L	0.0030	0.0002		
4/24/2015	6010C	1504241210	Iron, Total	ND	mg/L	0.10	0.009		
4/24/2015	6010C	1504241210	Magnesium, Total	55.4	mg/L	1.0	0.010		
4/24/2015	6010C	1504241210	Cadmium, Total	ND	mg/L	0.0050	0.0002		
4/24/2015	6010C	1504241210	Cobalt, Total	ND	mg/L	0.050	0.0006		
4/24/2015	6010C	1504241210	Chromium, Total	ND	mg/L	0.010	0.0004		
4/24/2015	7470A	1504241210	Mercury, Total	ND	mg/L	0.00020	0.00003		
4/24/2015	6010C	1504241210	Boron, Total	0.09	mg/L	0.20	0.03		J
4/24/2015	6010C	1504241210	Selenium, Total	0.007	mg/L	0.010	0.005		J
4/24/2015	6010C	1504241210	Aluminum, Total	ND	mg/L	0.10	0.008		
4/24/2015	6020A	1504241210	Antimony, Total	0.00003	mg/L	0.0010	0.00003		J RB
4/24/2015	6010C	1504241210	Lead, Total	ND	mg/L	0.050	0.002		
4/24/2015	6020A	1504241210	Arsenic, Total	0.0009	mg/L	0.0010	0.0004		J
4/24/2015	6010C	1504241210	Manganese, Total	0.143	mg/L	0.010	0.002		
4/24/2015	6010C	1504241210	Sodium, Total	56	mg/L	1.0	0.04		
4/24/2015	6010C	1504241210	Calcium, Total	91.4	mg/L	1.0	0.04		
4/24/2015	6010C	1504241210	Nickel, Total	ND	mg/L	0.040	0.0010		
4/24/2015	353.2	1504241211	Nitrate+Nitrite as Nitrogen	0.842	mg/L	0.050	0.002		
4/24/2015	PARAMS	1504241500	Turbidity	1.76	NTU	NA	NA		
4/24/2015	PARAMS	1504241500	Conductivity	995	µS/cm	NA	NA		
4/24/2015	PARAMS	1504241500	Temperature	24.53	ºC	NA	NA		

Analytical Results for Sampling Events at JER-2-587

Event Date	Analysis Method	Sample	Constituent	Result	Units	Quant Limit	Det Limit	Extract Efficiency	QA Flag
4/24/2015	PARAMS	1504241500	pH	7.69	NA	NA	NA		
4/24/2015	8260C	1504241505	2-Hexanone	ND	ug/L	5.0	1.7		
4/24/2015	8260C	1504241505	Ethylbenzene	ND	ug/L	1.0	0.20		
4/24/2015	8260C	1504241505	Iodomethane	ND	ug/L	5.0	0.98		
4/24/2015	8260C	1504241505	Methacrylonitrile	ND	ug/L	5.0	0.50		
4/24/2015	8260C	1504241505	Methyl tert-Butyl Ether	ND	ug/L	10	0.29		
4/24/2015	8260C	1504241505	Acrylonitrile	ND	ug/L	5.0	1.4		
4/24/2015	8260C	1504241505	2,2-Dichloro-1,1,1-trifluoroethane (CFC 123)	ND	ug/L	1.0	0.32		
4/24/2015	8260C	1504241505	Dichloromethane	ND	ug/L	1.0	0.60		
4/24/2015	8260C	1504241505	2-Chloro-1,3-butadiene	ND	ug/L	1.0	0.27		
4/24/2015	8260C	1504241505	Cyclohexane	ND	ug/L	10	0.25		
4/24/2015	8260C	1504241505	2-Propanol	ND	ug/L	50	8.6		
4/24/2015	8260C	1504241505	2-Butanone (MEK)	ND	ug/L	5.0	0.81		
4/24/2015	8260C	1504241505	Methylcyclohexane	ND	ug/L	10	0.27		
4/24/2015	8260C	1504241505	4-Methyl-2-pentanone	ND	ug/L	5.0	0.67		
4/24/2015	8260C	1504241505	Dichlorodifluoromethane (CFC 12)	ND	ug/L	1.0	0.46		
4/24/2015	8260C	1504241505	Benzene	ND	ug/L	1.0	0.20		
4/24/2015	8260C	1504241505	Chloromethane	ND	ug/L	2.0	0.21		
4/24/2015	8260C	1504241505	Chloroform	ND	ug/L	1.0	0.25		
4/24/2015	8260C	1504241505	Chloroethane	ND	ug/L	2.0	0.24		
4/24/2015	8260C	1504241505	Chlorobenzene	ND	ug/L	1.0	0.29		
4/24/2015	8260C	1504241505	Carbon Tetrachloride	ND	ug/L	1.0	0.45		
4/24/2015	8260C	1504241505	1,2-Dichloro-1,1,2-trifluoroethane (CFC 123a)	ND	ug/L	1.0	0.21		
4/24/2015	8260C	1504241505	Vinyl Chloride	ND	ug/L	1.0	0.32		
4/24/2015	8260C	1504241505	Dibromomethane	ND	ug/L	1.0	0.32		
4/24/2015	8260C	1504241505	1,1,1-Trichloroethane (TCA)	ND	ug/L	1.0	0.36		
4/24/2015	8260C	1504241505	1,2-Dichloroethane	ND	ug/L	1.0	0.36		
4/24/2015	8260C	1504241505	1,1-Dichloroethene	ND	ug/L	1.0	0.57		
4/24/2015	8260C	1504241505	1,2,3-Trichloropropane	ND	ug/L	1.0	0.70		
4/24/2015	8260C	1504241505	1,2-Dibromoethane	ND	ug/L	1.0	0.24		
4/24/2015	8260C	1504241505	1,2-Dibromo-3-chloropropane (DBCP)	ND	ug/L	2.0	0.74		
4/24/2015	8260C	1504241505	1,1-Dichloroethane (1,1-DCA)	ND	ug/L	1.0	0.20		
4/24/2015	8260C	1504241505	1,1,2-Trichloro-1,2,2-Trifluoroethane	ND	ug/L	1.0	0.31		
4/24/2015	8260C	1504241505	1,1,2-Trichloroethane	ND	ug/L	1.0	0.34		
4/24/2015	8260C	1504241505	1,1,2,2-Tetrachloroethane	ND	ug/L	1.0	0.25		
4/24/2015	8260C	1504241505	1,2-Dichloropropane	ND	ug/L	1.0	0.20		
4/24/2015	8260C	1504241505	Acrolein	ND	ug/L	10	3.0		

Analytical Results for Sampling Events at JER-2-587

Event Date	Analysis Method	Sample	Constituent	Result	Units	Quant Limit	Det Limit	Extract Efficiency	QA Flag
4/24/2015	8260C	1504241505	3-Chloro-1-propene (Allyl Chloride)	ND	ug/L	2.0	0.26		
4/24/2015	8260C	1504241505	Acetone	ND	ug/L	10	1.3		
4/24/2015	8260C	1504241505	Acetonitrile	ND	ug/L	25	4.7		
4/24/2015	8260C	1504241505	Dichlorofluoromethane (CFC 21)	ND	ug/L	1.0	0.24		
4/24/2015	8260C	1504241505	Carbon Disulfide	ND	ug/L	1.0	0.22		
4/24/2015	8260C	1504241505	Bromomethane	ND	ug/L	2.0	0.29		
4/24/2015	8260C	1504241505	Bromoform	ND	ug/L	1.0	0.42		
4/24/2015	8260C	1504241505	Bromodichloromethane	ND	ug/L	1.0	0.32		
4/24/2015	8260C	1504241505	Methyl Methacrylate	ND	ug/L	2.0	0.62		
4/24/2015	8260C	1504241505	2-Methyl-1-propanol (Isobutyl Alcohol)	ND	ug/L	100	11		
4/24/2015	8260C	1504241505	Propionitrile	ND	ug/L	5.0	3.1		
4/24/2015	8260C	1504241505	1,4-Dioxane	ND	ug/L	100	20		
4/24/2015	8260C	1504241505	1,1,1,2-Tetrachloroethane	ND	ug/L	1.0	0.22		
4/24/2015	8260C	1504241505	Tetrachloroethene (PCE)	ND	ug/L	1.0	0.30		
4/24/2015	8260C	1504241505	Ethyl Methacrylate	ND	ug/L	2.0	0.44		
4/24/2015	8260C	1504241505	trans-1,4-Dichloro-2-butene	ND	ug/L	1.0	0.70		
4/24/2015	8260C	1504241505	Styrene	ND	ug/L	1.0	0.20		
4/24/2015	8260C	1504241505	Tetrahydrofuran (THF)	ND	ug/L	5.0	0.96		
4/24/2015	8260C	1504241505	Toluene	ND	ug/L	1.0	0.20		
4/24/2015	8260C	1504241505	Trichloroethene (TCE)	ND	ug/L	1.0	0.22		
4/24/2015	8260C	1504241505	Trichlorofluoromethane (CFC 11)	ND	ug/L	1.0	0.20		
4/24/2015	8260C	1504241505	cis-1,2-Dichloroethene	ND	ug/L	1.0	0.30		
4/24/2015	8260C	1504241505	Dibromochloromethane	ND	ug/L	1.0	0.31		
4/24/2015	8260C	1504241505	m,p-Xylenes	ND	ug/L	2.0	0.33		
4/24/2015	8260C	1504241505	o-Xylene	ND	ug/L	1.0	0.20		
4/24/2015	8260C	1504241505	Vinyl Acetate	ND	ug/L	5.0	1.1		
4/24/2015	8260C	1504241505	cis-1,3-Dichloropropene	ND	ug/L	1.0	0.24		
4/24/2015	8260C	1504241505	trans-1,3-Dichloropropene	ND	ug/L	1.0	0.20		
4/24/2015	8260C	1504241505	trans-1,2-Dichloroethene	ND	ug/L	1.0	0.33		
4/24/2015	TAP 01-04	1504241506	N-Nitrodimethylamine	2.1	ng/L	0.48	0.19		
4/24/2015	TAP 01-04	1504241506	N-Nitrosodimethylamine	ND	ng/L	0.48	0.31		
4/24/2015	SW9060	1504241507	Total Organic Carbon	ND	mg/l	1	0.1611		
4/24/2015	SM 2540 C	1504241508	Total Dissolved Solids (TDS)	689	mg/L	10	5		
4/24/2015	6010C	1504241509	Vanadium, Total	0.004	mg/L	0.050	0.0005		J
4/24/2015	6020A	1504241509	Antimony, Total	ND	mg/L	0.0010	0.00003		
4/24/2015	6010C	1504241509	Magnesium, Total	56.4	mg/L	1.0	0.010		

Analytical Results for Sampling Events at JER-2-587

Event Date	Analysis Method	Sample	Constituent	Result	Units	Quant Limit	Det Limit	Extract Efficiency	QA Flag
4/24/2015	6010C	1504241509	Boron, Total	0.1	mg/L	0.20	0.03		J
4/24/2015	6010C	1504241509	Zinc, Total	ND	mg/L	0.020	0.007		
4/24/2015	6010C	1504241509	Lead, Total	ND	mg/L	0.050	0.002		
4/24/2015	6010C	1504241509	Selenium, Total	0.006	mg/L	0.010	0.005		J
4/24/2015	6010C	1504241509	Manganese, Total	0.146	mg/L	0.010	0.002		
4/24/2015	6010C	1504241509	Beryllium, Total	ND	mg/L	0.0030	0.0002		
4/24/2015	6010C	1504241509	Cadmium, Total	ND	mg/L	0.0050	0.0002		
4/24/2015	6010C	1504241509	Calcium, Total	94	mg/L	1.0	0.04		
4/24/2015	6010C	1504241509	Chromium, Total	ND	mg/L	0.010	0.0004		
4/24/2015	6010C	1504241509	Tin, Total	ND	mg/L	0.50	0.02		
4/24/2015	6010C	1504241509	Copper, Total	ND	mg/L	0.020	0.003		
4/24/2015	6010C	1504241509	Aluminum, Total	ND	mg/L	0.10	0.008		
4/24/2015	6010C	1504241509	Barium, Total	0.073	mg/L	0.020	0.0008		
4/24/2015	6010C	1504241509	Cobalt, Total	ND	mg/L	0.050	0.0006		
4/24/2015	6010C	1504241509	Strontium, Total	2.55	mg/L	0.10	0.0003		
4/24/2015	6010C	1504241509	Silver, Total	ND	mg/L	0.010	0.0006		
4/24/2015	6010C	1504241509	Potassium, Total	5.9	mg/L	2.0	0.05		
4/24/2015	6010C	1504241509	Nickel, Total	ND	mg/L	0.040	0.0010		
4/24/2015	6010C	1504241509	Molybdenum, Total	0.01	mg/L	0.025	0.0007		J
4/24/2015	6010C	1504241509	Iron, Total	ND	mg/L	0.10	0.009		
4/24/2015	7470A	1504241509	Mercury, Total	ND	mg/L	0.00020	0.00003		
4/24/2015	6010C	1504241509	Sodium, Total	58.2	mg/L	1.0	0.04		
4/24/2015	6020A	1504241509	Arsenic, Total	0.0012	mg/L	0.0010	0.0004		
4/24/2015	6020A	1504241509	Thallium, Total	0.00006	mg/L	0.0010	0.00003		J
4/24/2015	353.2	1504241510	Nitrate+Nitrite as Nitrogen	0.883	mg/L	0.050	0.002		

Analytical Results for Sampling Events at JER-2-689

Event Date	Analysis Method	Sample	Constituent	Result	Units	Quant Limit	Det Limit	Extract Efficiency	QA Flag
3/10/2015	PARAMS	1503101440Z	Conductivity	1081	µS/cm	NA	NA		
3/10/2015	PARAMS	1503101440Z	Formation Pressure	98.35	psia	NA	NA		
3/10/2015	PARAMS	1503101440Z	Turbidity	4.14	NTU	NA	NA		
3/10/2015	PARAMS	1503101440Z	Atmospheric Pressure	12.52	psia	NA	NA		
3/10/2015	PARAMS	1503101440Z	pH	8.71	NA	NA	NA		
3/10/2015	PARAMS	1503101440Z	Temperature	23.9	ºC	NA	NA		
3/10/2015	PARAMS	1503101440Z	DTW	491.21	ft	NA	NA		
3/10/2015	8260C	1503120830Z	Benzene	ND	ug/L	0.50	0.20		
3/10/2015	8260C	1503120830Z	Bromodichloromethane	ND	ug/L	0.50	0.32		
3/10/2015	8260C	1503120830Z	Bromoform	ND	ug/L	1.0	0.21		
3/10/2015	8260C	1503120830Z	Bromomethane	ND	ug/L	0.50	0.24		
3/10/2015	8260C	1503120830Z	Carbon Tetrachloride	ND	ug/L	0.50	0.45		
3/10/2015	8260C	1503120830Z	Iodomethane	ND	ug/L	5.0	0.27		
3/10/2015	8260C	1503120830Z	Chloroform	ND	ug/L	0.50	0.20		
3/10/2015	8260C	1503120830Z	Chlorobenzene	ND	ug/L	0.50	0.20		
3/10/2015	8260C	1503120830Z	Cyclohexane	ND	ug/L	1.0	0.25		
3/10/2015	8260C	1503120830Z	Dibromochloromethane	ND	ug/L	0.50	0.20		
3/10/2015	8260C	1503120830Z	Dibromomethane	ND	ug/L	0.50	0.22		
3/10/2015	8260C	1503120830Z	Methacrylonitrile	ND	ug/L	1.0	0.50		
3/10/2015	8260C	1503120830Z	Acetonitrile	ND	ug/L	25	3.7		
3/10/2015	8260C	1503120830Z	Toluene	ND	ug/L	0.50	0.20		
3/10/2015	8260C	1503120830Z	4-Methyl-2-pentanone	ND	ug/L	2.0	0.20		
3/10/2015	8260C	1503120830Z	o-Xylene	ND	ug/L	0.50	0.20		
3/10/2015	8260C	1503120830Z	Ethyl Methacrylate	ND	ug/L	0.50	0.20		
3/10/2015	8260C	1503120830Z	Methyl Methacrylate	ND	ug/L	0.50	0.39		
3/10/2015	8260C	1503120830Z	Vinyl Chloride	ND	ug/L	0.50	0.22		
3/10/2015	8260C	1503120830Z	Methyl tert-Butyl Ether	ND	ug/L	0.50	0.20		
3/10/2015	8260C	1503120830Z	Methylcyclohexane	ND	ug/L	1.0	0.27		
3/10/2015	8260C	1503120830Z	Propionitrile	ND	ug/L	2.5	1.7		
3/10/2015	8260C	1503120830Z	Styrene	ND	ug/L	0.50	0.20		
3/10/2015	8260C	1503120830Z	Vinyl Acetate	ND	ug/L	1.0	0.78		
3/10/2015	8260C	1503120830Z	Tetrahydrofuran (THF)	ND	ug/L	5.0	0.66		
3/10/2015	8260C	1503120830Z	1,2-Dichloro-1,1,2-trifluoroethane (CFC 123a)	ND	ug/L	0.50	0.20		
3/10/2015	8260C	1503120830Z	Trichloroethene (TCE)	ND	ug/L	0.50	0.20		
3/10/2015	8260C	1503120830Z	Dichlorodifluoromethane (CFC 12)	ND	ug/L	0.50	0.21		
3/10/2015	8260C	1503120830Z	cis-1,2-Dichloroethene	ND	ug/L	0.50	0.20		
3/10/2015	8260C	1503120830Z	cis-1,3-Dichloropropene	ND	ug/L	0.50	0.20		

Analytical Results for Sampling Events at JER-2-689

Event Date	Analysis Method	Sample	Constituent	Result	Units	Quant Limit	Det Limit	Extract Efficiency	QA Flag
3/10/2015	8260C	1503120830Z	m,p-Xylenes	ND	ug/L	1.0	0.26		
3/10/2015	8260C	1503120830Z	Tetrachloroethene (PCE)	ND	ug/L	0.50	0.20		
3/10/2015	8260C	1503120830Z	Chloromethane	ND	ug/L	0.50	0.20		
3/10/2015	8260C	1503120830Z	Ethylbenzene	ND	ug/L	0.50	0.20		
3/10/2015	8260C	1503120830Z	1,2-Dibromo-3-chloropropane (DBCP)	ND	ug/L	1.0	0.74		
3/10/2015	8260C	1503120830Z	3-Chloro-1-propene (Allyl Chloride)	ND	ug/L	0.50	0.25		
3/10/2015	8260C	1503120830Z	Dichlorofluoromethane (CFC 21)	ND	ug/L	0.50	0.20		
3/10/2015	8260C	1503120830Z	Dichloromethane	ND	ug/L	0.50	0.20		
3/10/2015	8260C	1503120830Z	2-Propanol	ND	ug/L	40	8.6		
3/10/2015	8260C	1503120830Z	1,2-Dibromoethane	ND	ug/L	0.50	0.24		
3/10/2015	8260C	1503120830Z	1,2-Dichloroethane	ND	ug/L	0.50	0.20		
3/10/2015	8260C	1503120830Z	1,2-Dichloropropane	ND	ug/L	0.50	0.20		
3/10/2015	8260C	1503120830Z	2,2-Dichloro-1,1,1-trifluoroethane (CFC 123)	ND	ug/L	0.50	0.32		
3/10/2015	8260C	1503120830Z	2-Chloro-1,3-butadiene	ND	ug/L	0.50	0.22		
3/10/2015	8260C	1503120830Z	2-Hexanone	ND	ug/L	5.0	0.73		
3/10/2015	8260C	1503120830Z	1,2,3-Trichloropropane	ND	ug/L	0.50	0.32		
3/10/2015	8260C	1503120830Z	Acrolein	ND	ug/L	5.0	3.0		
3/10/2015	8260C	1503120830Z	1,4-Dioxane	ND	ug/L	40	18		
3/10/2015	8260C	1503120830Z	trans-1,4-Dichloro-2-butene	ND	ug/L	0.52	0.52		
3/10/2015	8260C	1503120830Z	trans-1,2-Dichloroethene	ND	ug/L	0.50	0.20		
3/10/2015	8260C	1503120830Z	Chloroethane	ND	ug/L	0.50	0.22		
3/10/2015	8260C	1503120830Z	Trichlorofluoromethane (CFC 11)	ND	ug/L	0.50	0.20		
3/10/2015	8260C	1503120830Z	trans-1,3-Dichloropropene	ND	ug/L	0.50	0.20		
3/10/2015	8260C	1503120830Z	Acetone	ND	ug/L	5.0	1.3		
3/10/2015	8260C	1503120830Z	Carbon Disulfide	ND	ug/L	0.50	0.20		
3/10/2015	8260C	1503120830Z	2-Methyl-1-propanol (Isobutyl Alcohol)	ND	ug/L	100	8.1		
3/10/2015	8260C	1503120830Z	1,1-Dichloroethane (1,1-DCA)	ND	ug/L	0.50	0.20		
3/10/2015	8260C	1503120830Z	2-Butanone (MEK)	ND	ug/L	5.0	0.81		
3/10/2015	8260C	1503120830Z	1,1-Dichloroethene	ND	ug/L	0.50	0.28		
3/10/2015	8260C	1503120830Z	1,1,1,2-Tetrachloroethane	ND	ug/L	0.50	0.20		
3/10/2015	8260C	1503120830Z	1,1,2-Trichloro-1,2,2-Trifluoroethane	ND	ug/L	0.50	0.31		
3/10/2015	8260C	1503120830Z	1,1,1-Trichloroethane (TCA)	ND	ug/L	0.50	0.36		
3/10/2015	8260C	1503120830Z	Acrylonitrile	ND	ug/L	2.5	0.78		
3/10/2015	8260C	1503120830Z	1,1,2,2-Tetrachloroethane	ND	ug/L	0.50	0.20		
3/10/2015	8260C	1503120830Z	1,1,2-Trichloroethane	ND	ug/L	0.50	0.23		
3/10/2015	8260C	1503120831Z	2,2-Dichloro-1,1,1-trifluoroethane (CFC 123)	ND	ug/L	1.0	0.32		
3/10/2015	8260C	1503120831Z	1,1,2-Trichloro-1,2,2-Trifluoroethane	ND	ug/L	1.0	0.31		

Analytical Results for Sampling Events at JER-2-689

Event Date	Analysis Method	Sample	Constituent	Result	Units	Quant Limit	Det Limit	Extract Efficiency	QA Flag
3/10/2015	8260C	1503120831Z	Vinyl Chloride	ND	ug/L	1.0	0.32		
3/10/2015	8260C	1503120831Z	Vinyl Acetate	ND	ug/L	5.0	1.1		
3/10/2015	8260C	1503120831Z	Trichloroethene (TCE)	ND	ug/L	1.0	0.22		
3/10/2015	8260C	1503120831Z	Tetrahydrofuran (THF)	ND	ug/L	5.0	0.96		
3/10/2015	8260C	1503120831Z	Tetrachloroethene (PCE)	ND	ug/L	1.0	0.30		
3/10/2015	8260C	1503120831Z	m,p-Xylenes	ND	ug/L	2.0	0.33		
3/10/2015	8260C	1503120831Z	1,2,3-Trichloropropane	ND	ug/L	1.0	0.70		
3/10/2015	8260C	1503120831Z	Chlorobenzene	ND	ug/L	1.0	0.29		
3/10/2015	8260C	1503120831Z	Trichlorofluoromethane (CFC 11)	ND	ug/L	1.0	0.20		
3/10/2015	8260C	1503120831Z	Toluene	ND	ug/L	1.0	0.20		
3/10/2015	8260C	1503120831Z	1,4-Dioxane	ND	ug/L	100	20		
3/10/2015	8260C	1503120831Z	1,2-Dichloropropane	ND	ug/L	1.0	0.20		
3/10/2015	8260C	1503120831Z	1,2-Dichloroethane	ND	ug/L	1.0	0.36		
3/10/2015	8260C	1503120831Z	2-Butanone (MEK)	ND	ug/L	5.0	0.81		
3/10/2015	8260C	1503120831Z	1,2-Dibromo-3-chloropropane (DBCP)	ND	ug/L	2.0	0.74		
3/10/2015	8260C	1503120831Z	2-Chloro-1,3-butadiene	ND	ug/L	1.0	0.27		
3/10/2015	8260C	1503120831Z	1,1-Dichloroethane (1,1-DCA)	ND	ug/L	1.0	0.20		
3/10/2015	8260C	1503120831Z	1,1,2-Trichloroethane	ND	ug/L	1.0	0.34		
3/10/2015	8260C	1503120831Z	Propionitrile	ND	ug/L	5.0	3.1		
3/10/2015	8260C	1503120831Z	Chloroethane	ND	ug/L	2.0	0.24		
3/10/2015	8260C	1503120831Z	1,1-Dichloroethene	ND	ug/L	1.0	0.57		
3/10/2015	8260C	1503120831Z	Chloromethane	ND	ug/L	2.0	0.21		
3/10/2015	8260C	1503120831Z	Dichlorodifluoromethane (CFC 12)	ND	ug/L	1.0	0.46		
3/10/2015	8260C	1503120831Z	Methyl Methacrylate	ND	ug/L	2.0	0.62		
3/10/2015	8260C	1503120831Z	Iodomethane	ND	ug/L	5.0	0.98		
3/10/2015	8260C	1503120831Z	Ethylbenzene	ND	ug/L	1.0	0.20		
3/10/2015	8260C	1503120831Z	Ethyl Methacrylate	ND	ug/L	2.0	0.44		
3/10/2015	8260C	1503120831Z	Methacrylonitrile	ND	ug/L	5.0	0.50		
3/10/2015	8260C	1503120831Z	Dichlorofluoromethane (CFC 21)	ND	ug/L	1.0	0.24		
3/10/2015	8260C	1503120831Z	1,1,2,2-Tetrachloroethane	ND	ug/L	1.0	0.25		
3/10/2015	8260C	1503120831Z	Dibromomethane	ND	ug/L	1.0	0.32		
3/10/2015	8260C	1503120831Z	Styrene	ND	ug/L	1.0	0.20		
3/10/2015	8260C	1503120831Z	Cyclohexane	ND	ug/L	10	0.25		
3/10/2015	8260C	1503120831Z	cis-1,3-Dichloropropene	ND	ug/L	1.0	0.24		
3/10/2015	8260C	1503120831Z	Chloroform	ND	ug/L	1.0	0.25		
3/10/2015	8260C	1503120831Z	Dichloromethane	ND	ug/L	1.0	0.60		
3/10/2015	8260C	1503120831Z	cis-1,2-Dichloroethene	ND	ug/L	1.0	0.30		
3/10/2015	8260C	1503120831Z	1,2-Dichloro-1,1,2-trifluoroethane (CFC 123a)	ND	ug/L	1.0	0.21		

Analytical Results for Sampling Events at JER-2-689

Event Date	Analysis Method	Sample	Constituent	Result	Units	Quant Limit	Det Limit	Extract Efficiency	QA Flag
3/10/2015	8260C	1503120831Z	trans-1,4-Dichloro-2-butene	ND	ug/L	1.0	0.70		
3/10/2015	8260C	1503120831Z	trans-1,3-Dichloropropene	ND	ug/L	1.0	0.20		
3/10/2015	8260C	1503120831Z	trans-1,2-Dichloroethene	ND	ug/L	1.0	0.33		
3/10/2015	8260C	1503120831Z	o-Xylene	ND	ug/L	1.0	0.20		
3/10/2015	8260C	1503120831Z	Methylcyclohexane	ND	ug/L	10	0.27		
3/10/2015	8260C	1503120831Z	Dibromochloromethane	ND	ug/L	1.0	0.31		
3/10/2015	8260C	1503120831Z	2-Hexanone	ND	ug/L	5.0	1.7		
3/10/2015	8260C	1503120831Z	Methyl tert-Butyl Ether	ND	ug/L	10	0.29		
3/10/2015	8260C	1503120831Z	Benzene	ND	ug/L	1.0	0.20		
3/10/2015	8260C	1503120831Z	2-Methyl-1-propanol (Isobutyl Alcohol)	ND	ug/L	100	11		
3/10/2015	8260C	1503120831Z	2-Propanol	ND	ug/L	50	8.6		
3/10/2015	8260C	1503120831Z	3-Chloro-1-propene (Allyl Chloride)	ND	ug/L	2.0	0.26		
3/10/2015	8260C	1503120831Z	4-Methyl-2-pentanone	ND	ug/L	5.0	0.67		
3/10/2015	8260C	1503120831Z	Acetone	ND	ug/L	10	1.3		
3/10/2015	8260C	1503120831Z	Acetonitrile	ND	ug/L	25	4.7		
3/10/2015	8260C	1503120831Z	Acrylonitrile	ND	ug/L	5.0	1.4		
3/10/2015	8260C	1503120831Z	1,2-Dibromoethane	ND	ug/L	1.0	0.24		
3/10/2015	8260C	1503120831Z	Bromodichloromethane	ND	ug/L	1.0	0.32		
3/10/2015	8260C	1503120831Z	Bromoform	ND	ug/L	1.0	0.42		
3/10/2015	8260C	1503120831Z	1,1,1-Trichloroethane (TCA)	ND	ug/L	1.0	0.36		
3/10/2015	8260C	1503120831Z	Bromomethane	ND	ug/L	2.0	0.29		
3/10/2015	8260C	1503120831Z	Carbon Disulfide	ND	ug/L	1.0	0.22		
3/10/2015	8260C	1503120831Z	Carbon Tetrachloride	ND	ug/L	1.0	0.45		
3/10/2015	8260C	1503120831Z	Acrolein	ND	ug/L	10	3.0		
3/10/2015	8260C	1503120831Z	1,1,1,2-Tetrachloroethane	ND	ug/L	1.0	0.22		
3/10/2015	TAP 01-04	1503120832Z	N-Nitrodimethylamine	ND	ug/L	0.01	0.0052	83	
3/10/2015	TAP 01-04	1503120832Z	Bromacil	ND	ug/L	0.01	0.0052	88	
3/10/2015	TAP 01-04	1503120832Z	N-Nitrosodimethylamine	ND	ug/L	0.01	0.0052	82	
3/10/2015	TAP 01-04	1503120833Z	N-Nitrodimethylamine	ND	ng/L	0.00094	0.00047		
3/10/2015	TAP 01-04	1503120833Z	N-Nitrosodimethylamine	0.54	ng/L	0.00094	0.00047		
3/10/2015	6010C	1503120915Z	Barium, Total	0.065	mg/L	0.020	0.004		
3/10/2015	6010C	1503120915Z	Lead, Total	ND	mg/L	0.050	0.002		
3/10/2015	6010C	1503120915Z	Iron, Total	ND	mg/L	0.10	0.02		
3/10/2015	6010C	1503120915Z	Copper, Total	0.007	mg/L	0.020	0.004		J
3/10/2015	6020A	1503120915Z	Antimony, Total	ND	mg/L	0.0010	0.0004		
3/10/2015	6010C	1503120915Z	Cobalt, Total	ND	mg/L	0.050	0.002		

Analytical Results for Sampling Events at JER-2-689

Event Date	Analysis Method	Sample	Constituent	Result	Units	Quant Limit	Det Limit	Extract Efficiency	QA Flag
3/10/2015	6010C	1503120915Z	Chromium, Total	ND	mg/L	0.010	0.0009		
3/10/2015	6010C	1503120915Z	Calcium, Total	86.9	mg/L	1.0	0.2		
3/10/2015	6010C	1503120915Z	Cadmium, Total	ND	mg/L	0.0050	0.0005		
3/10/2015	6010C	1503120915Z	Beryllium, Total	ND	mg/L	0.0030	0.0002		
3/10/2015	6020A	1503120915Z	Arsenic, Total	0.0005	mg/L	0.0010	0.0004		J
3/10/2015	6010C	1503120915Z	Molybdenum, Total	0.01	mg/L	0.025	0.002		J
3/10/2015	6010C	1503120915Z	Aluminum, Total	ND	mg/L	0.10	0.03		
3/10/2015	6010C	1503120915Z	Manganese, Total	0.007	mg/L	0.010	0.002		J
3/10/2015	6010C	1503120915Z	Selenium, Total	0.003	mg/L	0.010	0.003		J
3/10/2015	6010C	1503120915Z	Boron, Total	0.18	mg/L	0.20	0.03		J RB
3/10/2015	6010C	1503120915Z	Nickel, Total	ND	mg/L	0.040	0.002		
3/10/2015	6010C	1503120915Z	Potassium, Total	6.1	mg/L	2.0	0.2		
3/10/2015	6010C	1503120915Z	Silver, Total	ND	mg/L	0.010	0.0009		
3/10/2015	7470A	1503120915Z	Mercury, Total	ND	mg/L	0.00020	0.00003		
3/10/2015	6010C	1503120915Z	Strontium, Total	2.65	mg/L	0.10	0.002		
3/10/2015	6020A	1503120915Z	Thallium, Total	0.0002	mg/L	0.0010	0.00006		J
3/10/2015	6010C	1503120915Z	Sodium, Total	57.8	mg/L	1.0	0.09		
3/10/2015	6010C	1503120915Z	Tin, Total	ND	mg/L	0.50	0.05		
3/10/2015	6010C	1503120915Z	Vanadium, Total	0.003	mg/L	0.050	0.0007		J
3/10/2015	6010C	1503120915Z	Zinc, Total	0.032	mg/L	0.020	0.005		
3/10/2015	6010C	1503120915Z	Magnesium, Total	52.6	mg/L	1.0	0.02		
3/10/2015	SW9060	1503120916Z	Total Organic Carbon	ND	mg/l	1	0.1611		
3/10/2015	SM 2540 C	1503120917Z	Total Dissolved Solids (TDS)	716	mg/L	10	5		
3/10/2015	353.2	1503120918Z	Nitrate+Nitrite as Nitrogen	1.28	mg/L	0.050	0.002		
3/10/2015	PARAMS	1503120919Z	pH	8.53	NA	NA	NA		
3/10/2015	PARAMS	1503120919Z	Turbidity	1.72	NTU	NA	NA		
3/10/2015	PARAMS	1503120919Z	DTW	491.50	ft	NA	NA		
3/10/2015	PARAMS	1503120919Z	Temperature	22.1	ºC	NA	NA		
3/10/2015	PARAMS	1503120919Z	Conductivity	1095	µS/cm	NA	NA		
3/10/2015	PARAMS	1503120919Z	Atmospheric Pressure	12.55	psia	NA	NA		
4/18/2015	PARAMS	1504180921	pH	8.01	NA	NA	NA		
4/18/2015	PARAMS	1504180921	Turbidity	1.68	NTU	NA	NA		
4/18/2015	PARAMS	1504180921	Temperature	22.55	ºC	NA	NA		
4/18/2015	PARAMS	1504180921	Conductivity	986	µS/cm	NA	NA		
4/18/2015	8260C	1504180922	1,1,2-Trichloro-1,2,2-Trifluoroethane	0.57	ug/L	1.0	0.31		J

Analytical Results for Sampling Events at JER-2-689

Event Date	Analysis Method	Sample	Constituent	Result	Units	Quant Limit	Det Limit	Extract Efficiency	QA Flag
4/18/2015	8260C	1504180922	2-Chloro-1,3-butadiene	ND	ug/L	1.0	0.27		
4/18/2015	8260C	1504180922	trans-1,2-Dichloroethene	ND	ug/L	1.0	0.33		
4/18/2015	8260C	1504180922	trans-1,3-Dichloropropene	ND	ug/L	1.0	0.20		
4/18/2015	8260C	1504180922	trans-1,4-Dichloro-2-butene	ND	ug/L	1.0	0.70		
4/18/2015	8260C	1504180922	Tetrahydrofuran (THF)	ND	ug/L	5.0	0.96		
4/18/2015	8260C	1504180922	1,2,3-Trichloropropane	ND	ug/L	1.0	0.70		
4/18/2015	8260C	1504180922	1,2-Dichloropropane	ND	ug/L	1.0	0.20		
4/18/2015	8260C	1504180922	Dichloromethane	ND	ug/L	1.0	0.60		
4/18/2015	8260C	1504180922	1,1,1-Trichloroethane (TCA)	ND	ug/L	1.0	0.36		
4/18/2015	8260C	1504180922	1,1,2-Trichloroethane	ND	ug/L	1.0	0.34		
4/18/2015	8260C	1504180922	2-Hexanone	ND	ug/L	5.0	1.7		
4/18/2015	8260C	1504180922	1,1-Dichloroethene	ND	ug/L	1.0	0.57		
4/18/2015	8260C	1504180922	1,2-Dibromo-3-chloropropane (DBCP)	ND	ug/L	2.0	0.74		
4/18/2015	8260C	1504180922	2-Butanone (MEK)	ND	ug/L	5.0	0.81		
4/18/2015	8260C	1504180922	2,2-Dichloro-1,1,1-trifluoroethane (CFC 123)	ND	ug/L	1.0	0.32		
4/18/2015	8260C	1504180922	1,4-Dioxane	ND	ug/L	100	20		
4/18/2015	8260C	1504180922	1,1,1,2-Tetrachloroethane	ND	ug/L	1.0	0.22		
4/18/2015	8260C	1504180922	1,2-Dichloroethane	ND	ug/L	1.0	0.36		
4/18/2015	8260C	1504180922	1,1,2,2-Tetrachloroethane	ND	ug/L	1.0	0.25		
4/18/2015	8260C	1504180922	cis-1,2-Dichloroethene	ND	ug/L	1.0	0.30		
4/18/2015	8260C	1504180922	3-Chloro-1-propene (Allyl Chloride)	ND	ug/L	2.0	0.26		
4/18/2015	8260C	1504180922	Vinyl Acetate	ND	ug/L	5.0	1.1		
4/18/2015	8260C	1504180922	Methyl tert-Butyl Ether	ND	ug/L	10	0.29		
4/18/2015	8260C	1504180922	4-Methyl-2-pentanone	ND	ug/L	5.0	0.67		
4/18/2015	8260C	1504180922	1,1-Dichloroethane (1,1-DCA)	ND	ug/L	1.0	0.20		
4/18/2015	8260C	1504180922	Acetonitrile	ND	ug/L	25	4.7		
4/18/2015	8260C	1504180922	Acrolein	ND	ug/L	10	3.0		
4/18/2015	8260C	1504180922	Methylcyclohexane	ND	ug/L	10	0.27		
4/18/2015	8260C	1504180922	Propionitrile	ND	ug/L	5.0	3.1		
4/18/2015	8260C	1504180922	Dichlorofluoromethane (CFC 21)	ND	ug/L	1.0	0.24		
4/18/2015	8260C	1504180922	Tetrachloroethene (PCE)	ND	ug/L	1.0	0.30		
4/18/2015	8260C	1504180922	o-Xylene	ND	ug/L	1.0	0.20		
4/18/2015	8260C	1504180922	Toluene	ND	ug/L	1.0	0.20		
4/18/2015	8260C	1504180922	1,2-Dichloro-1,1,2-trifluoroethane (CFC 123a)	ND	ug/L	1.0	0.21		
4/18/2015	8260C	1504180922	Trichlorofluoromethane (CFC 11)	ND	ug/L	1.0	0.20		
4/18/2015	8260C	1504180922	Acrylonitrile	ND	ug/L	5.0	1.4		
4/18/2015	8260C	1504180922	1,2-Dibromoethane	ND	ug/L	1.0	0.24		
4/18/2015	8260C	1504180922	Vinyl Chloride	ND	ug/L	1.0	0.32		

Analytical Results for Sampling Events at JER-2-689

Event Date	Analysis Method	Sample	Constituent	Result	Units	Quant Limit	Det Limit	Extract Efficiency	QA Flag
4/18/2015	8260C	1504180922	2-Methyl-1-propanol (Isobutyl Alcohol)	ND	ug/L	100	11		
4/18/2015	8260C	1504180922	cis-1,3-Dichloropropene	ND	ug/L	1.0	0.24		
4/18/2015	8260C	1504180922	m,p-Xylenes	ND	ug/L	2.0	0.33		
4/18/2015	8260C	1504180922	Styrene	ND	ug/L	1.0	0.20		
4/18/2015	8260C	1504180922	Cyclohexane	ND	ug/L	10	0.25		
4/18/2015	8260C	1504180922	Acetone	ND	ug/L	10	1.3		
4/18/2015	8260C	1504180922	2-Propanol	ND	ug/L	50	8.6		
4/18/2015	8260C	1504180922	Benzene	ND	ug/L	1.0	0.20		
4/18/2015	8260C	1504180922	Bromodichloromethane	ND	ug/L	1.0	0.32		
4/18/2015	8260C	1504180922	Ethyl Methacrylate	ND	ug/L	2.0	0.44		
4/18/2015	8260C	1504180922	Bromoform	ND	ug/L	1.0	0.42		
4/18/2015	8260C	1504180922	Carbon Disulfide	ND	ug/L	1.0	0.22		
4/18/2015	8260C	1504180922	Carbon Tetrachloride	ND	ug/L	1.0	0.45		
4/18/2015	8260C	1504180922	Chlorobenzene	ND	ug/L	1.0	0.29		
4/18/2015	8260C	1504180922	Chloroethane	ND	ug/L	2.0	0.24		
4/18/2015	8260C	1504180922	Trichloroethene (TCE)	2.4	ug/L	1.0	0.22		
4/18/2015	8260C	1504180922	Chloromethane	ND	ug/L	2.0	0.21		
4/18/2015	8260C	1504180922	Dichlorodifluoromethane (CFC 12)	ND	ug/L	1.0	0.46		
4/18/2015	8260C	1504180922	Bromomethane	ND	ug/L	2.0	0.29		
4/18/2015	8260C	1504180922	Methyl Methacrylate	ND	ug/L	2.0	0.62		
4/18/2015	8260C	1504180922	Methacrylonitrile	ND	ug/L	5.0	0.50		
4/18/2015	8260C	1504180922	Chloroform	ND	ug/L	1.0	0.25		
4/18/2015	8260C	1504180922	Ethylbenzene	ND	ug/L	1.0	0.20		
4/18/2015	8260C	1504180922	Dibromomethane	ND	ug/L	1.0	0.32		
4/18/2015	8260C	1504180922	Dibromochloromethane	ND	ug/L	1.0	0.31		
4/18/2015	8260C	1504180922	Iodomethane	ND	ug/L	5.0	0.98		
4/18/2015	TAP 01-04	1504180924	N-Nitrosodimethylamine	0.43	ng/L	0.49	0.32		J TB
4/18/2015	TAP 01-04	1504180924	N-Nitrodimethylamine	ND	ng/L	0.49	0.19		
4/18/2015	SW9060	1504180926	Total Organic Carbon	1	mg/l	1	0.1611		
4/18/2015	SM 2540 C	1504180927	Total Dissolved Solids (TDS)	730	mg/L	10	5		
4/18/2015	6010C	1504180928	Copper, Total	0.014	mg/L	0.020	0.003		J
4/18/2015	6020A	1504180928	Arsenic, Total	ND	mg/L	0.0010	0.0004		
4/18/2015	6010C	1504180928	Selenium, Total	0.01	mg/L	0.010	0.005		
4/18/2015	6020A	1504180928	Antimony, Total	0.0006	mg/L	0.0010	0.00003		J RB
4/18/2015	6010C	1504180928	Strontium, Total	2.39	mg/L	0.10	0.0003		
4/18/2015	6010C	1504180928	Sodium, Total	51.5	mg/L	1.0	0.04		

Analytical Results for Sampling Events at JER-2-689

Event Date	Analysis Method	Sample	Constituent	Result	Units	Quant Limit	Det Limit	Extract Efficiency	QA Flag
4/18/2015	6010C	1504180928	Silver, Total	ND	mg/L	0.010	0.0006		
4/18/2015	6010C	1504180928	Calcium, Total	87.2	mg/L	1.0	0.04		
4/18/2015	6010C	1504180928	Cadmium, Total	0.0005	mg/L	0.0050	0.0002		J
4/18/2015	6010C	1504180928	Boron, Total	0.08	mg/L	0.20	0.03		J
4/18/2015	6010C	1504180928	Nickel, Total	0.004	mg/L	0.040	0.0010		J RB
4/18/2015	6010C	1504180928	Tin, Total	ND	mg/L	0.50	0.02		
4/18/2015	6010C	1504180928	Vanadium, Total	0.003	mg/L	0.050	0.0005		J
4/18/2015	6010C	1504180928	Barium, Total	0.062	mg/L	0.020	0.0008		
4/18/2015	6010C	1504180928	Lead, Total	ND	mg/L	0.050	0.002		
4/18/2015	6010C	1504180928	Beryllium, Total	ND	mg/L	0.0030	0.0002		
4/18/2015	6010C	1504180928	Iron, Total	0.02	mg/L	0.10	0.009		J RB
4/18/2015	6010C	1504180928	Zinc, Total	1.62	mg/L	0.020	0.007		
4/18/2015	6010C	1504180928	Potassium, Total	5.1	mg/L	2.0	0.05		
4/18/2015	6010C	1504180928	Chromium, Total	0.003	mg/L	0.010	0.0004		J
4/18/2015	6010C	1504180928	Cobalt, Total	ND	mg/L	0.050	0.0006		
4/18/2015	6010C	1504180928	Molybdenum, Total	0.01	mg/L	0.025	0.0007		J
4/18/2015	7470A	1504180928	Mercury, Total	ND	mg/L	0.00020	0.00003		
4/18/2015	6010C	1504180928	Manganese, Total	0.049	mg/L	0.010	0.002		
4/18/2015	6010C	1504180928	Aluminum, Total	ND	mg/L	0.10	0.008		
4/18/2015	6020A	1504180928	Thallium, Total	0.0001	mg/L	0.0010	0.00003		J
4/18/2015	6010C	1504180928	Magnesium, Total	53.1	mg/L	1.0	0.010		
4/18/2015	353.2	1504180929	Nitrate+Nitrite as Nitrogen	1.04	mg/L	0.050	0.002		
4/18/2015	PARAMS	1504180951	Turbidity	2.81	NTU	NA	NA		
4/18/2015	PARAMS	1504180951	Conductivity	986	µS/cm	NA	NA		
4/18/2015	PARAMS	1504180951	pH	8.00	NA	NA	NA		
4/18/2015	PARAMS	1504180951	Temperature	23.83	ºC	NA	NA		
4/18/2015	8260C	1504180955	2-Hexanone	ND	ug/L	5.0	1.7		
4/18/2015	8260C	1504180955	1,2-Dichloropropane	ND	ug/L	1.0	0.20		
4/18/2015	8260C	1504180955	2,2-Dichloro-1,1,1-trifluoroethane (CFC 123)	ND	ug/L	1.0	0.32		
4/18/2015	8260C	1504180955	2-Chloro-1,3-butadiene	ND	ug/L	1.0	0.27		
4/18/2015	8260C	1504180955	Ethyl Methacrylate	ND	ug/L	2.0	0.44		
4/18/2015	8260C	1504180955	1,1-Dichloroethane (1,1-DCA)	ND	ug/L	1.0	0.20		
4/18/2015	8260C	1504180955	Cyclohexane	ND	ug/L	10	0.25		
4/18/2015	8260C	1504180955	1,2-Dichloro-1,1,2-trifluoroethane (CFC 123a)	ND	ug/L	1.0	0.21		
4/18/2015	8260C	1504180955	1,1,1,2-Tetrachloroethane	ND	ug/L	1.0	0.22		
4/18/2015	8260C	1504180955	1,2-Dibromoethane	ND	ug/L	1.0	0.24		

Analytical Results for Sampling Events at JER-2-689

Event Date	Analysis Method	Sample	Constituent	Result	Units	Quant Limit	Det Limit	Extract Efficiency	QA Flag
4/18/2015	8260C	1504180955	1,1,2,2-Tetrachloroethane	ND	ug/L	1.0	0.25		
4/18/2015	8260C	1504180955	trans-1,3-Dichloropropene	ND	ug/L	1.0	0.20		
4/18/2015	8260C	1504180955	1,1,2-Trichloro-1,2,2-Trifluoroethane	0.34	ug/L	1.0	0.31		J
4/18/2015	8260C	1504180955	trans-1,2-Dichloroethene	ND	ug/L	1.0	0.33		
4/18/2015	8260C	1504180955	1,1-Dichloroethene	ND	ug/L	1.0	0.57		
4/18/2015	8260C	1504180955	Carbon Tetrachloride	ND	ug/L	1.0	0.45		
4/18/2015	8260C	1504180955	1,2-Dibromo-3-chloropropane (DBCP)	ND	ug/L	2.0	0.74		
4/18/2015	8260C	1504180955	1,1,1-Trichloroethane (TCA)	ND	ug/L	1.0	0.36		
4/18/2015	8260C	1504180955	Trichloroethene (TCE)	1.2	ug/L	1.0	0.22		
4/18/2015	8260C	1504180955	Methyl Methacrylate	ND	ug/L	2.0	0.62		
4/18/2015	8260C	1504180955	Bromoform	ND	ug/L	1.0	0.42		
4/18/2015	8260C	1504180955	Acrolein	ND	ug/L	10	3.0		
4/18/2015	8260C	1504180955	2-Methyl-1-propanol (Isobutyl Alcohol)	ND	ug/L	100	11		
4/18/2015	8260C	1504180955	2-Propanol	ND	ug/L	50	8.6		
4/18/2015	8260C	1504180955	3-Chloro-1-propene (Allyl Chloride)	ND	ug/L	2.0	0.26		
4/18/2015	8260C	1504180955	1,2-Dichloroethane	ND	ug/L	1.0	0.36		
4/18/2015	8260C	1504180955	Acetone	ND	ug/L	10	1.3		
4/18/2015	8260C	1504180955	trans-1,4-Dichloro-2-butene	ND	ug/L	1.0	0.70		
4/18/2015	8260C	1504180955	Acetonitrile	ND	ug/L	25	4.7		
4/18/2015	8260C	1504180955	Propionitrile	ND	ug/L	5.0	3.1		
4/18/2015	8260C	1504180955	Acrylonitrile	ND	ug/L	5.0	1.4		
4/18/2015	8260C	1504180955	Benzene	ND	ug/L	1.0	0.20		
4/18/2015	8260C	1504180955	Bromodichloromethane	ND	ug/L	1.0	0.32		
4/18/2015	8260C	1504180955	4-Methyl-2-pentanone	ND	ug/L	5.0	0.67		
4/18/2015	8260C	1504180955	1,1,2-Trichloroethane	ND	ug/L	1.0	0.34		
4/18/2015	8260C	1504180955	o-Xylene	ND	ug/L	1.0	0.20		
4/18/2015	8260C	1504180955	1,2,3-Trichloropropane	ND	ug/L	1.0	0.70		
4/18/2015	8260C	1504180955	Methacrylonitrile	ND	ug/L	5.0	0.50		
4/18/2015	8260C	1504180955	Methyl tert-Butyl Ether	ND	ug/L	10	0.29		
4/18/2015	8260C	1504180955	Carbon Disulfide	ND	ug/L	1.0	0.22		
4/18/2015	8260C	1504180955	1,4-Dioxane	ND	ug/L	100	20		
4/18/2015	8260C	1504180955	Chlorobenzene	ND	ug/L	1.0	0.29		
4/18/2015	8260C	1504180955	Chloroethane	ND	ug/L	2.0	0.24		
4/18/2015	8260C	1504180955	Tetrahydrofuran (THF)	ND	ug/L	5.0	0.96		
4/18/2015	8260C	1504180955	Chloromethane	ND	ug/L	2.0	0.21		
4/18/2015	8260C	1504180955	cis-1,3-Dichloropropene	ND	ug/L	1.0	0.24		
4/18/2015	8260C	1504180955	Dibromochloromethane	ND	ug/L	1.0	0.31		
4/18/2015	8260C	1504180955	Iodomethane	ND	ug/L	5.0	0.98		

Analytical Results for Sampling Events at JER-2-689

Event Date	Analysis Method	Sample	Constituent	Result	Units	Quant Limit	Det Limit	Extract Efficiency	QA Flag
4/18/2015	8260C	1504180955	Dichlorodifluoromethane (CFC 12)	ND	ug/L	1.0	0.46		
4/18/2015	8260C	1504180955	Dichlorofluoromethane (CFC 21)	ND	ug/L	1.0	0.24		
4/18/2015	8260C	1504180955	Dichloromethane	ND	ug/L	1.0	0.60		
4/18/2015	8260C	1504180955	m,p-Xylenes	ND	ug/L	2.0	0.33		
4/18/2015	8260C	1504180955	Chloroform	ND	ug/L	1.0	0.25		
4/18/2015	8260C	1504180955	Toluene	ND	ug/L	1.0	0.20		
4/18/2015	8260C	1504180955	cis-1,2-Dichloroethene	ND	ug/L	1.0	0.30		
4/18/2015	8260C	1504180955	Vinyl Chloride	ND	ug/L	1.0	0.32		
4/18/2015	8260C	1504180955	Vinyl Acetate	ND	ug/L	5.0	1.1		
4/18/2015	8260C	1504180955	Trichlorofluoromethane (CFC 11)	ND	ug/L	1.0	0.20		
4/18/2015	8260C	1504180955	Ethylbenzene	ND	ug/L	1.0	0.20		
4/18/2015	8260C	1504180955	2-Butanone (MEK)	ND	ug/L	5.0	0.81		
4/18/2015	8260C	1504180955	Methylcyclohexane	ND	ug/L	10	0.27		
4/18/2015	8260C	1504180955	Styrene	ND	ug/L	1.0	0.20		
4/18/2015	8260C	1504180955	Dibromomethane	ND	ug/L	1.0	0.32		
4/18/2015	8260C	1504180955	Tetrachloroethene (PCE)	ND	ug/L	1.0	0.30		
4/18/2015	8260C	1504180955	Bromomethane	ND	ug/L	2.0	0.29		
4/18/2015	TAP 01-04	1504180956	N-Nitrodimethylamine	ND	ng/L	0.48	0.19		
4/18/2015	TAP 01-04	1504180956	N-Nitrosodimethylamine	ND	ng/L	0.48	0.31		
4/18/2015	SW9060	1504180957	Total Organic Carbon	0.67	mg/l	1	0.1611		
4/18/2015	SM 2540 C	1504180958	Total Dissolved Solids (TDS)	716	mg/L	10	5		
4/18/2015	6010C	1504180959	Vanadium, Total	0.003	mg/L	0.050	0.0005		J
4/18/2015	6010C	1504180959	Manganese, Total	0.047	mg/L	0.010	0.002		
4/18/2015	6020A	1504180959	Thallium, Total	0.0001	mg/L	0.0010	0.00003		J
4/18/2015	6010C	1504180959	Boron, Total	0.08	mg/L	0.20	0.03		J
4/18/2015	6010C	1504180959	Potassium, Total	5.3	mg/L	2.0	0.05		
4/18/2015	6010C	1504180959	Nickel, Total	0.005	mg/L	0.040	0.0010		J RB
4/18/2015	7470A	1504180959	Mercury, Total	ND	mg/L	0.00020	0.00003		
4/18/2015	6010C	1504180959	Magnesium, Total	54.4	mg/L	1.0	0.010		
4/18/2015	6010C	1504180959	Lead, Total	ND	mg/L	0.050	0.002		
4/18/2015	6010C	1504180959	Iron, Total	0.07	mg/L	0.10	0.009		J RB
4/18/2015	6010C	1504180959	Copper, Total	0.014	mg/L	0.020	0.003		J
4/18/2015	6010C	1504180959	Cobalt, Total	ND	mg/L	0.050	0.0006		
4/18/2015	6010C	1504180959	Chromium, Total	0.005	mg/L	0.010	0.0004		J
4/18/2015	6010C	1504180959	Calcium, Total	89.1	mg/L	1.0	0.04		
4/18/2015	6010C	1504180959	Silver, Total	ND	mg/L	0.010	0.0006		

Analytical Results for Sampling Events at JER-2-689

Event Date	Analysis Method	Sample	Constituent	Result	Units	Quant Limit	Det Limit	Extract Efficiency	QA Flag
4/18/2015	6010C	1504180959	Beryllium, Total	ND	mg/L	0.0030	0.0002		
4/18/2015	6010C	1504180959	Aluminum, Total	ND	mg/L	0.10	0.008		
4/18/2015	6010C	1504180959	Zinc, Total	1.59	mg/L	0.020	0.007		
4/18/2015	6010C	1504180959	Selenium, Total	0.009	mg/L	0.010	0.005		J
4/18/2015	6010C	1504180959	Tin, Total	ND	mg/L	0.50	0.02		
4/18/2015	6010C	1504180959	Strontium, Total	2.46	mg/L	0.10	0.0003		
4/18/2015	6010C	1504180959	Sodium, Total	52.9	mg/L	1.0	0.04		
4/18/2015	6010C	1504180959	Molybdenum, Total	0.01	mg/L	0.025	0.0007		J
4/18/2015	6020A	1504180959	Antimony, Total	0.0006	mg/L	0.0010	0.00003		J RB
4/18/2015	6020A	1504180959	Arsenic, Total	0.0006	mg/L	0.0010	0.0004		J
4/18/2015	6010C	1504180959	Barium, Total	0.063	mg/L	0.020	0.0008		
4/18/2015	6010C	1504180959	Cadmium, Total	0.0006	mg/L	0.0050	0.0002		J
4/18/2015	353.2	1504181000	Nitrate+Nitrite as Nitrogen	1.02	mg/L	0.050	0.002		
4/18/2015	PARAMS	1504210810	pH	7.65	NA	NA	NA		
4/18/2015	PARAMS	1504210810	Turbidity		NTU	NA	NA		
4/18/2015	PARAMS	1504210810	Temperature	21.39	ºC	NA	NA		
4/18/2015	PARAMS	1504210810	Conductivity	982	µS/cm	NA	NA		
4/18/2015	8260C	1504210811	m,p-Xylenes	ND	ug/L	2.0	0.33		
4/18/2015	8260C	1504210811	Cyclohexane	ND	ug/L	10	0.25		
4/18/2015	8260C	1504210811	Dibromochloromethane	ND	ug/L	1.0	0.31		
4/18/2015	8260C	1504210811	Bromodichloromethane	ND	ug/L	1.0	0.32		
4/18/2015	8260C	1504210811	1,2,3-Trichloropropane	ND	ug/L	1.0	0.70		
4/18/2015	8260C	1504210811	trans-1,4-Dichloro-2-butene	ND	ug/L	1.0	0.70		
4/18/2015	8260C	1504210811	trans-1,3-Dichloropropene	ND	ug/L	1.0	0.20		
4/18/2015	8260C	1504210811	o-Xylene	ND	ug/L	1.0	0.20		
4/18/2015	8260C	1504210811	cis-1,3-Dichloropropene	ND	ug/L	1.0	0.24		
4/18/2015	8260C	1504210811	1,1,2-Trichloro-1,2,2-Trifluoroethane	0.61	ug/L	1.0	0.31		J
4/18/2015	8260C	1504210811	1,2-Dibromo-3-chloropropane (DBCP)	ND	ug/L	2.0	0.74		
4/18/2015	8260C	1504210811	1,1-Dichloroethene	ND	ug/L	1.0	0.57		
4/18/2015	8260C	1504210811	Chloromethane	ND	ug/L	2.0	0.21		
4/18/2015	8260C	1504210811	trans-1,2-Dichloroethene	ND	ug/L	1.0	0.33		
4/18/2015	8260C	1504210811	Acrylonitrile	ND	ug/L	5.0	1.4		
4/18/2015	8260C	1504210811	1,4-Dioxane	ND	ug/L	100	20		
4/18/2015	8260C	1504210811	2-Methyl-1-propanol (Isobutyl Alcohol)	ND	ug/L	100	11		
4/18/2015	8260C	1504210811	Bromomethane	ND	ug/L	2.0	0.29		
4/18/2015	8260C	1504210811	1,2-Dibromoethane	ND	ug/L	1.0	0.24		

Analytical Results for Sampling Events at JER-2-689

Event Date	Analysis Method	Sample	Constituent	Result	Units	Quant Limit	Det Limit	Extract Efficiency	QA Flag
4/18/2015	8260C	1504210811	4-Methyl-2-pentanone	ND	ug/L	5.0	0.67		
4/18/2015	8260C	1504210811	Acetone	ND	ug/L	10	1.3		
4/18/2015	8260C	1504210811	3-Chloro-1-propene (Allyl Chloride)	ND	ug/L	2.0	0.26		
4/18/2015	8260C	1504210811	Acrolein	ND	ug/L	10	3.0		
4/18/2015	8260C	1504210811	Chloroform	ND	ug/L	1.0	0.25		
4/18/2015	8260C	1504210811	Benzene	ND	ug/L	1.0	0.20		
4/18/2015	8260C	1504210811	Dibromomethane	ND	ug/L	1.0	0.32		
4/18/2015	8260C	1504210811	2-Butanone (MEK)	ND	ug/L	5.0	0.81		
4/18/2015	8260C	1504210811	2-Hexanone	ND	ug/L	5.0	1.7		
4/18/2015	8260C	1504210811	Carbon Tetrachloride	ND	ug/L	1.0	0.45		
4/18/2015	8260C	1504210811	Chlorobenzene	ND	ug/L	1.0	0.29		
4/18/2015	8260C	1504210811	Chloroethane	ND	ug/L	2.0	0.24		
4/18/2015	8260C	1504210811	Acetonitrile	ND	ug/L	25	4.7		
4/18/2015	8260C	1504210811	Trichloroethene (TCE)	3.2	ug/L	1.0	0.22		
4/18/2015	8260C	1504210811	Methacrylonitrile	ND	ug/L	5.0	0.50		
4/18/2015	8260C	1504210811	Methyl Methacrylate	ND	ug/L	2.0	0.62		
4/18/2015	8260C	1504210811	Methylcyclohexane	ND	ug/L	10	0.27		
4/18/2015	8260C	1504210811	Bromoform	ND	ug/L	1.0	0.42		
4/18/2015	8260C	1504210811	Styrene	ND	ug/L	1.0	0.20		
4/18/2015	8260C	1504210811	Tetrachloroethene (PCE)	ND	ug/L	1.0	0.30		
4/18/2015	8260C	1504210811	Iodomethane	ND	ug/L	5.0	0.98		
4/18/2015	8260C	1504210811	Toluene	0.4	ug/L	1.0	0.20		J
4/18/2015	8260C	1504210811	cis-1,2-Dichloroethene	ND	ug/L	1.0	0.30		
4/18/2015	8260C	1504210811	Trichlorofluoromethane (CFC 11)	ND	ug/L	1.0	0.20		
4/18/2015	8260C	1504210811	Vinyl Acetate	ND	ug/L	5.0	1.1		
4/18/2015	8260C	1504210811	Vinyl Chloride	ND	ug/L	1.0	0.32		
4/18/2015	8260C	1504210811	Dichlorofluoromethane (CFC 21)	ND	ug/L	1.0	0.24		
4/18/2015	8260C	1504210811	1,2-Dichloroethane	ND	ug/L	1.0	0.36		
4/18/2015	8260C	1504210811	2-Propanol	ND	ug/L	50	8.6		
4/18/2015	8260C	1504210811	Tetrahydrofuran (THF)	ND	ug/L	5.0	0.96		
4/18/2015	8260C	1504210811	1,1,1,2-Tetrachloroethane	ND	ug/L	1.0	0.22		
4/18/2015	8260C	1504210811	2,2-Dichloro-1,1,1-trifluoroethane (CFC 123)	ND	ug/L	1.0	0.32		
4/18/2015	8260C	1504210811	Ethylbenzene	ND	ug/L	1.0	0.20		
4/18/2015	8260C	1504210811	2-Chloro-1,3-butadiene	ND	ug/L	1.0	0.27		
4/18/2015	8260C	1504210811	Carbon Disulfide	ND	ug/L	1.0	0.22		
4/18/2015	8260C	1504210811	1,1-Dichloroethane (1,1-DCA)	ND	ug/L	1.0	0.20		
4/18/2015	8260C	1504210811	Propionitrile	ND	ug/L	5.0	3.1		
4/18/2015	8260C	1504210811	1,2-Dichloropropane	ND	ug/L	1.0	0.20		

Analytical Results for Sampling Events at JER-2-689

Event Date	Analysis Method	Sample	Constituent	Result	Units	Quant Limit	Det Limit	Extract Efficiency	QA Flag
4/18/2015	8260C	1504210811	1,2-Dichloro-1,1,2-trifluoroethane (CFC 123a)	ND	ug/L	1.0	0.21		
4/18/2015	8260C	1504210811	Methyl tert-Butyl Ether	ND	ug/L	10	0.29		
4/18/2015	8260C	1504210811	1,1,1-Trichloroethane (TCA)	ND	ug/L	1.0	0.36		
4/18/2015	8260C	1504210811	1,1,2,2-Tetrachloroethane	ND	ug/L	1.0	0.25		
4/18/2015	8260C	1504210811	1,1,2-Trichloroethane	ND	ug/L	1.0	0.34		
4/18/2015	8260C	1504210811	Dichloromethane	ND	ug/L	1.0	0.60		
4/18/2015	8260C	1504210811	Ethyl Methacrylate	ND	ug/L	2.0	0.44		
4/18/2015	8260C	1504210811	Dichlorodifluoromethane (CFC 12)	ND	ug/L	1.0	0.46		
4/18/2015	TAP 01-04	1504210812	N-Nitrosodimethylamine	4.9	ng/L	0.48	0.31		
4/18/2015	TAP 01-04	1504210812	N-Nitrodimethylamine	ND	ng/L	0.48	0.19		
4/18/2015	SW9060	1504210813	Total Organic Carbon	0.69	mg/l	1	0.1611		
4/18/2015	SM 2540 C	1504210814	Total Dissolved Solids (TDS)	717	mg/L	10	5		
4/18/2015	6010C	1504210815	Lead, Total	ND	mg/L	0.050	0.002		
4/18/2015	6010C	1504210815	Strontium, Total	2.79	mg/L	0.10	0.0003		
4/18/2015	6010C	1504210815	Sodium, Total	60	mg/L	1.0	0.04		
4/18/2015	6010C	1504210815	Silver, Total	ND	mg/L	0.010	0.0006		
4/18/2015	6010C	1504210815	Selenium, Total	0.008	mg/L	0.010	0.005		J
4/18/2015	6020A	1504210815	Antimony, Total	0.0001	mg/L	0.0010	0.00003		J RB
4/18/2015	6010C	1504210815	Chromium, Total	ND	mg/L	0.010	0.0004		
4/18/2015	6010C	1504210815	Boron, Total	0.06	mg/L	0.20	0.03		J
4/18/2015	6010C	1504210815	Barium, Total	0.066	mg/L	0.020	0.0008		
4/18/2015	6010C	1504210815	Beryllium, Total	ND	mg/L	0.0030	0.0002		
4/18/2015	6010C	1504210815	Cadmium, Total	0.0005	mg/L	0.0050	0.0002		J
4/18/2015	6010C	1504210815	Iron, Total	ND	mg/L	0.10	0.009		
4/18/2015	6010C	1504210815	Calcium, Total	88.8	mg/L	1.0	0.04		
4/18/2015	6010C	1504210815	Potassium, Total	6.1	mg/L	2.0	0.05		
4/18/2015	6010C	1504210815	Copper, Total	0.006	mg/L	0.020	0.003		J
4/18/2015	6010C	1504210815	Cobalt, Total	ND	mg/L	0.050	0.0006		
4/18/2015	6010C	1504210815	Magnesium, Total	54	mg/L	1.0	0.010		
4/18/2015	6010C	1504210815	Manganese, Total	0.014	mg/L	0.010	0.002		
4/18/2015	7470A	1504210815	Mercury, Total	ND	mg/L	0.00020	0.00003		
4/18/2015	6010C	1504210815	Molybdenum, Total	0.01	mg/L	0.025	0.0007		J
4/18/2015	6010C	1504210815	Aluminum, Total	ND	mg/L	0.10	0.008		
4/18/2015	6010C	1504210815	Vanadium, Total	0.004	mg/L	0.050	0.0005		J
4/18/2015	6010C	1504210815	Zinc, Total	0.255	mg/L	0.020	0.007		
4/18/2015	6020A	1504210815	Thallium, Total	0.0001	mg/L	0.0010	0.00003		J

Analytical Results for Sampling Events at JER-2-689

Event Date	Analysis Method	Sample	Constituent	Result	Units	Quant Limit	Det Limit	Extract Efficiency	QA Flag
4/18/2015	6020A	1504210815	Arsenic, Total	ND	mg/L	0.0010	0.0004		
4/18/2015	6010C	1504210815	Tin, Total	ND	mg/L	0.50	0.02		
4/18/2015	6010C	1504210815	Nickel, Total	0.002	mg/L	0.040	0.0010		J
4/18/2015	353.2	1504210816	Nitrate+Nitrite as Nitrogen	0.72	mg/L	0.050	0.002		
4/18/2015	PARAMS	1504221325	Turbidity	1.57	NTU	NA	NA		
4/18/2015	PARAMS	1504221325	Temperature	22.96	ºC	NA	NA		
4/18/2015	PARAMS	1504221325	Conductivity	991	µS/cm	NA	NA		
4/18/2015	PARAMS	1504221325	pH	7.54	NA	NA	NA		
4/18/2015	8260C	1504221330	1,1,2-Trichloroethane	ND	ug/L	1.0	0.34		
4/18/2015	8260C	1504221330	4-Methyl-2-pentanone	ND	ug/L	5.0	0.67		
4/18/2015	8260C	1504221330	Vinyl Acetate	ND	ug/L	5.0	1.1		
4/18/2015	8260C	1504221330	2,2-Dichloro-1,1,1-trifluoroethane (CFC 123)	ND	ug/L	1.0	0.32		
4/18/2015	8260C	1504221330	2-Butanone (MEK)	ND	ug/L	5.0	0.81		
4/18/2015	8260C	1504221330	2-Chloro-1,3-butadiene	ND	ug/L	1.0	0.27		
4/18/2015	8260C	1504221330	2-Hexanone	ND	ug/L	5.0	1.7		
4/18/2015	8260C	1504221330	1,4-Dioxane	ND	ug/L	100	20		
4/18/2015	8260C	1504221330	1,2-Dibromo-3-chloropropane (DBCP)	ND	ug/L	2.0	0.74		
4/18/2015	8260C	1504221330	Bromodichloromethane	ND	ug/L	1.0	0.32		
4/18/2015	8260C	1504221330	3-Chloro-1-propene (Allyl Chloride)	ND	ug/L	2.0	0.26		
4/18/2015	8260C	1504221330	Acetone	ND	ug/L	10	1.3		
4/18/2015	8260C	1504221330	Acetonitrile	ND	ug/L	25	4.7		
4/18/2015	8260C	1504221330	Acrolein	ND	ug/L	10	3.0		
4/18/2015	8260C	1504221330	Acrylonitrile	ND	ug/L	5.0	1.4		
4/18/2015	8260C	1504221330	Benzene	ND	ug/L	1.0	0.20		
4/18/2015	8260C	1504221330	2-Methyl-1-propanol (Isobutyl Alcohol)	ND	ug/L	100	11		
4/18/2015	8260C	1504221330	2-Propanol	ND	ug/L	50	8.6		
4/18/2015	8260C	1504221330	Chloroform	ND	ug/L	1.0	0.25		
4/18/2015	8260C	1504221330	Chloromethane	ND	ug/L	2.0	0.21		
4/18/2015	8260C	1504221330	Bromomethane	ND	ug/L	2.0	0.29		
4/18/2015	8260C	1504221330	Carbon Disulfide	ND	ug/L	1.0	0.22		
4/18/2015	8260C	1504221330	Carbon Tetrachloride	ND	ug/L	1.0	0.45		
4/18/2015	8260C	1504221330	Chlorobenzene	ND	ug/L	1.0	0.29		
4/18/2015	8260C	1504221330	1,2-Dibromoethane	ND	ug/L	1.0	0.24		
4/18/2015	8260C	1504221330	1,2-Dichloropropane	ND	ug/L	1.0	0.20		
4/18/2015	8260C	1504221330	1,2-Dichloroethane	ND	ug/L	1.0	0.36		
4/18/2015	8260C	1504221330	Methacrylonitrile	ND	ug/L	5.0	0.50		

Analytical Results for Sampling Events at JER-2-689

Event Date	Analysis Method	Sample	Constituent	Result	Units	Quant Limit	Det Limit	Extract Efficiency	QA Flag
4/18/2015	8260C	1504221330	Cyclohexane	ND	ug/L	10	0.25		
4/18/2015	8260C	1504221330	Dibromochloromethane	ND	ug/L	1.0	0.31		
4/18/2015	8260C	1504221330	Dibromomethane	ND	ug/L	1.0	0.32		
4/18/2015	8260C	1504221330	Dichlorodifluoromethane (CFC 12)	ND	ug/L	1.0	0.46		
4/18/2015	8260C	1504221330	Bromoform	ND	ug/L	1.0	0.42		
4/18/2015	8260C	1504221330	1,1-Dichloroethane (1,1-DCA)	ND	ug/L	1.0	0.20		
4/18/2015	8260C	1504221330	Chloroethane	ND	ug/L	2.0	0.24		
4/18/2015	8260C	1504221330	o-Xylene	ND	ug/L	1.0	0.20		
4/18/2015	8260C	1504221330	1,1-Dichloroethene	ND	ug/L	1.0	0.57		
4/18/2015	8260C	1504221330	1,2,3-Trichloropropane	ND	ug/L	1.0	0.70		
4/18/2015	8260C	1504221330	Dichlorofluoromethane (CFC 21)	ND	ug/L	1.0	0.24		
4/18/2015	8260C	1504221330	Dichloromethane	ND	ug/L	1.0	0.60		
4/18/2015	8260C	1504221330	Ethyl Methacrylate	ND	ug/L	2.0	0.44		
4/18/2015	8260C	1504221330	1,1,2-Trichloro-1,2,2-Trifluoroethane	ND	ug/L	1.0	0.31		
4/18/2015	8260C	1504221330	1,1,2,2-Tetrachloroethane	ND	ug/L	1.0	0.25		
4/18/2015	8260C	1504221330	1,1,1-Trichloroethane (TCA)	ND	ug/L	1.0	0.36		
4/18/2015	8260C	1504221330	1,1,1,2-Tetrachloroethane	ND	ug/L	1.0	0.22		
4/18/2015	8260C	1504221330	1,2-Dichloro-1,1,2-trifluoroethane (CFC 123a)	ND	ug/L	1.0	0.21		
4/18/2015	8260C	1504221330	trans-1,4-Dichloro-2-butene	ND	ug/L	1.0	0.70		
4/18/2015	8260C	1504221330	cis-1,2-Dichloroethene	ND	ug/L	1.0	0.30		
4/18/2015	8260C	1504221330	trans-1,2-Dichloroethene	ND	ug/L	1.0	0.33		
4/18/2015	8260C	1504221330	Iodomethane	ND	ug/L	5.0	0.98		
4/18/2015	8260C	1504221330	Tetrachloroethene (PCE)	ND	ug/L	1.0	0.30		
4/18/2015	8260C	1504221330	Methyl Methacrylate	ND	ug/L	2.0	0.62		
4/18/2015	8260C	1504221330	Methyl tert-Butyl Ether	ND	ug/L	10	0.29		
4/18/2015	8260C	1504221330	Methylcyclohexane	ND	ug/L	10	0.27		
4/18/2015	8260C	1504221330	trans-1,3-Dichloropropene	ND	ug/L	1.0	0.20		
4/18/2015	8260C	1504221330	Styrene	ND	ug/L	1.0	0.20		
4/18/2015	8260C	1504221330	m,p-Xylenes	ND	ug/L	2.0	0.33		
4/18/2015	8260C	1504221330	Tetrahydrofuran (THF)	ND	ug/L	5.0	0.96		
4/18/2015	8260C	1504221330	Toluene	ND	ug/L	1.0	0.20		
4/18/2015	8260C	1504221330	Trichloroethene (TCE)	1	ug/L	1.0	0.22		
4/18/2015	8260C	1504221330	Trichlorofluoromethane (CFC 11)	ND	ug/L	1.0	0.20		
4/18/2015	8260C	1504221330	Ethylbenzene	ND	ug/L	1.0	0.20		
4/18/2015	8260C	1504221330	Vinyl Chloride	ND	ug/L	1.0	0.32		
4/18/2015	8260C	1504221330	Propionitrile	ND	ug/L	5.0	3.1		
4/18/2015	8260C	1504221330	cis-1,3-Dichloropropene	ND	ug/L	1.0	0.24		

Analytical Results for Sampling Events at JER-2-689

Event Date	Analysis Method	Sample	Constituent	Result	Units	Quant Limit	Det Limit	Extract Efficiency	QA Flag
4/18/2015	TAP 01-04	1504221331	N-Nitrosodimethylamine	12	ng/L	0.48	0.31		
4/18/2015	TAP 01-04	1504221331	N-Nitrodimethylamine	ND	ng/L	0.48	0.19		
4/18/2015	SW9060	1504221332	Total Organic Carbon	1.2	mg/l	1	0.1611		
4/18/2015	SM 2540 C	1504221333	Total Dissolved Solids (TDS)	726	mg/L	10	5		
4/18/2015	6010C	1504221334	Calcium, Total	83.7	mg/L	1.0	0.04		
4/18/2015	6010C	1504221334	Vanadium, Total	0.003	mg/L	0.050	0.0005		J
4/18/2015	6020A	1504221334	Arsenic, Total	0.0005	mg/L	0.0010	0.0004		J
4/18/2015	6010C	1504221334	Copper, Total	ND	mg/L	0.020	0.003		
4/18/2015	6010C	1504221334	Cobalt, Total	ND	mg/L	0.050	0.0006		
4/18/2015	6010C	1504221334	Chromium, Total	ND	mg/L	0.010	0.0004		
4/18/2015	6010C	1504221334	Manganese, Total	0.038	mg/L	0.010	0.002		
4/18/2015	6010C	1504221334	Nickel, Total	ND	mg/L	0.040	0.0010		
4/18/2015	6010C	1504221334	Barium, Total	0.063	mg/L	0.020	0.0008		
4/18/2015	6010C	1504221334	Magnesium, Total	51.3	mg/L	1.0	0.010		
4/18/2015	6010C	1504221334	Lead, Total	ND	mg/L	0.050	0.002		
4/18/2015	6010C	1504221334	Iron, Total	ND	mg/L	0.10	0.009		
4/18/2015	6010C	1504221334	Aluminum, Total	0.03	mg/L	0.10	0.008		J RB
4/18/2015	6010C	1504221334	Tin, Total	ND	mg/L	0.50	0.02		
4/18/2015	6020A	1504221334	Antimony, Total	0.00006	mg/L	0.0010	0.00003		J RB
4/18/2015	7470A	1504221334	Mercury, Total	ND	mg/L	0.00020	0.00003		
4/18/2015	6010C	1504221334	Potassium, Total	5.9	mg/L	2.0	0.05		
4/18/2015	6010C	1504221334	Zinc, Total	0.048	mg/L	0.020	0.007		
4/18/2015	6010C	1504221334	Boron, Total	0.06	mg/L	0.20	0.03		J
4/18/2015	6010C	1504221334	Cadmium, Total	0.0004	mg/L	0.0050	0.0002		J
4/18/2015	6010C	1504221334	Selenium, Total	0.007	mg/L	0.010	0.005		J
4/18/2015	6010C	1504221334	Silver, Total	ND	mg/L	0.010	0.0006		
4/18/2015	6010C	1504221334	Sodium, Total	60.8	mg/L	1.0	0.04		
4/18/2015	6010C	1504221334	Strontium, Total	2.63	mg/L	0.10	0.0003		
4/18/2015	6020A	1504221334	Thallium, Total	0.00007	mg/L	0.0010	0.00003		J
4/18/2015	6010C	1504221334	Beryllium, Total	ND	mg/L	0.0030	0.0002		
4/18/2015	6010C	1504221334	Molybdenum, Total	0.01	mg/L	0.025	0.0007		J
4/18/2015	353.2	1504221335	Nitrate+Nitrite as Nitrogen	0.747	mg/L	0.050	0.002		
4/18/2015	PARAMS	1504231020	Turbidity	1.80	NTU	NA	NA		
4/18/2015	PARAMS	1504231020	pH	7.14	NA	NA	NA		
4/18/2015	PARAMS	1504231020	Temperature	25.61	ºC	NA	NA		

Analytical Results for Sampling Events at JER-2-689

Event Date	Analysis Method	Sample	Constituent	Result	Units	Quant Limit	Det Limit	Extract Efficiency	QA Flag
4/18/2015	PARAMS	1504231020	Conductivity	998	µS/cm	NA	NA		
4/18/2015	8260C	1504231025	Methylcyclohexane	ND	ug/L	10	0.27		
4/18/2015	8260C	1504231025	Vinyl Chloride	0.93	ug/L	1.0	0.32		J
4/18/2015	8260C	1504231025	Chloroethane	ND	ug/L	2.0	0.24		
4/18/2015	8260C	1504231025	Dichloromethane	ND	ug/L	1.0	0.60		
4/18/2015	8260C	1504231025	Dichlorodifluoromethane (CFC 12)	ND	ug/L	1.0	0.46		
4/18/2015	8260C	1504231025	Dibromomethane	ND	ug/L	1.0	0.32		
4/18/2015	8260C	1504231025	Dibromochloromethane	ND	ug/L	1.0	0.31		
4/18/2015	8260C	1504231025	Cyclohexane	ND	ug/L	10	0.25		
4/18/2015	8260C	1504231025	Methyl Methacrylate	ND	ug/L	2.0	0.62		
4/18/2015	8260C	1504231025	o-Xylene	ND	ug/L	1.0	0.20		
4/18/2015	8260C	1504231025	4-Methyl-2-pentanone	ND	ug/L	5.0	0.67		
4/18/2015	8260C	1504231025	2-Propanol	ND	ug/L	50	8.6		
4/18/2015	8260C	1504231025	Vinyl Acetate	ND	ug/L	5.0	1.1		
4/18/2015	8260C	1504231025	Methacrylonitrile	ND	ug/L	5.0	0.50		
4/18/2015	8260C	1504231025	cis-1,2-Dichloroethene	ND	ug/L	1.0	0.30		
4/18/2015	8260C	1504231025	Toluene	ND	ug/L	1.0	0.20		
4/18/2015	8260C	1504231025	m,p-Xylenes	ND	ug/L	2.0	0.33		
4/18/2015	8260C	1504231025	Tetrahydrofuran (THF)	ND	ug/L	5.0	0.96		
4/18/2015	8260C	1504231025	trans-1,2-Dichloroethene	ND	ug/L	1.0	0.33		
4/18/2015	8260C	1504231025	trans-1,3-Dichloropropene	ND	ug/L	1.0	0.20		
4/18/2015	8260C	1504231025	trans-1,4-Dichloro-2-butene	ND	ug/L	1.0	0.70		
4/18/2015	8260C	1504231025	1,2-Dichloro-1,1,2-trifluoroethane (CFC 123a)	ND	ug/L	1.0	0.21		
4/18/2015	8260C	1504231025	Unknown	7.1	ug/L	NA	NA		TIC
4/18/2015	8260C	1504231025	2-Chloro-1,3-butadiene	ND	ug/L	1.0	0.27		
4/18/2015	8260C	1504231025	Trichlorofluoromethane (CFC 11)	ND	ug/L	1.0	0.20		
4/18/2015	8260C	1504231025	Acrylonitrile	ND	ug/L	5.0	1.4		
4/18/2015	8260C	1504231025	1,2,3-Trichloropropane	ND	ug/L	1.0	0.70		
4/18/2015	8260C	1504231025	Bromodichloromethane	ND	ug/L	1.0	0.32		
4/18/2015	8260C	1504231025	3-Chloro-1-propene (Allyl Chloride)	ND	ug/L	2.0	0.26		
4/18/2015	8260C	1504231025	Chlorobenzene	ND	ug/L	1.0	0.29		
4/18/2015	8260C	1504231025	Carbon Tetrachloride	ND	ug/L	1.0	0.45		
4/18/2015	8260C	1504231025	Carbon Disulfide	ND	ug/L	1.0	0.22		
4/18/2015	8260C	1504231025	Bromomethane	0.3	ug/L	2.0	0.29		J
4/18/2015	8260C	1504231025	Chloroform	ND	ug/L	1.0	0.25		
4/18/2015	8260C	1504231025	Bromoform	ND	ug/L	1.0	0.42		
4/18/2015	8260C	1504231025	Ethylbenzene	ND	ug/L	1.0	0.20		

Analytical Results for Sampling Events at JER-2-689

Event Date	Analysis Method	Sample	Constituent	Result	Units	Quant Limit	Det Limit	Extract Efficiency	QA Flag
4/18/2015	8260C	1504231025	Benzene	ND	ug/L	1.0	0.20		
4/18/2015	8260C	1504231025	2-Methyl-1-propanol (Isobutyl Alcohol)	ND	ug/L	100	11		
4/18/2015	8260C	1504231025	Acrolein	ND	ug/L	10	3.0		
4/18/2015	8260C	1504231025	Acetonitrile	ND	ug/L	25	4.7		
4/18/2015	8260C	1504231025	Acetone	ND	ug/L	10	1.3		
4/18/2015	8260C	1504231025	1,2-Dibromoethane	ND	ug/L	1.0	0.24		
4/18/2015	8260C	1504231025	Ethyl Methacrylate	ND	ug/L	2.0	0.44		
4/18/2015	8260C	1504231025	Iodomethane	ND	ug/L	5.0	0.98		
4/18/2015	8260C	1504231025	Tetrachloroethene (PCE)	ND	ug/L	1.0	0.30		
4/18/2015	8260C	1504231025	Styrene	ND	ug/L	1.0	0.20		
4/18/2015	8260C	1504231025	Propionitrile	ND	ug/L	5.0	3.1		
4/18/2015	8260C	1504231025	Methyl tert-Butyl Ether	ND	ug/L	10	0.29		
4/18/2015	8260C	1504231025	Chloromethane	ND	ug/L	2.0	0.21		
4/18/2015	8260C	1504231025	1,1,2-Trichloro-1,2,2-Trifluoroethane	ND	ug/L	1.0	0.31		
4/18/2015	8260C	1504231025	1,1,2-Trichloroethane	ND	ug/L	1.0	0.34		
4/18/2015	8260C	1504231025	2,2-Dichloro-1,1,1-trifluoroethane (CFC 123)	ND	ug/L	1.0	0.32		
4/18/2015	8260C	1504231025	1,4-Dioxane	ND	ug/L	100	20		
4/18/2015	8260C	1504231025	1,2-Dichloropropane	ND	ug/L	1.0	0.20		
4/18/2015	8260C	1504231025	1,2-Dichloroethane	ND	ug/L	1.0	0.36		
4/18/2015	8260C	1504231025	1,2-Dibromo-3-chloropropane (DBCP)	ND	ug/L	2.0	0.74		
4/18/2015	8260C	1504231025	1,1-Dichloroethane (1,1-DCA)	ND	ug/L	1.0	0.20		
4/18/2015	8260C	1504231025	2-Butanone (MEK)	ND	ug/L	5.0	0.81		
4/18/2015	8260C	1504231025	Dichlorofluoromethane (CFC 21)	ND	ug/L	1.0	0.24		
4/18/2015	8260C	1504231025	Trichloroethene (TCE)	0.41	ug/L	1.0	0.22		J
4/18/2015	8260C	1504231025	1,1,2,2-Tetrachloroethane	ND	ug/L	1.0	0.25		
4/18/2015	8260C	1504231025	1,1,1-Trichloroethane (TCA)	ND	ug/L	1.0	0.36		
4/18/2015	8260C	1504231025	1,1,1,2-Tetrachloroethane	ND	ug/L	1.0	0.22		
4/18/2015	8260C	1504231025	2-Hexanone	ND	ug/L	5.0	1.7		
4/18/2015	8260C	1504231025	cis-1,3-Dichloropropene	ND	ug/L	1.0	0.24		
4/18/2015	8260C	1504231025	1,1-Dichloroethene	ND	ug/L	1.0	0.57		
4/18/2015	TAP 01-04	1504231026	N-Nitrodimethylamine	0.38	ng/L	0.48	0.19		J
4/18/2015	TAP 01-04	1504231026	N-Nitrosodimethylamine	15	ng/L	0.48	0.31		
4/18/2015	SW9060	1504231027	Total Organic Carbon	0.84	mg/l	1	0.1611		
4/18/2015	SM 2540 C	1504231028	Total Dissolved Solids (TDS)	707	mg/L	10	5		
4/18/2015	6010C	1504231029	Magnesium, Total	55.4	mg/L	1.0	0.010		
4/18/2015	6010C	1504231029	Iron, Total	ND	mg/L	0.10	0.009		

Analytical Results for Sampling Events at JER-2-689

Event Date	Analysis Method	Sample	Constituent	Result	Units	Quant Limit	Det Limit	Extract Efficiency	QA Flag
4/18/2015	6010C	1504231029	Aluminum, Total	ND	mg/L	0.10	0.008		
4/18/2015	6020A	1504231029	Antimony, Total	0.0003	mg/L	0.0010	0.00003		J RB
4/18/2015	6020A	1504231029	Arsenic, Total	0.0007	mg/L	0.0010	0.0004		J
4/18/2015	6010C	1504231029	Barium, Total	0.07	mg/L	0.020	0.0008		
4/18/2015	6010C	1504231029	Beryllium, Total	ND	mg/L	0.0030	0.0002		
4/18/2015	6010C	1504231029	Cadmium, Total	ND	mg/L	0.0050	0.0002		
4/18/2015	6010C	1504231029	Calcium, Total	92.3	mg/L	1.0	0.04		
4/18/2015	6010C	1504231029	Molybdenum, Total	0.01	mg/L	0.025	0.0007		J
4/18/2015	6010C	1504231029	Chromium, Total	ND	mg/L	0.010	0.0004		
4/18/2015	6010C	1504231029	Cobalt, Total	ND	mg/L	0.050	0.0006		
4/18/2015	6010C	1504231029	Copper, Total	ND	mg/L	0.020	0.003		
4/18/2015	6010C	1504231029	Boron, Total	0.1	mg/L	0.20	0.03		J
4/18/2015	6010C	1504231029	Manganese, Total	0.068	mg/L	0.010	0.002		
4/18/2015	6010C	1504231029	Zinc, Total	0.028	mg/L	0.020	0.007		
4/18/2015	6010C	1504231029	Vanadium, Total	0.003	mg/L	0.050	0.0005		J
4/18/2015	6010C	1504231029	Tin, Total	ND	mg/L	0.50	0.02		
4/18/2015	6020A	1504231029	Thallium, Total	0.00009	mg/L	0.0010	0.00003		J
4/18/2015	6010C	1504231029	Strontium, Total	2.75	mg/L	0.10	0.0003		
4/18/2015	6010C	1504231029	Sodium, Total	65	mg/L	1.0	0.04		
4/18/2015	6010C	1504231029	Silver, Total	ND	mg/L	0.010	0.0006		
4/18/2015	6010C	1504231029	Selenium, Total	ND	mg/L	0.010	0.005		
4/18/2015	6010C	1504231029	Nickel, Total	ND	mg/L	0.040	0.0010		
4/18/2015	7470A	1504231029	Mercury, Total	ND	mg/L	0.00020	0.00003		
4/18/2015	6010C	1504231029	Lead, Total	ND	mg/L	0.050	0.002		
4/18/2015	6010C	1504231029	Potassium, Total	6.1	mg/L	2.0	0.05		
4/18/2015	353.2	1504231030	Nitrate+Nitrite as Nitrogen	0.623	mg/L	0.050	0.002		