Hubble:
Carina Nebula

Active Radiation Shielding Utilizing High Temperature Superconductors

Shayne Westover, PI – NASA JSC
R.B. Meinke - Advanced Magnets Lab, Inc
R. Battiston – INFN, University of Perugia, Italy
S. Van Sciver – Florida State University
Robert Singleterry – LaRC

NIAC Symposium, March 27-29, 2012

NIAC Proposal

- Radiation exposure from energetic solar protons and Galactic Cosmic Radiation is a substantial risk for exploration beyond the confines of the Earth's geomagnetic field
- The concept of shielding astronauts with magnetic/electric fields has been studied for over 40 years and has remained an intractable engineering problem
- Superconducting magnet technology has made great strides in the last decade
- Coupling maturing technology with potential innovative magnet configurations, this proposal aims to revisit the concept of active magnetic shielding

- **The focus of the proposed work**
  - **Analyze new coil configurations with maturing technology**
  - **Compare shielding performance and design mass with alternate passive shielding methods**
  - **Consider concept of operations and evaluate risk and risk mitigation approaches**

Radiation hazards

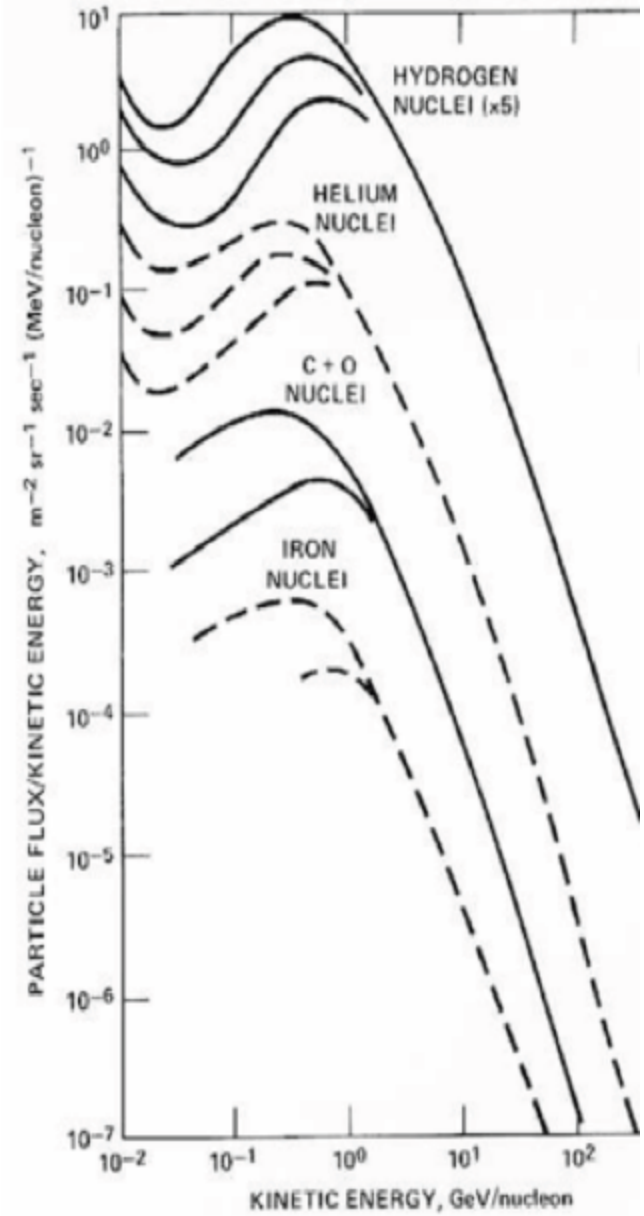

Common GCR species on the left graph. Note the solar effects on the lower energy particles, hence the multiple curves per species. The GCR/SPE graph below shows the energy differences. *(Physics Today, Oct. 1974)*

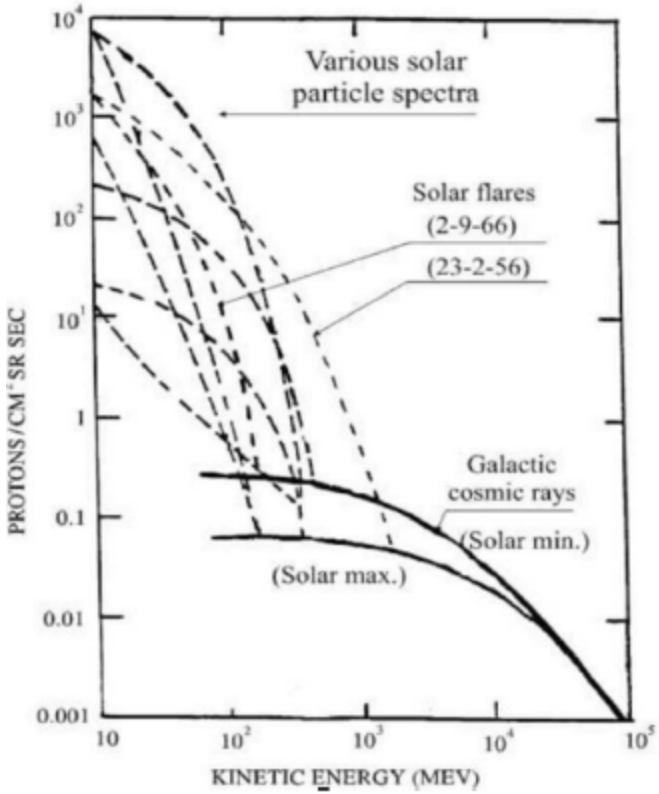

Passive Shields

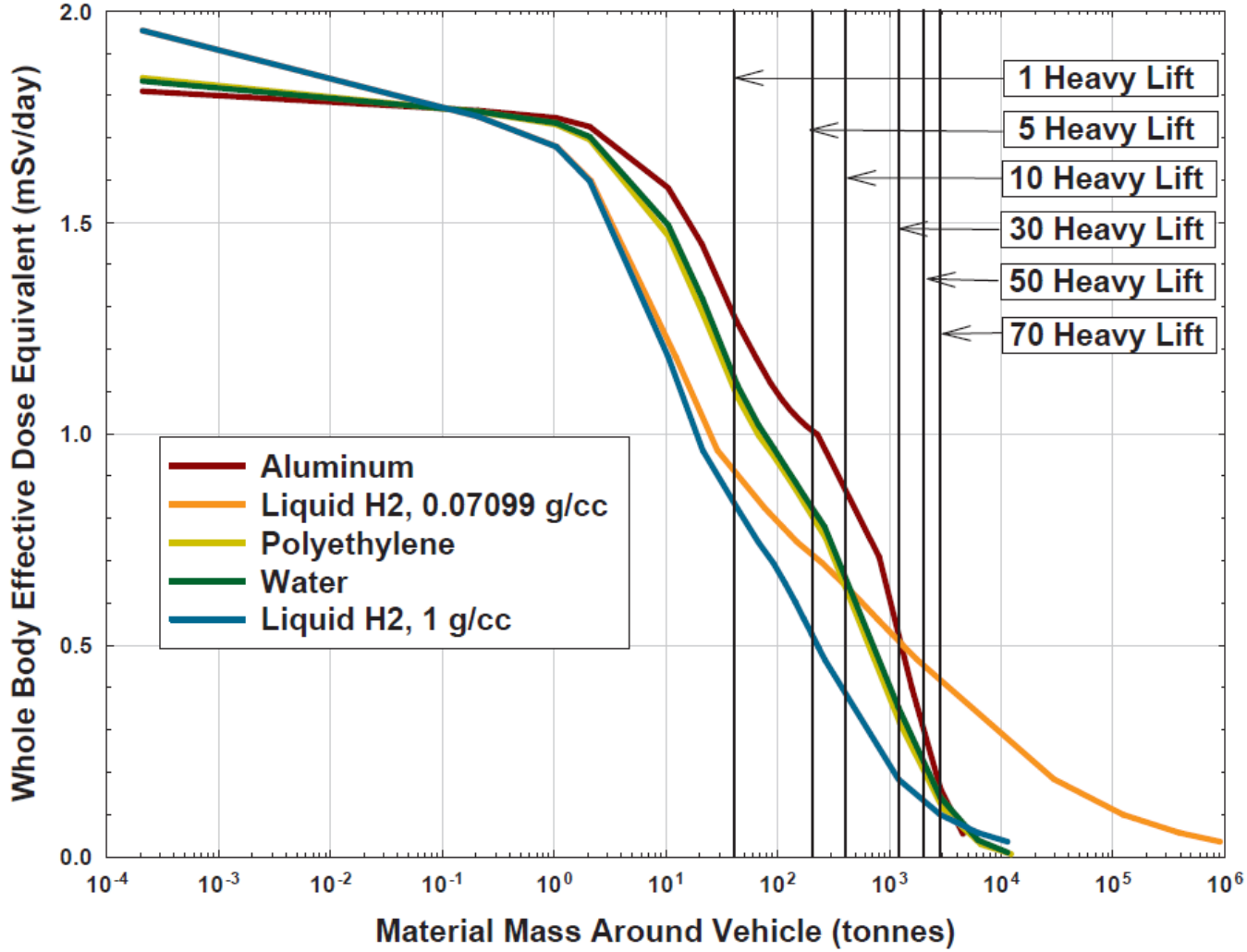

Whole body effective dose equivalent in $\frac{\text{mSv}}{\text{day}}$ for a shielding material in a spherical vehicle.

*Note the Liquid H2, 1 g/cc is fictional

Per LaRC/R. Singleterry

Passive Shields

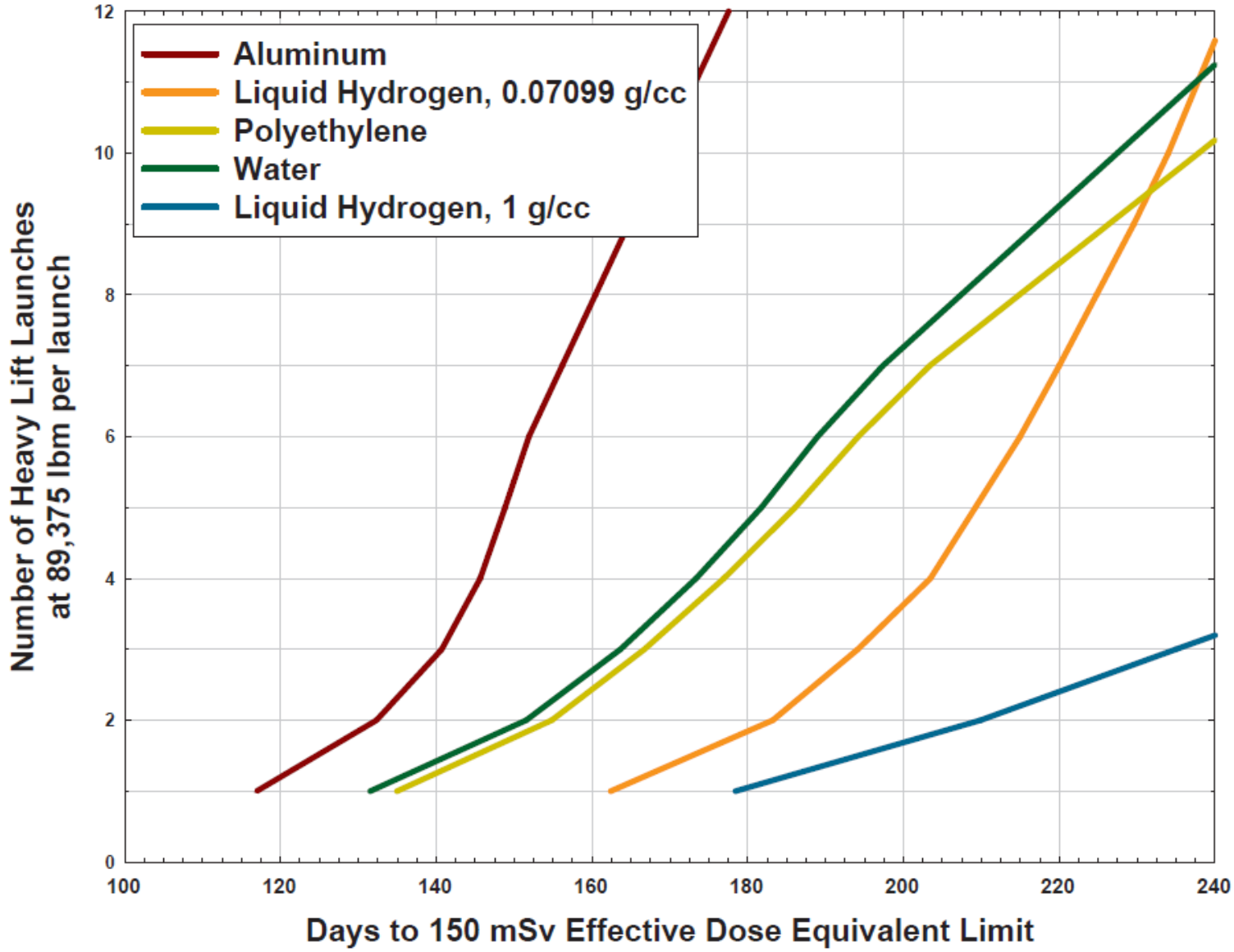

Per LaRC/R. Singletery

State of the Art

- Low Temperature Superconducting
  - Superconducting: <18K
  - Operation: <5K - Boiling point of liquid Helium
    - Low temperature required to get persistent coil charge (near zero resistance) and requires liquid helium system for cooling
    - Most prevalent use is with MRI medical machines
- SOA High Temperature Superconducting (HTS)
  - Superconducting: < 90K.
  - Operation: < 77K - Boiling point of liquid Nitrogen
    - Colder temperatures desired to increase current density and magnetic field strength
    - High current density capacity of HTS magnets decreases total mass and system power requirements

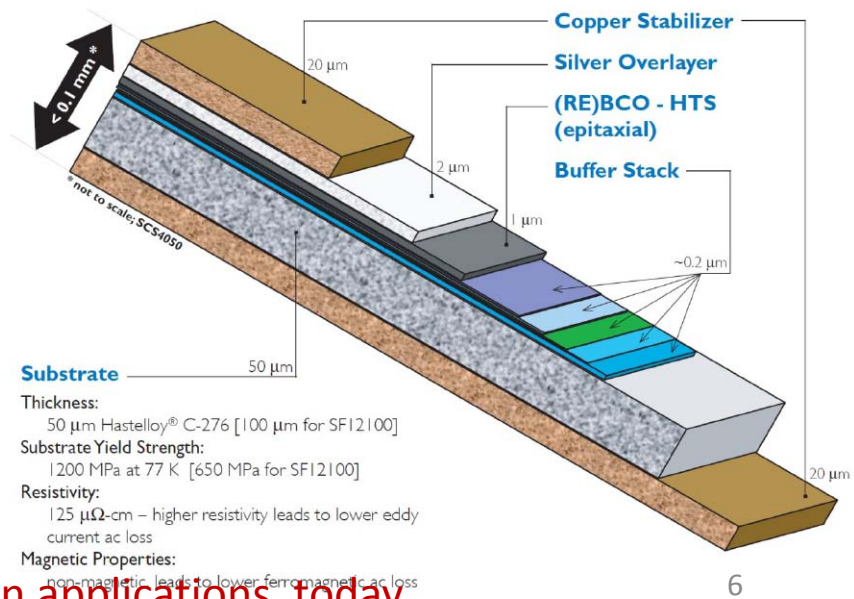

HTS material is manufactured and used in applications today

Particle Propagation Simulation

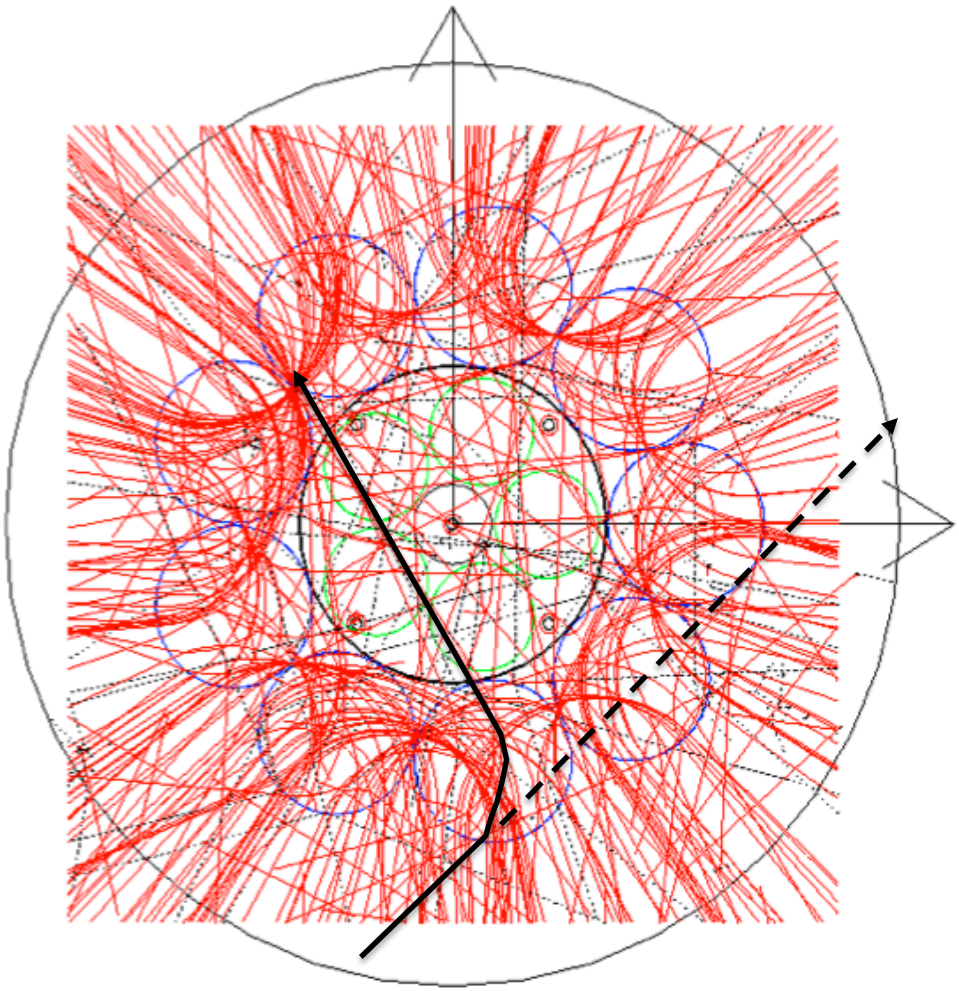

Monte Carlo analysis conducted for spectrum

This analysis depicts a single energy spectra to visualize the magnetic effects

Some particles are turned into the habitat

Secondaries must be accounted for in the total dose

Goal:

- Develop ***Active Radiation Shield*** with required shielding efficiency that can be accommodated by existing or planned launch systems

Approach:

✧ Expandable high temperature superconducting coils

  ✧ "Inflated" by acting Lorentz forces

  ✧ Coils with large volumes, but modest field levels (~ 1Tesla)

Shielding Coil System Requirements:

✧ Minimize charged particle flux into spaceship habitat

✧ Minimize secondary particle production in shielding coil material

✧ Minimize launch weight of shielding coil system

✧ Minimize magnetic flux in spaceship habitat (allowed flux few Gauss)

Configurations

Rating Parameters:

- Shielding Efficiency
- Angular Coverage
- Field in Habitat
- Mechanical Stability/Magnetic Pressure on Individual Coil
- Expandability
- Peak Field Enhancement
- Coil-to-Coil Forces
- Forces on Habitat
- Quench Safety
- kA*meter of Required Conductor
- Ease of Construction
- **Scalability to Higher Fields**

Double Helix Solenoid (AML)

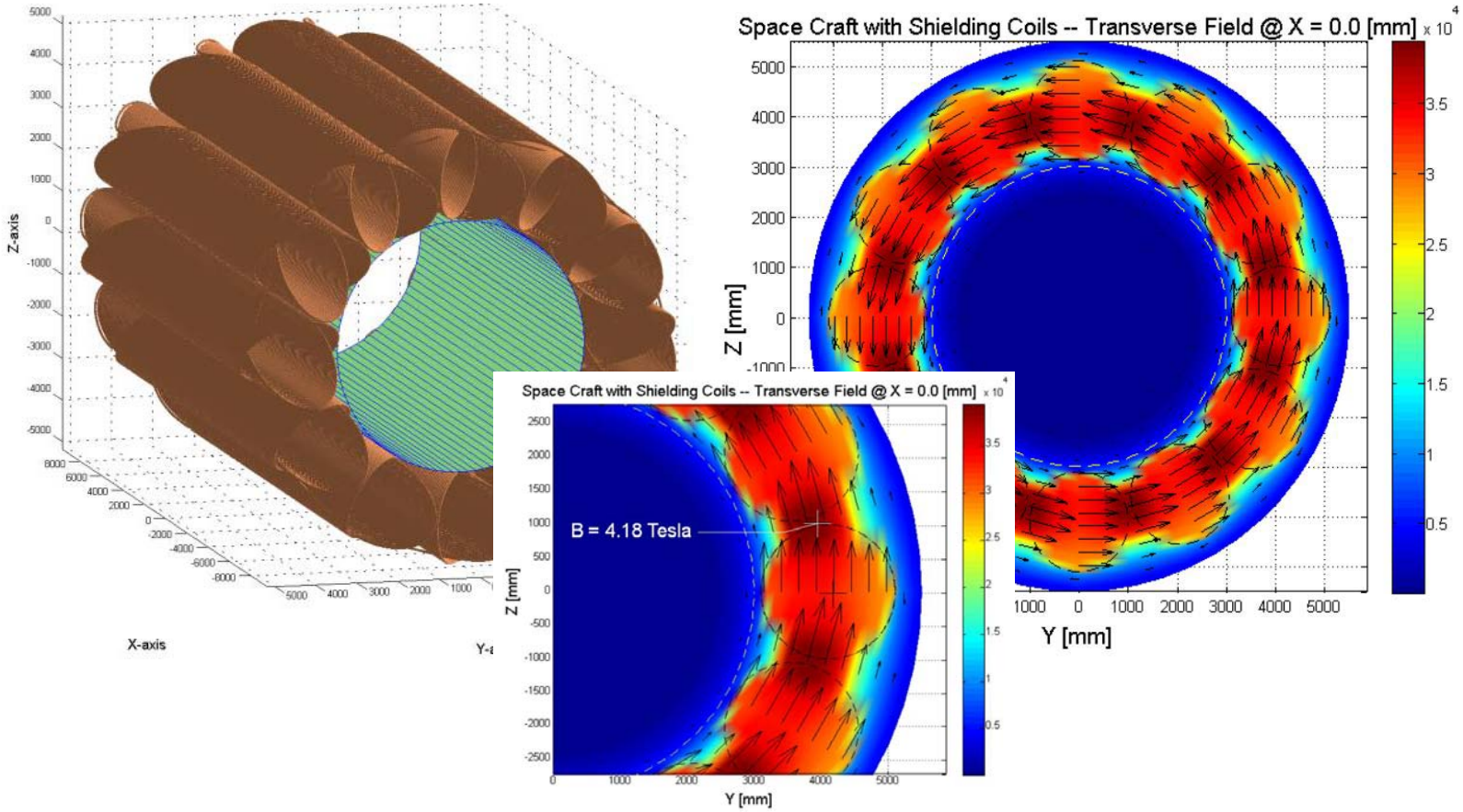

- Field direction changes from coil to coil
- Generating toroidal field with insignificant flux density in spaceship habitat
- Flux sharing between individual coils → strong field enhancement
- Highest field in gap between coils

Forces Acting between Shielding Coils

Effect of Missing Coil:

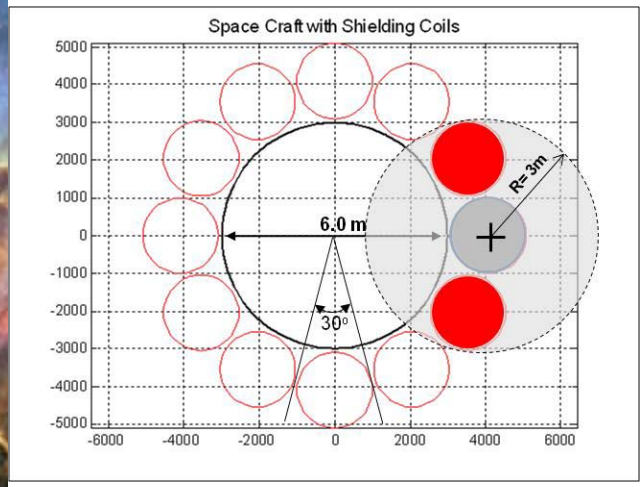

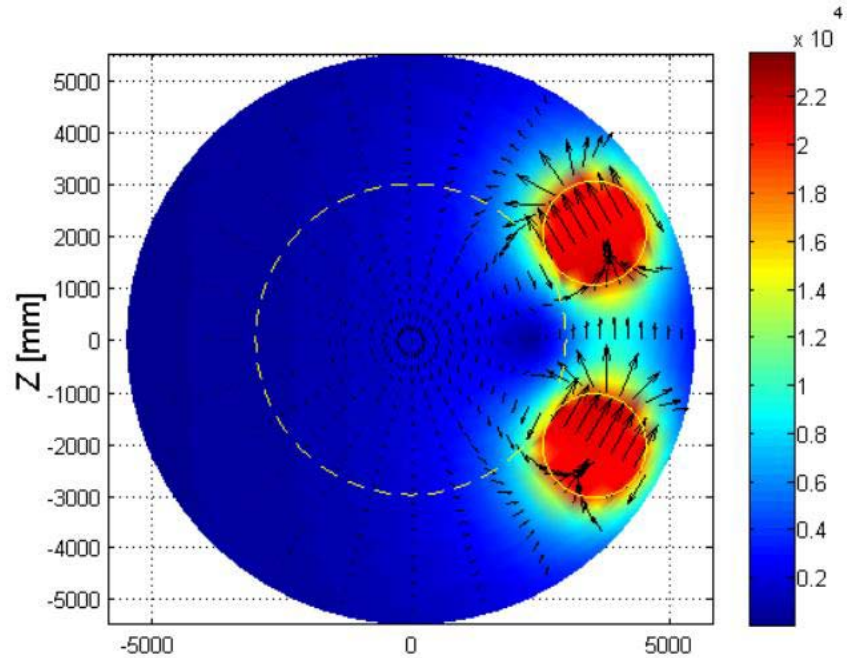

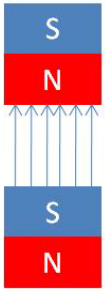

Attractive Force

Total acting force between complete coils: ~ 7 MN
Equivalent to weight of 700 tons

Resulting Pressure on spaceship habitat ~ 10 atm

Double Helix Toroid

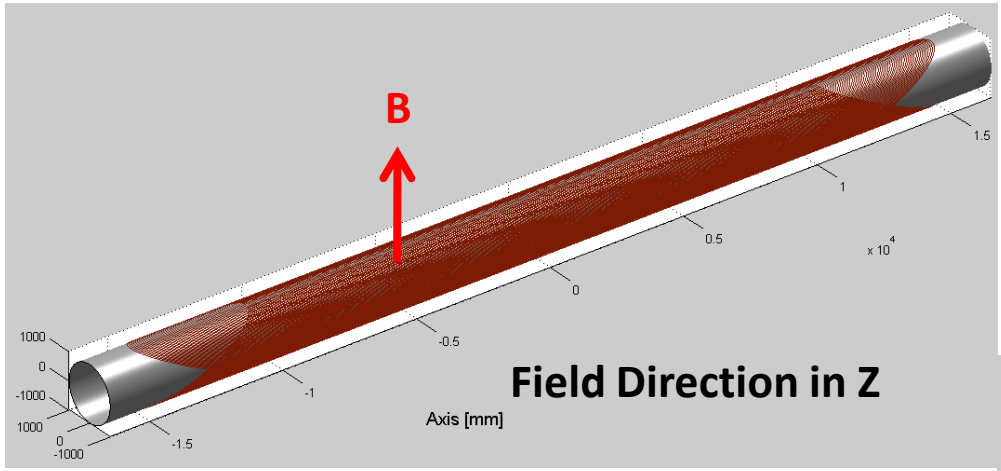

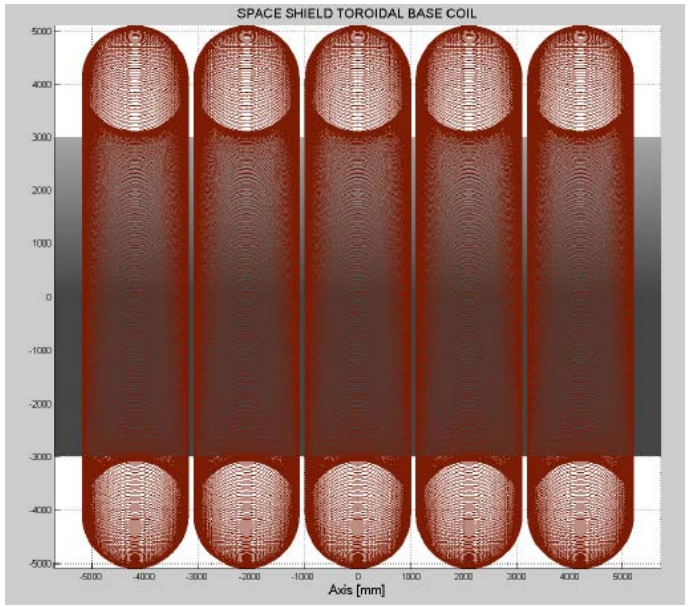

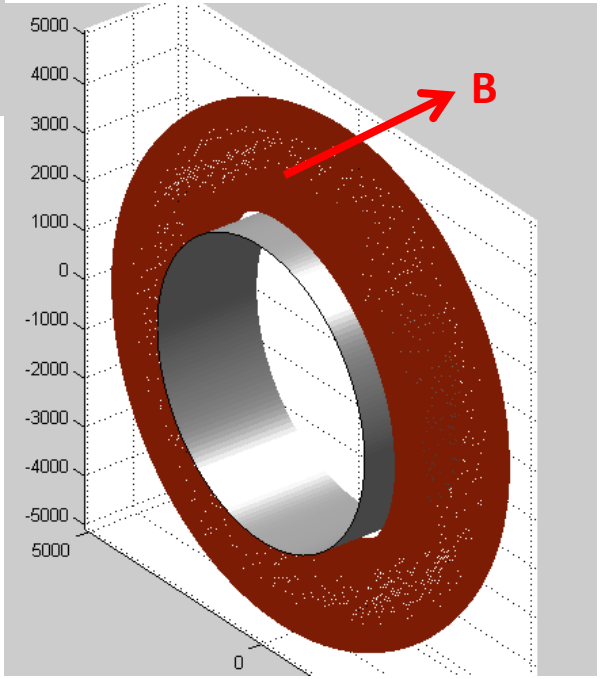

Resulting Field in axial direction of habitat

Double Helix Toroid

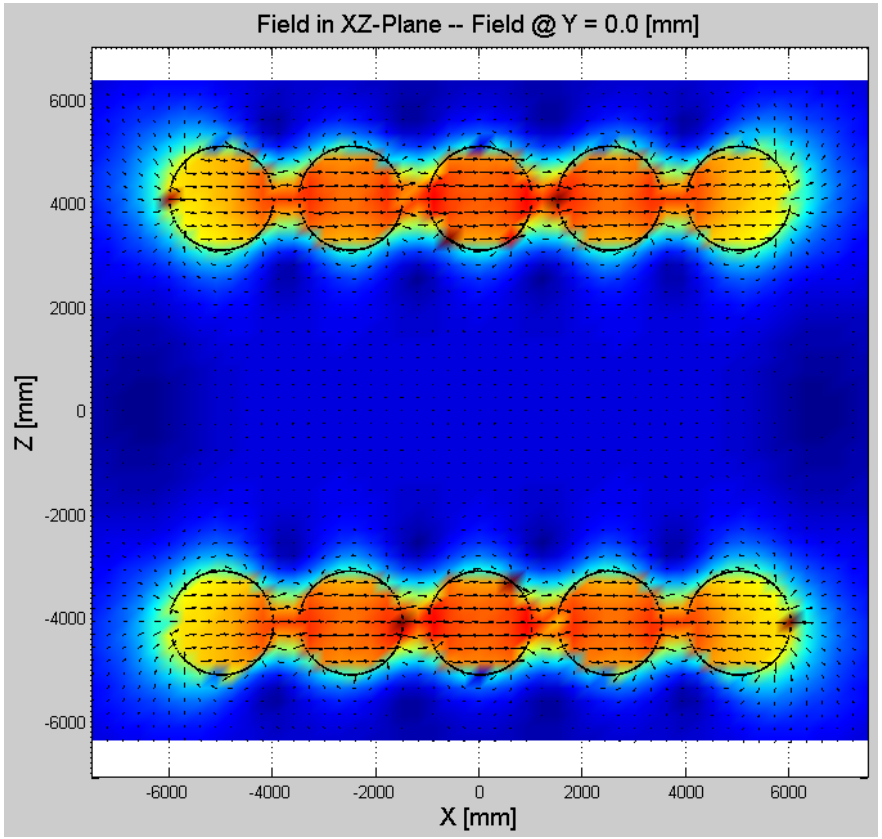

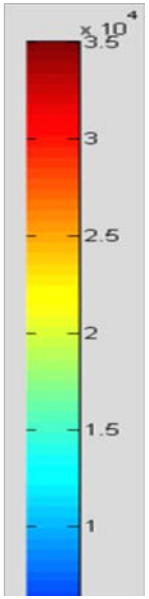

Configuration results in significant field of 0.3 Tesla in habitat

Strong flux sharing between coils

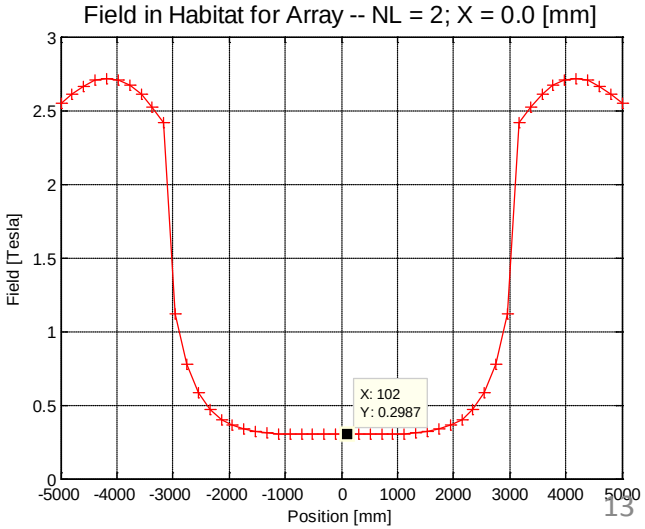

Annual Dose & Comparisons

Z	Solar Minimum			Solar Maximum		
	skin	BFO	body	skin	BFO	body
1	10.8	11.3	11.1	5.5	5.6	5.6
2	5.3	5.2	5.1	2.9	2.8	2.7
3-10	35.9	22.2	11.8	22.1	14.8	6.8
11-20	38.4	16.6	14.8	23.1	11.2	9.2
21-28	27.3	7.1	8.7	17.4	5.1	5.8
total	117.7	62.4	51.5	71.0	39.5	30.1

Table 1.1 Annual Skin, BFO and Whole Body Equivalent Doses in Free Space (cSv/rem)

Z	Free Space			Geom14-2T			Geom14-4T			Geom14-8T		
	skin	BFO	body	skin	BFO	body	skin	BFO	body	skin	BFO	body
1	10.8	11.3	11.1	18.3	13.0	13.5	18.7	13.4	14.0	16.5	11.1	11.7
2	5.3	5.2	5.1	7.7	5.4	5.6	8.1	5.6	6.0	6.9	4.7	4.8
3-10	35.9	22.2	11.8	15.5	10.3	5.2	13.7	9.7	4.7	7.1	4.6	2.5
11-20	38.4	16.6	14.8	11.4	6.6	4.9	10.3	5.2	4.1	5.0	3.2	2.1
21-28	27.3	7.1	8.7	5.6	1.8	1.8	4.4	2.0	1.6	1.8	0.8	0.7
total	117.7	62.4	51.5	58.5	37.1	31.0	55.2	35.9	30.4	37.3	24.4	21.8
fraction of free space dose				0.50	0.59	0.60	0.47	0.58	0.59	0.32	0.39	0.42

Table 5.4 Annual equivalent doses for Geom014 with a 2, 4 and 8 T field for the 2 m ∅ barrel solenoids, compared to the free space dose at solar minimum (units cSv/rem).

Reference ARSSEM report , ESA: R. Battiston, W.J. Burger

High-Current YBCO Conductor Necessary

Single layer coil configuration preferred for radiation space shield

- **Expandability / flexibility**
- **Quench safety**
- **Ease of construction**

High operational currents on the order of 40 kA required

Wide Roeble cables seem to be promising approach

- **Current sharing accomplished by transposed superconductor**
- **10,000 amp seems feasible with 50-mm wide YBCO (2 μm) with current technology**
- **However, R&D needed**

Quasi Persistent Mode Operation:

- **Low resistivity splice needed (<< 10^{-9} Ohm)**

YBCO --- Critical Current of Existing Technology

SuperPower Inc.

UNIVERSITY of HOUSTON

Large improvements in in-field I_c of Zr-doped wires

>1,500 A at 40 K and B < 1 T

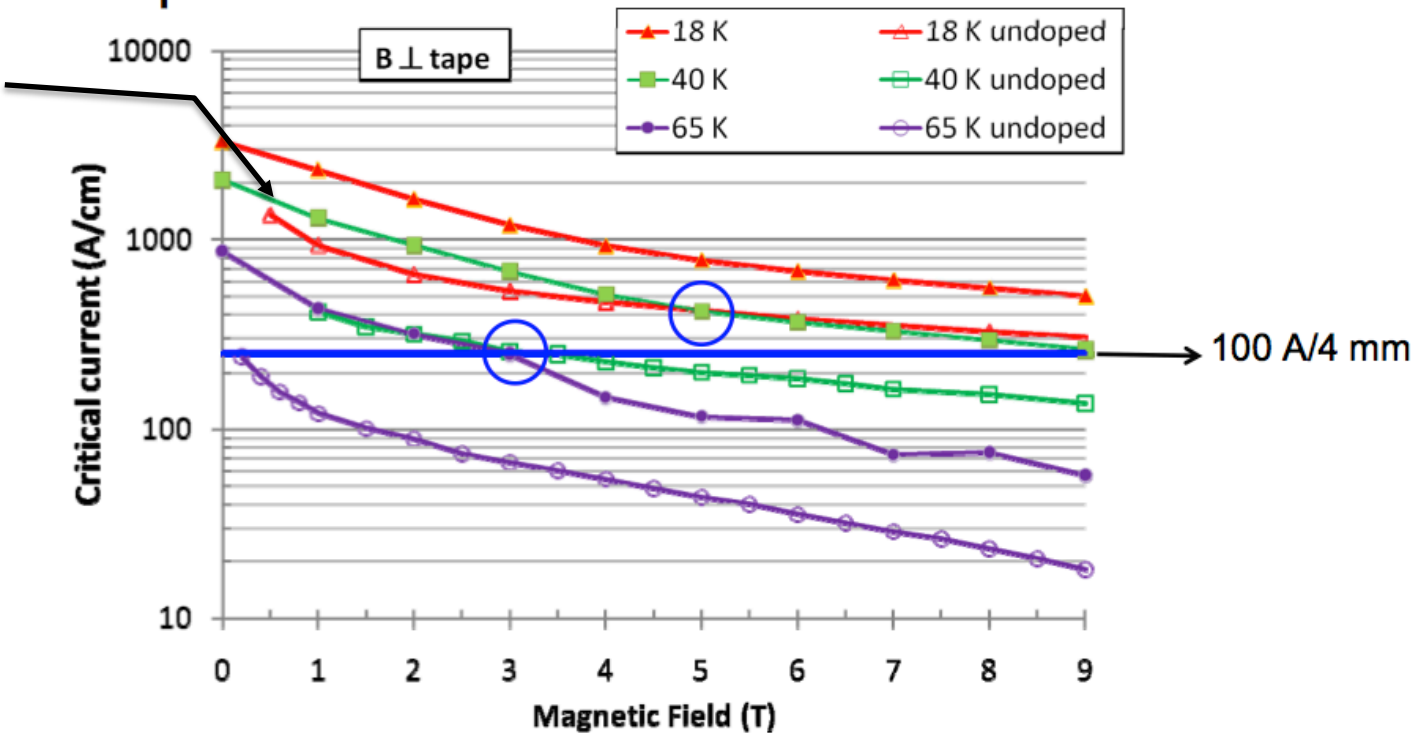

100 A/4 mm achieved at 65 K, 3 T in Zr-doped wire compared to 40 K, 3 T in undoped wire

165 A/4 mm achieved at 40 K, 5 T in Zr-doped wire compared to 18 K, 5 T in undoped wire

Roebel Cable --- High Current Capacity

Cut meander shape out of YBCO tape conductor

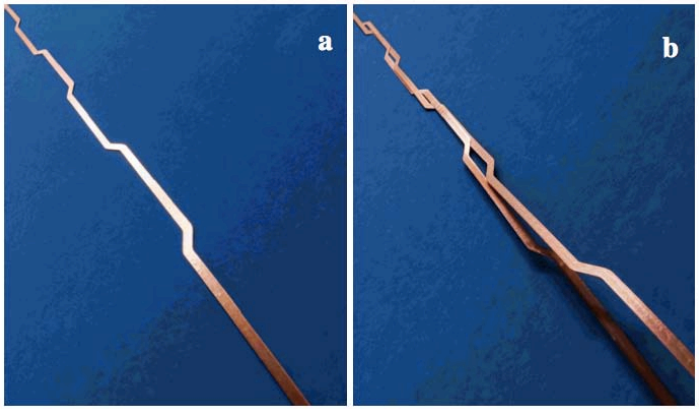

Meander-shaped strips “dip in” and “come out” from stack.

Summary

- Straight double-helix coil array had no problem with field in habitat, but large forces acting between coils and on habitat
- Toroidal coils resulted in larger fields in habitat, but no forces on habitat
- Structural mass increases exponentially with magnitude of the B-field
  - A smaller field size and larger field extent is desired
  - This may be obtained with the expandability concept

Latest Configuration

Parameter	Unit	Value
6 Solenoids Surrounding habitat		
Diameter	m	8.0
Length	m	15-20
Nominal Field	T	1.0
Nominal Current	kA	40
Stored Energy	MJ	400
Inductance	H	0.5
Magnetic Pressure	atm	~4

- Persistent mode operation
- Flux Pump charged
- Expandability considered

Large Fully Inflated Coil

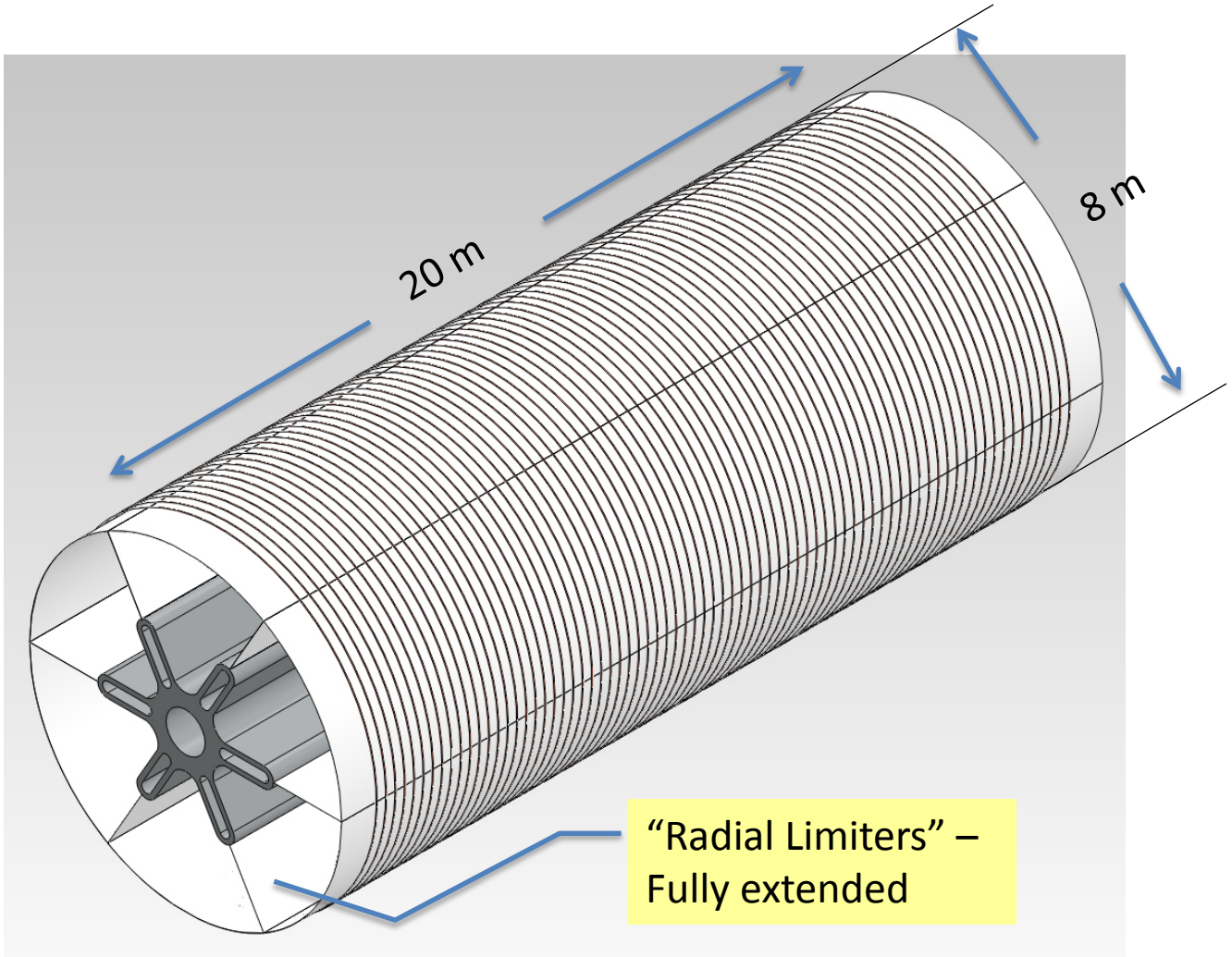

Solenoid Coil Fully Deflated

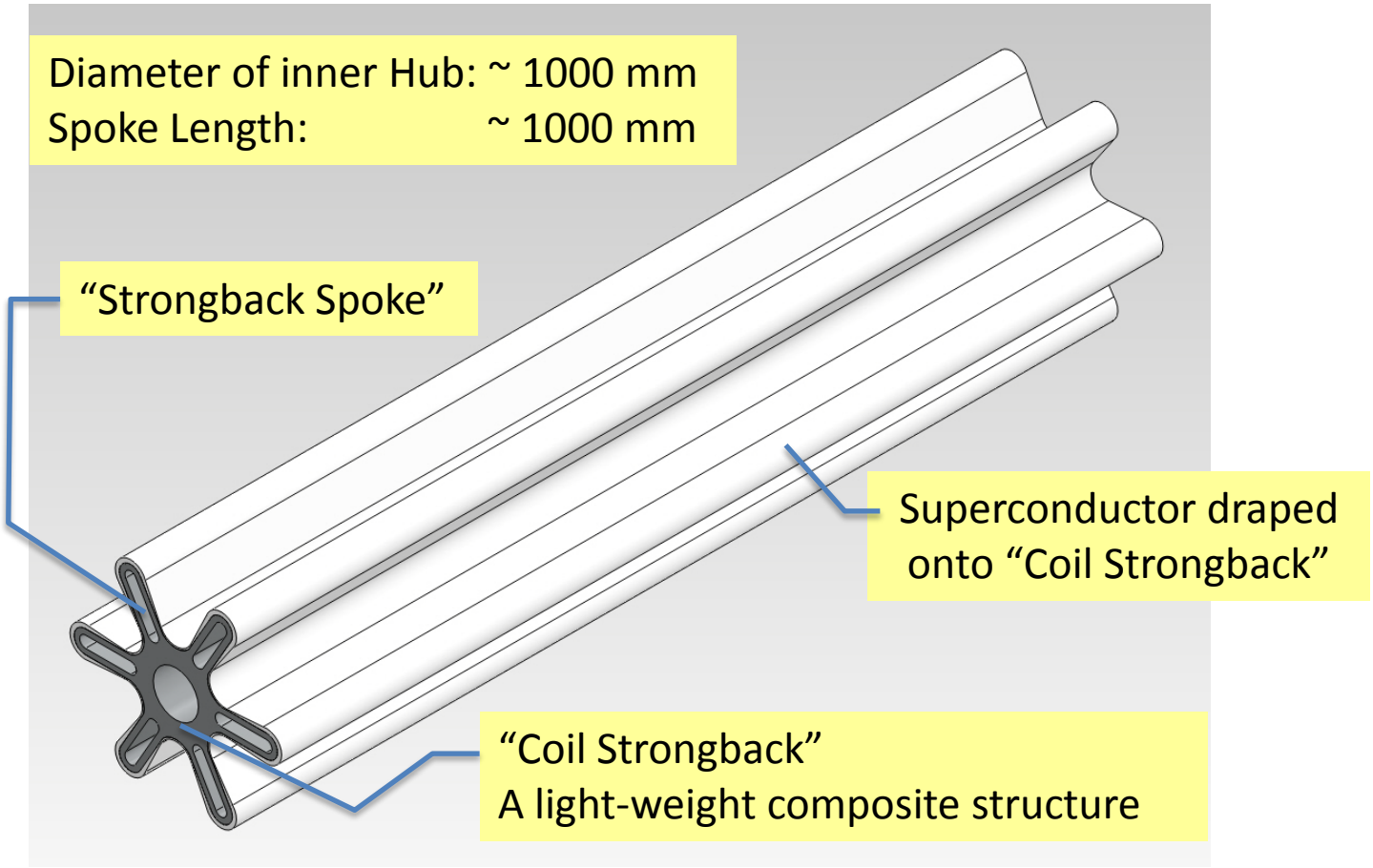

By vacuum pumping the superconducting "Liner" is sucked to the "Strongback Coil" surface, closely following its contour of the "Spokes".

Partially Inflated Coil – Partial View

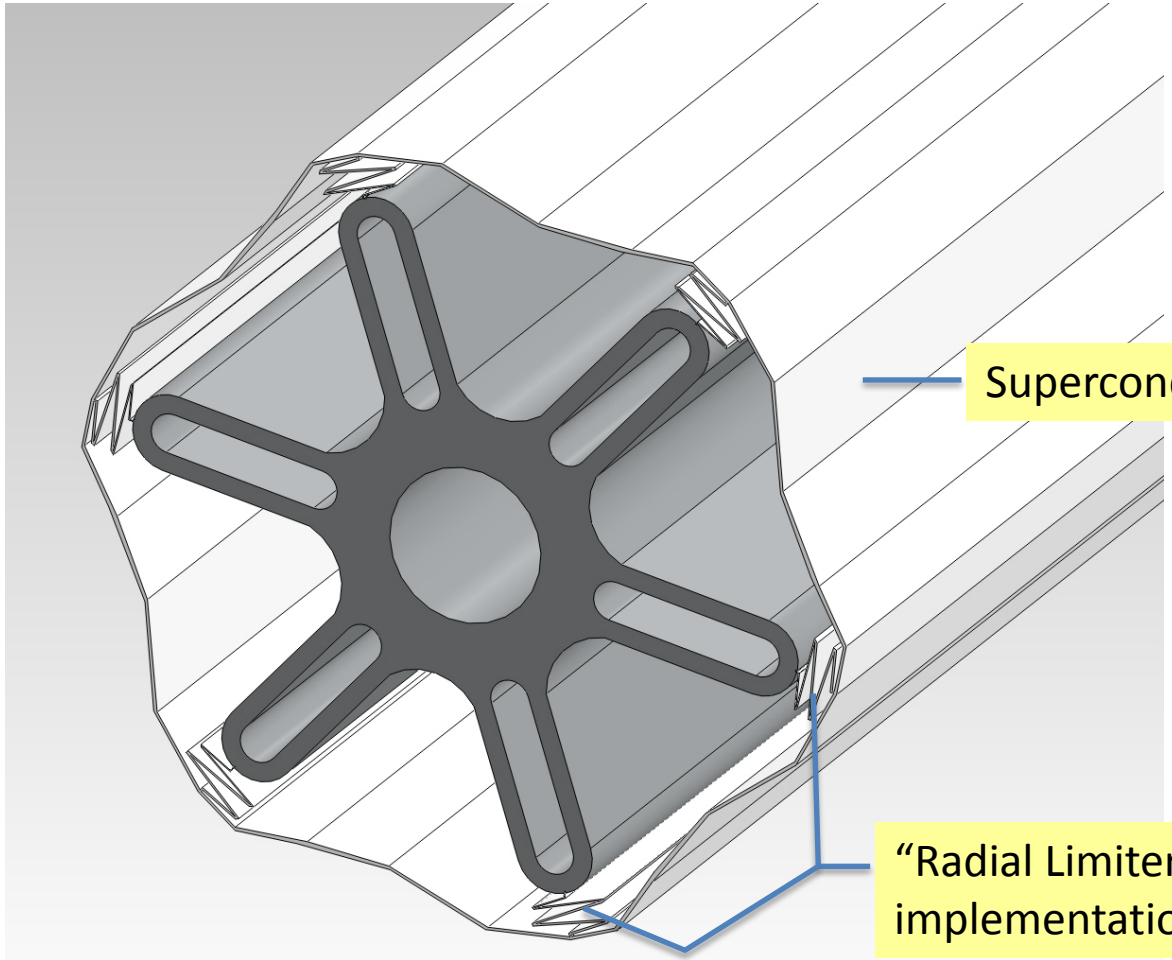

Packaging of Shielding Coils for Launch

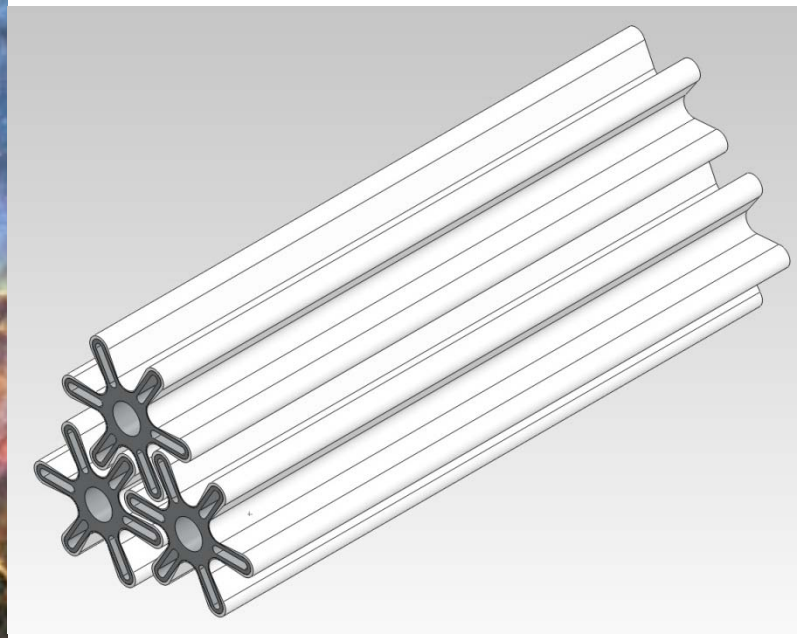

The indicated dimensions are approximate only

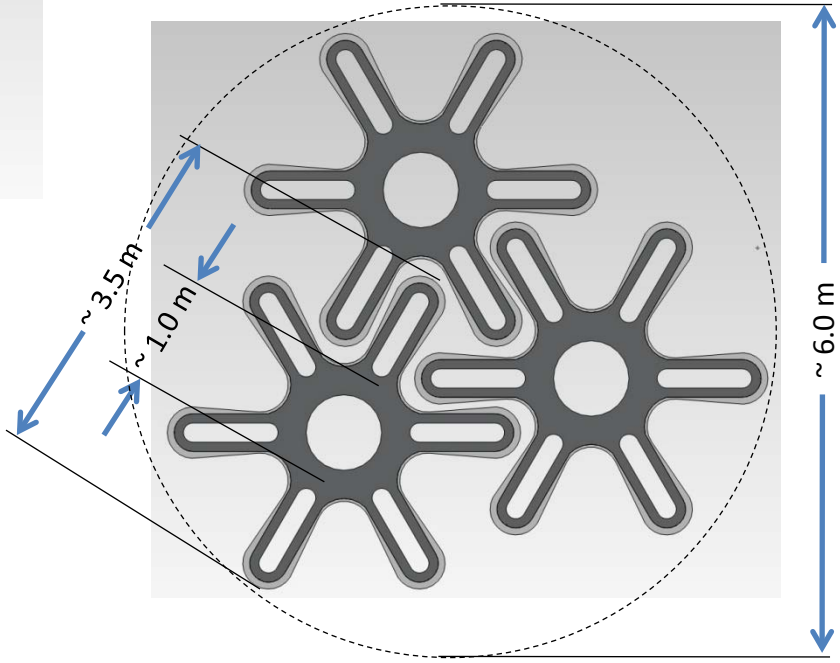

Layout: Habitat with Compensation Coil

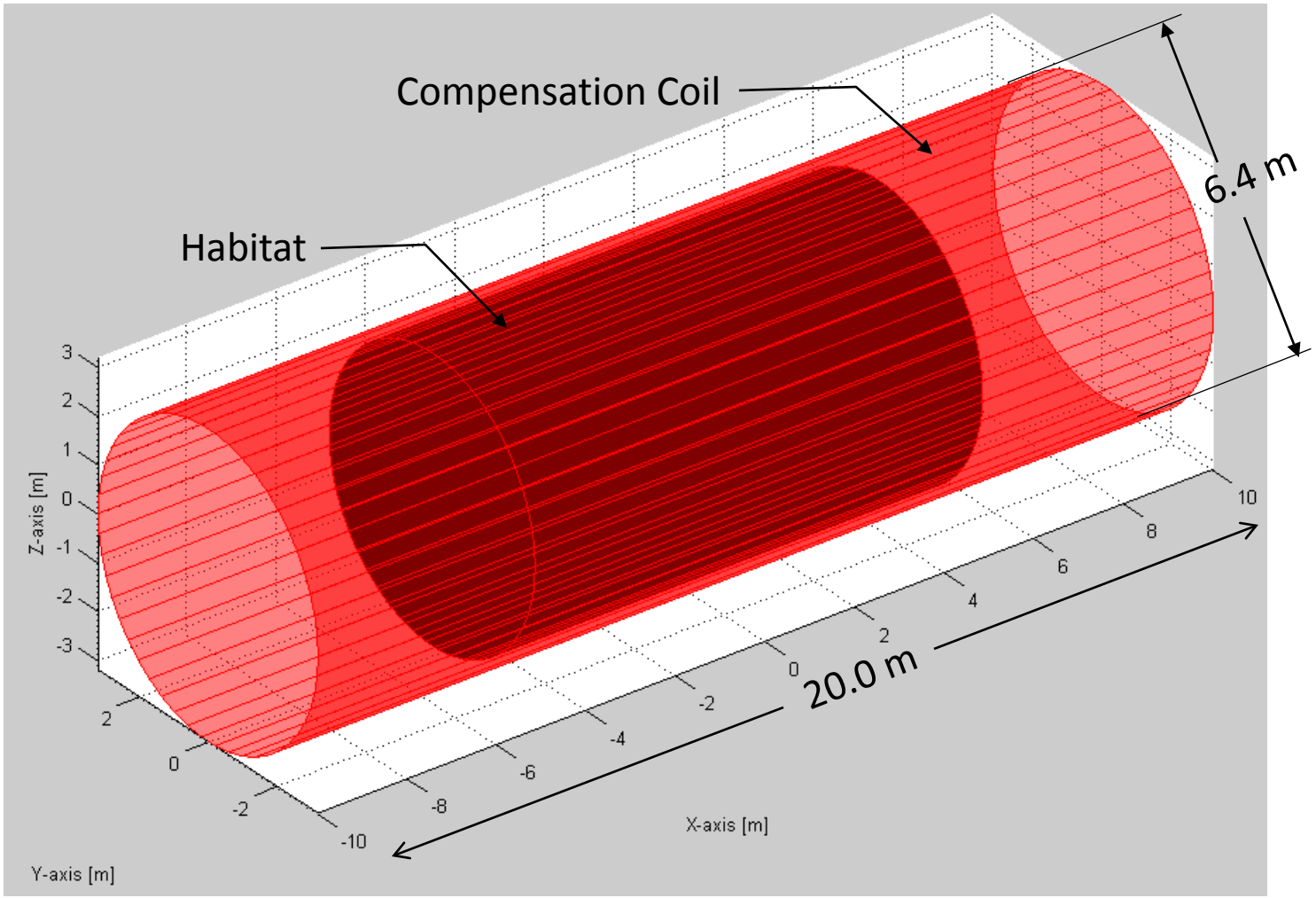

Layout: Shielding Coils with Habitat and Compensation Coil

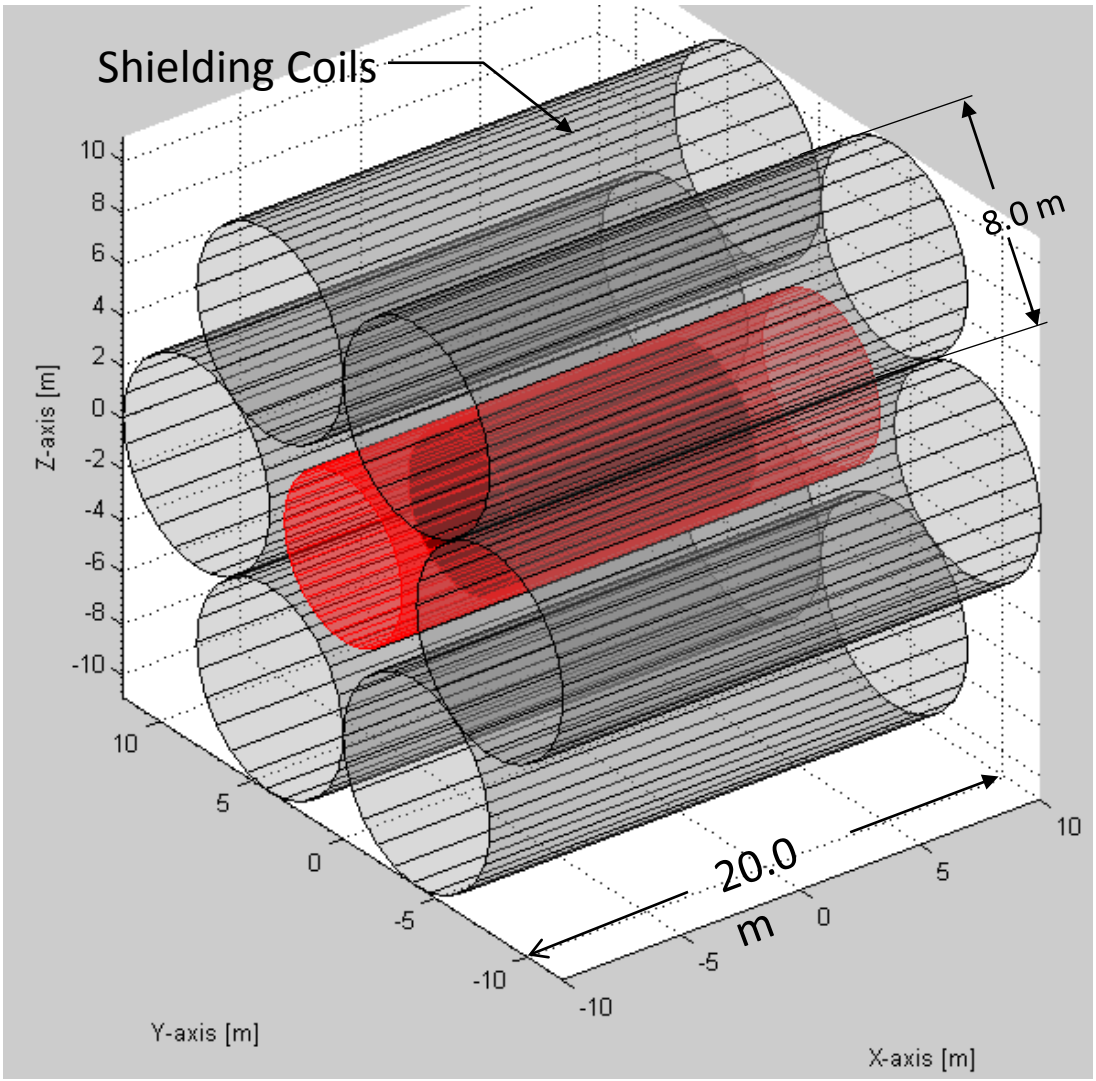

The complexity of this configuration is somewhat "NIAC'y", particularly when working out a viable thermal design concept

Nonetheless, the approach is to determine the dose reduction for such a system using current HTS technology

Axial Field: Solenoidal Base Coil --- Single Layer

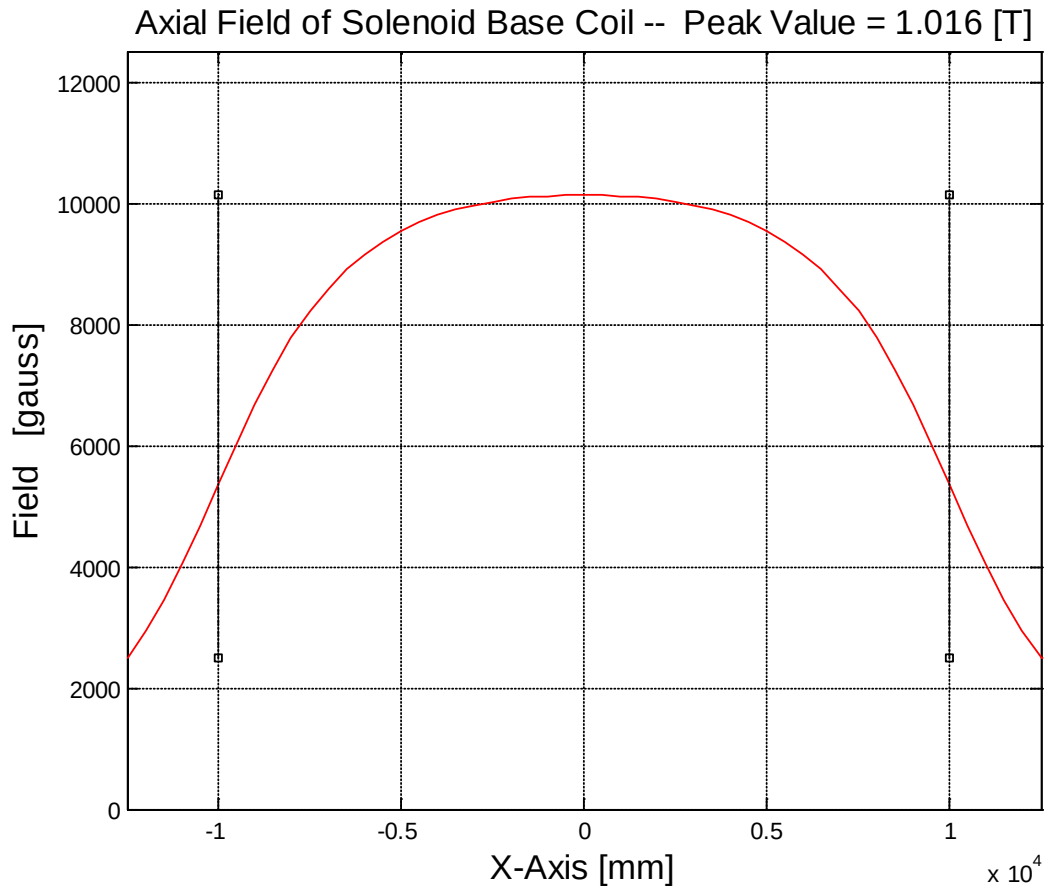

Coil Radius:	4000 mm
Number of turns:	400
Tape spacing:	50 mm
Coil length:	20,000 mm
$I_{Operational}$:	43,500 A

Analyze Field in Indicated X-Y-Plane

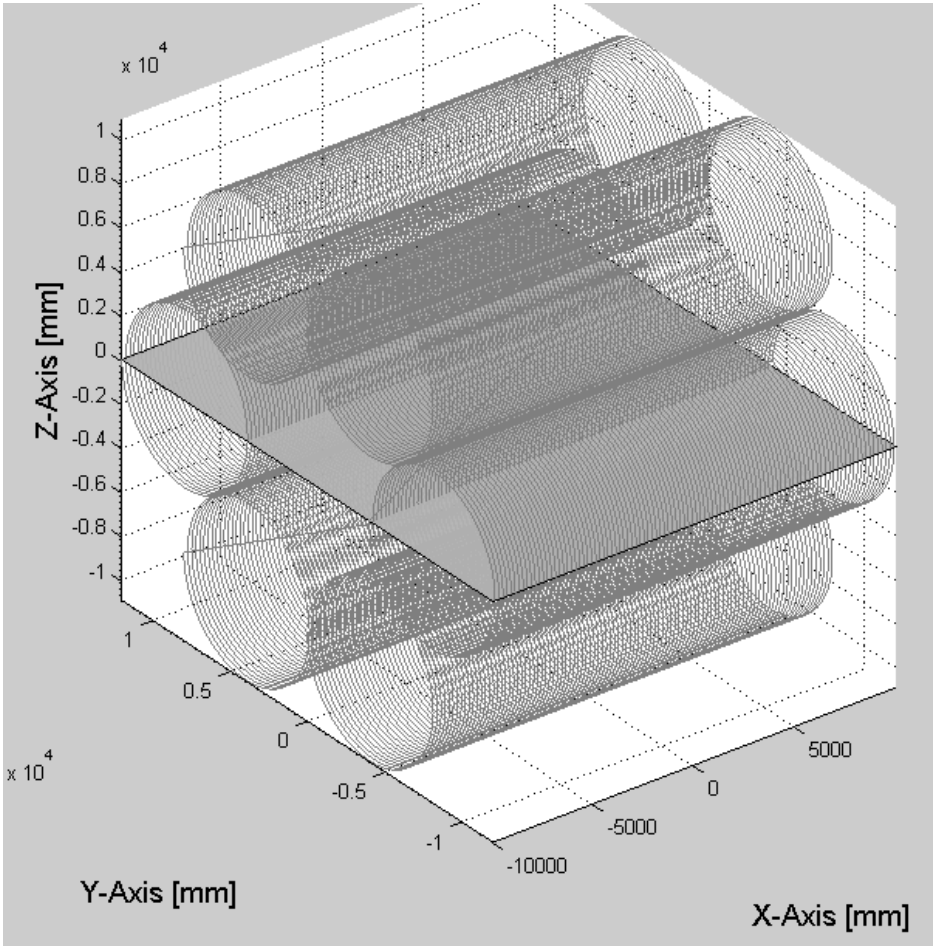

Field in X-Y-Plane

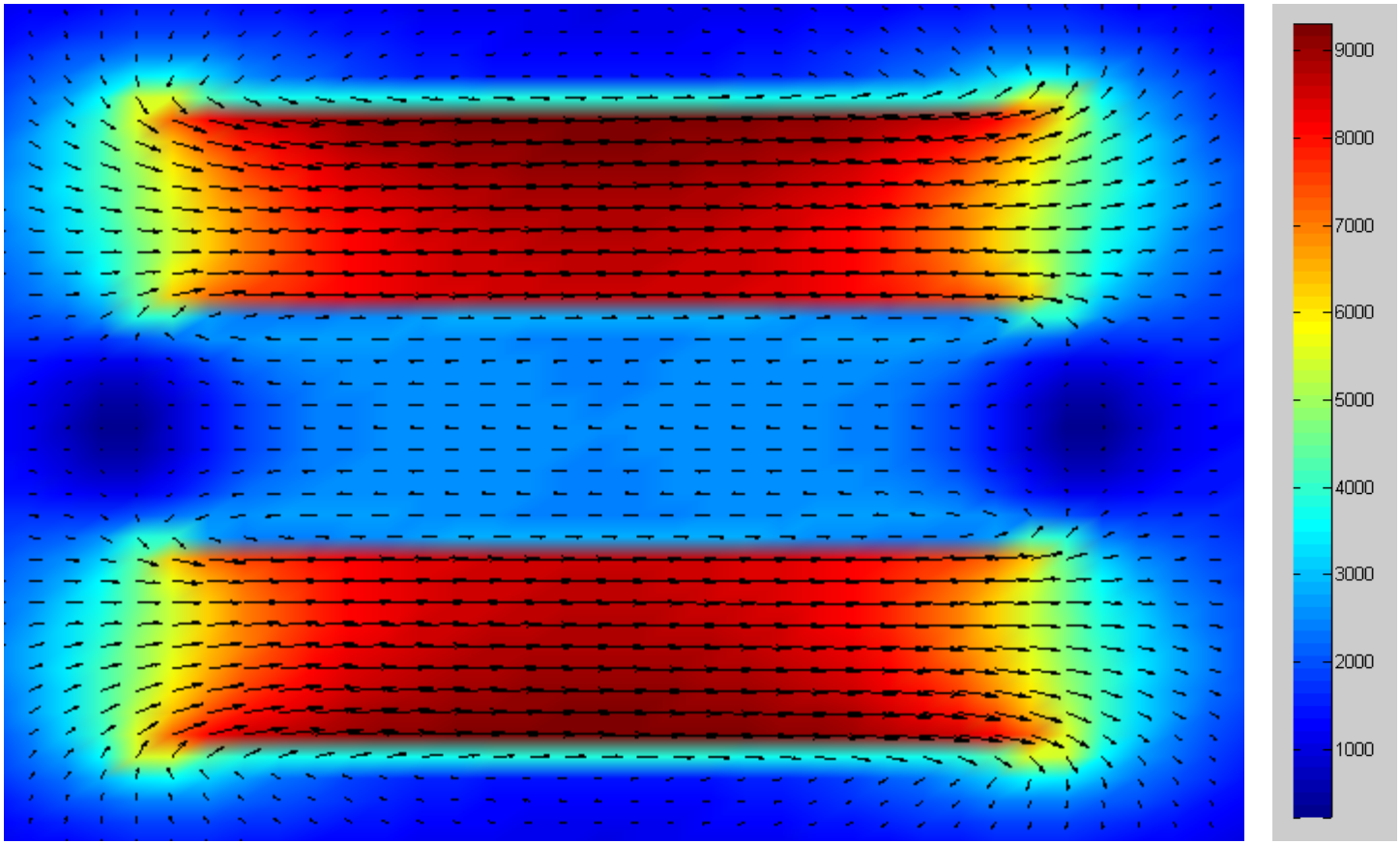

Integral Bdl in Array Assembly

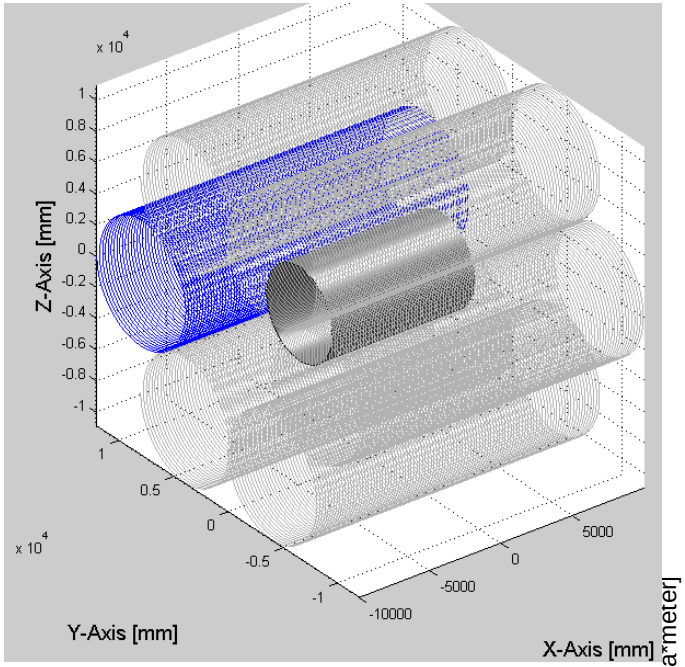

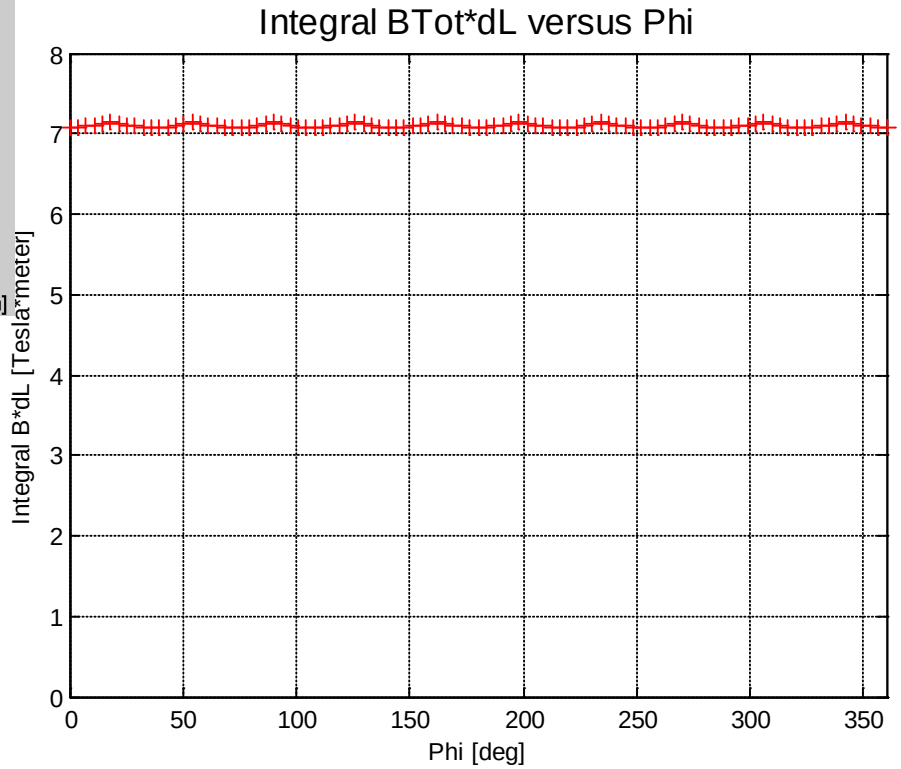

Effect of Compensation Coil (Not Optimized)

Field in Habitat without Compensation Coil

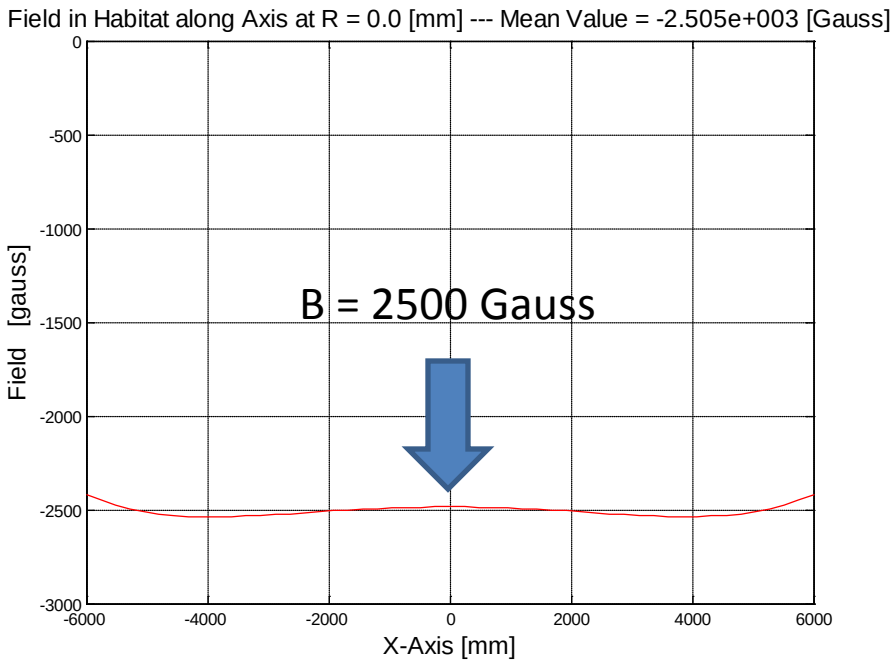

Field in Habitat with Compensation Coil

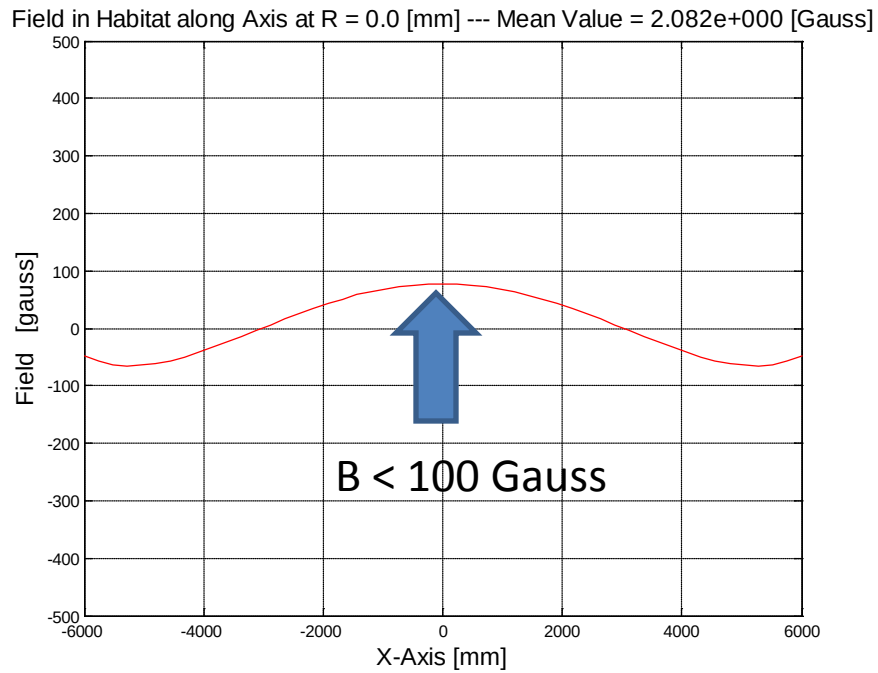

Flux Pump Principle

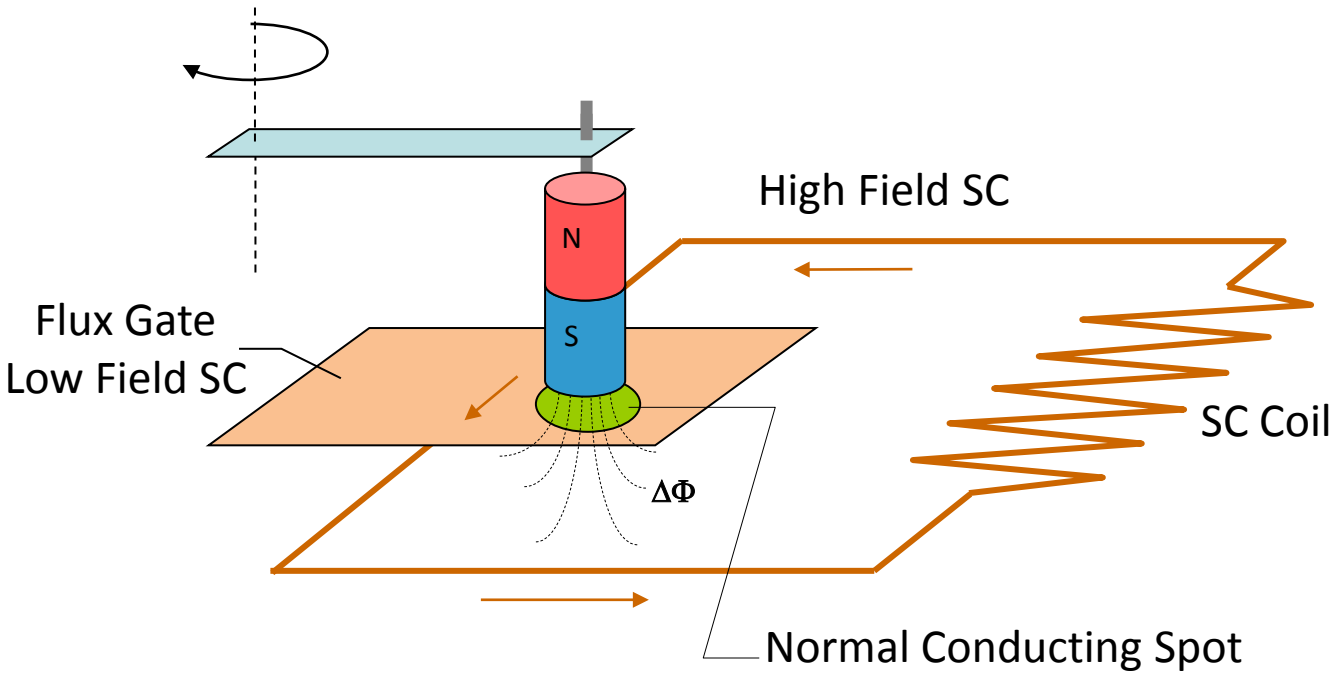

- Superconducting coil connected to flux gate enables persistent mode operation.
- Permanent magnet produces normal conducting spot when crossing the flux gate.
- Spot diameter smaller than flux gate; current through coil continues around spot.
- Magnetic field too weak to quench superconducting leads.
- Flux trapped – limited by volume and J_c of flux gate.

Full Wave Superconducting Rectifier Flux Pump

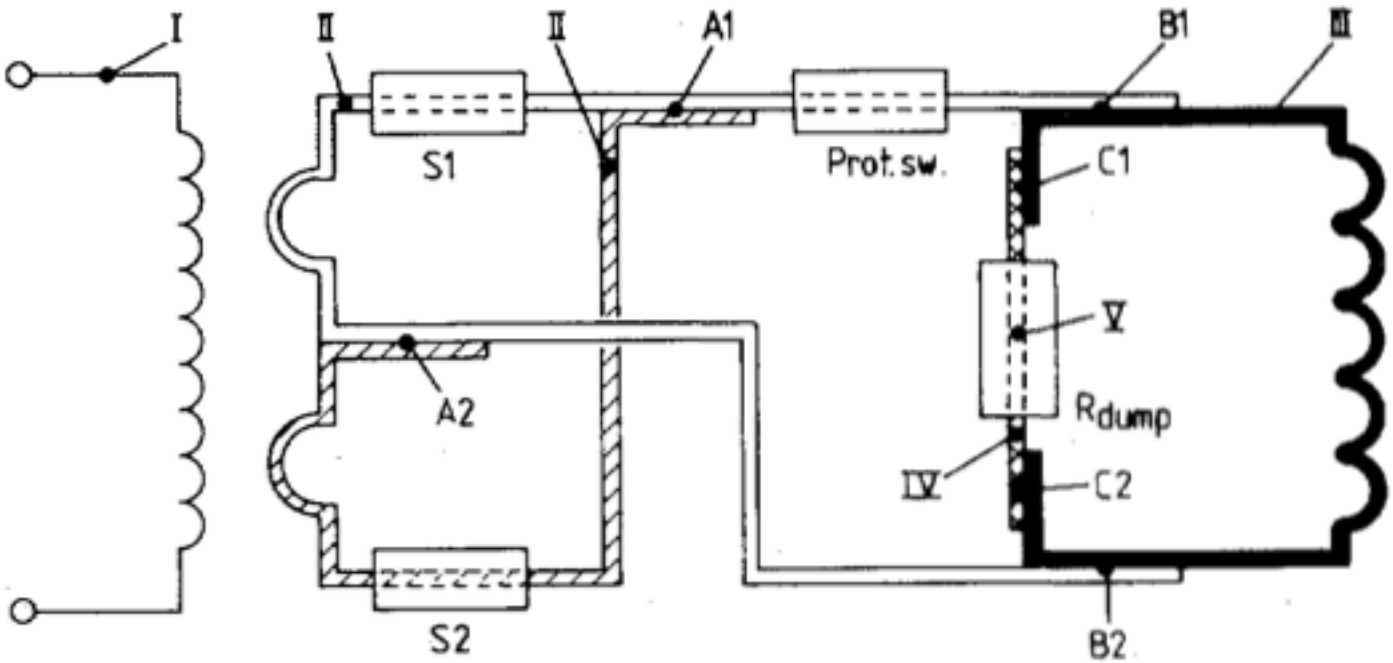

H.J. ten Kate et al., A Thermally Switched 9 kA Superconducting Rectifier Flux Pump, IEEE Transactions on Magnetics, Vol. Mag-17, No.5, Sept. 1981

35 A, 0.1Hz primary → 26.4 kA secondary, 5.4 MJ/hr

Systems based on LTS conductor

Mass Estimate Status

Coil System	Mass (kg)
Strong-back, 20 m carbon	2714
Conductor, 20 m coil	503
Blanket	2895
Thermal system	TBD (significant)
Contingency, 20%	1200
Total weight of a 8 m dia coil	7500 kg or ~7.5 tonnes
Compensator coil	TBD
6 Coils Total	**45 tonnes (no thermal included)**

Fringe Fields

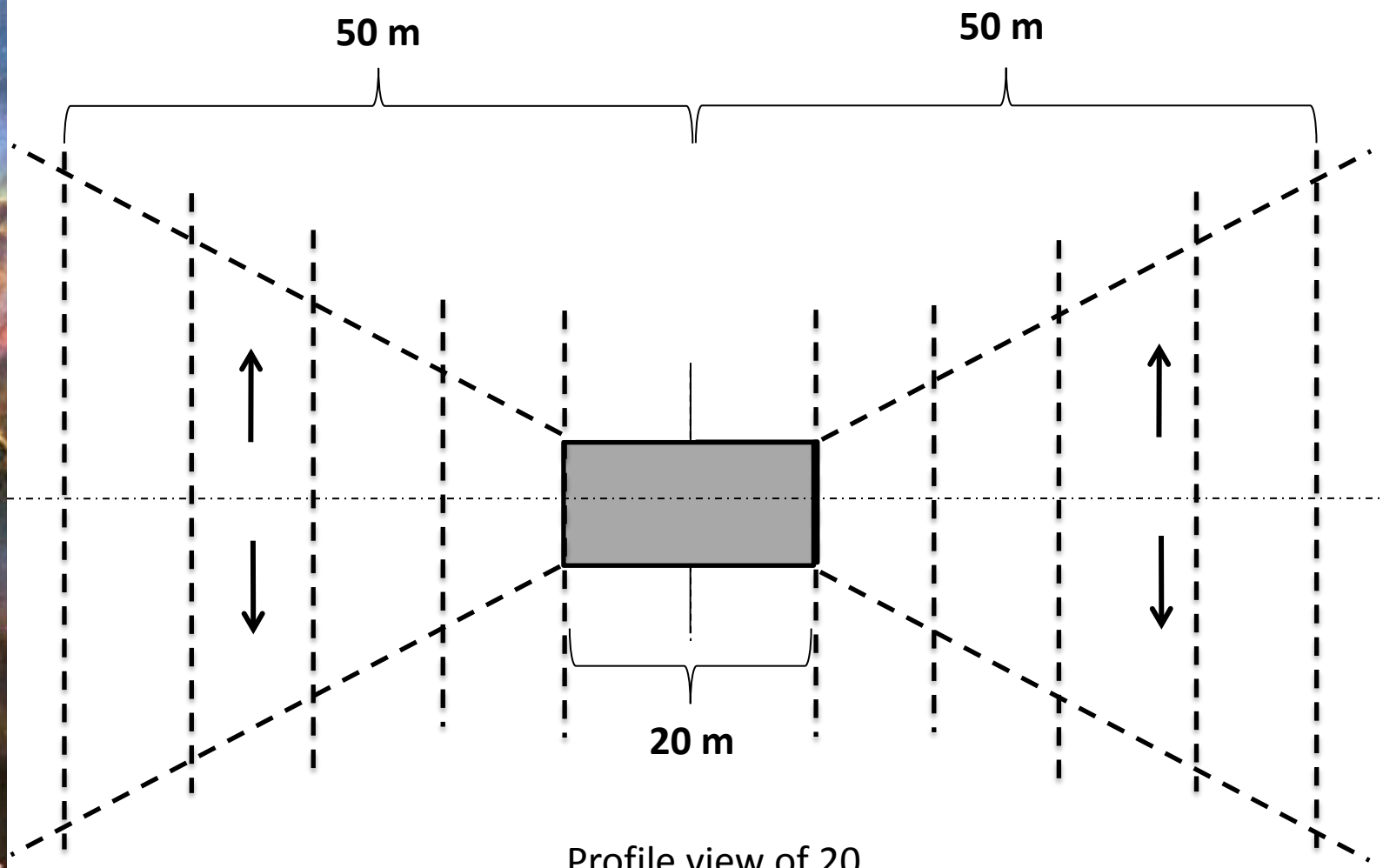

Profile view of 20 meter Coil System

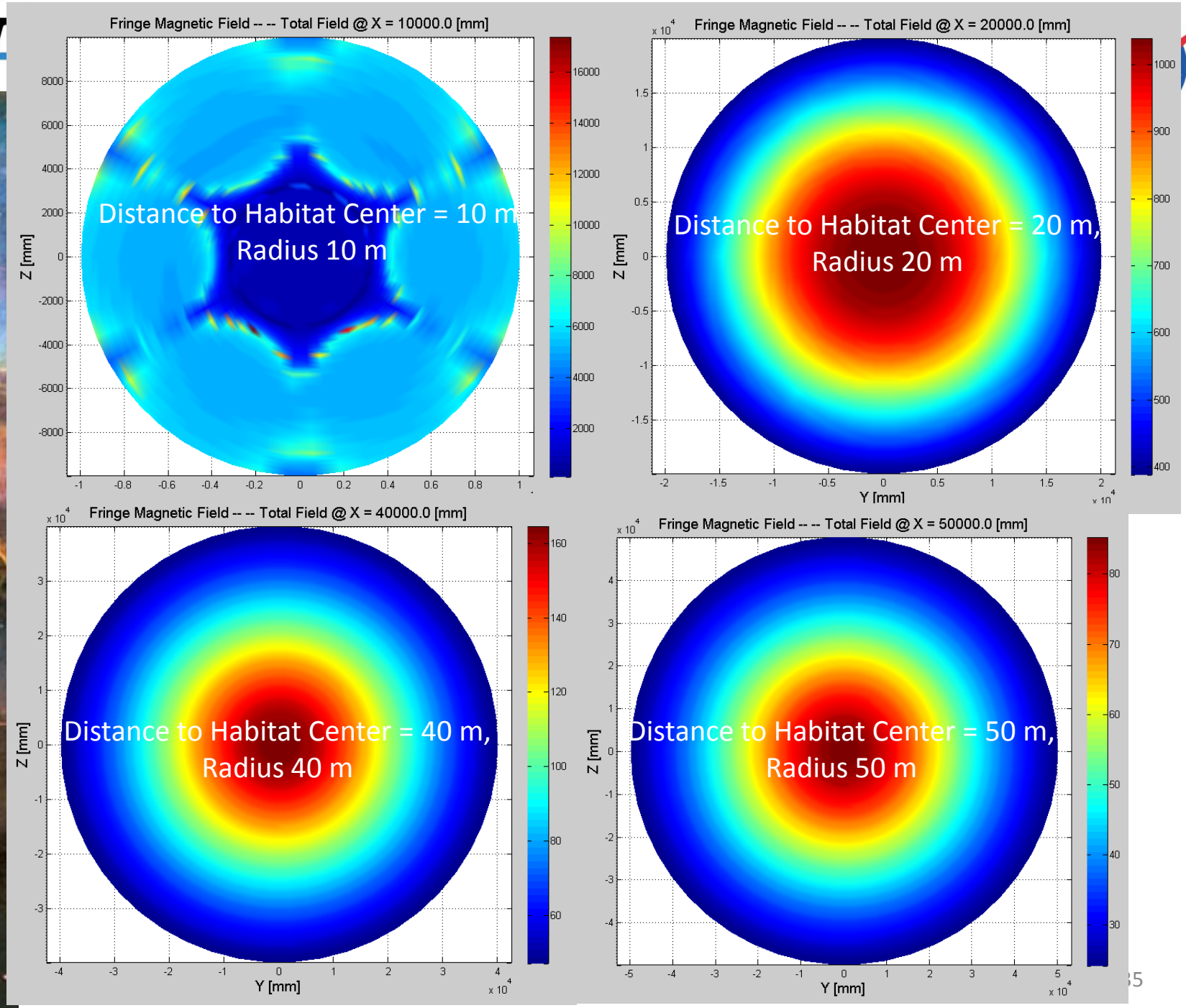
Fringe Magnetic Field -- -- Total Field @ X = 10000.0 [mm]
Distance to Habitat Center = 10 m
Radius 10 m
Z [mm]
Fringe Magnetic Field -- -- Total Field @ X = 20000.0 [mm]
Distance to Habitat Center = 20 m,
Radius 20 m
Z [mm]
Y [mm]
Fringe Magnetic Field -- -- Total Field @ X = 40000.0 [mm]
Distance to Habitat Center = 40 m,
Radius 40 m
Z [mm]
Y [mm]
Fringe Magnetic Field -- -- Total Field @ X = 50000.0 [mm]
Distance to Habitat Center = 50 m,
Radius 50 m
Z [mm]
Y [mm]

Forward Work

- Thermal System Design Concept Completion
- Mass and power estimates
- Evaluate Risk and Risk Mitigation Approaches
- Iteration and final Monte Carlo Analysis
  - Efficiency of Configuration
  - fringe effects taken into account?
- Active - Passive Shielding Comparison

To Summarize

- Shield configuration developed which fully encloses habitat
- Complete array consists of 6 coils
- Integral Bdl of coils increased to 8 Tesla * meter
- Field in individual coils reduced to 1 Tesla
  - Increased current carrying capacity of conductor
  - Reduce forces and stored energy
  - Single layer coils require ~ 40 kA
- Coil diameter 8 m, all solenoids
  - Facilitates application of wide tape conductor
  - Uniform internal pressure distribution except for bends
- Field in habitat less than 3000 Gauss is completely canceled with a compensation coil surrounding habitat