July 28, 2004
Volume 1, Revision 2.1

NASA's Implementation Plan for Space Shuttle Return to Flight and Beyond

A periodically updated document demonstrating our progress toward safe return to flight and implementation of the Columbia *Accident Investigation Board recommendations*

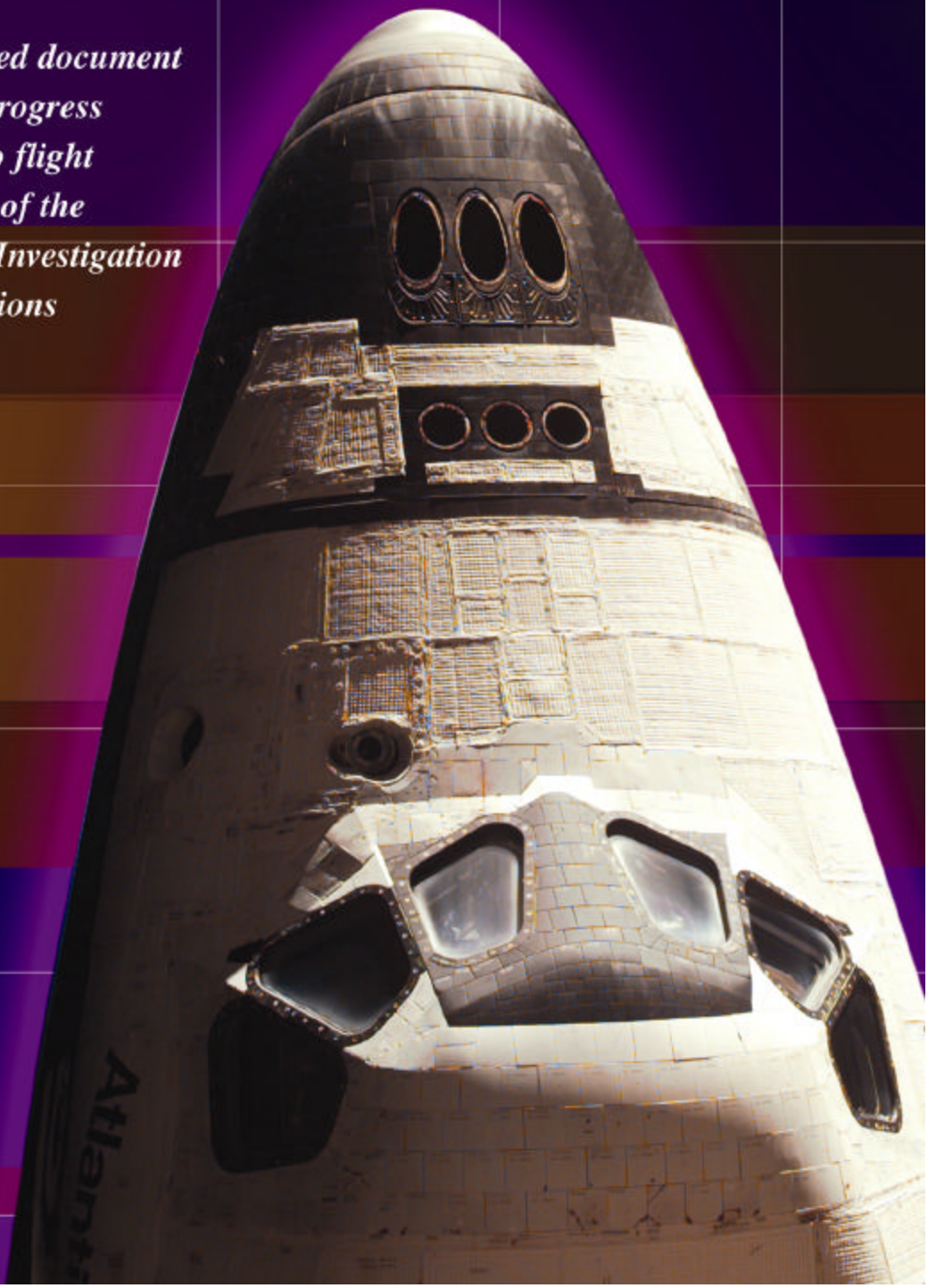

NASA's Implementation Plan for Space Shuttle Return to Flight and Beyond

A periodically updated document demonstrating our progress toward safe return to flight and implementation of the* Columbia *Accident Investigation Board recommendations

July 28, 2004
Volume 1, Revision 2.1

An electronic version of this implementation plan is available at www.nasa.gov

Revision 2.1 Summary
July 28, 2004

NASA's return to flight (RTF) efforts continue to evolve as we identify appropriate solutions to our RTF challenges and begin to prepare for our first flight. Our planning and work has also been affected by the Vision for Space Exploration, which has focused the Shuttle Program on the goal of completing International Space Station (ISS) assembly, and then retiring the Shuttle planned for the end of the decade.

Since the last version of *NASA's Implementation Plan for Space Shuttle Return to Flight and Beyond* (Revision 2) was released in April 2004, NASA has completed its response to several of the *Columbia* Accident Investigation Board (CAIB) recommendations. We continue to make significant progress in understanding the debris environment and the material characteristics of the Orbiter and Thermal Protection System (TPS); as a result, we are able to better target critical areas for hardening prior to RTF. Even more critical to our ability to return safely to flight, we have made significant progress in reducing the debris shed from the External Tank (ET) during ascent.

Work to develop viable repair techniques and materials for the TPS is under way, and progress has been made on repairing acreage tiles and Reinforced Carbon-Carbon (RCC) cracks and small holes. However, NASA's attempts to develop a rigid overwrap for the Shuttle's wing leading edge that could be used to repair large holes encountered significant technical challenges. As a result, we have deferred development of the rigid wrap and are pursuing a broader research and development effort to identify more flexible alternatives for repairing holes in the wing's RCC that are larger than four inches in diameter.

The Space Shuttle and ISS Programs have also made progress in defining and planning for a Contingency Shuttle Crew Survival (CSCS) capability. The two programs have completed analyses that show that, for our first two flights at a minimum, it is possible to launch a rescue mission during the time that the Shuttle crew can be safely sustained on the ISS. NASA will continue to refine our planning for the unlikely event that CSCS capability must be used.

As our efforts to return the Shuttle to safe flight have matured and the required work has been identified, NASA has gained a better understanding of the costs associated with this challenging endeavor. Along with the tasks required for RTF, we have reinvigorated our safety and engineering cultures. As a result, we have continued to identify safety issues and aging Orbiter issues that require additional work. Therefore Shuttle Program RTF content and associated costs have increased in fiscal year (FY) 2004. Most of the additional FY 2004 costs for RTF/CAIB-related activities, Program operations, and sustaining activities were covered by unencumbered funds carried over from FY 2003 and offsets from reduced operations costs due to the shift in the resumption of Shuttle launches from FY 2004 to FY 2005. The total costs for RTF will not be known until the completion of the first Shuttle missions to the ISS in FY 2005. However, NASA expects that by late fall of 2004 we will have developed a better understanding of the FY 2005 financial situation. A full discussion of the status of RTF funding is provided in a following section.

Finally, NASA has begun to close out key RTF constraints with the Return to Flight Task Group (RTFTG). We have achieved conditional closure for five of the 15 RTF actions. In April, the RTFTG conditionally closed Recommendation 3.3-1, Reinforced Carbon-Carbon

Nondestructive Inspection; Recommendation 6.3-2, National Imagery and Mapping Agency Memorandum of Agreement; and Recommendation 4.2-3, Closeout Inspection. In July, they conditionally closed two more, Recommendations 4.2-5, Foreign Object Debris, and 10.3-1, Closeout Photography. The NASA Kennedy Space Center (KSC) has completed work to establish a revitalized program for identifying and preventing foreign object debris that surpasses the CAIB's recommendation. NASA has also created a robust system for photographing, archiving, and accessing closeout photography for the Space Shuttle. This system will allow key users across the Agency to quickly and easily access images of the Shuttle systems to make operational decisions during a mission and support postflight assessments. The RTFTG continues to monitor our progress on the remaining RTF actions. NASA has plans to close the remainder by the end of 2004.

A great deal of activity is currently under way and this pace will continue through the Shuttle's Return To Flight. All three Orbiters are going through processing at KSC simultaneously, ETs are being modified with the new TPS configuration, Orbiter TPS inspection and repair techniques are being honed, a wide-range of tests are under way to validate analysis efforts, and the STS-114 crew, ground controllers, and Mission Management Team are in training for the RTF mission.

We remain confident that with the hard work being performed around the Agency and in our contractor workforce, we can return the Shuttle safely to flight. We continue to work toward a first flight in the March-April 2005 launch window.

This revision supercedes all earlier iterations of this Implementation Plan.

On the following page is a list of sections affected by this Revision.

Return to Flight Message from the Space Flight Leadership Council
Return to Flight Cost Summary
Part 1 – NASA's Response to the *Columbia* Accident Investigation Board's Recommendations
- 3.3-2 Orbiter Hardening [RTF]
- 3.3-1 Reinforced Carbon-Carbon Nondestructive Inspection [RTF]
- 6.4-1 Thermal Protection System On-Orbit Inspect and Repair [RTF]
- 3.3-5 Minimizing Zinc Primer Leaching
- 3.4-1 Ground-based Imagery [RTF]
- 6.3-2 National Imagery and Mapping Agency Memorandum of Agreement [RTF]
- 4.2-1 Solid Rocket Booster Bolt Catcher [RTF]
- 4.2-3 Closeout Inspection [RTF]
- 4.2-5 Foreign Object Debris Processes [RTF]
- 7.5-3 Reorganize Space Shuttle Integration Office
- 10.3-1 Digitize Closeout Photographs [RTF]

Part 2 – Raising the Bar – Other Corrective Actions
- 2.1 – Space Shuttle Program Actions
- SSP-3 Contingency Shuttle Crew Support
- SSP-8 Certification of Flight Readiness Improvements
- SSP-12 Radar Coverage Capabilities and Requirements
- 2.2 – CAIB Observations
- O10.4-2 KSC Mission Assurance Office
- O10.8-1 A-286 Bolts
- O10.8-3 Room Temperature Vulcanizing 560 and Kapton
- O10.8-4 Acceptance and Qualification Procedures

Appendix A – NASA's Return to Flight Process

Remove Pages	**Replace With Pages**
Title page (Apr. 26, 2004)	Title page (July 28, 2004)
RTF Message from SFLC (Apr. 26, 2004)	RTF Message from SFLC (July 28, 2004)
xxvii (Apr. 26, 2004) – xxviii (Apr. 26, 2004)	xxvii (July 28, 2004) – xxx (July 28, 2004)
1-13 (Apr. 26, 2004) – 1-30 (Apr. 26, 2004)	1-13 (July 28, 2004) – 1-30 (Apr. 26, 2004)
1-35 (Apr. 26, 2004) – 1-36 (Apr. 26, 2004)	1-35 (July 28, 2004) – 1-36 (Apr. 26, 2004)
1-41 (Apr. 26, 2004) – 1-44 (Apr. 26, 2004)	1-41 (July 28, 2004) – 1-44 (July 28, 2004)
1-51 (Apr. 26, 2004) – 1-52 (Apr. 26, 2004)	1-51 (July 28, 2004) – 1-52 (Apr. 26, 2004)
1-59 (Apr. 26, 2004) – 1-64 (Apr. 26, 2004)	1-56 (Apr. 26, 2004) – 1-64 (July 28, 2004)
1-69 (Apr. 26, 2004) – 1-70 (Apr. 26, 2004)	1-69 (July 28, 2004) – 1-70 (July 28, 2004)
1-91 (Apr. 26, 2004) – 1-94 (Apr. 26, 2004)	1-91 (July 28, 2004) – 1-94 (Apr. 26, 2004)
1-99 (Apr. 26, 2004) – 1-100 (Apr. 26, 2004)	1-99 (July 28, 2004) – 1-100b (July 28, 2004)
2-5 (Apr. 26, 2004) – 2-6 (Apr. 26, 2004)	2-5 (July 28, 2004) – 2-6b (July 28, 2004)
2-15 (Apr. 26, 2004) – 2-16 (Apr. 26, 2004)	2-15 (July 28, 2004) – 2-16 (Apr. 26, 2004)
2-23 (Apr. 26, 2004) – 2-24 (Apr. 26, 2004)	2-23 (July 28, 2004) – 2-24 (July 28, 2004)
2-43 (Apr. 26, 2004) – 2-44 (Apr. 26, 2004)	2-43 (July 28, 2004) – 2-44b (July 28, 2004)
2-71 (Apr. 26, 2004) – 2-72 (Apr. 26, 2004)	2-71 (July 28, 2004) – 2-72 (Apr. 26, 2004)
2-75 (Apr. 26, 2004) – 2-78 (Apr. 26, 2004)	2-75 (July 28, 2004) – 2-78 (Apr. 26, 2004)
A-1 (Apr. 26, 2004) – A-2 (Apr. 26, 2004)	A-1 (July 28, 2004) – A-2 (July 28, 2004)

A black bar in the margin indicates a change.

Return to Flight
Message from the
Space Flight Leadership Council

The recommendations, findings, and observations from the *Columbia* Accident Investigation Board Report provided NASA a roadmap to safely and successfully resume our journey into space. The Report reflects the Board's strong support for return to flight of the Space Shuttle "at the earliest date consistent with the overriding objective of safety." NASA has fully accepted the Board's findings and observations and is working diligently to comply with each and every one of its recommendations, as well as to "raise the bar" in a number of relevant areas.

The new Vision for Space Exploration announced by President Bush on January 14, 2004, further reinforced the importance for the Space Shuttle Program to find the problem, fix the problem, and safely return to flight. The first step of this grand vision is safely returning the Space Shuttle to flight to complete the assembly of the International Space Station by the end of the decade.

NASA's Implementation Plan for Space Shuttle Return to Flight and Beyond outlines the latest plans and progress we have made in response to the Report. It remains a "living document" to be continually updated to record NASA's progress toward safe return to flight. Recommendations and actions identified as return to flight by the Board or NASA will be completed before resuming Space Shuttle flight operations. Also documented are all changes to action plans as a result of the new Vision for Space Exploration.

As we continue to progress toward a safe return to flight, we do so with the STS-107 crew, Mike Anderson, David Brown, Kalpana Chawla, Laurel Clark, Rick Husband, Willie McCool, and Ilan Ramon, in our hearts and minds. Their legacy will continue to inspire us on the road ahead. We strive for excellence in all aspects of our work, strengthening our culture, and enhancing our technical capabilities in order to improve the safety of human space flight.

NASA will return to flight: smarter, stronger, and safer!

Dr. Michael A. Greenfield, Ph.D.
Associate Deputy Administrator
for Technical Programs

William F. Readdy
Associate Administrator
for Space Flight

Return to Flight Cost Summary

Acting on preliminary *Columbia* Accident and Investigation Board (CAIB) recommendations and internal Space Shuttle Program (SSP) initiatives, NASA began incurring costs for return to flight (RTF) activities in fiscal year (FY) 2003. Initial cost estimates were based on RTF plans still in formulation and showed that NASA could need up to $94M in additional budget authority in FY 2003 and $265M in FY 2004. In response, NASA reprogrammed $43M from the Shuttle Service Life Extension Program and requested $50M in supplemental funding from Congress for *Columbia*-related activities. As FY 2003 came to a close, it became apparent that a large portion of the planned RTF work and associated costs would carry over into FY 2004, as the predicted launch date for the first mission back to the Space Station moved from the fall of 2004 to the spring of 2005. The Program entered FY 2004 with $533M in funding to carry over of which $139M was unencumbered and available to apply to RTF content.

At the start of FY 2004, NASA RTF plans were still evolving, and multiple paths were being investigated to provide the best technical response to the CAIB recommendations. The RTF budget estimates provided in FY 2003 were updated and the revised estimates were published in January 2004. NASA cautioned that since RTF content was still changing, the cost estimates for all years would also change. In its initial operating plan for FY 2004, NASA also noted that RTF engineering efforts were still dynamic and additional funds might be required to accommodate the changing RTF content before the end of the fiscal year. Through the second quarter of FY 2004, RTF technical efforts proceeded rapidly. Approval of specific RTF activities through the Shuttle Program Requirements Control Board (PRCB) meant that the maturity of the technical solutions was increasing, allowing for more accurate cost projections. All financial performance indicators showed that sufficient funds would be available to cover all critical path work in FY 2004, but that the costs for FY 2005 would likely exceed the FY 2005 budget requested for the Program. With a considerable amount of RTF work still to be reviewed and approved by the PRCB and the Space Flight Leadership Council and a potential for cost variations in the hundreds of millions of dollars, additional time will be required to assess funding needs for FY 2005 and beyond.

Through the third quarter of this fiscal year, RTF planning gave way to RTF execution and the Program came within the 12-month processing cycle for the first launch in 2005. In addition to the original RTF requirements, the *Columbia* experience led the Program to introduce a higher level of engineering and technical rigor. Many potential risks have been reevaluated and mitigated, resulting in a safer Shuttle system overall. Across the board, fight hardware is now subjected to greater levels of test, teardown, inspection, repair, and recertification for flight, and all elements of the Program are reassessing the adequacy of industrial processes, safety controls, integrated hazard analyses, and flight hardware test protocols. As a result, Program operations and sustaining engineering spending for FY 2004 and cost projections for FY 2005 have increased along with RTF costs.

As stated in the April 26 update to the Implementation Plan, earlier cost estimates did not include all RTF elements under consideration, additional requirements that may be derived from the continuing evaluation of the CAIB recommendations, costs incurred by other Agency activities in support of RTF, and Program budget reserve. This update takes into account all known potential costs, but does not include a budget reserve that could be needed to address unknown challenges that may arise after the first two flights in FY 2005. An integrated Program budget reserve approach will be addressed in the Agency's FY 2006 budget request. Table 1 shows current RTF/CAIB estimates through FY 2005.

Table 1. Return to Flight Budget Estimates/Implementation Plan Map for New Estimates Including Threats* **As of July 21, 2004**

		(Cost in Millions)			Recommendation Numbers Map to Implementation Plan																													
		FY 03	FY 04	FY05**	CAIB #3.2-1	CAIB #3.3-1	CAIB #3.3-2	CAIB #3.3-3	CAIB #3.3-4	CAIB #3.3-5	CAIB #3.4-1	CAIB #3.4-2	CAIB #3.4-3	CAIB #3.6-1	CAIB #3.6-2	CAIB #3.8-1	CAIB #3.8-2	CAIB #4.2-1	CAIB #4.2-2	CAIB #4.2-3	CAIB #4.2-4	CAIB #4.2-5	CAIB #6.2-1	CAIB #6.3-1	CAIB #6.3-2	CAIB #6.4-1	CAIB #7.5-1	CAIB #7.5-2	CAIB #7.5-3	CAIB #9.1-1	CAIB #9.2-1	CAIB #10.3-1	CAIB #10.3-2	SSP Recommendation
(1)	**Total Initiated SSP RTF Activities**	**42**	**465**	**643**																														
RE/RP	Orbiter RCC Inspections & Orbiter RCC-2 Shipsets Spares	2	38	7		X	X									X									X								
RE/RP	On-orbit TPS Inspection & EVA Tile Repair	20	68	130								X													X								X
AC	Orbiter Workforce	0	5	37																		X						X					X
RE/RP	Orbiter TPS Hardening	0	28	34			X																										
AC	Orbiter/GFE		7	4																													
AC	Orbiter Contingency		8	12																													
RE/RP	Orbiter Certification / Verification	0	47	26		X		X	X										X			X								X			X
RE/RP	External Tank Items (Camera, Bipod Ramp, etc.)	11	114	94	X								X							X													
RE/RP	SRB Items (Bolt Catcher, ETA Ring Invest., Camera)	1	8	26					X				X					X															X
RE/RP	Ground Camera Ascent Imagery Upgrade	8	40	58							X								X	X					X								
AC/RE	KSC Ground Operations Workforce		32	36						X									X	X					X								X
RE/RP	Other (System Intgr. JBOSC Sys, SSME Tech Assess)	0	67	177		X	X	X	X																	X	X	X	X				X
RE/RP	Stafford - Covey Team	0	3	1																													X
		(2)	(3)																														
	Other RTF Related* **																																
	NASA Engineering and Safety Center (NESC)		45	77																						X	X	X					

RE = Reestimated Item; RP = Rephased; AC = Added Content

(1) The "Total SSP RTF Activities" budget line identified above represents an update to the estimates reflected in NASA's letters to the committees dated January 30, 2004. This update includes added scope of work and improved estimates. Although there is a greater level of technical maturity, requirements are still evolving, and cost estimates for those activities are dynamic and are still under evaluation to confirm the estimated cost and associated out-year phasing. Congress will be kept informed as we refine these requirements and associated cost estimates.

(2) In the last RTF update, NASA assumed an estimate of $94M in budget authority for FY 2003 could be needed. Since that time it became apparent that $52M of FY 2003 planned work and associated cost were carried into FY 2004.

(3) The updated FY 2004 RTF cost estimate of $465M includes $319M of activities that have been approved for implementation. The remaining $146M of RTF activities are pending approval. As soon as these additional activities are definitized, they will be shared with Congress.

*These estimates could change due to improved estimates, additional tasks, and added scope as we better understand the implementation of RTF recommendations.

**Cost estimates for FY 2005 and beyond will be refined as the Program comes to closure on RTF technical solutions and the RTF plan is finalized.

***The NASA Engineering and Safety Center (NESC) is funded through NASA's Corporate G&A. The NESC at NASA's Langley Research Center in Hampton, Va., provides comprehensive examination of all NASA programs and projects. The Center thus provides a central location to coordinate and conduct robust engineering and safety assessment across the entire Agency.

The following Chart 1 and associated Table 2 show the relative maturity of the estimates for known RTF content based on PRCB approval of technical content. Actions approved with PRCB directives issued have mature cost estimates, while those with control board actions in work are less mature. Both the content and cost estimates for RTF work that has not yet been reviewed by the control board are very preliminary and subject to considerable variation. The total cost for RTF will not be known until completion of the first Shuttle missions to the Space Station in FY 2005.

Cost estimates for FY 2005 and beyond will be refined as the Space Shuttle Program comes to closure on RTF technical solutions and the RTF plan is finalized. NASA expects that by late fall of 2004, a better understanding of the FY 2005 financial situation will be developed.

While all critical RTF work is continued, NASA will address any remaining FY 2005 shortfall first by seeking lower-priority offsets within the Shuttle Program, then by identifying funds for transfer from lower-priority or under-performing activities outside the Program.

Chart 1. July 2004 Return to Flight Estimates

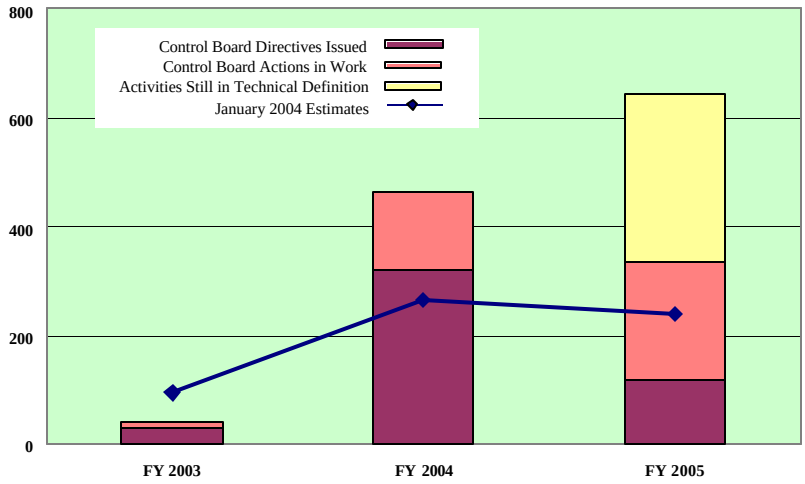

	FY 2003	FY 2004	FY 2005
Estimates Published in January 2004	***94***	***265***	***238***
Total Board Actions/Pending Board Action:	**42**	**465**	**643**
Value of Control Board Directives Issued	**31**	**319**	**117**
Estimates for Control Board Actions Work	**11**	**146**	**217**
Estimates for Activities Still in Technical Definition			**309**

Table 2. July 2004 Return to Flight Estimates

	FY 2003	FY 2004	FY 2005
TOTAL RTF	42	465	643
RTF Activities – Control Board Directive	31	319	117
RTF Activities – Been to Control Board/No Directive	11	146	217
RTF Activities – In Review Process	0	0	309
RTF Activities – Control Board Directive	31	319	117
Orbiter RCC Inspections & Orbiter RCC-2 Shipping Spares	2	38	0
On-orbit TPS Inspection & EVA Tile Repair	20	68	34
Orbiter TPS Hardening		28	1
Orbiter Certification/Verification		47	
Orbiter Other (GFE/Contingency)		15	16
External Tank Items (Camera, Bipod Ramp, etc.)		6	1
SRB Items (Bolt Catcher, ETA Ring Invest., Camera, other)	1	8	
Ground Camera Ascent Imagery Upgrade	8	40	3
Rudder Speed Brakes		5	11
Other (System Intgr. JB OSC Sys., Full Cost, Additional FTEs, etc.)		62	50
Stafford-Covey Team	0	3	1
RTF Activities – Been in Central Board/No Directive	11	146	217
Orbiter Workforce (Ground Ops)		5	5
External Tank Items (Camera, Bipod Ramp, etc.)	11	109	92
Ground Camera Ascent Imagery Upgrade			52
Orbiter Workforce (Ground Ops, USA, Boeing, Logistics Eng.)			32
KSC Ground Ops Workforce		32	36
RTF Activities – In Review Process	0	0	309
Orbiter RCC Inspections & Orbiter RCC-2 Shipsets Spares			
On-orbit TPS Inspection & EVA Tile Repair			
Orbiter TPS Hardening			
Orbiter Certification/Verification			
SRB Items (Bolt Catcher, Camera, other)			
Ground Camera Ascent Imagery Upgrade			
Increased SSME Testing			
SSME CAIB Impacts			
Other (System Intgr. JB OSC Sys., Full Cost, Additional FTEs, etc.)			

Columbia Accident Investigation Board

Recommendation 3.3-2

Initiate a program designed to increase the Orbiter's ability to sustain minor debris damage by measures such as improved impact-resistant Reinforced Carbon-Carbon and acreage tiles. This program should determine the actual impact resistance of current materials and the effect of likely debris strikes. [RTF]

BACKGROUND

The STS-107 accident demonstrated that the Space Shuttle Thermal Protection System (TPS) design is vulnerable to impact. Identification of all sources of debris and potential modifications to the design of the TPS, referred to as Orbiter hardening, are expected to make the Orbiter less vulnerable to this risk.

NASA IMPLEMENTATION

A Program Requirements Control Board (PRCB) action authorized assessment of potential TPS modifications for Orbiter hardening. As part of this action, NASA is defining candidate redesigns that will reduce impact damage risk to vulnerable TPS areas and is developing an assessment plan for other steps to improve Orbiter hardening.

Initially, a Space Shuttle Program (SSP)-chartered planning team identified 17 specific design options that fell into eight broad design families. Further testing and analysis, combined with new data from the ongoing *Columbia* Accident Investigation Board investigation, led NASA to hone its criteria for defining and prioritizing Orbiter hardening options. Each TPS enhancement option was evaluated against the damage history, vulnerability, and criticality potential of the area and the potential safety, operations, and performance benefits of the enhancement. The team focused on those changes that achieve the following goals: increased impact durability for ascent and micrometeoroid and orbital debris impacts; increased temperature capability limits; reduced leak paths; added entry redundancy; increased contingency trajectory limits; and reduced contingency operations. These candidates were presented to the SSP PRCB, which prioritized them, eliminating seven from further consideration. Some of the remaining ten options required breaking down into smaller elements. The result was a final set of 15 Orbiter hardening options grouped into eight different design families. These results were presented to the PRCB in June 2003, including forward action plan recommendations for the revised design families (see table 3.3-2-1).

The SSP has established a plan to determine the impact resistance of both Reinforced Carbon-Carbon (RCC) and tiles in their current configurations. The SSP is also working to identify all debris sources from all Space Shuttle elements including the External Tank (ET), the Solid Rocket Boosters, and the Orbiter. Additional detail on this work can be found in SSP-14, Critical Debris Size. The SSP Systems Engineering and Integration Office is providing transport analyses to identify potential velocity, impact location, and impact angle for the debris sources. In parallel, an impact test program is being conducted to determine the impact resistance of RCC and tile using various debris sources under conditions that encompass the full range of parameters provided by the transport analysis. The data generated from this testing will be used to correlate an accurate set of analytical models to further understand the damage threat. Further testing will be conducted on specific Orbiter insulation configurations that were identified during the investigation, including the leading edge structural subsystem access panels (located directly behind the RCC) and the edge tile configuration of the main landing gear doors (MLGD).

STATUS

NASA has fully complied with the *Columbia* Accident Investigation Board (CAIB) Recommendation 3.3-2 and initiated an Orbiter hardening program to increase the Orbiter's capability to sustain minor debris damage. Orbiter hardening options that are constraints to return to flight (RTF) have either been implemented or are being implemented at this time. Other feasible hardening options that are approved by the SSP will be implemented on the vehicle when opportunities become available.

For each of the redesign options, NASA is developing a detailed feasibility assessment that will include cost and schedule for either full implementation or for the next proposed phase of the project. The Orbiter hardening options have been grouped into three categories based on the implementation phasing. The three phases are defined as follows:

Family	Redesign Proposal	Phase
WLESS	"Sneak Flow" Front Spar Protection (RCC #5 – 13)	I
	"Sneak Flow" Front Spar Protection (RCC # 1 – 4, 4 – 22)	II
	Lower Access Panel Redesign/BRI 20 Tile Implementation	III
	Insulator Redesign	III
	Robust RCC	III
Landing Gear and ET Door Thermal Barriers	Main Landing Gear Door Corner Void	I
	Main Landing Gear Door Enhanced Thermal Barrier Redesign	II
	Nose Landing Gear Door Thermal Barrier Material Change	III
	External Tank Door Thermal Barrier Redesign	III
Vehicle Carrier Panels – Bonded Stud Elimination	Forward RCS Carrier Panel Redesign – Bonded Stud Elimination	I
Tougher Lower Surface Tiles	Tougher Periphery (BRI 20) Tiles around MLGD, NLGD, ETD, Window Frames, Elevon Leading Edge and Wing Trailing Edge	III
	Tougher Acreage (BRI 8) Tiles and Ballistics SIP on Lower Surface	III
Instrumentation	TPS Instrumentation	III
Elevon Cove	Elevon Leading Edge Carrier Panel Redesign	III
Tougher Upper Surface Tiles	Tougher Upper Surface Tiles	III
Vertical Tail	Vertical Tail AFSI High Emittance Coating	III

Table 3.3-2-1. Eight Design Families Targeted for Enhancement.

Phase I options will be implemented before RTF. Phase II options will be implemented as soon as opportunities arise. Phase III consists of potential long-term options that will increase the Orbiter's impact resistance capability. These will be implemented as material development is completed and opportunities become available.

Phase I work includes elimination of MLGD corner void, elimination of Forward Reaction Control System (FRCS) bonded studs, and wing spar protection for the most vulnerable RCC panels 5 through 13. The interim MLGD corner void elimination modification was completed on Orbiter Vehicle (OV)-103 and OV-104; this modification will improve thermal protection in the forward and aft outboard corners of the MLGD cavity. OV-105 will receive the same interim modification unless NASA is able to proceed to the planned final modification with redundant thermal barriers. FRCS-bonded studs will be replaced with mechanically fastened studs for all three vehicles. This will ensure stronger attachment points for key carrier panels. This replacement is complete on OV-103. OV-104 and OV-105 are scheduled to receive the same modification in the next few months. The design for wing spar protection modification behind RCC panels 5 through 13 is complete. This modification will increase the Orbiter's ability to successfully enter the Earth's atmosphere with minor wing leading edge (WLE) damage. OV-103 and OV-104 will initially receive this modification. On OV-105, all 22 RCC panel locations on both wings will receive wing spar protection during the current Orbiter Major Modification.

Phase II work includes MLGD-enhanced thermal barrier redesign and wing spar protection for all remaining RCC panels. The designs to modify the wing spar protection behind RCC panels 1 through 4 and 14 through 22 on OV-103 and OV-104 will be finalized at the end of August 2004.

All Phase III options are under review by the SSP at this time with two exceptions that have been approved and are in development: toughened lower and upper surface tiles and Robust RCC. Work is continuing on the analysis and preliminary design phase for these two items and will be completed by January 2005. A feasibility study of the Robust RCC option will conclude in the June/July 2004 timeframe. SSP has approved the proposal to continue into formulation phase of the Robust RCC option, which will conclude in early 2005.

NASA's Orbiter Debris Impact Assessment Team is making significant progress in determining the actual damage resistance of current materials. Testing is nearly complete to establish the material properties of tile, RCC, and potential debris that may impact the TPS. These data will help NASA build models that determine damage thresholds. Impact testing of foam against tile is more than 75% complete. Ice impact testing against tile is 25% complete. The first series of ice impacts against RCC is scheduled to begin in early August. Work on the analytical models is progressing on schedule.

Damage assessment tests are ongoing at the Langley Research Center in Virginia. These tests are designed to show the structural strength of RCC after impact. Combined with thermal data from ablative testing of damaged RCC coupons at the Johnson Space Center Arc Jet Facility, the Langley data will allow development of a set of analytical models that will determine the amount of RCC damage that must be repaired to return safely to Earth. Thermal models and testing to predict damaged tile capabilities are also in work.

Initial tests of ablator material against tile showed unacceptable levels of damage; however, there is no operational history of ablator impacts, and the SSP believes that the Shuttles can be certified for no release of ablators during ascent. Consistent with these findings, SSP is formulating a new requirement that will allow no release of ablator or metal debris.

FORWARD WORK

NASA will continue to implement the plan according to the schedule below. Decision packages for each redesign option will be brought to the PRCB for disposition. NASA will review its response to this CAIB recommendation with the Stafford Covey Return to Flight Task Group.

SCHEDULE

Responsibility	Due Date	Activity/Deliverable
SSP	Jun 03 (Completed)	Initial plan reported to PRCB
SSP	Aug 03 (Completed)	Initial Test Readiness Review held for Impact Tests
SSP	Nov 03 (Completed)	Phase I Implementation Plans to PRCB (MLGD corner void, FRCS carrier panel redesign—bonded stud elimination, and WLE impact detection instrumentation)
SSP	Jan 04 (Completed)	Phase II Implementation Plans to PRCB (WLE front spar protection and horse collar redesign, MLGD redundant thermal barrier redesign)
SSP	Jul 04	Conclude feasibility study of the Robust RCC option
SSP	Aug 04	Finalize designs for modified wing spar protection between RCC panels 1–4 and 14–22 on OV-103 and OV-104
SSP	Jan 05	Complete analysis and preliminary design phase for upper and lower surface tiles and robust RCC
SSP	TBD	Phase III Implementation Plans to PRCB (include robust RCC, ET door thermal barrier redesign, elevon cove leading edge carrier panel redesign, etc.)

Columbia Accident Investigation Board

Recommendation 3.3-1

Develop and implement a comprehensive inspection plan to determine the structural integrity of all Reinforced Carbon-Carbon system components. This inspection plan should take advantage of advanced non-destructive inspection technology. [RTF]

Note: The Stafford Covey Return to Flight Task Group held a plenary session on April 15, 2004, in Houston, Texas. NASA's progress toward answering this recommendation was reviewed and the Task Group agreed that the actions taken were sufficient to conditionally close this recommendation.

BACKGROUND

Current on-vehicle inspection techniques are inadequate to assess the structural integrity of Reinforced Carbon-Carbon (RCC) components and attachment hardware. There are two aspects to the problem: (1) how we assess the structural integrity of RCC components and attach hardware throughout their service life, and (2) how we verify that the flight-to-flight RCC mass loss caused by aging does not exceed established criteria. At present, structural integrity is assured by wide design margins; comprehensive nondestructive inspection (NDI) is conducted only at the time of component manufacture. Mass loss is monitored through a destructive test program that periodically sacrifices flown RCC panels to verify by test that the actual material properties of the panels are within the predictions of the mission life model.

The RCC NDI techniques currently certified include X-ray, ultrasound (wet and dry), eddy current, and computer-aided tomography (CAT) scan. Of these, only eddy current can be done without removing components from the vehicle. While eddy current testing is useful for assessing the health of the RCC outer coating and detecting possible localized subsurface oxidation and mass loss, it reveals little about a component's internal structure. Since the other certified NDI techniques require hardware removal, each presents its own risk of unintended damage. Only the vendor is fully equipped and certified to perform RCC X-ray and ultrasound. Shuttle Orbiter RCC components are pictured in figure 3.3-1-1.

NASA IMPLEMENTATION

The Space Shuttle Program (SSP) is pursuing inspection capability improvements using newer technologies to allow comprehensive NDI of the RCC without removing it from the vehicle. A technical interchange meeting held in May 2003 included NDI experts from across the country. This meeting highlighted five techniques with potential for near-term operational deployment: (1) flash thermography, (2) ultrasound (wet and dry), (3) advanced eddy current, (4) shearography, and (5) radiography. The SSP must still assess the suitability of commercially available equipment and standards for flight hardware. Once an appropriate in-place inspection method is fielded, the SSP will be able to positively verify the structural integrity of RCC hardware without risking damage by removing the hardware from the vehicle.

NASA is committed to clearing the RCC by certified inspection techniques before return to flight. The near-term plan calls for removing all RCC components and returning them to the vendor for comprehensive NDI. For the long term, a Shuttle Program Requirements Control Board (PRCB) action was assigned to review inspection criteria and NDI techniques for all Orbiter RCC nose cap, chin panel, and wing leading edge (WLE) system components. Viable NDI candidates were reported to the PRCB in January 2004, and specific options were chosen.

RCC structural integrity and mass loss estimates will be validated by off-vehicle NDI of RCC components and destructive testing of flown WLE panels. All WLE panels, seals, nose caps, and chin panels will be removed from Orbiter Vehicle (OV)-103, OV-104, and OV-105 and returned to the vendor's Dallas, Texas, facility for comprehensive NDI. Inspections will include a mix of ultrasonic, X-ray, and eddy current techniques. In addition, NASA has introduced off-vehicle flash thermography for all WLE panels and accessible nose cap and chin panel surfaces; any questionable components will be subjected to CAT scan for further evaluation. Data collected will be used to support development of future in-place NDI techniques.

The health of RCC attach hardware will be assessed using visual inspections and NDI techniques appropriate to the

critical flaw size inherent in these metallic components. This NDI will be performed on select components from OV-103 and OV-104. Destructive evaluation of select attach hardware from both vehicles will also be undertaken. Additional requirements will be established, if necessary, upon completion of initial inspections.

STATUS

Advanced On-Vehicle NDI: Near-term advanced NDI technologies were presented to the PRCB in January 2004. Thermography, contact ultrasonics, eddy current, and radiography were selected as the most promising techniques to be used for on-vehicle inspection that could be developed in less than 12 months. The PRCB approved the development of these techniques.

OV-104: The nose cap, chin panel, and all WLE RCC panel assemblies were removed from the vehicle and shipped to the vendor for complete NDI. The data analysis from this suite of inspections was completed in March 2004. Vendor inspection of all WLE panels and the analysis of the final panel are complete. Eddy current inspections of the nose cap and chin panel were completed before these components were removed, and the results compare favorably to data collected when the components were manufactured, indicating mass loss and coating degradation are within acceptable limits. Off-vehicle infrared thermography inspection at KSC is being performed to compare with vendor NDI. All findings will be cleared on a case-by-case basis through the KSC Material Report (MR) system.

OV-103: As part of the OV-103 Orbiter maintenance down period (OMDP), WLE panels were removed from the vehicle, inspected by visual and tactile means, and then shipped to the vendor for NDI. The analysis of the inspection results will be completed in May 2004. X-ray inspection of the RCC nose cap, which was already at the vendor for coating refurbishment, revealed a previously undocumented 0.025 in. × 6 in. tubular void in the upper left-hand expansion seal area. While this discrepancy does not meet manufacturing criteria, it is located in an area of the panel with substantial design margin (900% at end of panel life) and is acceptable for flight. The suite of inspections performed on the OV-103 nose cap has confirmed the Orbiter's flight worthiness and, to date, revealed nothing that might call into question the structural integrity of any other RCC component. Off-vehicle infrared thermography inspection at KSC is being performed for comparison with vendor NDI. All findings will be cleared on a case-by-case basis through the KSC MR system.

OV-105: All OV-105 RCC components (WLE, nose cap, and chin panel) will be removed and inspected during its OMDP, which began in December 2003. Off-vehicle infrared thermography inspection at KSC is being performed to compare with vendor NDI. All findings will be cleared on a case-by-case basis through the KSC MR system.

RCC Structural Integrity: Three flown RCC panels with 15, 19, and 27 missions respectively have been destructively tested to determine actual loss of strength due to oxidation. The testing of this flown hardware to date confirms the conservativeness of the RCC material A-Allowables values used for design and projected mission life.

RCC Attach Hardware: The RCC Problem Resolution Team was given approval for a plan to evaluate attach hardware through NDI and destructive testing. Detailed hardware NDI inspection (dye penetrant, eddy current) to address environmental degradation (corrosion and embrittlement) and fatigue damage concerns have been performed on selected OV-103/104 WLE panels in the high heat and fatigue areas. No degradation or fatigue damage concerns were found.

FORWARD WORK

OV-104 RCC system readiness for flight will be based on results of ongoing WLE, nose cap, and chin panel inspections and NDI.

The near-term advanced on-vehicle NDI techniques are in development, as are process and standards for their use. Decisions on long-term NDI techniques (those requiring more than 12 months to develop) will be made after inspection criteria are better established. Data storage, retrieval, and fusion with CATIA CAD models is planned to enable easy access to NDI data for archiving and disposition purposes.

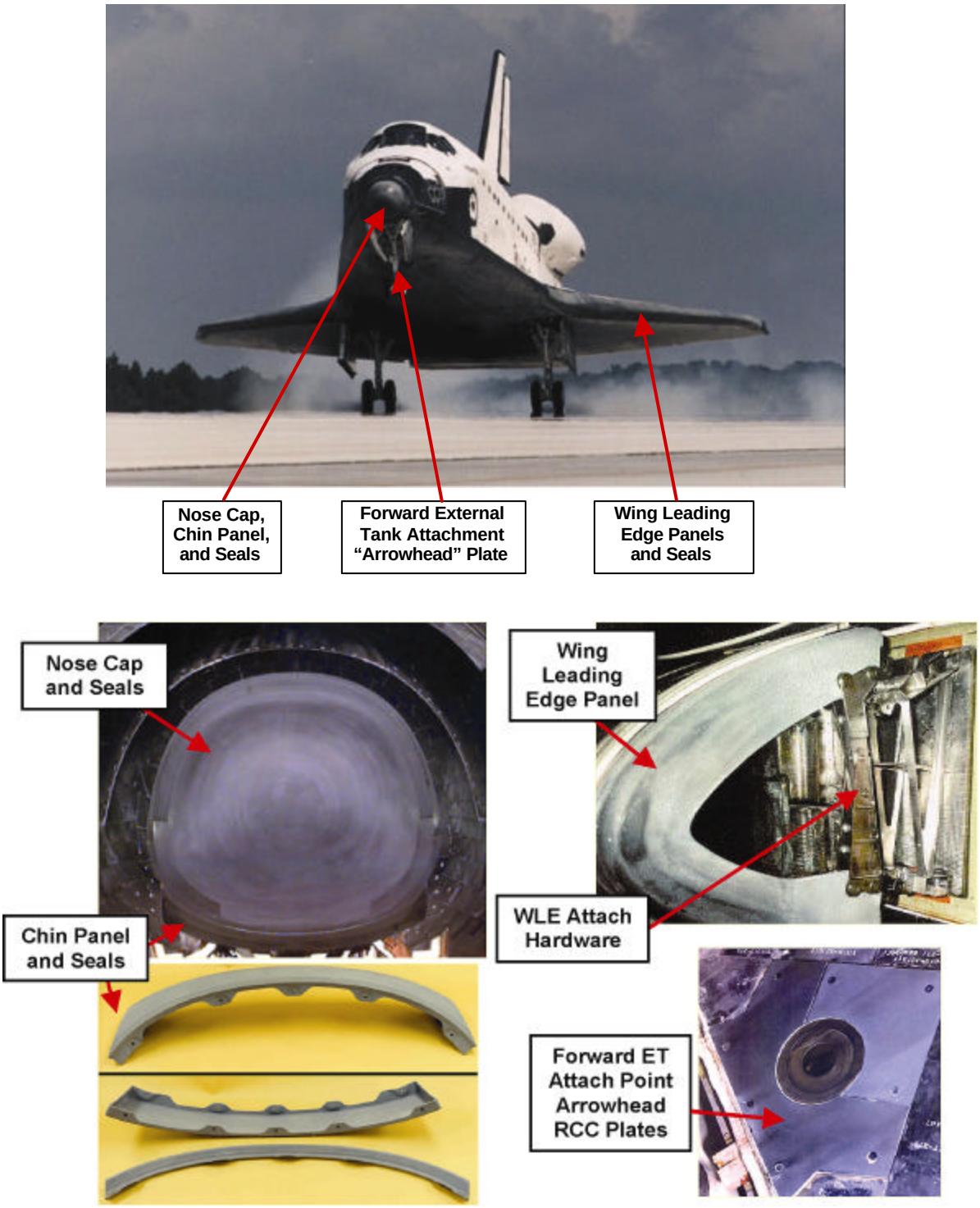

Figure 3.3-1-1. Shuttle Orbiter RCC components.

SCHEDULE

Responsibility	Due Date	Activity/Deliverable
SSP	Sep 03 (Completed)	OV-104 WLE RCC NDI analysis complete
SSP	Oct 03 (Completed)	Completion of NDI on OV-104 WLE attach hardware
SSP	Dec 03 (Completed)	OV-103 chin panel NDI
SSP	Jan 04 (Completed)	Report viable on-vehicle NDI candidates to the SSP
SSP	Jan 04 (Completed)	Completion of NDI on OV-103 WLE attach hardware
SSP	Feb 04 (Completed)	OV-103 nose cap NDI analysis
SSP	Feb 04 (Completed)	OV-104 chin panel NDI analysis
SSP	Apr 04 (Completed)	OV-104 nose cap NDI analysis
SSP	Jul 04	OV-103 WLE RCC NDI analysis

Columbia Accident Investigation Board

Recommendation 6.4-1

For missions to the International Space Station, develop a practicable capability to inspect and effect emergency repairs to the widest possible range of damage to the Thermal Protection System, including both tile and Reinforced Carbon-Carbon, taking advantage of the additional capabilities available when near to or docked at the International Space Station.

For non-Station missions, develop a comprehensive autonomous (independent of Station) inspection and repair capability to cover the widest possible range of damage scenarios.

Accomplish an on-orbit Thermal Protection System inspection, using appropriate assets and capabilities, early in all missions.

The ultimate objective should be a fully autonomous capability for all missions to address the possibility that an International Space Station mission fails to achieve the correct orbit, fails to dock successfully, or is damaged during or after undocking. [RTF]

BACKGROUND

The Board determined, and NASA accepts, that an on-orbit Thermal Protection System (TPS) inspection and repair capability is an important part of the overall TPS risk mitigation plan. Currently, Shuttle flights are planned only to the International Space Station (ISS), and, as outlined in the Vision for Space Exploration, NASA will retire the Space Shuttle fleet following assembly of the ISS.

There are additional risks associated with creating and deploying a fully autonomous inspection capability without ISS resources. Therefore, NASA has decided to focus its development of TPS inspection and repair on those capabilities that enhance the Shuttle's suite of assessment and repair tools while taking full advantage of ISS resources.

The Space Flight Leadership Council has directed the Space Shuttle Program (SSP) to focus its efforts on developing and implementing inspection and repair capability appropriate for the first return to flight missions using ISS resources as required. NASA will focus its efforts on mitigating the risk of multiple failures (such as an ISS mission failing to achieve the correct orbit or dock successfully, or the Orbiter being damaged during or after undocking and suffering critical TPS damage) through maximizing the Shuttle's ascent performance margins to achieve ISS orbit, using the docked configuration to maximize inspection and repair capabilities, and flying protective attitudes following undocking from the ISS. However, NASA will continue to analyze the relative merit of different approaches to mitigating the risks identified by the *Columbia* Accident Investigation Board.

This approach to avoiding unnecessary risk has also led NASA to recognize that autonomous missions carry a higher risk than ISS missions. A brief summary of the additional risks associated with autonomous missions is described below:

1. *Lack of Significant Safe Haven*. The inability to provide a "safe haven" while inspection, repair, and potential rescue are undertaken creates additional risk in autonomous missions. NASA estimates that a typical Space Shuttle flight crew of seven astronauts could stay aboard the ISS for up to 68 days if required to do so by an emergency situation on the Space Shuttle. This safe haven capability allows the flight crew and ground teams to consider all options, determine the best course of action, take the time required to understand the cause of the failure and affect repairs, or send an appropriate rescue vehicle with the right equipment to bring the crew home. For an autonomous mission, however, the crew would be limited to an additional on-orbit stay of no more than two to four weeks, depending on how remaining consumables are rationed.

2. *Unprecedented Double Workload for Ground Launch and Processing Teams*. Because the rescue window for an autonomous mission is only two to four weeks, NASA would be forced to process two vehicles for launch simultaneously to ensure timely rescue capability. Any processing delays to one vehicle would require a delay in the second vehicle. The launch countdown for the second launch would begin before the actual launch of the first vehicle.

This short time period for assessment is a serious concern. It would require two highly complex processes to be carried out simultaneously, and it would not permit thorough assessment by the launch team, the flight control team, and the flight crew.

3. *No Changes to Cargo or Vehicle Feasible*. Because of the very short timeframe between the launch of the first vehicle and the requirement for a rescue flight, no significant changes could reasonably be made to the second vehicle. This means that it would not be feasible to change the cargo on the second Space Shuttle to support a repair to the first Shuttle, add additional rescue hardware, or make vehicle modifications to avoid whatever situation caused the need for a rescue attempt in the first place. Not having sufficient time to make the appropriate changes to the rescue vehicle or the cargo could add significant risk to the rescue flight crew or to crew transfer. The whole process would be under acute schedule pressure and undoubtedly many safety and operations waivers would be required.

4. *Rescue Mission*. Space Shuttles routinely dock with the ISS, and Soyuz evacuation procedures are supported by extensive training, analysis, and documentation. A rescue from the ISS, with multiple hatches, airlocks, and at least one other vehicle available (Soyuz), is much less complex and risky than that required by a stranded Space Shuttle being rescued by a second Space Shuttle. When NASA first evaluated free-space transfer of crew, which would be required to evacuate the Shuttle in an autonomous mission, many safety concerns were identified. This analysis would need to be done again, in greater detail, to identify all of the potential issues and safe solutions.

5. *TPS Repair*. NASA's current planned TPS repair method for an ISS-based repair uses the ISS robotic arm to stabilize an extravehicular activity (EVA) crew person over the worksite. This asset is not available for an autonomous mission, so NASA would have to finish development of an alternate method for stabilizing the crewmember. Such a concept is in development targeting 2006, when it will be needed for ISS-based repairs also. Solving this problem before 2006 represents a challenging undertaking.

NASA IMPLEMENTATION

Note: the remainder of this section refers to inspection and repair during nominal Shuttle missions to the ISS.

Taken together, TPS inspection and repair represent one of the most challenging and extensive return to flight tasks. NASA's near-term TPS risk mitigation plan calls for: Space Shuttle vehicle modifications to eliminate the liberation of critical debris; fielding improved ground and vehicle-based cameras and impact sensors for debris detection and damage assessment; on-orbit TPS surveys using the SRMS and Space Station Remote Manipulator System (SSRMS) cameras; and ISS crew observations during Shuttle approach and docking. Techniques for repairing tile and Reinforced Carbon-Carbon (RCC) by EVA are under development. The combination of these capabilities will help to ensure a low probability that critical damage will be sustained, while increasing the probability any damage that does occur can be detected and the consequences mitigated in flight.

NASA's long-term TPS risk mitigation steps will refine and improve all elements of the near-term plan, ensuring an effective inspection and repair capability.

Inspection

The first step in structuring effective inspections is to establish baseline criteria for resolving critical damage. NASA has defined preliminary critical damage inspection criteria that form the basis for TPS inspection and repair development work. The detailed criteria are evolving based on recent and ongoing tests and analyses. Our goal is to define damage thresholds for all TPS zones below which no repair is required before entry. These criteria are a function of the damage surface dimensions, depth, and entry heating at each location on the vehicle. The preliminary criteria are shown in figure 6.4-1-1.

A combination of Shuttle and ISS assets will be capable of imaging critical TPS damage in all areas. The Orbiter

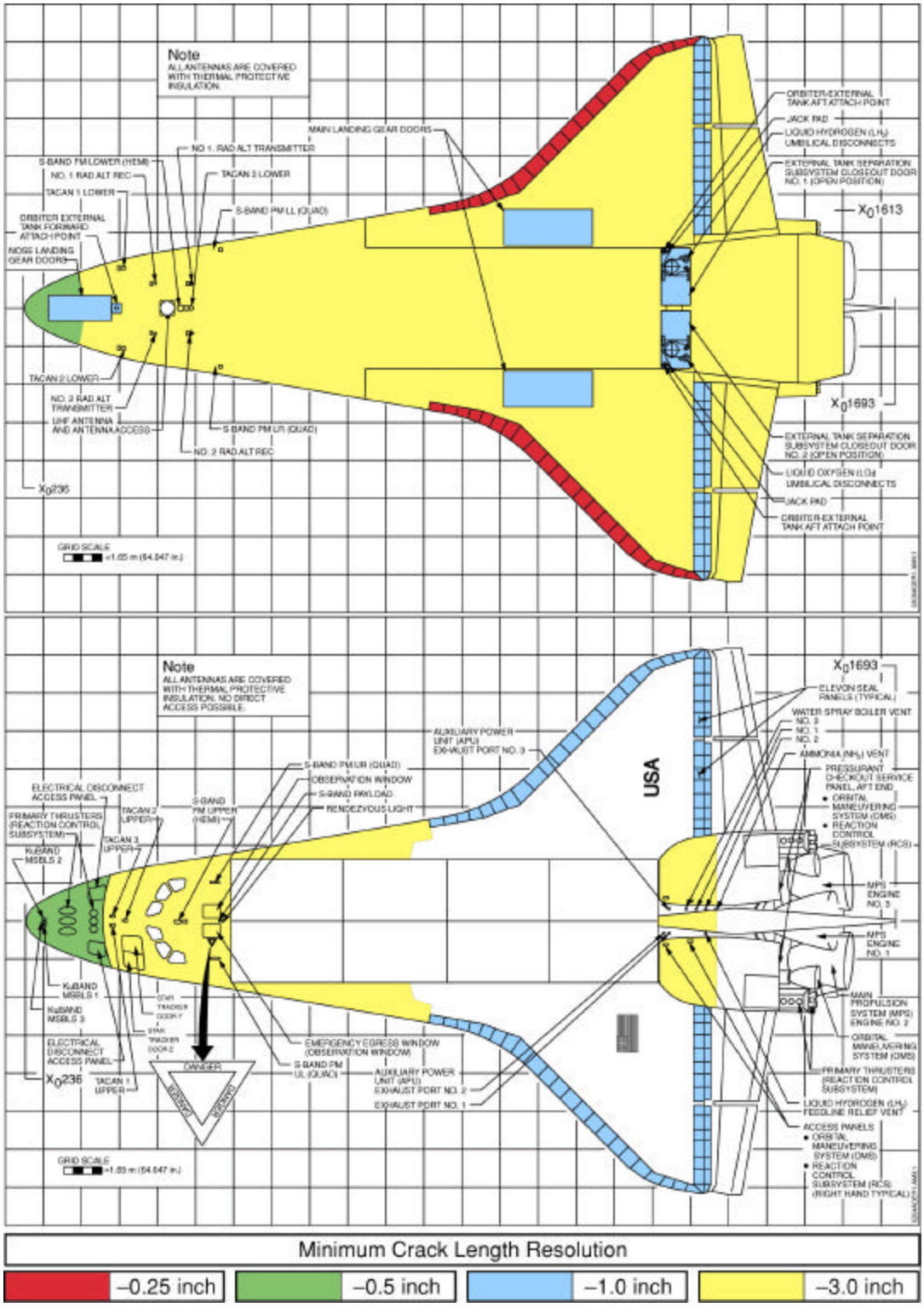

Figure 6.4-1-1. Preliminary TPS damage inspection criteria.

Boom Sensor System (OBSS) Project is currently developing a sensor system that will be flown on the first flight and used to inspect the wing leading edge (WLE) and the nose cap. The system will also be used to inspect and measure the depth of any critical TPS damage that other inspection devices, such as Station-based cameras, have detected. The OBSS consists of sensors on the end of a boom system that is launched installed on the starboard sill. The boom (figure 6.4-1-2) will be used in conjunction with the SRMS to inspect the WLE RCC and nose cap prior to docking with ISS. After the Orbiter is docked to ISS, the OBSS will be used to further inspect any suspect areas on the Orbiter. In addition, the boom will have the capability to support an EVA crewmember if needed to support the inspection activities.

In February 2004, the SSP established an Inspection Tiger Team to review all inspection capabilities and to develop a plan to most effectively integrate these capabilities before return to flight. The tiger team succeeded in producing a comprehensive in-flight inspection, imagery analysis, and damage assessment strategy that will be implemented through the existing flight-planning process. The best available cameras and laser sensors suitable for detecting critical damage in each TPS zone will be used in conjunction with digital still photographs taken from ISS during the Orbiter's approach. The pitch-around maneuver required to facilitate this imagery has been developed and is pictured in figure 6.4-1-3. Shuttle crews are currently training to fly this maneuver. The tiger team strategy also laid the foundation for a more refined impact sensor and imagery system following the first two successful flights. This plan is being enhanced to clearly establish criteria for transitioning from one suite of

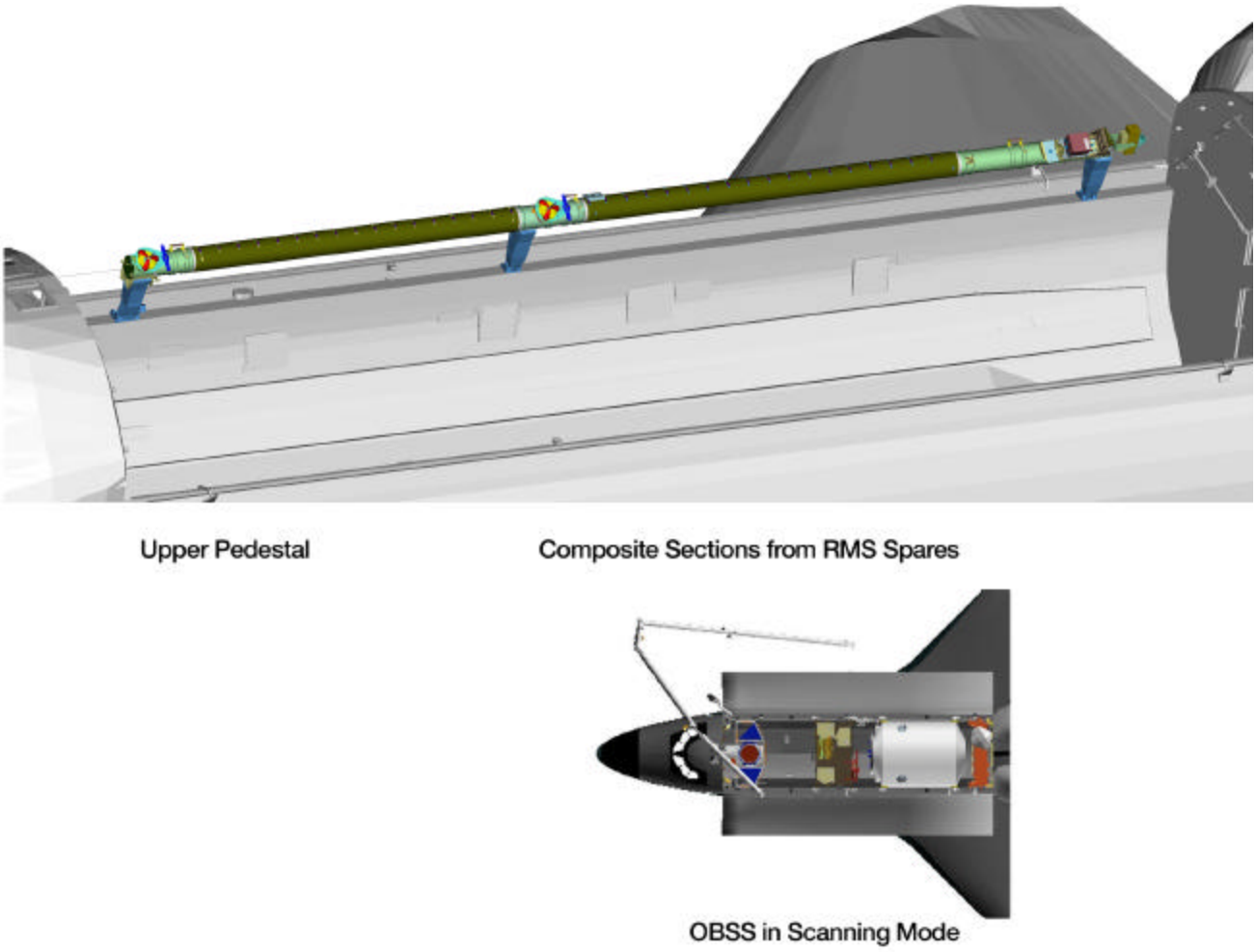

Figure 6.4-1-2. Orbiter Boom Sensor System (OBSS).

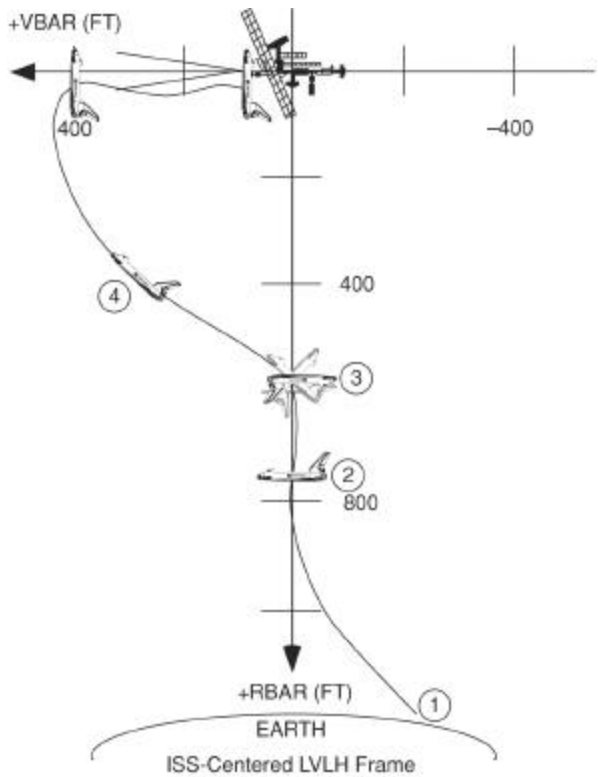

	EVENT
1	1000 FT RANGE RATE GATE (RDOT = –1.3 FPS) TRANSITION TO LOWZ
2	ORBITER ACQUIRES RBAR
3	600 FT (RDOT = –0.1 FPS BEGIN 1 DEG/SEC POSITIVE PITCH AUTO MNVR: MODE TO FREE DRIFT TO PROTECT ISS FROM ORBITER PLUME LOADS AND CONTAMINATION
	ISS PHOTOGRAPHIC SURVEY OPPORTUNITY FROM U.S. LAB WINDOW
	RESUME ATTITUDE HOLD AS ORBITER RETURNS TO RBAR ATTITUDE AND PILOT BACK TO NOMINAL APPROACH PROFILE
4	TORVA (TWICE ORBITAL RATE RBAR TO VBAR APPROACH)

Figure 6.4-1-3. Orbiter pitch-around for inspection and approach to ISS.

inspection capabilities to another, and the timeline for these transitions.

Along with the work of the tiger team, the Shuttle Engineering and Integration Office began development of a TPS Readiness Determination Operations Concept. Most critically, this document will specify the process for collecting, analyzing, and applying the diverse inspection data in a way that ensures effective and timely mission decision-making.

Repair

TPS Repair Access

NASA has developed a combined SRMS and SSRMS "flip around" operation to allow TPS repairs while the Shuttle is docked to the ISS; this operation involves turning the Shuttle into a belly-up position that provides arm access to the repair site. As depicted in figure 6.4-1-4, the SRMS grapples the ISS while docked. The docking mechanism hooks are then opened, and the SRMS rotates the Orbiter into a position that presents the lower surface to the ISS. The EVA crew then works from the SSRMS, with the SSRMS used to position the crewmember to reach any TPS surface needing repair. After the repair, the SRMS maneuvers the Orbiter back into position and reattaches the Orbiter to the docking mechanism. This technique provides access to all TPS surfaces without the need for new equipment. The procedure will work through ISS flight 1J (which will add the Japanese Experiment Module to the ISS on orbit assembly). After ISS flight 1J, the ISS grapple fixture required to support this technique will be blocked, and new TPS repair access techniques will need to be developed.

RCC Repair

The main challenges to repairing RCC are maintaining a bond to the RCC coating during entry heating and meeting very small edge step requirements. The RCC repair project is pursuing three complementary repair concepts that together will enable repair of a wide variety of potential RCC damage: Plug Repair; Rigid Wrap Repair; and Crack Repair. Plug Repair consists of an insert intended to repair holes in the WLE with sizes from 0.5 in. to 4 in. in diameter. The Rigid Wrap is a complete overwrap for a given RCC panel intended to repair any catastrophic damage detected on a given panel (figure 6.4-1-5). Crack Repair uses a material application intended to fill cracks and small holes in the WLE. All three concepts are expected to have limitations in terms of damage characteristics, damage location, and testing/analysis. Schedules for design, development, testing, evaluation, and production of these concepts are in work.

This effort is still in the concept definition phase and is much less mature than the tile repair material study. NASA is evaluating concepts across six NASA centers, 11 contractors, and the United States Air Force Research Laboratory.

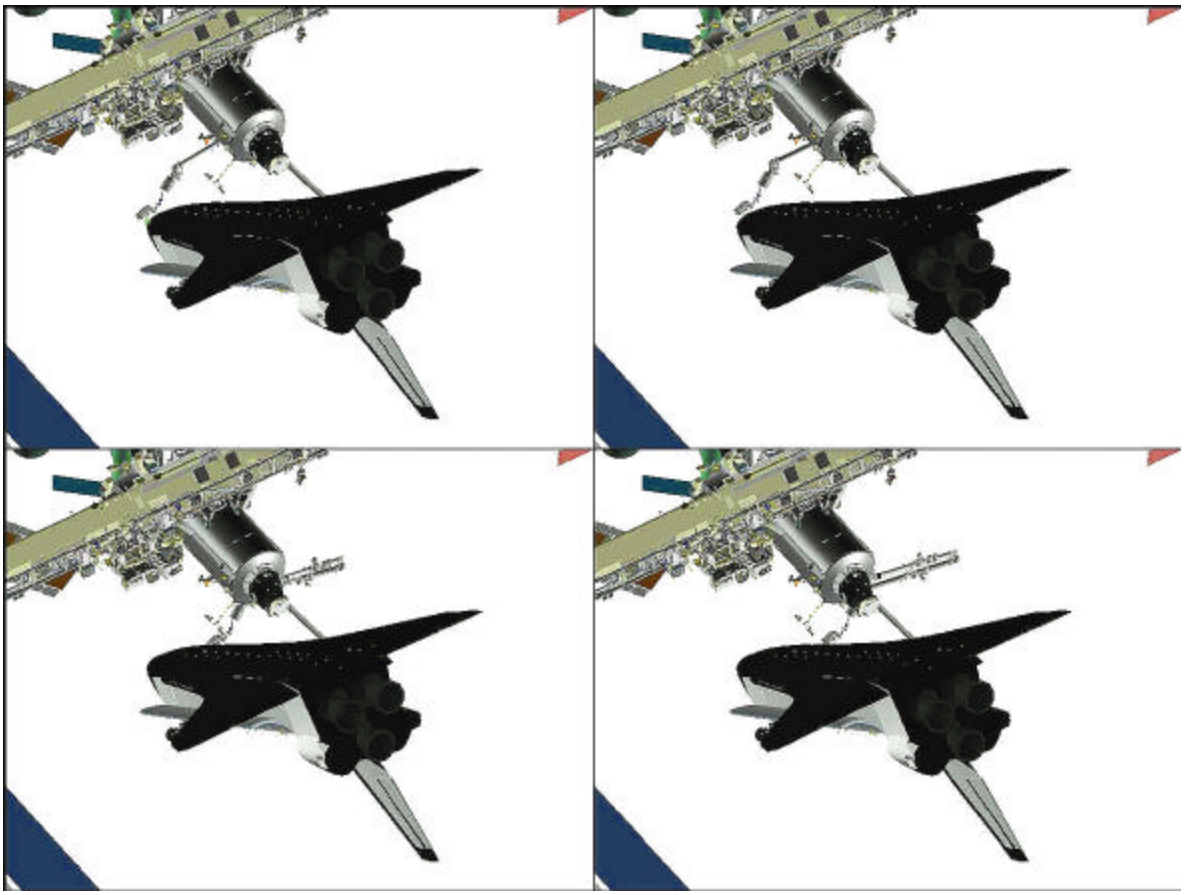

Figure 6.4-1-4. Proposed method for providing EVA access during TPS repair on an ISS flight.

Although we are aggressively pursuing RCC repair, it is too early in development to forecast a completion date.

Tile Repair

NASA has made significant progress in developing credible tile repair processes and materials. An existing, silicone-based, cure-in-place ablator has shown positive results in development testing. A manufacturing process change appears to control a foaming problem observed during early tests when applying this material in vacuum. The material adheres to aluminum, primed aluminum, tile, strain isolation pads, and tile adhesive in vacuum and cures in vacuum. This tile repair material has now transitioned to characterization and qualification testing. Detailed thermal analyses and testing are under way to confirm that this material can be applied and cured in the full range of orbit conditions. Additional arc jet, radiant heating, thermal-vacuum, and KC-135 zero-gravity tests are scheduled to confirm that this material will survive the entry environment when applied using the proposed repair techniques. Assuming the continued testing of the existing ablator is successful, the tile repair materials and tools should be ready in the December 2004–March 2005 timeframe. Although other candidate materials have been identified, detailed engineering development of these materials was deferred based on the positive results of the existing ablator. The photos in figure 6.4-1-6 show a test sample of this material before and after an arc jet test run to 2300°F. Figure 6.1-4-7 shows

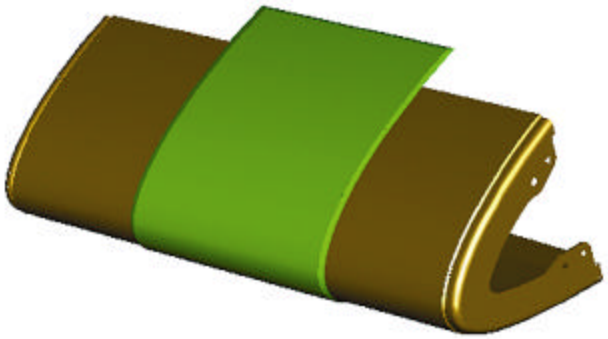

Figure 6.4-1-5. Wrap concept design.

Figure 6.4-1-6. Tile repair material before, during, and after arc jet testing at 2300°F.

a side view of a plug (similar to a wall anchor) that is ready to insert and results from arc jet testing.

NASA is developing EVA tools and techniques for TPS repair. NASA has already developed prototype specialized tools for applying and curing tile repair materials. The lessons learned from this process will enable similar development of RCC repair tools in the future. We are also beginning to develop new and innovative EVA techniques for working with the fragile Shuttle TPS system while ensuring that crew safety is maintained. EVAs for TPS repair represent a significant challenge; the experiences gained through the numerous complex ISS construction tasks performed over the past several years are contributing to our ability to meet this challenge.

STATUS

The following actions have been completed:

- Quantified SRMS, SSRMS, and ISS digital still camera inspection resolution
- Feasibility analyses for docked repair technique using SRMS and SSRMS
- Air-bearing floor test of overall boom to SRMS interface
- OBSS conceptual development, design requirements, and preliminary design review
- Engineering assessment for lower surface radio frequency communication during EVA repair
- Simplified Aid for EVA Rescue (SAFER) technique conceptual development and testing
- Feasibility testing on tile repair material
- Tile repair material transition from concept development to validation tests
- 1-G suited tests on tile repair technique
- Initial KC-135 tile repair technique evaluations
- Review of all Shuttle systems for compatibility with the docking repair scenario

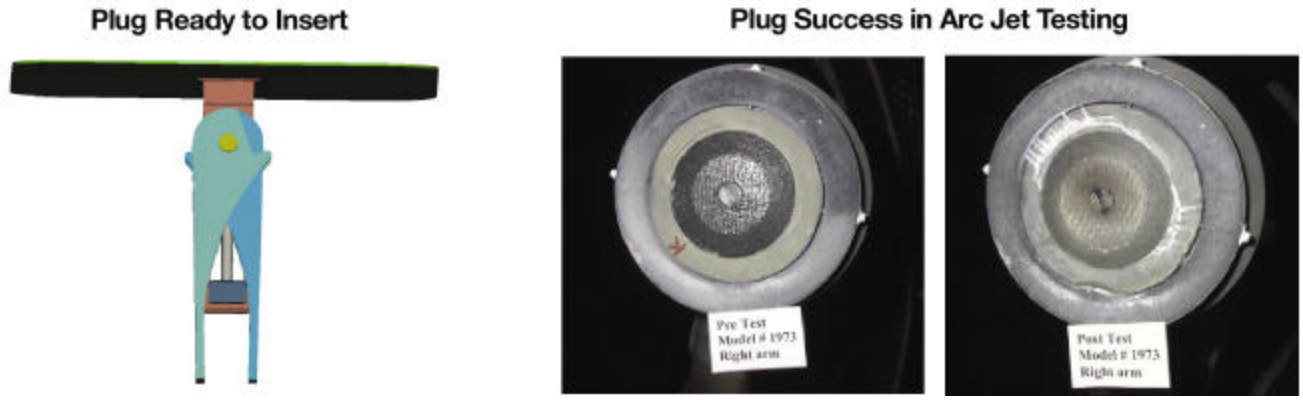

Figure 6.4-1-7. Plug success in arc jet testing.

Figure 6.4-1-8. Integrated operations concepts for inspection and repair.

- Inspection Tiger Team strategy formulated
- Selected three complementary RCC repair techniques for further development
- Developed the inspection and repair of the RCC and tile operations concept (figure 6.1-4-8)

Initial development of the RCC rigid wrap indicated significant technical challenges. As a result, the SSP recommended that the rigid wrap be deferred in favor of an expanded research and development project to develop alternative repair techniques for large holes. On June 9, 2004, the Space Flight Leadership Council approved the SSP recommendation and directed the SSP to develop plug and crack repair to the greatest extent practicable for the March 2005 launch of STS-114.

FORWARD WORK

High-level material and concept screening began in September 2003, using facilities at JSC, Ames Research Center, Langley Research Center (LaRC), and Lockheed-Martin. We are prepared to use other facilities at LaRC; Marshall Space Flight Center; Glenn Research Center; Lockheed-Martin; Boeing; Arnold Engineering Development Center at Arnold Air Force Base, Tennessee; University of Texas; and CIRA PWT in Italy as required to avoid test delays. Candidates that pass the screening tests will then be tested more rigorously for feasibility in entry-like conditions to facilitate down-selection. As with the tile repair material, RCC repair material final candidates will then transition to validation testing and certification through the normal engineering process.

NASA will continue to develop OBSS hardware development and operational procedures.

In addition to planned TPS repair capability, special on-orbit tests are under consideration for STS-114 to further evaluate TPS repair materials, tools, and techniques.

Final detailed analyses are in work to optimize Shuttle attitude control and redocking methods during repair.

Detailed procedures for techniques and systems configuration will be published as part of the Flight Operations Review data package in August 2004.

SCHEDULE

Responsibility	Due Date	Activity/Deliverable
SSP	Jul 03 (Completed)	1-G suited and vacuum testing begins on tile repair technique
SSP	Aug 03 (Completed)	Generic crew and flight controller training begins on inspection maneuver during approach to ISS
SSP	Aug 03 (Completed)	KC-135 testing of tile repair technique
SSP	Oct 03 (Completed)	Start of RCC repair concept screening tests
SSP	Dec 03 (Completed)	Tile repair material selection
SSP	Jun 04 (Completed)	Baseline ISS in-flight repair technique and damage criteria
SSP	Jul 04	Human thermal-vacuum, end-to-end tile repair tests
JSC/Mission Operations Directorate	Aug 04	Formal procedure development complete for inspection and repair
SSP ISS Program	Feb 05	All modeling and systems analyses complete for docked repair technique
SSP	TBD	Tile repair materials and tools delivery
SSP	TBD	RCC repair material selection

Columbia Accident Investigation Board

Recommendation 3.3-5

Improve the maintenance of launch pad structures to minimize the leaching of zinc primer onto Reinforced Carbon-Carbon components.

Note: NASA has closed this recommendation through the formal Program Requirements Control Board (PRCB) process. The following summary details NASA's response to the recommendation and any additional work NASA intends to perform beyond the *Columbia* Accident Investigation Board recommendation.

BACKGROUND

Zinc coating is used on launch pad structures to protect against environmental corrosion. "Craze cracks" in the Reinforced Carbon-Carbon (RCC) panels allow rainwater and leached zinc to penetrate the panels and cause pinholes.

NASA IMPLEMENTATION

Before return to flight (RTF), Kennedy Space Center (KSC) will enhance the launch pad structural maintenance program to reduce RCC zinc oxide exposure to prevent zinc-induced pinhole formation in the RCC (figure 3.3-5-1). The enhanced program has four key elements. KSC will enhance the postlaunch inspection and maintenance of the structural coating system, particularly on the rotating service structure. Exposed zinc primer will be recoated to prevent liberation and rainwater transport of zinc-rich compounds. Additionally, postlaunch pad structural wash-downs will be assessed to determine if they can be enhanced to minimize the corrosive effects of acidic residue on the pad structure. This will help prevent corrosion-induced damage to the topcoat and prevent exposure of the zinc primer. NASA will also investigate options to improve the physical protection of Orbiter RCC hardware and implement a sampling program to monitor the effectiveness of efforts to inhibit zinc oxide migration on all areas of the pad structure.

In the long term, the RCC Problem Resolution Team will continue to identify and assess potential mechanisms for RCC pinhole formation. Options for an enhanced pad wash-down system will be implemented on Pad A in fiscal year (FY) 2005 and on Pad B in FY 2006.

STATUS

NASA is pursuing enhanced inspection, structural maintenance, wash-down, and sampling options to reduce zinc leaching. Changes to applicable work authorization documents are being formulated and will be incorporated before RTF. The options developed were presented to the Space Shuttle PRCB in April 2004 and approved for implementation.

FORWARD WORK

None.

SCHEDULE

Responsibility	Due Date	Activity/Deliverable
Space Shuttle Program (SSP)	Dec 03 (Completed)	Complete enhanced inspection, maintenance, wash-down, and sampling plan
SSP	Apr 04 (Completed)	Present to the PRCB

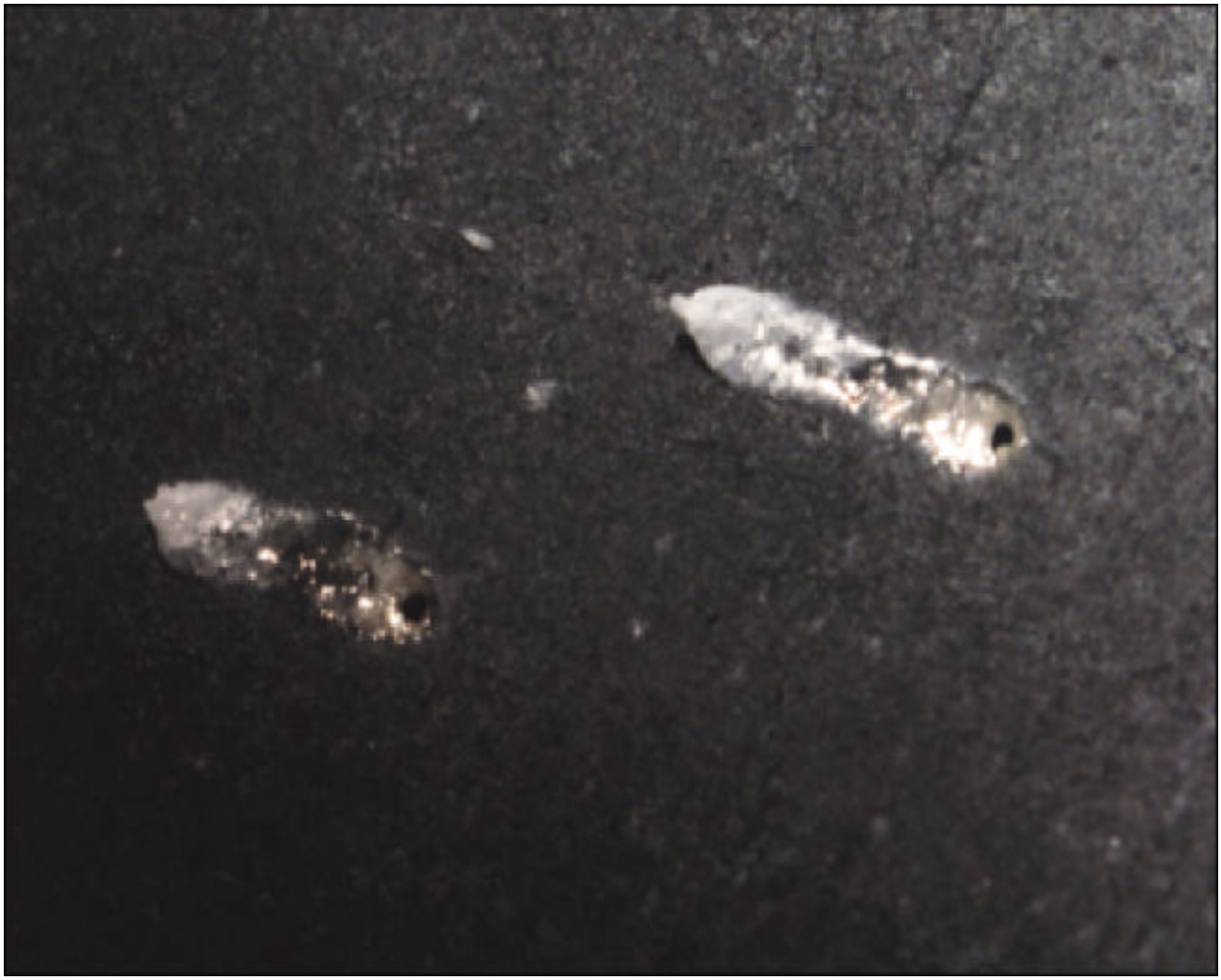

Figure 3.3-5-1. RCC pinholes.

Columbia Accident Investigation Board

Recommendation 3.4-1

Upgrade the imaging system to be capable of providing a minimum of three useful views of the Space Shuttle from liftoff to at least Solid Rocket Booster separation, along any expected ascent azimuth. The operational status of these assets should be included in the Launch Commit Criteria for future launches. Consider using ships or aircraft to provide additional views of the Shuttle during ascent. [RTF]

BACKGROUND

NASA is developing an integrated suite of improved imagery, radar, on-orbit inspection, and on-board capabilities that will serve the Space Shuttle through launch, on-orbit operations, and landing. This will allow us to take advantage of the combination of these capabilities to expeditiously address any problems identified over the course of a mission. Our response to each of the *Columbia* Accident Investigation Board imagery recommendations will be a component of the larger integrated system.

The combination of assets to be held as constraints to launch is under review, but the selection criteria will ensure damage detection and improved engineering assessment capability. The integrated system under development includes:

- Ground-based ascent imagery
- Aircraft-based ascent imagery
- Land-based and ship-based tracking radar, including high-resolution radar capable of tracking debris during ascent (SSP-12)
- On-vehicle (External Tank (ET), Solid Rocket Booster (SRB)) ascent imagery
- Orbiter umbilical well imagery of ET separation
- Shuttle crew handheld still and video imagery of the separated ET
- Shuttle Remote Manipulator System cameras
- Space Station Remote Manipulator System cameras
- Imagery from ISS during the Orbiter's approach and docking
- Extravehicular activity inspection imagery using wireless video system

Evaluation of the STS-107 ascent debris impact was hampered by the lack of high-resolution, high-speed cameras. Tracking camera assets at the Kennedy Space Center (KSC) (figure 3.4-1-1) and on the Air Force Eastern Range will be improved to provide the best possible engineering data during Shuttle ascent. For all future launches, NASA will provide the capability for three complementary views of the Shuttle that will allow us to pinpoint the location of any potential damage.

Ground cameras provide visual data suitable for detailed analysis of vehicle performance and configuration from prelaunch through SRB separation. Images can be used to assess debris shed in flight, including origin, size, and trajectory. In addition to providing information about debris, the images will provide detailed information on Shuttle systems used for trend analysis that will allow us to further improve the Shuttle.

NASA is improving ground assets for viewing launch activities. These evaluations include various still and motion imagery capabilities, the best location for each camera, and day versus night coverage.

Figure 3.4-1-1. Typical KSC long-range tracker.

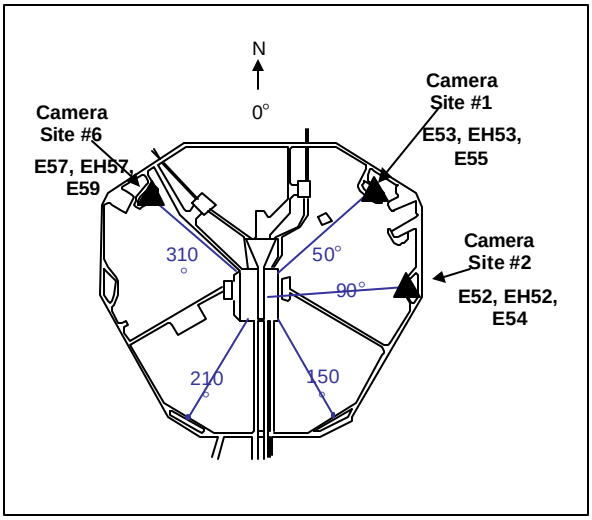

Figure 3.4-1-2. Short-range camera sites.

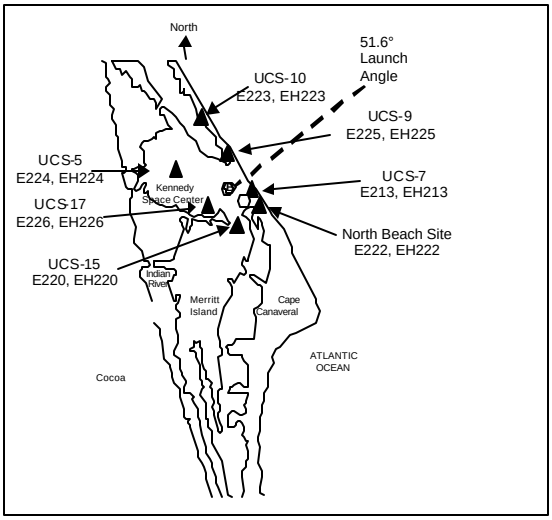

Figure 3.4-1-3. Medium-range tracker sites.

NASA IMPLEMENTATION

To ensure that three useful views of the Shuttle vehicle can be obtained during ascent, initially NASA will launch in daylight at a time of day in which sufficient lighting for the ET separation is provided. This will maximize imagery capability for engineering assessment of the ET modifications.

Obtaining three useful views in the dynamic imaging environment from liftoff through SRB separation requires dividing this time into three overlapping periods:

- Short-range images (T-10 seconds through T+57 seconds)
- Medium-range images (T-7 seconds through T+100 seconds)
- Long-range trackers (T-7 or vehicle acquisition through T+165 seconds)

These time periods provide for steps in lens focal lengths to improve image resolution as the vehicle moves away from each camera location. Some cameras are on fixed mounts, while others are mounted on mobile trackers. NASA, with the U.S. Air Force, will optimize the camera configuration for each flight. We will evaluate the locations of the cameras to ensure that the images provide the necessary resolution and coverage to support our analysis requirements.

The locations at Launch Complex 39-B for short-range, medium-range, and long-range tracking cameras are as shown in figures 3.4-1-2, 3.4-1-3, and 3.4-1-4, respectively. Existing cameras will be moved, modernized, and augmented to comply with new requirements.

STATUS

NASA has begun shipping the 14 existing trackers to the vendor for refurbishment. This work will be ongoing, beyond return to flight, until refurbishment of all trackers is complete (expected completion 2006). Trackers and optics will be borrowed from other ranges to support launch until the refurbished assets are delivered.

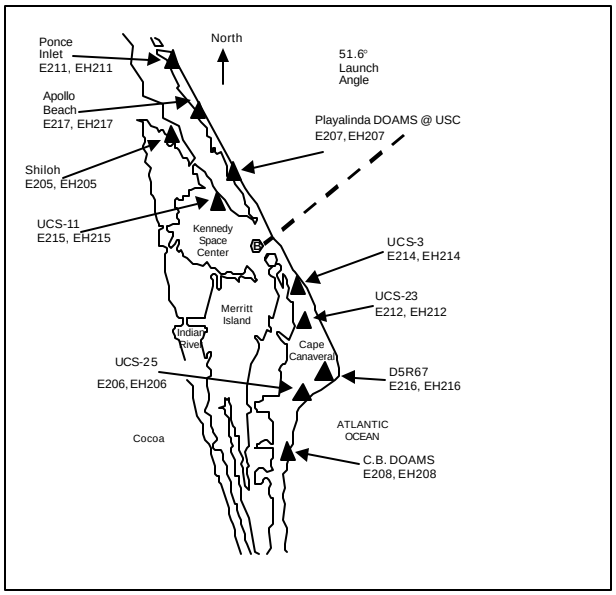

Figure 3.4-1-4. Long-range tracker sites.

NASA is procuring additional cameras to provide increased redundancy and refurbishing existing cameras. For instance, the U.S. Air Force-owned optics for the Cocoa Beach, Florida, camera (the "fuzzy camera" on STS-107) have been returned to the vendor for repair. We have completed an evaluation on current and additional camera locations, and refined the requirements for camera sites. Additional sites have been picked and are documented in the Launch and Landing Program Requirements Document 2000, sections 2800 and 3120. Additional operator training will be provided to improve tracking, especially in difficult weather conditions.

NASA has approved the development and implementation of an aircraft-based imaging system known as the WB-57 Ascent Video Experiment (WAVE) to provide both ascent and entry imagery. The use of an airborne imaging system will provide opportunities to observe the vehicle during days of heavier cloud cover and in areas obscured from ground cameras by the exhaust plume following launch.

The primary hardware for the WAVE consists of a 32-in. ball turret system, manufactured by Southern Research Institute, mounted on the nose of two WB-57 aircraft (figure 3.4-1-5). The use of two aircraft flying at an altitude of 60,000 ft will allow a wide range of coverage with each airplane providing imagery over a 400-mi path. The entry imaging program will involve the use of a Navy P3 aircraft to provide imagery during the later stages of entry.

Figure 3.4-1-5. WB-57 aircraft.

The WAVE ball turret houses an optical bench that provides a location for installation of multiple camera systems (high-definition television, infrared). The optics consist of a 5-m fixed focal length lens with an 11-in. diameter, and the system can be operated in both autotrack and manual modes.

WAVE will be used on an experimental basis during the first two Space Shuttle flights following return to flight. Based on an analysis of the system's performance and quality of the products obtained, following these two flights NASA will make the decision on whether to continue use of this system on future flights. The Critical Design Review for the WAVE was completed June 30-July 1, 2004.

NASA's plan for use of ground-based wideband radar and ship-based Doppler radar to track ascent debris is addressed in Part 2 of this document under item SSP-12, Radar Coverage Capabilities and Requirements.

FORWARD WORK

NASA is evaluating improving camera optics, upgrading tracking capabilities, and adjusting camera settings. Ship-based and airborne sensors are also under development.

The Space Shuttle Program (SSP) is addressing hardware upgrades, operator training, and quality assurance of ground-based cameras according to the integrated imagery requirements assessment.

NASA is developing appropriate launch commit criteria and pre-countdown camera operability checks. The launch commit criteria must be carefully chosen considering risk and safety of flight concerns because the cameras begin to function less than ten seconds before launch—after the two propellant tanks are pressurized, the auxiliary power units are activated, and just as the Space Shuttle Main Engines are starting.

SCHEDULE

Responsibility	Due Date	Activity/Deliverable
SSP	Aug 03 (Completed)	Program Approval of Ground Camera Upgrade Plan
SSP	Sep 03 (Completed)	Program Approval of funding for Ground Camera Upgrade Plan
SSP	Feb 04 (Completed)	Baseline Program Requirements Document Requirements for additional camera locations
SSP	May 04 (Completed)	Begin refurbishment of 14 existing trackers. Will be ongoing until all refurbishment of all trackers is complete (expected 2006). Trackers and optics will be borrowed fromother ranges to support launch until the assets are delivered
SSP	Jul 04 (Completed)	Critical Design Review for WAVE airborne imaging system
SSP	Aug 04	Baseline revised Launch Commit Criteria
SSP	Feb 05	Acquire new optics and cameras
SSP	Mar 05	Acquire six additional trackers, optics, cameras, and spares for all systems. Trackers will be borrowed from other ranges to support launches until the vendor delivers the new KSC trackers

Columbia Accident Investigation Board

Recommendation 6.3-2

Modify the Memorandum of Agreement with the National Imagery and Mapping Agency (NIMA) to make the imaging of each Shuttle flight while on orbit a standard requirement. [RTF]

Note: The Stafford Covey Return to Flight Task Group held a plenary session on April 15, 2004, in Houston, Texas. NASA's progress toward answering this recommendation was reviewed, and the Task Group agreed that the actions taken were sufficient to conditionally close this recommendation.

BACKGROUND

The *Columbia* Accident Investigation Board found, and NASA concurs, that the full capabilities of the United States to assess the condition of the *Columbia* during STS-107 should have been used but were not.

NASA IMPLEMENTATION

NASA has already concluded a Memorandum of Agreement with the National Imagery and Mapping Agency (subsequently renamed the National Geospatial-Intelligence Agency [NGA]) that provides for on-orbit assessment of the condition of each Orbiter vehicle as a standard requirement. In addition, NASA has initiated discussions with other agencies to explore the use of appropriate national assets to evaluate the condition of the Orbiter vehicle. Additional agreements have been developed and are in final review. The operational teams have developed standard operating procedures to implement agreements with the appropriate government agencies at the Headquarters level.

NASA has determined which positions/personnel will require access to data obtained from external sources. NASA will ensure that all personnel are familiar with the general capabilities available for on-orbit assessment and that the appropriate personnel are familiar with the means to gain access to that information. Over 70 percent of the requested clearances have been completed, and the remaining clearances are nearing completion.

Plans to demonstrate and train people per the new processes and procedures have been developed and will be exercised over the next few months, well before the launch of STS-114. Testing and validation of these new processes and procedures is under way and will be completed by end of the year (2004). Since this action may involve receipt and handling of classified information, the appropriate security safeguards will be observed during its implementation.

FORWARD WORK

None.

SCHEDULE

An internal NASA process is being used to track clearances, training of personnel, and the process validation.

Columbia Accident Investigation Board

Recommendation 4.2-1

Test and qualify the flight hardware bolt catchers. [RTF]

BACKGROUND

The External Tank (ET) is attached to the Solid Rocket Boosters (SRBs) at the forward skirt thrust fitting by the forward separation bolt. The pyrotechnic bolt is actuated at SRB separation by fracturing the bolt in half at a predetermined groove, releasing the SRBs from the ET thrust fittings. The bolt catcher attached to the ET fitting retains the forward half of the separation bolt. The other half of the separation bolt is retained within a cavity in the forward skirt thrust post (figure 4.2-1-1).

The STS-107 bolt catcher design consisted of an aluminum dome welded to a machined aluminum base bolted to both the left- and right-hand ET fittings. The inside of the bolt catcher was filled with a honeycomb energy absorber to decelerate the ET half of the separation bolt (figure 4.2-1-2).

Static and dynamic testing demonstrated that the manufactured lot of bolt catchers that flew on STS-107 had a factor of safety of approximately 1. The factor of safety for the bolt catcher assembly should be 1.4.

NASA IMPLEMENTATION

The new bolt catcher assembly and related hardware will be designed and qualified by testing as a complete system to demonstrate compliance with factor-of-safety requirements. The bolt catcher housing will be fabricated from a single piece of aluminum forging (figure 4.2-1-3) that removes the weld from the original design (figure 4.2-1-4). Further, a new energy-absorbing material will be selected, the thermal protection material is being reassessed (figure 4.2-1-5), and the ET attachment bolts and inserts (figure 4.2-1-6) are being redesigned and resized.

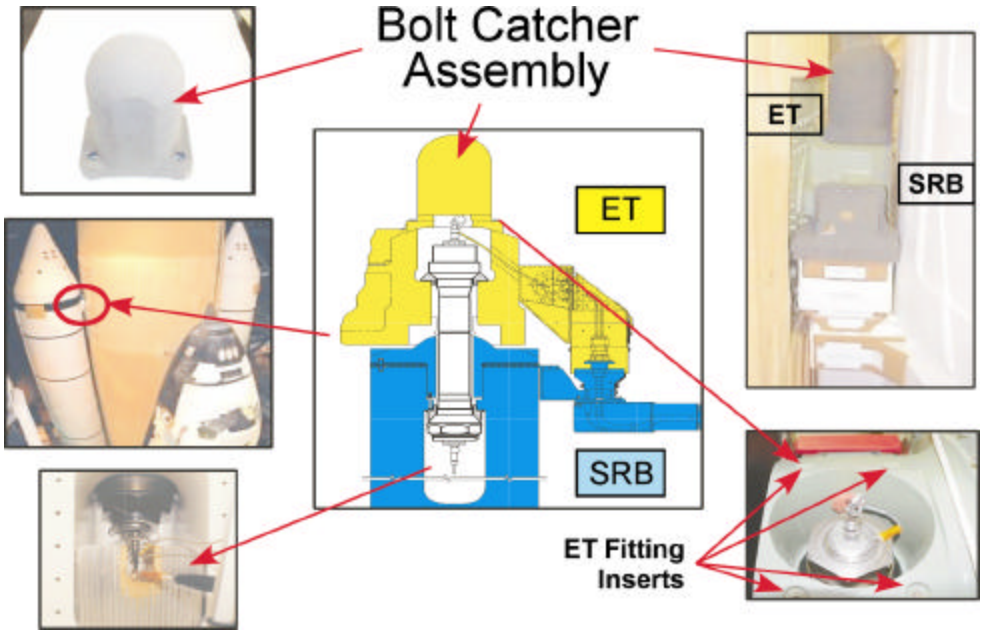

Figure 4.2-1-1. SRB/ET forward attach area.

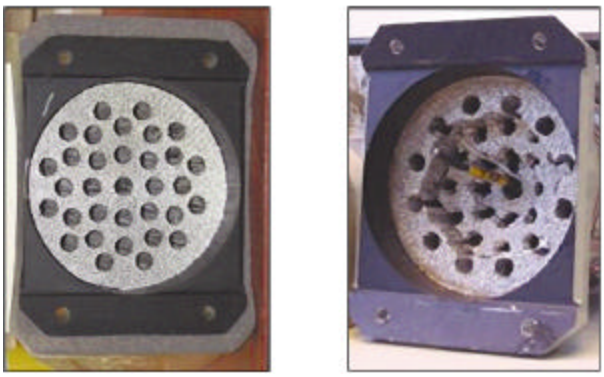

Bolt catcher energy absorber

Bolt catcher energy absorber after bolt impact

Figure 4.2-1-2. Bolt catcher impact testing.

Figure 4.2-1-3. New one -piece forging design.

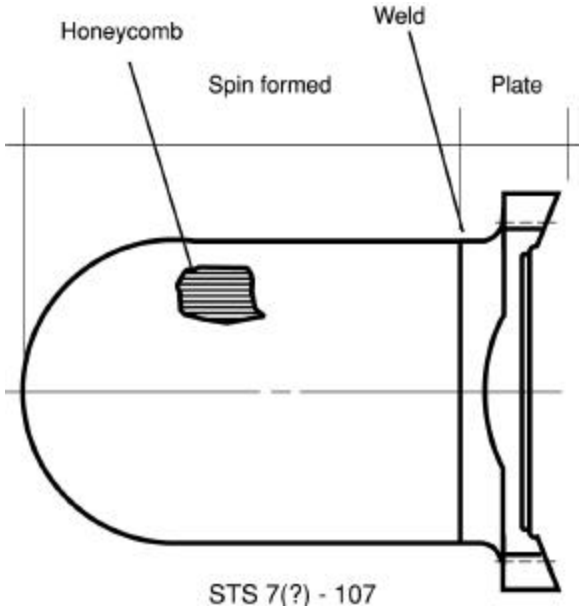

Figure 4.2-1-4. Original two-piece welded design.

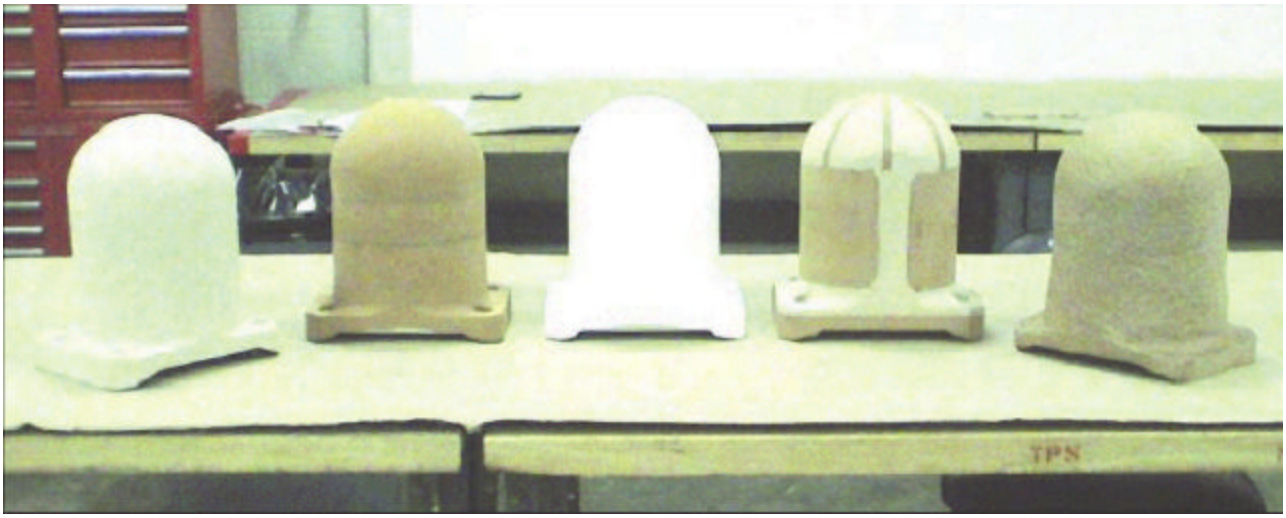

Figure 4.2-1-5. Thermal protection concepts.

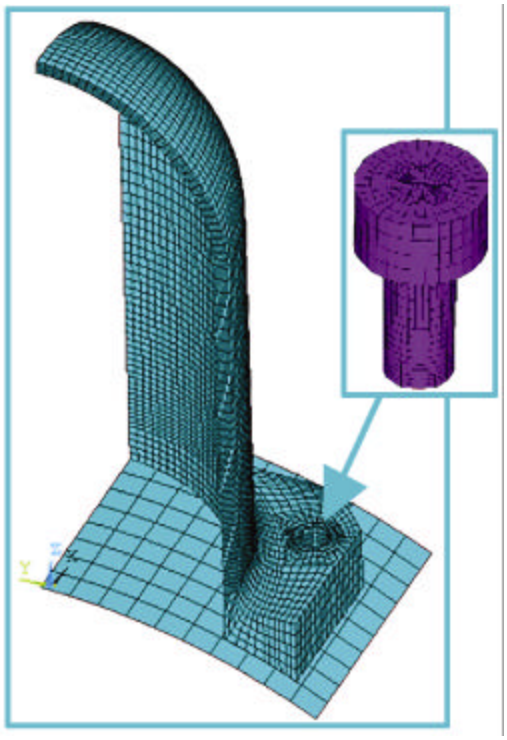

Figure 4.2-1-6. ET bolt/insert finite element model.

STATUS

NASA has completed the redesign of the bolt catcher assembly, the redesign and resizing of the ET attachment bolts and inserts, the testing to characterize the energy absorber material, and the testing to determine the design loads. Structural qualification to demonstrate that the assembly complies with the 1.4 factor-of-safety requirement is under way. Cork has been selected as the Thermal Protection System (TPS) material for the bolt catcher. TPS qualification testing is under way including weather exposure followed by combined environment testing, which includes vibration, acoustic, thermal, and pyrotechnic shock testing.

FORWARD WORK

NASA will complete structural and thermal protection material qualification testing. NASA will review our response to the *Columbia* Accident Investigation Board recommendation with the Stafford Covey Return to Flight Task Group.

SCHEDULE

Responsibility	Due Date	Activity/Deliverable
Space Shuttle Program (SSP)	May 04 (Completed)	Complete Critical Design Review
SSP	Jul 04	Complete Qualification
SSP	Aug 04	Deliver First Flight Article

Columbia Accident Investigation Board

Recommendation 4.2-3

Require that at least two employees attend all final closeouts and intertank area hand-spraying procedures. [RTF]

Note: The Stafford Covey Return to Flight Task Group held a plenary session on April 15, 2004, in Houston, Texas. NASA's progress toward answering this recommendation was reviewed and the Task Group agreed that the actions taken were sufficient to conditionally close this recommendation.

BACKGROUND

External Tank (ET) final closeouts and intertank area hand-spraying processes typically require more than one person in attendance to execute procedures. Those closeout processes that can currently be performed by a single person did not necessarily specify an independent witness or verification.

NASA IMPLEMENTATION

NASA has established a Thermal Protection System (TPS) verification team to verify, validate, and certify all future foam processes. The verification team will assess and improve the TPS applications and manual spray processes. Included with this assessment is a review and an update of the process controls applied to foam applications, especially the manual spray applications. Spray schedules, acceptance criteria, quality, and data requirements will be established for all processes during verification using a Material Processing Plan (MPP). The plan will define how each specific part closeout is to be processed. Numerous TPS processing parameters and requirements will be enhanced, including additional requirements for observation and documentation of processes. In addition, a review is being conducted to ensure the appropriate quality coverage based on process enhancements and critical application characteristics.

The MPPs will be revised to require, at a minimum, that all ET critical hardware processes, including all final closeouts and intertank area hand-spray procedures, be performed in the presence of two certified Production Operations employees. The MPPs will also include a step to require technicians to stamp the build paper to verify their presence, and to validate the work was performed according to plan. Additionally, quality control personnel will witness and accept each manual spray TPS application. Government oversight of TPS applications will be determined upon completion of the revised designs and the identification of critical process parameters.

In addition to these specific corrective measures taken by the ET Project, in March 2004 the Space Shuttle Program (SSP) widened the scope of this corrective action in response to a recommendation from the Return to Flight Task Group (RTFTG). The scope was widened to include all flight hardware projects. An audit of all final closeouts will be performed to ensure compliance with the existing guidelines that a minimum of two persons witness final flight hardware closures for flight for both quality assurance and security purposes.

The audits included participation from Project engineers, technicians, and managers. The following were used to complete the audit: comprehensive processing and manufacturing reviews, which included detailed work authorization and manufacturing document appraisals, and on-scene checks.

STATUS

The SSP has approved the revised approach for ET TPS certification, and the Space Flight Leadership Council approved it for RTFTG review. TPS verification activities are under way, and specific applicable ET processing procedures are under review.

All major flight hardware elements (Orbiter, ET, Solid Rocket Booster, Solid Rocket Motor, extravehicular activity, vehicle processing, and main engine) have concluded their respective audits as directed by the March 2004 SSP initiative. The results of the audits were presented to the Program Manager on May 26, 2004. The two-person closeout guideline was previously well-established in the SSP and largely enforced by multiple overlapping quality assurance and safety requirements. A few projects have identified and are addressing some specific processing or manufacturing steps to extend this guideline beyond current implementation; or where rigorous satisfaction of this guideline can be better documented. Changes to Program-level requirements documents are under way,

and will include the requirement for the projects and elements to have a minimum of two people witness final closeouts of major flight hardware elements.

FORWARD WORK

Formally document Program-level requirement to include a minimum two-person attendance at major flight element closeouts, and incorporate changes or corrections identified by the audit process.

SCHEDULE

Responsibility	Due Date	Activity/Deliverable
ET	Dec 03 (Completed)	Review revised processes with RTFTG
All flight hardware elements	May 04 (Completed)	Audit results of all SSP elements due
ET	May 04 (Completed)	Assessment of Audit Results
SSP	May 04 (Completed)	SSP element audit findings presented to SSP Manager
SSP	Jun 04 (Completed)	Responses due; PRCB action closed
SSP	Jan 05	Revised requirements formally documented

Columbia Accident Investigation Board

Recommendation 4.2-5

Kennedy Space Center Quality Assurance and United Space Alliance must return to the straightforward, industry-standard definition of "Foreign Object Debris," and eliminate any alternate or statistically deceptive definitions like "processing debris." [RTF]

BACKGROUND

Beginning in 2001, debris at Kennedy Space Center (KSC) was divided into two categories, "processing debris" and foreign object debris (FOD). FOD was defined as debris found during the final or flight-closeout inspection process. All other debris was labeled processing debris. The categorization and subsequent use of two different definitions of debris led to the perception that processing debris was not a concern.

NASA IMPLEMENTATION

NASA and United Space Alliance (USA) have stopped using the term "processing debris" and changed work procedures to treat all debris with the same high level of preventative action. Rigorous definitions of FOD that are the industry standard have been adopted.

KSC chartered a multidiscipline NASA/USA team to respond to this recommendation. Team members were selected for their experience in important FOD-related disciplines including processing, quality, and corrective engineering; process analysis and integration; and operations management. The team began by fact-finding and benchmarking to better understand the industry standards and best practices for FOD prevention. They visited the Northrup Grumman facility at Lake Charles, La.; Boeing Aerospace at Kelly Air Force Base, Texas; Gulfstream Aerospace in Savannah, Ga.; and the Air Force's Air Logistics Center in Oklahoma City, Okla. At each site, the team studied the FOD prevention processes, documentation programs, and assurance practices. The team also collaborated with the aerospace industry leader in professional FOD prevention, National Aerospace FOD Prevention, Inc., and gathered industry-wide standards and best practices.

Armed with this information, the NASA/USA team developed a more robust FOD prevention program that not only fully answered the *Columbia* Accident Investigation Board (CAIB) recommendation, but also raised the bar by instituting a myriad of additional improvements.

The new FOD program is anchored in three fundamental areas of emphasis: First, it eliminates various categories of FOD, including "processing debris," and treats all FOD with equally aggressive reduction efforts. Second, it reemphasizes the responsibility and authority for FOD prevention at the operations level. Third, it elevates the importance of comprehensive independent monitoring by both contractors and the Government.

NASA and USA have adopted the rigorous definitions of FOD and foreign object damage that are the industry standards.

USA has also developed and implemented new work practices and strengthened existing practices. This new rigor will reduce the possibility for temporary worksite items or debris to migrate to an out-of-sight or inaccessible area, and it serves an important psychological purpose in eliminating visible breaches in FOD prevention discipline.

FOD "walkdowns" have been a standard industry and KSC procedure for many years. These are dedicated periods where all employees execute a prescribed search pattern throughout the work areas, picking up all debris. USA has increased the frequency and participation in walkdowns, and has also increased the number of areas that are regularly subject to them. USA has also improved walkdown effectiveness by segmenting FOD walkdown areas into zones. Red zones are all areas within three feet of flight hardware and all areas inside or immediately above or below flight hardware. Yellow zones are all areas within a designated flight hardware operational processing area. Blue zones are desk space and other administrative areas within designated flight hardware operational processing areas.

Additionally, both NASA and USA have increased their independent monitoring of the FOD prevention program. USA Process Assurance Engineers regularly audit work areas for compliance with such work rules as removal of potential FOD items before entering work areas and tethering of those items that cannot be removed (e.g., glasses), tool control protocol, parts protection, and Clean-As-You-Go housekeeping procedures. NASA

Quality personnel periodically participate in FOD walkdowns to assess their effectiveness and oversee contractor accomplishment of all FOD program requirements.

An important aspect of the FOD prevention program has been the planning and success of its rollout. USA assigned FOD Point of Contact duties to a senior employee who led the development of the training program from the very beginning of plan construction. This program included a rollout briefing followed by mandatory participation in a new FOD Prevention Program Course, distribution of an FOD awareness booklet, and hands-on training on a new FOD tracking database. Recurrent training will be required once a year and will be enforced by tying work area access renewals to completion of the training. Another important piece of the rollout strategy was the strong support of senior NASA and USA management for the new FOD program and their insistence upon its comprehensive implementation. Managers at all levels will take the FOD courses and will periodically participate in FOD walkdowns.

The new FOD program has a meaningful set of metrics to measure effectiveness and to guide improvements. FOD walkdown findings will be tracked in the Integrated Quality Support Database. This database will also track FOD found during closeouts, launch countdowns, postlaunch pad turnarounds, landing operations, and NASA quality assurance audits. "Stumble-on" FOD findings will also be tracked, as they offer an important metric of program effectiveness independent of planned FOD program activities. For all metrics, the types of FOD and their locations will be recorded and analyzed for trends to identify particular areas for improvement. Monthly metrics reporting to management will highlight the top five FOD types, locations, and observed workforce behaviors, along with the prior months' trends. Continual improvement will be a hallmark of the revitalized FOD program.

STATUS

NASA and USA have completed the initial benchmarking exercises, identified best practices, modified operating plans and database procedures, and begun the rollout orientation and initial employee training. Official, full-up implementation will begin on July 1, 2004, although many aspects of the plan existed in the previous FOD prevention program in place at KSC. The full intent of CAIB Recommendation 4.2-5 has been met, and NASA and USA have gone beyond the recommendation to implement a truly world-class FOD prevention program.

FORWARD WORK

Assessment audits by NASA will begin in October 2004 to ensure the ongoing effectiveness of the FOD prevention program. Continual improvement will be vigorously pursued for the remainder of the life of the Shuttle.

NASA will review our response to this CAIB recommendation with the Stafford Covey Return to Flight Task Group.

SCHEDULE

Responsibility	Due Date	Activity/Deliverable
Space Shuttle Program (SSP)	Ongoing	Review and trend metrics
SSP	Oct 03 (Completed)	Initiate NASA Management walkdowns
SSP	Dec 03 (Completed)	FOD Control Program benchmarking
SSP	Jan 04 (Completed)	Revised FOD definition
SSP	Apr 04 (Completed)	Draft USA Operating Procedure released for review
SSP	Jul 04	Implement FOD surveillance
SSP	Oct 04	Baseline audit of implementation of FOD definition, training, and surveillance
SSP	TBD	Periodic surveillance audit

Columbia Accident Investigation Board

Recommendation 7.5-3

Reorganize the Space Shuttle Integration Office to make it capable of integrating all elements of the Space Shuttle Program, including the Orbiter.

BACKGROUND

NASA understands that the inconsistent division of responsibilities between the Space Shuttle Integration Office and the Space Shuttle Vehicle Engineering Office led to confused responsibilities for systems engineering and integration within the Space Shuttle Program (SSP). A more robust integration function might have enhanced our ability to recognize the true increase in risk represented by the STS-112 External Tank (ET) bipod ramp foam shedding and its implication for safe flight.

NASA IMPLEMENTATION

The SSP Manager strengthened the role of the Shuttle Integration Office to make it capable of integrating all of the elements of the SSP, including the Orbiter Project. The Program restructured its Space Shuttle Integration Office into a Space Shuttle Systems Engineering and Integration Office (SEIO). The SEIO Manager now reports directly to the SSP Manager, placing the SEIO at a level in the Shuttle organization that establishes its authority and accountability for integration of all Space Shuttle elements.

The new charter clearly establishes the SEIO's responsibility for systems engineering, integration, performance, and safety of the Space Shuttle vehicle in all of its ground and flight activities where multiple project elements are involved. To clarify responsibilities and to sharpen the focus of the SEIO, the Cargo Integration function (and personnel) from the old Shuttle Integration Office were relocated to the Flight Operations and Integration Office, while the Flight Software function was transferred to SEIO. The number of civil service personnel performing analytical and element systems engineering and integration in the SEIO was doubled by acquiring new personnel from the Johnson Space Center (JSC) Engineering and Mission Operations Directorates and from outside of NASA.

STATUS

NASA has completed the organizational and functional changes to comply with *Columbia* Accident Investigation Board (CAIB) Recommendation 7.5-3, and is preparing to review the response with the Stafford Covey Return to Flight Task Group.

The Space Shuttle Vehicle Engineering Office is now the Orbiter Project Office, and its charter is also amended to clarify that SEIO is now responsible for integrating all flight elements.

Integration Control Board (ICB): NASA reorganized and revitalized the ICB. This board reviews and approves element recommendations and actions to ensure the appropriate integration of activities in the SSP. The Orbiter Project Office is a mandatory member of the ICB. Orbiter changes that affect multiple elements must go through the ICB process prior to SSP approval.

Space Shuttle Flight Software Office: Functions with multielement integration were relocated from the Orbiter Project to the SEIO. The Space Shuttle Flight Software organization was moved from the Orbiter Project to the SEIO, since the Flight Software Office manages software for multiple flight hardware elements in addition to the Orbiter. Because many integrated Space Shuttle performance requirements are implemented through flight software, this change provides a more comprehensive view of the Space Shuttle as an integrated vehicle. Also, since almost any change to the Shuttle hardware has a corresponding flight software change, placing the flight software function inside SEIO improves the Program's ability to detect and control the integration of element design changes. Finally, this move also strengthens the SSP by placing the Shuttle Avionics Integration Laboratory within the SEIO.

Systems Integration at Other Centers: All Program integration functions at the Marshall Space Flight Center

(MSFC), the Kennedy Space Center, and JSC are now coordinated through the SEIO. Those offices receive technical direction from the SSP SEIO.

MSFC Propulsion Systems Engineering Integration Office (PSEIO) has increased its contractor and civil service technical strength and its responsibilities within the Program. Agreements between the PSEIO Project Office and the appropriate MSFC Engineering organizations were expanded to enhance anomaly resolution within the SSP. MSFC Engineering personnel participate in appropriate Program-level integration boards and panels, such as Structures and Loads; Aerodynamics; Aerothermodynamics; and Guidance, Navigation, and Control. PSEIO also participates in MSFC Element-level boards (e.g., Configuration Control Board, Element Acceptance Review, and Preflight Review) and brings a focused systems perspective and enhanced visibility into changes and anomalies affecting multiple Program elements. A PSEIO Review Board has been established to address the systems issues and ensure that the items are evaluated, tracked, and worked with the program SEIO.

System Integration Plan (SIP) Design Change Tool and the Master Verification Plans (MVPs): The role of the SIP has been revitalized. The SIPs are being developed for all major return to flight (RTF) design changes that impact multiple Shuttle elements. The SEIO is now responsible for all SIPs. The SIP Design Change Tool will further energize SEIO to be a proactive function within the SSP for integration of design changes and verification. MVPs are being updated to reflect consistent definition and usage of verification, validation, and certification and to enable a Design Certification Review effort prior to RTF.

Debris Environments Analyses: The SEIO is responsible for generating all natural and induced design environments analyses. Debris is now treated as an integrated induced environment that will result in element design requirements for generation limits and impact tolerance. All flight elements are being reevaluated as potential debris generators. Computations of debris trajectories under a wide variety of conditions will define the induced environment due to debris. The Orbiter Thermal Protection System (TPS) will be recertified to this debris environment, as will the systems of all flight elements. Specification of debris as an induced design environment will ensure that any change that results in either additional debris generation or additional sensitivity to debris impact will receive full Program attention.

Testing: SEIO is either leading or playing a major role in planning and executing the following tests in support of RTF:

- 3% Wind Tunnel test to save ET redesigned bipod ramp
- Mobile Launch Platform rollout loads fatigue environment test
- Full-scale Reinforced Carbon-Carbon impact testing
- Main Propulsion System prevalve filter effectiveness tests
- Main Propulsion System flowliner tests
- Debris radar cross-section tests
- Booster Separation Motor debris tests

Independent Assessments: A major challenge facing the SSP is to determine if the scope and quality of SEIO's work is sufficient to deliver high-quality systems engineering and integration. To assure this, the SSP formed a standing independent assessment team to evaluate the performance of the SEIO function. The team is composed of members with experience in integrating large, complex flight systems. The team's first review was held in January 2004. Also, the SSP has contracted with the Aerospace Corporation to provide daily consultations on systems engineering and integration methodologies and specific vehicle technical issues. Aerospace Corporation has completed an audit of the SEIO function according to the Carnegie Mellon System Engineering Capability Maturity Model. Additionally, a Debris Transport Independent Assessment Team composed of experts from NASA, industry, and academia conducted a special independent assessment of SEIO's debris transport methodology. Significant improvements to the model were made as a result of this review.

Integrated Planning: SEIO is involved in the following planning activities:

- RTF integrated schedule
- Instrumentation to accompany RTF
- RTF imagery, including both ground and flight
- System integration plans for RTF design changes, such as ET bipod, Solid Rocket Booster bolt catcher, debris generation, debris transport, and debris impact tolerance
- In-flight operations concept for integrating TPS impact and damage assessments

- Night launch operations concept
- Integrated test plans for component testing
- RTF Design Certification Review

Linkages to Other Program Functions: SEIO has increased its engineering civil service staff from 7 to 17 and added a Chief Engineer for Integration to ensure that SEIO takes full advantage of JSC engineering resources. MSFC Engineering now sits as a cochair on systems engineering and integration (SE&I) panels to assure a thorough technical review; NASA Aeronautics Centers (Ames Research Center, Dryden Flight Research Center, Langley Research Center, and Glenn Research Center) are now invited to SE&I panels. The ET Project and Safety and Mission Assurance Directorate now have team members colocated with SEIO until the RTF redesign is completed.

FORWARD WORK

The organizational changes and resource increases to SEIO fully answer the CAIB findings that NASA had diminished its systems engineering capability beyond an acceptable level. The revitalized SEIO provides an enhanced focus on engineering excellence and proactive identification and mitigation of multielement integrated risks. This office has provided critical integration and leadership on complex tasks that will enable us to return safely to flight. NASA will review its response to this CAIB recommendation with the Stafford Covey Return to Flight Task Group as a subset of the CAIB Recommendation R9.1-1.

SCHEDULE

Responsibility	Due Date	Activity/Deliverable
SSP Manager	Aug 03 (Completed)	Approve the SSP Reorganization
SSP Systems Integration	Aug 03 (Completed)	Transition Cargo Integration to Mission Integration
SSP Systems Integration	Aug 03 (Completed)	Reform ICB with Mandatory Orbiter Membership
SSP Systems Integration	Aug 03 (Completed)	Release ET Bipod Redesign Systems Integration Plan
SSP Systems Integration	Oct 03 (Completed)	Release Initial Debris-Induced Environment Computations for Use by Projects
JSC Engineering Directorate	Oct 03 (Completed)	Assign Chief Integration Engineer
SSP Systems Integration	Oct 03 (Completed)	Approve ET Bipod Redesign Systems Integration Plan
SSP Systems Integration	Oct 03 (Completed)	Transition Flight Software to SEIO
SSP Systems Integration	Oct 03 (Completed)	Complete Independent Review of Initial Debris Environment Computations
SSP Systems Integration	Dec 03 (Completed)	Review SEIO Quality and Scope Assessment
SSP Systems Integration	Feb 04 (Completed)	Approve Final Debris Environment

Columbia Accident Investigation Board

Recommendation 10.3-1

Develop an interim program of closeout photographs for all critical sub-systems that differ from engineering drawings. Digitize the closeout photograph system so that images are immediately available for on-orbit troubleshooting. [RTF]

BACKGROUND

Closeout photography is used, in part, to document differences between actual hardware configuration and the engineering drawing system. The *Columbia* Accident Investigation Board (CAIB) recognized the complexity of the Shuttle drawing system and the inherent potential for error and recommended an upgrade to it (ref. CAIB Recommendation 10.3-2).

Some knowledge of vehicle configuration can be gained by reviewing photographs maintained in the Kennedy Space Center (KSC) Quality Data Center film database or the digital Still Image Management System (SIMS) database. NASA now uses primarily digital photography. Photographs are taken for various reasons, such as to document major modifications, visual discrepancies in flight hardware or flight configuration, and vehicle areas that are closed for flight. SIMS can be accessed by NASA employees and support contractors. Previously, images were difficult to locate, since they were typically retrieved by a cross-reference to the work-authorizing document that specifies them.

NASA IMPLEMENTATION

NASA formed a Photo Closeout Team consisting of members from the engineering, quality, and technical communities to identify and implement necessary upgrades to the processes and equipment involved in vehicle closeout photography. KSC closeout photography includes the Orbiter, Space Shuttle Main Engine, Solid Rocket Boosters, and External Tank based on Element Project requirements. The Photo Closeout Team divided the CAIB action into two main elements: (1) increasing the quantity and quality of closeout photographs, and (2) improving the retrieval process through a user-friendly Web-based graphical interface system (figure 10.3-1-1).

Increasing the Quantity and Quality of Photographs

Led by the Photo Closeout Team, the Space Shuttle Program (SSP) completed an extensive review of existing closeout photo requirements. This multi-center, multi-element, NASA and contractor team systematically identified the deficiencies of the current system and assembled and prioritized improvements for all Program elements. These priorities were distilled into a set of revised requirements that has been incorporated into Program documentation. Newly identified requirements included improved closeout photography of extravehicular activity tool contingency configurations and middeck and payload bay configuration. NASA has also added a formal photography work step for KSC-generated documentation and mandated that photography of all Material Review Board (MRB) reports be archived in the SIMS. These MRB problem reports provide the formal documentation of known subsystem and component discrepancies, such as differences from engineering drawings.

To meet the new requirements and ensure a comprehensive and accurate database of photos, NASA established a baseline for photo equipment and quality standards, initiated a training and certification program to ensure that all operators understand and can meet these requirements, and improved the SIMS. Also NASA, to verify the quality of the photos being taken and archived, has developed an ongoing process that calls for SIMS administrators to continually audit the photos being submitted for archiving in the SIMS. Operators who fail to meet the photo requirements will be decertified pending further training. Additionally, to ensure the robustness of the archive, poor-quality photos will not be archived.

NASA determined that the minimum resolution for closeout photography should be 6.1 megapixels to provide the necessary clarity and detail. KSC has procured 36 Nikon 6.1 megapixel cameras and completed a test program in cooperation with Nikon to ensure that the cameras meet NASA's requirements.

Improving the Photograph Retrieval Process

To improve the accessibility of this rich database of Shuttle closeout images, NASA has enhanced SIMS by developing a Web-based graphical interface. Users will be able to easily view the desired Shuttle elements and systems

and quickly drill down to specific components, as well as select photos from specific Orbiters and missions. SIMS will also include hardware reference drawings to help users identify hardware locations by zones. These enhancements will enable the Mission Evaluation Room (MER) and Mission Management Team to quickly and intuitively access relevant photos without lengthy searches, improving their ability to respond to contingencies.

To support these equipment and database improvements, NASA and United Space Alliance (USA) have developed a training program for all operators to ensure consistent photo quality and to provide formal certification for all camera operators. Additional training programs have also been established to train and certify Quality Control Inspectors and Systems Engineering personnel; to train Johnson Space Center (JSC) SIMS end users, such as staff in the MER; and to provide a general SIMS familiarization course. An independent Web-based SIMS familiarization training course is also in development.

STATUS

NASA has revised the Operation and Maintenance Requirements System (OMRS) to mandate that general closeout photography be performed at the time of the normal closeout inspection process and that digital photographs be archived in SIMS. Overlapping photographs will be taken to capture large areas. NSTS 07700 Volume IV and the KSC MRB Operating Procedure have also been updated to mandate that photography of visible MRB conditions be entered into the SIMS closeout photography database. This requirement ensures that all known critical subsystem configurations that differ from Engineering Drawings are documented and available in SIMS to aid in engineering evaluation and on-orbit troubleshooting.

The revised Shuttle Program closeout photography requirements are documented in RCN KS16347R1 to OMRS File II, Volume I S00GEN.625 and S00GEN.620. Additionally, NASA Quality Planning Requirements Document

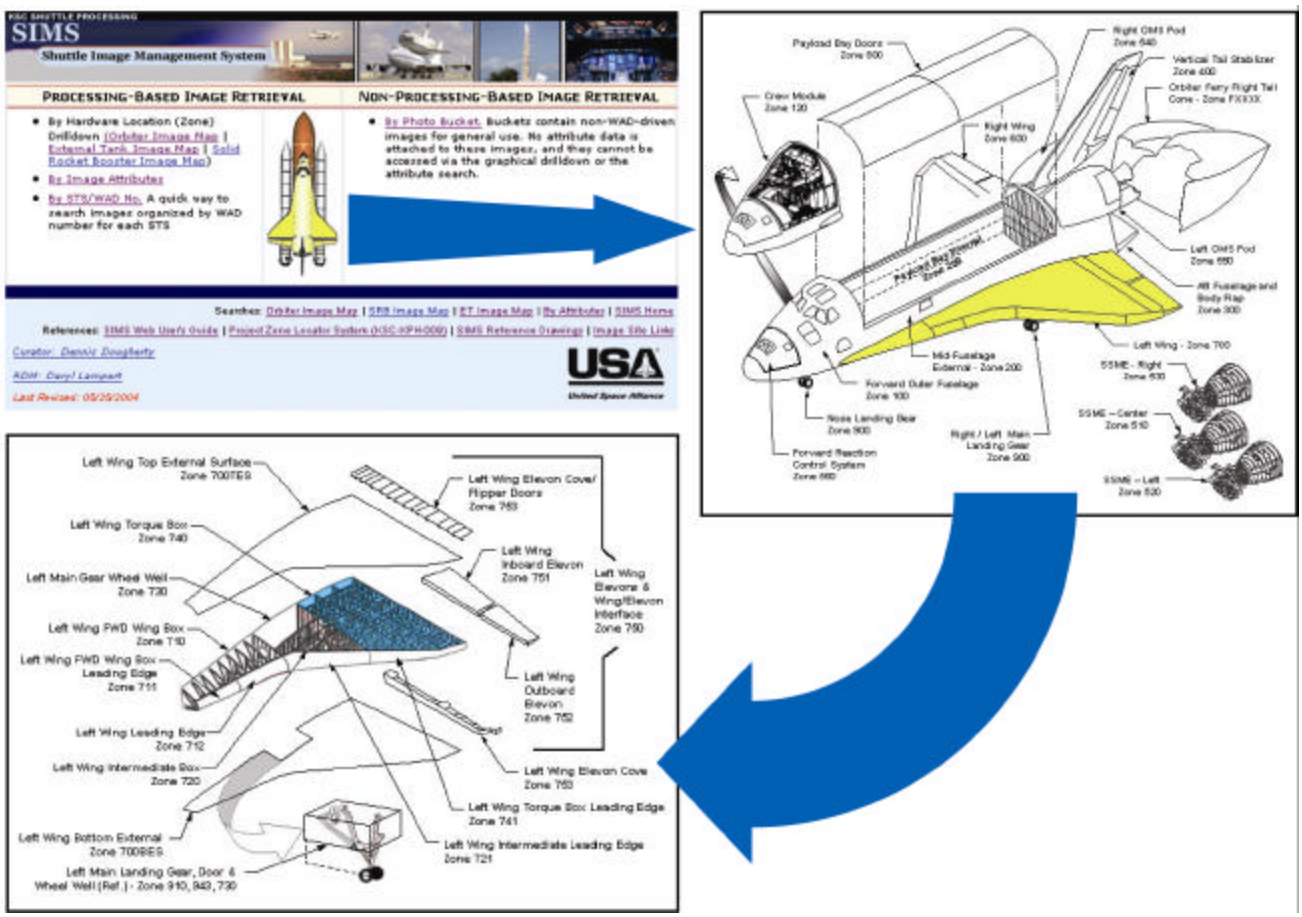

Figure 10.3-1-1. Enhanced SIMS graphic interface.

(QPRD) SFOC-GO0007 Revision L and USA Operation Procedure USA 004644, "Inspection Points and Personnel Traceability Codes," were updated to be consistent with the revised OMRS and QPRD documents.

The upgraded SIMS is operational and available for use by all SSP elements. Training is complete for critical personnel, and training will be ongoing to ensure the broadest possible dissemination within the user community.

FORWARD WORK

Training for Marshall Space Flight Center (MSFC) MER members will take place during the summer of 2004. NASA will review its response to this CAIB recommendation with the Stafford-Covey Return To Flight Task Group.

SCHEDULE

Responsibility	Due Date	Activity/Deliverable
KSC	Feb 04 (Completed)	Develop SIMS drilldown and graphical require-ments
SSP	Apr 04 (Completed)	Projects transmit photo requirements to KSC Ground Operations
KSC	May 04 (Completed)	Complete graphical drilldown software implementation
KSC	Jun 04 (Completed)	Develop/complete SIMS training module
KSC	Jun 04 (JSC training completed)	Provide training to MER. Demonstrate SIMS interface to JSC/MSFC

Space Shuttle Program Return to Flight Actions

Space Shuttle Program Action 3

NASA will evaluate the feasibility of providing contingency life support on board the International Space Station (ISS) to stranded Shuttle crewmembers until repair or rescue can be affected.

BACKGROUND

It is prudent for NASA to examine options for providing an emergency capability to sustain Shuttle crews on the International Space Station (ISS), should the Orbiter become unfit for entry. This Contingency Shuttle Crew Support (CSCS) capability could, in an emergency, sustain a Shuttle crew on board the ISS for a limited time to enable a repair to the Orbiter or allow the crew to be returned to Earth via a rescue mission. CSCS is not intended to mitigate known but unacceptable risks; rather, it is a contingency plan of last resort with limited capability to sustain the crew on the ISS. CSCS is not a certified capability with redundancy.

NASA IMPLEMENTATION

The fundamental rationale for return to flight is the elimination of critical debris from the External Tank (ET). NASA will resume Shuttle missions only when we have sufficient confidence in the ET to allow us to fly. While CSCS will offer a viable emergency capability for crew rescue, it will not be used to justify flying a Shuttle that is otherwise deemed unsafe.

After the ET is made safe, CSCS will provide an additional level of mitigation from residual risk. This is particularly desirable during the first few flights when we will be validating the improvements made to the Shuttle system. It is highly unlikely that the combination of failures necessary to lead NASA to invoke the CSCS capability will occur. It is secondary risk control and will be accomplished with zero fault tolerance in areas where ISS resources are taxed by an increased crew size. This approach is consistent with how NASA addresses other emergency measures, such as contingency launch aborts, to reduce residual risk to the crew.

STATUS

At the Space Flight Leadership Council (SFLC) on June 9, 2004, NASA approved the joint Space Shuttle Program (SSP)/ISS proposal to pursue CSCS as a contingency capability for STS-114 and STS-121. NASA will revisit the feasibility and need for continued CSCS capability following STS-121. CSCS capability will not be fault tolerant and is built on the presumption that, if necessary, all ISS consumables in addition to all Shuttle reserves will be depleted to support it. In the most extreme CSCS scenarios, it is possible that ISS will be decrewed following Shuttle crew rescue until consumables margins can be reestablished and a favorable safety review is completed. For the first two flights, NASA will ensure that the SSP has the capability to launch a rescue Shuttle mission within the time period that the ISS Program can reasonably predict that the Shuttle crew can be sustained on the ISS. This time period, which is referred to as the ISS "engineering estimate" of supportable CSCS duration, represents a point between worst- and best-case operational scenarios for the ISS based on engineering judgment and operational experience.

For planning purposes, NASA is assuming that the failures preventing the entry of the stranded Orbiter can be resolved before launching the rescue Shuttle. In an actual CSCS situation, it may not be possible to protect the rescue Shuttle from the hazards that resulted in the damage that precipitated the need for a rescue, and a difficult risk-risk trade analysis will be performed at the Agency level or above before proceeding to launch.

Contingency Capability for CSCS

CSCS is a contingency capability that will be employed only under the direst emergency situations. In NASA's formal risk management system, CSCS does not improve an otherwise "unacceptable" risk into the "accepted" category. The implementation of risk mitigation efforts such as CSCS will be accomplished to the greatest degree practicable, but are not formal controls to the SSP Integrated Hazards of "Degraded Functioning of Orbiter Thermal Protection System" and "Damage to the Windows Caused by the Natural or Induced Debris Environment." Since the acceptance rationale is not a formal control of the hazard, verification standards for this rationale are based on informed decisions by the Program management.

The use of CSCS as a contingency capability is analogous to some of our other abort modes. The ability to perform emergency deorbits provides some protection against

cabin leaks and multiple system failures. Contingency ascent aborts offer the ability to abort launches to contingency landing sites as protection against two or three Space Shuttle Main Engine failures. In both of these examples, as in many others, the capability is not certified for all, or even most, scenarios. Nevertheless, they do offer mitigation against residual risk and uncertainty. Another analogy can be drawn between CSCS and the ejection seats that were installed in the Orbiter for the first four flights of the Shuttle Program. They offered some crew escape capability during the first part of ascent and the last part of descent and landing, but they by no means represented comprehensive protection. However, they were an appropriate and valuable additional risk mitigation during the conduct of the initial test flights that validated the performance of the Shuttle system.

CSCS Requirements

The SSP and ISS Program have been working to define CSCS requirements using our established Joint Program Requirements Control Board (JPRCB) process. CSCS capability is not premised on the use of any International Partner resources other than those that are an integral part of joint ISS operations, such as common environmental health and monitoring systems. The additional capabilities that could be brought to bear by the International Partners to support CSCS could provide added performance margin.

The ISS Program, working with the Space and Life Sciences Directorate, has analyzed the impacts of maintaining up to seven additional people on the ISS in the event of CSCS. Their analyses indicate that at current operating levels, CSCS is feasible for long enough to allow the launch of a rescue mission: with current assumptions for a March 2005 launch, the ISS engineering estimate for STS-114 is approximately 59 days. The systems status will be updated continually as we approach a mission that calls for CSCS capability, and the ISS engineering estimate of CSCS duration will be revised accordingly.

The ISS Program is pursuing additional logistics to enable a more robust CSCS capability. NASA has begun coordination with the ISS International Partners to discuss the concept. NASA will evaluate current Shuttle and ISS support capabilities for crew rescue during CSCS and explore ways of using all available resources to extend CSCS to its maximum duration. This will involve making recommendations on operational techniques, such as undocking the Orbiter after depletion of usable consumables and having another Shuttle available for launch to rescue the crew within the projected CSCS duration. These actions are outside of the current flight rules and Orbiter performance capabilities and will need to be fully assessed. Currently NASA is assuming that STS-114 will require no newly developed Shuttle or ISS performance capabilities to enable CSCS. NASA will also evaluate CSCS options to maximize Shuttle/ISS docked capabilities. These options, such as power-downs and resource-saving measures, will be used to extend the time available for contingency operations including Thermal Protection System inspection and repair.

In addition to CSCS capability, NASA is evaluating the capability to launch on need to provide crew rescue. Using this capability, NASA could have a second Shuttle, designated STS-300, ready for launch on short notice during all missions. The ability to launch a rescue mission within the predicted CSCS duration will be held as a constraint to launch. The SSP, working with Safety and Mission Assurance and the ISS Program, is developing detailed criteria for the constraint. These criteria will be reported to the JPRCB.

NASA's designated rescue missions will be subject to the same development requirements as any other Shuttle mission; however, they will be processed on an accelerated schedule. Current estimates are that STS-300, the rescue mission for our first flight, can be processed for launch in approximately 45 days following the launch of STS-114. Processing time for STS-301 will be approximately 58 days following STS-121. These assessments assume a work acceleration to three shifts per day, seven days a week, but no deletion of requirements or alteration of protocols. Preplanning such extraordinary additional acceleration is not necessary, but provides another source of potential CSCS performance margin.

Stranded Orbiter Undocking, Separation, and Disposal

The Mission Operations Directorate has developed procedures for undocking a stranded Orbiter from the ISS, separating to a safe distance, then conducting a deorbit burn to disposal into an uninhabited oceanic area. These procedures have been worked in detail at the ISS Safe Haven Joint Operations Panel (JOP), and have been simulated in a joint integrated simulation involving flight controllers and flight crews from both the ISS Program and the SSP. Additional details will be refined, but the requirements and procedures for safely conducting a disposal of a stranded Orbiter are well understood.

Current plans call for the Orbiter crew to conduct a rewiring in-flight maintenance procedure on the day prior to disposal that would "hot wire" the docking system hook motors to an unpowered main electrical bus. Before abandoning the Orbiter

and closing the hatches, the crew would set up the cockpit switches to enable all necessary attitude control, orbital maneuvering, and ground uplink control systems. On the day of disposal, after the hatches are closed, Mission Control would uplink a ground command to re-power the bus, immediately driving the hooks to the open position. The rewiring procedure is well understood and within the SSP's experience base of successful on-orbit maintenance work.

The Orbiter will separate vertically upward and away from the ISS. Orbital mechanics effects will increase the relative opening rate and ensure a safe separation. The Mission Control Center will continue to control the attitude of the Orbiter within safe parameters. Once the Orbiter is farther than 1000 ft from the ISS, the attitude control motors will be used to increase the separation rate and to set up for the disposal burn for steep entry into Earth's atmosphere. The primary targeted impact zone would be near the western (beginning) end of an extremely long range of remote ocean. Planning a steep entry reduces the debris footprint; targeting the western end protects against eastward footprint migration due to underburn. This disposal plan has been developed with the benefit of lessons learned from the deorbit, ballistic entry, and ocean disposal of the Compton Gamma Ray Observatory in June 2000 and the Russian *Mir* Space Station in 2001.

FORWARD WORK

NASA will pursue the CSCS capability to a contingency level in support of the full joint crew.

SCHEDULE

Responsibility	Due Date	Activity/Deliverable
ISS Program	Aug 03 (Completed)	Status International Partners at Multilateral Mission Control Boards
ISS Program	Nov 03 (Completed)	Assess ISS systems capabilities and spares plan and provide recommendations to ISS and SSP
ISS Program	Jun 04 (Completed)	Develop CSCS Integrated Logistics Plan
ISS Program and SSP	Jun 04 (Completed)	Develop waste management and water balance plans
ISS Program and SSP	Jun 04 (Completed)	Develop ISS Prelaunch Assessment Criteria
ISS Program	Jun 04 (Completed)	Develop food management plan
SSP/ISS Program	Jun 04 (Completed)	Develop crew health and exercise protocols
ISS Program	Jun 04 (Completed)	Assess and report ISS ability to support CSCS
SSP/ISS Program	Aug 04	Safe Haven JOP report to JPRCB on requirements to implement CSCS

Space Shuttle Program Return to Flight Actions

Space Shuttle Program Action 8

NASA will identify certification of flight readiness (CoFR) process changes, including program milestone reviews, flight readiness review (FRR), and prelaunch Mission Management Team (MMT) processes to improve the system.

Note: NASA has closed this Space Shuttle Program Action through the formal Program Requirements Control Board (PRCB) process. The following summary details NASA's response to the Space Shuttle Program action and any additional work NASA intends to perform beyond the Space Shuttle Program action.

BACKGROUND

The certification of flight readiness (CoFR) is the fundamental process for ensuring compliance with Program requirements and assessing readiness for proceeding to launch. The CoFR process includes multiple reviews at increasing management levels that culminate with the Flight Readiness Review (FRR), chaired by the Associate Administrator for Space Flight, approximately two weeks before launch. After successful completion of the FRR, all responsible parties, both Government and contractor, sign a CoFR.

NASA IMPLEMENTATION

To ensure a thorough review of the CoFR process, the Shuttle PRCB has assigned an action to each organization to review NSTS 08117, Certification of Flight Readiness, to ensure that its internal documentation complies and responsibilities are properly described. This action was assigned to each Space Shuttle Program (SSP) supporting organization that endorses or concurs on the CoFR and to each organization that prepares or presents material in the CoFR review process.

Each organization reviewed the CoFR process in place during STS-112, STS-113, and STS-107 to identify any weaknesses or deficiencies in its organizational plan.

STATUS

NASA has revised NSTS 08117, Certification of Flight Readiness, including providing updates to applicable documents lists as well as the roles and responsibilities within project and Program elements, and has increased the rigor of previous mission data review during the project-level reviews. The revised document was approved by the PRCB in January 2004 and released in February 2004.

FORWARD WORK

None.

SCHEDULE

Responsibility	Due Date	Activity/Deliverable
SSP Element reviews	Aug 03 (Completed)	Report results of CoFR reviews to PRCB
SSP Program Office	Feb 04 (Completed)	Revise NSTS 08117, Certification of Flight Readiness

Space Shuttle Program Return to Flight Actions

Space Shuttle Program Action 12

NASA will review flight radar coverage capabilities and requirements for critical flight phases.

Note: NASA has closed this Space Shuttle Program Action through the formal Program Requirements Control Board process. The following summary details NASA's response to the Space Shuttle Program Action and any additional work NASA intends to perform beyond the Space Shuttle Program Action.

BACKGROUND

In addition to Shuttle vehicle ascent imaging by photo and visual means, NASA uses radar systems of the Air Force Eastern Range to monitor Space Shuttle launches. There are several C-Band radars and a Multiple Object Tracking Radar (MOTR) used to monitor the ascent trajectory. Although not specifically designed to track debris, these radars have some limited ability to resolve debris separating from the ascending vehicle, particularly between T+30 to T+250 seconds.

During the STS-107 launch, the MOTR, which is specifically intended for the purpose of tracking several objects simultaneously, was unavailable.

NASA IMPLEMENTATION

The Space Shuttle Systems Engineering and Integration Office commissioned the Ascent Debris Radar Working Group (ADRWG) to characterize the debris environment during a Space Shuttle launch and to identify/define the return signals seen by the radars. Once the capabilities and limitations of the existing radars for debris tracking were understood, this team researched proposed upgrades to the location, characteristics, and post-processing techniques needed to provide improved radar imaging of Shuttle debris.

The specific technical goal of the ADRWG was to improve the radars' ability to resolve, identify, and track potential debris sources. Another goal was to decrease the postlaunch data processing time such that a preliminary radar assessment is available more rapidly, and to more easily correlate the timing of the ascent radar data to optical tracking systems. Successful implementation of a radar debris tracking system will have an advantage over optical systems as it is not constrained by ambient lighting or cloud interference. It further has the potential to maintain insight into the debris shedding environment beyond the effective range of optical tracking systems.

STATUS

The ADRWG was initiated in August 2003. After a review of existing debris documentation and consultation with radar experts within and outside of NASA, a planning presentation outlining the approach and process to be used was provided to the Space Shuttle Program (SSP) office in September 2003. A number of workshops were held at NASA centers and at Wright-Patterson Air Force Base to characterize the debris sources and how they appeared on radar, and to analyze the potential debris threat to the Shuttle represented by the radar data.

The ADRWG constructed a composite list of potential debris sources. This list was coordinated with all of the Shuttle elements and will be the basis for analysis of radar identification capabilities such as radar cross section (RCS) signatures. A series of critical radar system attributes was compiled, and a number of existing radar systems has been evaluated against these criteria. Data analysis included comparisons of radar data with known RCS signatures and ballistic trajectories.

On January 13, 2004, the ADRWG provided its initial findings and draft recommendations to the SSP. The team found that the existing range radars were not well suited to perform the Shuttle debris assessment task because of their sitting and configuration. Only a properly sited and configured radar system can be expected to provide the insight needed to assess the debris threat during a Shuttle launch. A candidate architecture, using several elements of the Navy Mobile Instrumentation System (NMIS), formed the basis of the radar system for return to flight (RTF). A long-term, highly capable architecture was also proposed for an on-board debris radar detection capability. Development of this potential capability will continue. However, this capability will not be available for RTF.

Radar field testing included a series of six Booster Separation Motor firings to characterize how the plume contributed to the existing radar data. These tests were completed at the U.S. Navy's China Lake facility in

February 2004. A comprehensive set of RCS measurements of candidate Shuttle debris material has been completed at Wright-Patterson Air Force Base and was correlated to dynamic field results at the Naval Air Station at Patuxent River in June 2004.

The final SSP presentation, including field results, prior mission analysis, and final recommendations, was completed in April 2004. To provide adequate threat assessment, a ground-based radar system must include both wideband capabilities to provide the precise position of debris as well as Doppler capabilities for differential motion discrimination. Also necessary are near-real-time data reduction and display in remote facilities, ballistic coefficient traceability, and the highest calibration to meet Range Certification Standard STD 804-01. To meet these requirements, NASA, in cooperation with the U.S. Navy and the U.S. Air Force, is developing a radar plan that involves relocation of the U.S. Navy midcourse radar from Puerto Rico to Cape Canaveral. This radar provides wideband, coherent C-band radar coverage, which will be supplemented with continuous pulse Doppler X-band ship-based radar mounted on the Solid Rocket Booster recovery ships.

A Memorandum of Understanding between NASA and the U.S. Navy is in work for implementation of flight radar coverage. A proof of concept using debris radar for a Delta 2 launch using the U.S. Navy's NMIS is planned for July 2004.

FORWARD WORK

None.

SCHEDULE

Responsibility	Due Date	Activity/Deliverable
ADRWG	Nov 03 (Completed)	Complete Radar Study
ADRWG	Nov 03 (Completed)	Finalize finding and recommendations
ADRWG	Apr 04 (Completed)	Provide final list of debris sources
SSP	Apr 04 (Completed)	Baseline requirements and initiate implementation – Present to SSP Program Requirements Control Board

Columbia Accident Investigation Board

Observation 10.4-2

Kennedy Space Center's Quality Assurance programs should be consolidated under one Mission Assurance office, which reports to the Center Director.

Note: NASA has closed this observation through the formal Program Requirements Control Board process. The following summary details NASA's response to the observation and any additional work NASA intends to perform beyond the *Columbia* Accident Investigation Board (CAIB) observation.

BACKGROUND

Prior to the *Challenger* accident, Quality Assurance functions were distributed among the programs at Kennedy Space Center (KSC). In response to the findings of the Rogers Commission Report, KSC consolidated its Safety and Mission Assurance (SMA) functions into a single organizational entity. In May 2000, KSC once again dispersed the SMA function into each program and appropriate operational directorate. This was done to provide direct SMA support to each of the directorates, to ensure that the programs had the resources to be held accountable for safety. and to enhance acceptance of the SMA role. Although this improved the relationships between SMA and the programs, the dependence of SMA personnel on program support limited their ability to effectively perform their role.

NASA IMPLEMENTATION

In close coordination with the effort led by the Associate Administrator for Safety and Mission Assurance (AA for SMA) in responding to CAIB Recommendation 7.5-2, KSC has established a center-level team to assess the KSC SMA organizational structure. This team was chartered in October 2003 to determine plans for implementing a consolidated SMA organization. The team developed several different candidate organizational structures. To maintain the benefits of the existing organization, which had SMA functions distributed to the appropriate programs and operational directorates, and to limit disruption to ongoing processes, the KSC Center Director chose a consolidated structure organized internally by program (see figure 10.4-2-1).

On January 13, 2004, KSC formed a Return to Flight Reorganization Team, which included an SMA Reorganization Team. The first task of this team was to perform a bottom-up review of the entire SMA organization. This bottom-up review revealed the need for additional SMA resources to fully perform the required functions. The proportion of SMA personnel to the total center population was deliberately decreased from a period shortly before the creation of the Space Flight Operations Contract (SFOC) based on the tasks transitioned to the contractor workforce; however, the bottom-up review demonstrated the need for expansion of the oversight/insight function and the associated collection of SMA data independent of the contractor-derived SMA data. As a result, additional SMA positions (Full-Time Equivalents (FTEs)) are being provided. These additional FTEs will reduce the amount of overtime currently required of the SMA professionals. They will also bring the percentage of SMA personnel to the entire KSC population back to the level that existed prior to the SFOC (see figure 10.4-2-2, chart 1). The additional positions will also decrease the dependence on the contractor for SMA data.

The bottom-up review also revealed unnecessary duplication of independent assessment resources. It was determined that if the entire KSC SMA workforce became centralized and once again independent of the programs, there would be no need for a large independent assessment organization.

When developing the single consolidated SMA organization at KSC, the SMA Reorganization Team identified the need for an Integration Division. Depicted as SA-G in figure 10.4-2-1, this Division will be responsible for ensuring consistency across the programs and for developing and implementing technical training for the SMA disciplines. The Integration Division will include discipline experts in Safety Engineering, Quality Engineering, Quality Assurance, Software Assurance, Reliability, Human Factors, and Risk Management, and it will be responsible for policy creation and review and procurement assurance.

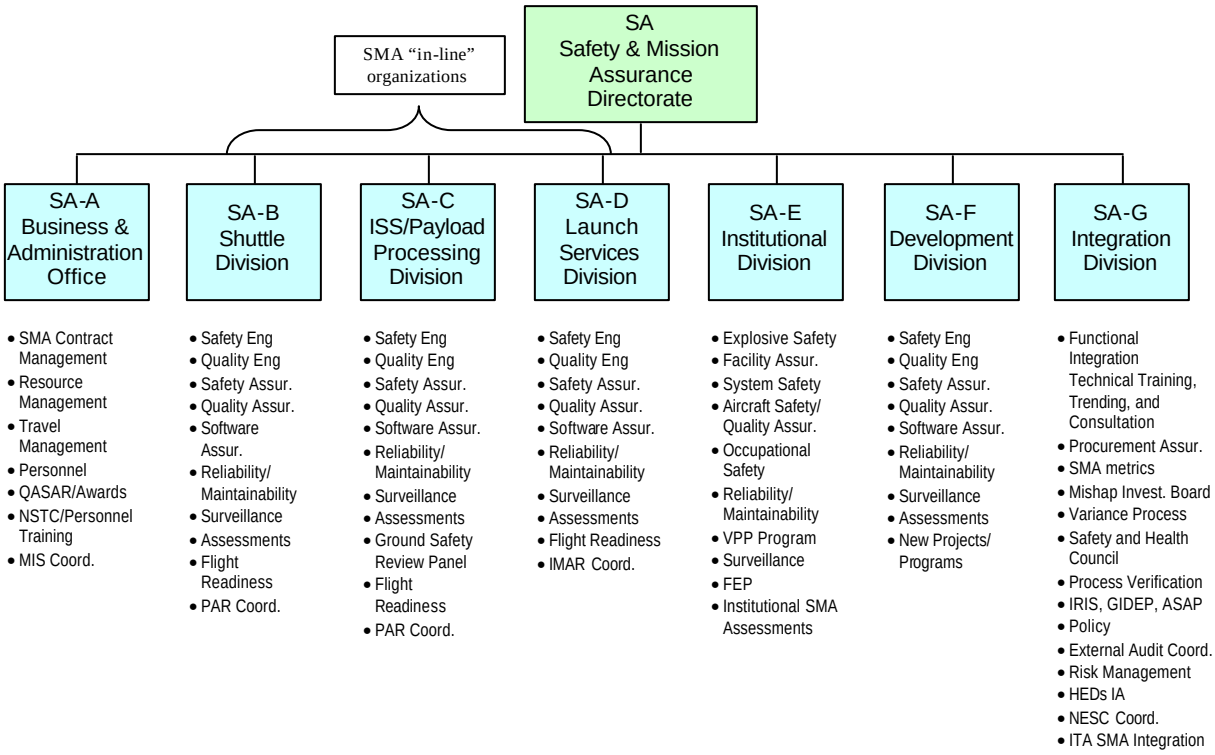

Figure 10.4-2-1. Consolidated SMA.

The SMA Reorganization Team also evaluated the work required by the planned Independent Technical Authority (ITA) to incorporate its requirements into the centralized SMA organization. To fulfill these requirements, KSC has requested three FTEs for SMA/ITA within the total 58 being requested. These three FTEs will be responsible for SMA trending and integration.

In addition to the managerial independence established by consolidation, the SMA Reorganization Team worked with the KSC financial organization and NASA Headquarters to create a new "directed service pool" funding process. The directed service pool gives the SMA Directorate the authority to determine, in consultation with the programs, the level of support it will provide to each program. The SMA Reorganization Team also developed an avenue to use the Johnson Space Center SMA contract to provide for immediate resource needs while allowing SMA to have an independent contract at the end of this fiscal year.

Finally, KSC has several ongoing initiatives to address the culture within SMA and throughout the center. Specifically, Behavioral Science Technologies Inc. has identified the need for the KSC SMA organization to work on improving its organizational culture. This process will continue after the SMA reorganization is complete.

STATUS

Complete.

FORWARD WORK

None.

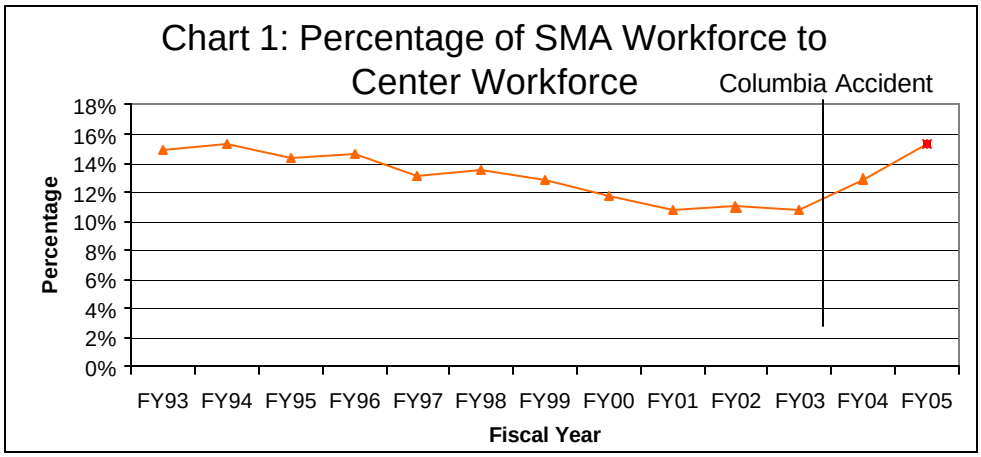

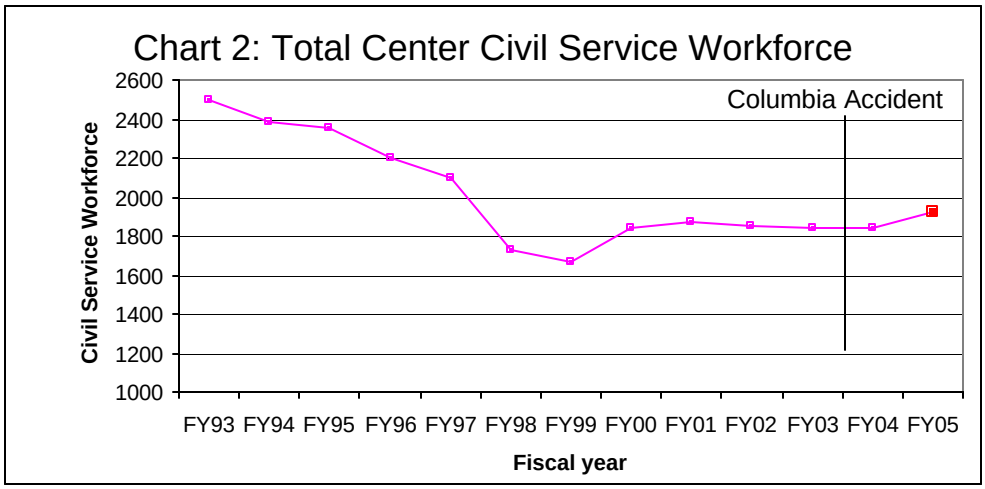

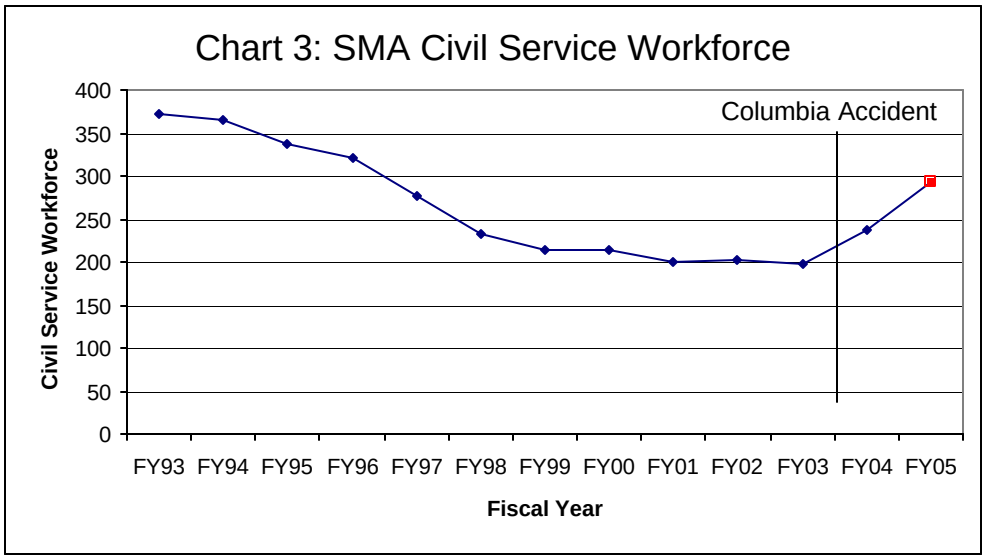

Figure 10.4-2-2. SMA workforce.

SCHEDULE

Responsibility	Due Date	Activity/Deliverable
KSC	Completed	Recommendations to KSC Center Director
KSC	Apr 04 (Completed)	Reorganization definition complete
KSC	May 04 (Completed)	Implementation complete

Columbia Accident Investigation Board

Observation 10.8-1

Teflon (material) and Molybdenum Disulfide (lubricant) should not be used in the carrier panel bolt assembly.

Note: NASA has closed this observation through the formal Program Requirements Control Board process. The following summary details NASA's response to the observation and any additional work NASA intends to perform beyond the *Columbia* Accident Investigation Board observation.

BACKGROUND

Concerns regarding the use of these materials were initiated due to the brittle fracture mode observed on some A-286 Stainless Steel Leading Edge Subsystem Carrier Panel bolts. Specifically, it was argued that lubricant materials consisting of Teflon and/or Molybdenum Disulfide should not be used due to their potential to contribute to a stress corrosion cracking fracture mechanism at elevated temperatures. Traces of perfluorinated polyether grease and Molybdenum Disulfide (lubricants) were found on the carrier panel bolt shank and sleeve. However, no Teflon was found during the failure analysis of carrier panel fasteners.

A-286 fasteners in the presence of an electrolyte must also be exposed to elevated temperatures for stress corrosion cracking to be of concern. However, fastener installations are protected from temperature extremes (the maximum temperatures seen, by design, are less than 300ºF).

NASA IMPLEMENTATION

NASA conducted interviews with ground technicians at Kennedy Space Center (KSC); these interviews indicated that the use of Braycote grease as a lubricant may have become an accepted practice due to the difficult installation of this assembly. Braycote grease contains perfluorinated polyether oil, Teflon, and Molybdenum Disulfide materials. According to design drawings and assembly procedures, the use of lubricants should not have been allowed in these fastener installations.

As a result of these findings, NASA directed United Space Alliance (USA) to institute appropriate corrections to their fastener installation training and certification program. USA shall emphasize to its technicians to follow exactly the installation instructions for all Orbiter fastener installations. Any deviation from specific instructions will require disposition from engineering before implementation. USA will further emphasize that lubricants cannot and should not be used in any fastener installation, unless specifically authorized.

In addition, NASA has implemented an engineering review of all discrepancy repairs made on Orbiter hardware at KSC. An engineering review will occur to provide the appropriate checks and balances if a lubricant is required to address a specific fastener installation problem.

STATUS

NASA and USA have implemented corrective actions to ensure that lubricant will not be used in fastener applications unless explicitly approved by engineering.

FORWARD WORK

None.

SCHEDULE

Responsibility	Due Date	Activity/Deliverable
KSC/USA Ground Operations	Mar 04 (Completed)	Update fastener training and certification program for USA technicians; require deviations from instructions to be approved before implementation

Columbia Accident Investigation Board

Observation 10.8-3

The use of Room Temperature Vulcanizing 560 and Koropon should be reviewed.

Note: NASA has closed this observation through the formal Program Requirements Control Board process. The following summary details NASA's response to the observation and any additional work NASA intends to perform beyond the *Columbia* Accident Investigation Board observation.

BACKGROUND

Concerns regarding the use of Room Temperature Vulcanizing (RTV) 560 and Koropon materials were initiated due to the brittle fracture mode observed on some A-286 Stainless Steel Leading Edge Subsystem Carrier Panel bolts. Specifically, it was argued that trace amounts of contaminants in these materials could, at elevated temperatures, contribute to a Stress Corrosion Cracking (SCC) of the bolts. It was also proposed that these contaminants might accelerate corrosion, particularly in tight crevices.

SCC of A-286 material is only credible at high temperatures. This is not a concern as all fastener installations are protected from such temperature extremes (the maximum temperatures seen, by design, are less than 300°F).

NASA IMPLEMENTATION

NASA completed materials analyses on multiple A-286 bolts that exhibited a brittle-like fracture mode. Failure analysis included fractography, metallography, and chemical analysis. Furthermore, a research program was executed to duplicate and compare the bolt failures experienced on *Columbia*. This proved conclusively that the brittle-looking fracture surfaces were produced during bolt failure at temperatures approaching 2000°F and above. This failure mode is not a concern with the A-286 Stainless Steel Leading Edge Subsystem Carrier Panel bolts, as all fastener installations are protected from such temperature extremes.

In addition to failure analysis, both RTV 560 and Koropon were assessed for the presence of trace contaminants. Inductively Coupled Plasma analyses were completed on samples of both materials. The amount and type of trace contaminants were analyzed and determined to be insignificant.

RTV 560 and Koropon were selected for widespread use in the Shuttle Program because they prevent corrosion. All corrosion testing and failure analysis performed during the life of the Shuttle Program have not shown deleterious effects from either product. Several non-Shuttle aerospace companies have used Koropon extensively as an anticorrosion primer and sealant. To date, problems with its use in the military and industry have not been identified.

Both of these materials may eventually fail in their ability to protect from corrosion attack, but do not fail by chemically breaking down to assist corrosion mechanisms. Thus, NASA concluded that trace contaminants in Koropon and RTV 560 do not contribute to accelerated corrosion or SCC mechanisms.

In addition to answering this specific observation, NASA is assessing the long-term performance of all nonmetallic materials used on the Orbiter through a vehicle-wide aging materials evaluation. This effort is ongoing and will continue in support of the Orbiter for the remainder of its service life.

STATUS

NASA considers that these materials have been reviewed, and present no risk for supporting accelerated corrosion and/or SCC mechanisms. Appropriate long-term additional studies have been initiated.

FORWARD WORK

None.

SCHEDULE

Responsibility	Due Date	Activity/Deliverable
Space Shuttle Program	Mar 04 (Completed)	Review use of RTV 560 and Koropon

Columbia Accident Investigation Board

Observation 10.8-4

Assuring the continued presence of compressive stresses in A-286 bolts should be part of their acceptance and qualification procedures.

Note: NASA has closed this observation through the formal Program Requirements Control Board process. The following summary details NASA's response to the observations and any additional work NASA intends to perform beyond the *Columbia* Accident Investigation Board observation.

BACKGROUND

Initial concerns regarding the use of these A-286 stainless steel fastener materials were initiated due to the brittle fracture mode observed on some Leading Edge Subsystem Carrier Panel bolts. The concern about residual compressive stresses, and to some extent the concerns about Koropon, Room Temperature Vulcanizing 560, Teflon, and Molybdenum Disulfide, emanated from a conjecture that the brittle fracture of some of the bolts could have been caused by Stress Corrosion Cracking (SCC).

For SCC to occur, each of the following conditions must exist:

- Material of concern must be susceptible to SCC
- Presence of an active electrolyte
- Presence of a sustained tensile stress

Additionally, SCC of A-286 fasteners is a concern only under exposure to high temperatures. All fastener installations are protected from such temperature extremes.

NASA IMPLEMENTATION

To address the concern that sustained tensile stress might have contributed to SCC, NASA completed materials analyses on multiple A-286 bolts that exhibited a brittle-like fracture mode (i.e., minimal ductility, flat fracture). The failure analysis included fractography, metallography, and chemical analysis. Furthermore, a research program was executed to duplicate and compare the bolt failures experienced on Columbia. This proved conclusively that the brittle-looking fracture surfaces were produced during bolt failure at temperatures approaching 2000ºF and above. The observed intergranular fracture mechanism is consistent with grain boundary embrittlement at elevated temperatures, along with potential effects from liquid metal embrittlement from vaporized aluminum. The effects of high temperature exposures on A-286 stainless steel materials are not consistent with the SCC concerns.

In addition to this effort, NASA completed residual stress analyses on several A-286 bolts via neutron diffraction at the National Research Council of Canada. In general, residual stresses were determined to be negligible or compressive in the axial bolt direction. The bolts used on the Space Shuttle have a sufficient compressive stress layer, which is governed by appropriate process controls at the manufacturer.

NASA reviewed the manufacturing and material specifications for the A-286 bolts. This review confirmed that only qualified vendors are contracted, manufacturing process controls are sufficient, and Certificates of Compliance are maintained for material traceability. Furthermore, NASA executes material lot testing on all fasteners procured for use in the Shuttle Program to ensure appropriate quality control.

STATUS

NASA has analyzed the requirements and process for A-286 bolts and found that current processes and controls are adequate.

FORWARD WORK

None.

SCHEDULE

None.

BACKGROUND

The planning for return to flight (RTF) began even before the Agency received the first two *Columbia* Accident Investigation Board (CAIB) preliminary recommendations on April 16, 2003. Informally, activities started in mid-February as the Space Shuttle projects and elements began a systematic fault-tree analysis to determine possible RTF constraints. In a more formal sense, the RTF process had its beginnings in a March 2003 Office of Space Flight (OSF) memorandum

Mr. William F. Readdy, the Associate Administrator for Space Flight, initiated the Space Shuttle Return to Flight planning process in a letter to Maj. Gen. Michael C. Kostelnik, the Deputy Associate Administrator for International Space Station and Space Shuttle Programs, on March 12, 2003. The letter gave Maj. Gen. Kostelnik the direction and authority "to begin focusing on those activities necessary to expeditiously return the Space Shuttle to flight."

Maj. Gen. Kostelnik established a Return to Flight Planning Team (RTFPT) under the leadership of veteran astronaut Col. James Halsell. The RTF organization is depicted in figure A-1.

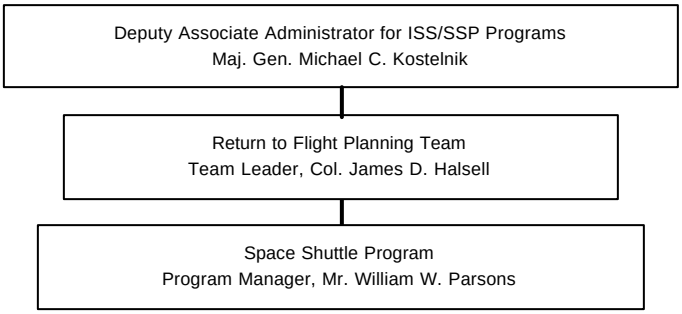

Figure A-1. Original RTFPT organization.

Space Shuttle Program (SSP) Role in Return to Flight

The SSP provided the analyses required to determine the NASA return to flight constraints (RTFCs). SSP project and element fault-tree analyses combined with technical working group documentation and analyses provided the database needed to create a list of potential RTFCs.

For example, the SSP's Orbiter Project organized first as the Orbiter Vehicle Engineering Working Group (OVEWG) to develop fault-tree analyses, and later as the Orbiter Return-to-Flight Working Group to recommend implementation options for RTFCs. The OVEWG structure and its subgroups are listed in figure A-2.

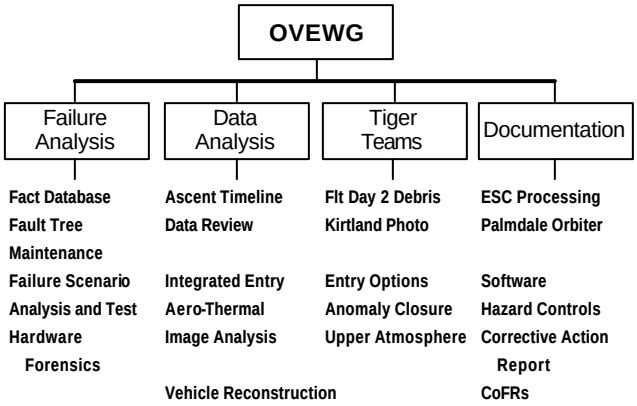

Figure A-2. OVEWG organization.

Once analyses were complete, the working groups briefed the CAIB on their findings and solicited the Space Shuttle Program Requirements Control Board's (SSPRCB's) approval of identified corrective actions.

Each SSP project and element formed similar organizations to accomplish thorough fault-tree analysis and closure.

Return to Flight Planning Team

The RTFPT was formed to address those actions needed to comply with formal CAIB recommendations and NASA initiatives ("Raising the Bar"), and to determine the fastest path for a safe RTF. The approximately 30-member team was assembled with representatives from NASA Headquarters and the OSF Field Centers, crossing the Space Shuttle Operations, Flight Crew Operations, and Safety and Mission Assurance disciplines.

Starting in early April 2003, the RTFPT held weekly teleconferences to discuss core team processes and product delivery schedules. Weekly status reports, describing the progress of RTF constraints, were generated for Maj. Gen. Kostelnik and Dr. Michael Greenfield, one of the Space Flight Leadership Council (SFLC) co-chairs. These reports were also posted on a

secure Web site for the RTFPT membership and other senior NASA officials to review. The RTFPT often previewed RTF briefing packages being prepared for SSPRCBs. The leader of the RTFPT, Col. Halsell, became a voting member of the SSPRCB for all RTF issues. The RTFPT also arranged for all recommended SSPRCB RTF issues to be scheduled for SFLC review and approval. These RTFPT tasks were primarily assessment, status, and scheduling activities. The team's most significant contribution has been preparing and maintaining this Implementation Plan, which is a living document chronicling NASA's RTF.

As the Implementation Plan has matured and obtained SFLC approval, NASA has transitioned from planning for RTF to implementing the plan. As intended, the lead role has transitioned from the RTFPT to the Space Shuttle Program, which is now responsible to the SFLC for executing the plan to successful completion. Accordingly, Maj. Gen. Kostelnik decommissioned the RTFPT on June 7, 2004, and transferred all remaining administrative and coordination duties to the Management Integration and Planning Office (MG) of the Space Shuttle Program, under the direction of former astronaut John Casper. The MG office has established a Return to Flight Branch that is responsible for the coordination of RTF constraint closures with the RTF Task Group.

These changes reflect the real progress toward RTF that has been made in the last few months, and NASA's commitment to optimizing our processes and organization as we execute the RTF Plan.

Space Flight Leadership Council

Cochaired by the Associate Administrator for Space Flight and the Associate Deputy Administrator for Technical Programs, the purpose of the SFLC (figure A-3) was to receive and disposition the joint RTFPT/SSPRCB recommendations on RTF issues. The SFLC is charged with approving RTF items and directing the implementation of specific corrective actions. The SFLC can also direct independent analysis on technical issues related to RTF issues or schedule (e.g., the category of wiring inspection on Orbiter Vehicle (OV)-103/*Discovery*. The membership of the SFLC includes the OSF Center Directors (Johnson Space Center, Kennedy Space Center, Marshall Space Flight Center, and Stennis Space Center) and the Associate Administrator for Safety and Mission Assurance. SFLC meetings are scheduled as needed.

Members of the Return-to-Flight Task Group (RTFTG) are invited to attend the SFLC meetings.

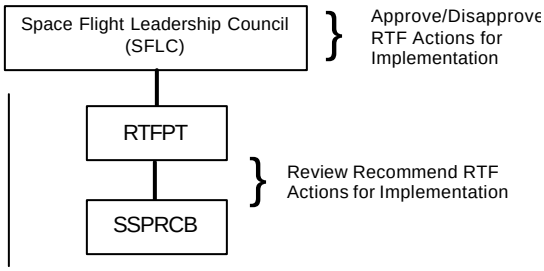

Figure A-3. Space Flight Leadership Council organization for return to flight issue review.

Return to Flight Task Group

Also known as the Stafford Covey Task Group, the RTFTG was established by the NASA Administrator to perform an independent assessment of NASA's actions to implement the CAIB recommendations. The RTFTG was chartered from the existing Stafford International Space Station Operations Readiness Task Force (Stafford Task Force), a Task Force under the auspices of the NASA Advisory Council. The RTFTG is comprised of standing members of the Stafford Task Force, other members selected by the cochair, and a nonvoting ex-officio member: the Associate Administrator for Safety and Mission Assurance. The RTFTG is organized into three panels: technical, operations, and management. The team held its first meeting, primarily for administrative and orientation purposes, in early August 2003, and has been meeting periodically since. The RTFTG has issued two Interim Reports—one in January 2004, and one in May 2004.

Operational Readiness Review

Before RTF, the SFLC will convene one or more meetings to disposition NASA's internal handling of all RTF constraints. The first such meeting, a Flight Certification Review, was held at the Marshall Space Flight Center on December 11-12, 2003.

RTF Schedule

See figure A-4.