Alternate DRM Proposal for Moon Next Scenario

Nov. 15, 2011

Naoki Sato
JAXA Space Exploration Center (JSPEC)

Background

- Current transportation architecture for GER (not only for Moon Next Scenario) is based on:
  - US SLS and MPCV
  - Russian Next Generation Space Launch Vehicle and Spacecraft
  - Large CPS and/or SEP
- Small or Medium elements should be considered in order to have:
  - More flexibilities and robustness of program
  - More possibilities to involve commercial industries and/or International Partners

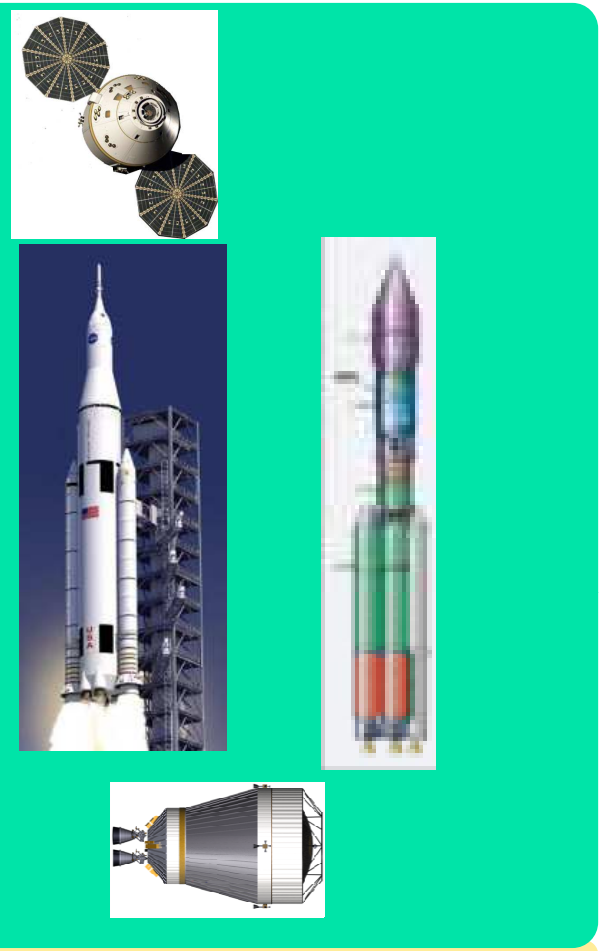

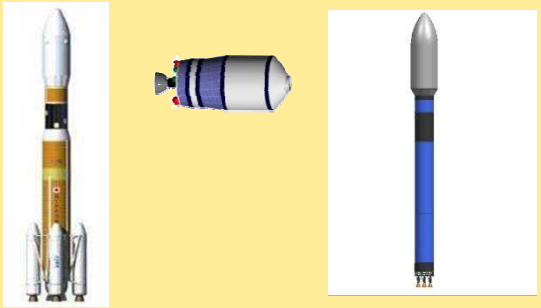

One possibility for Collaborated Mission Scenario

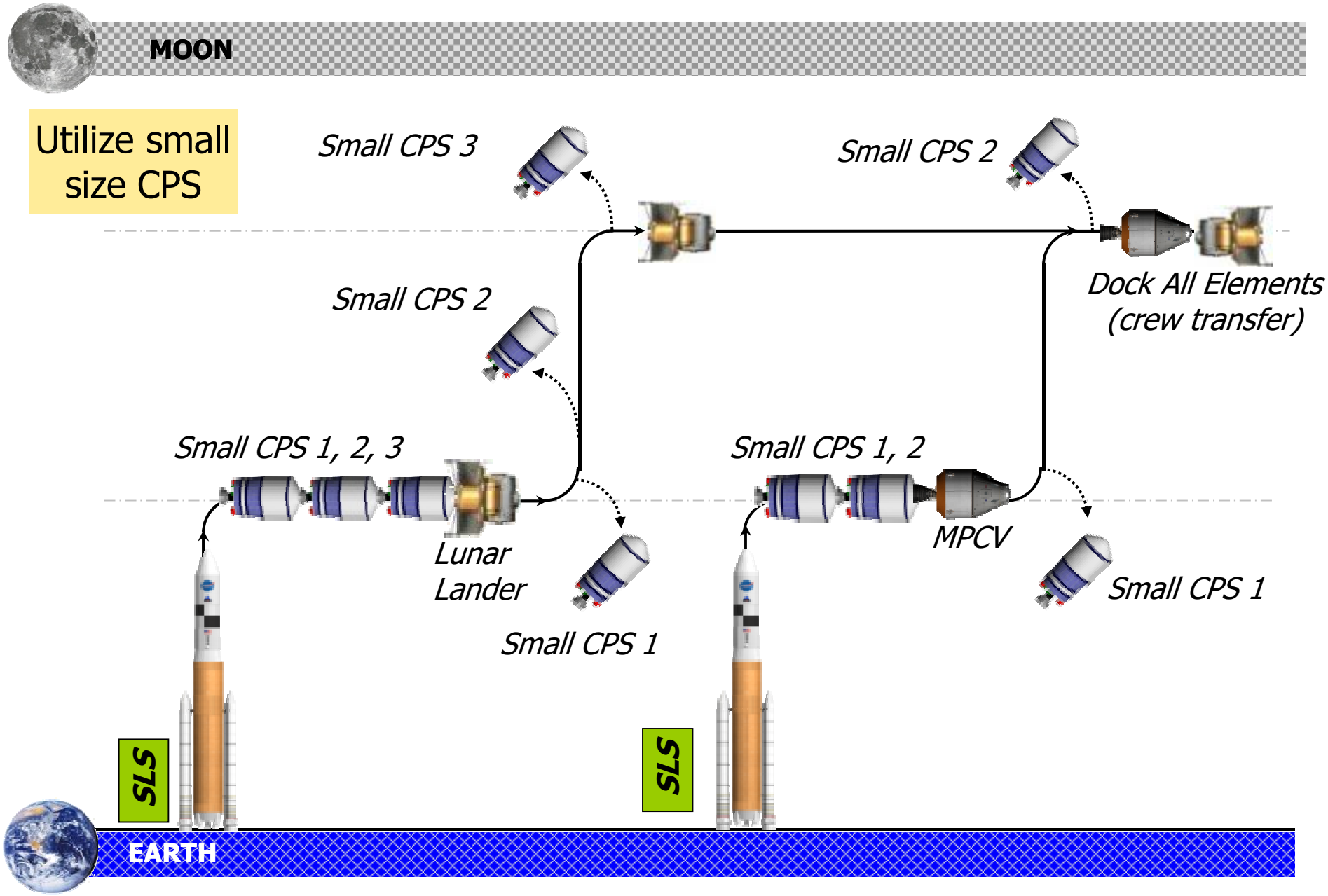

One possibility for Collaborated Mission Scenario

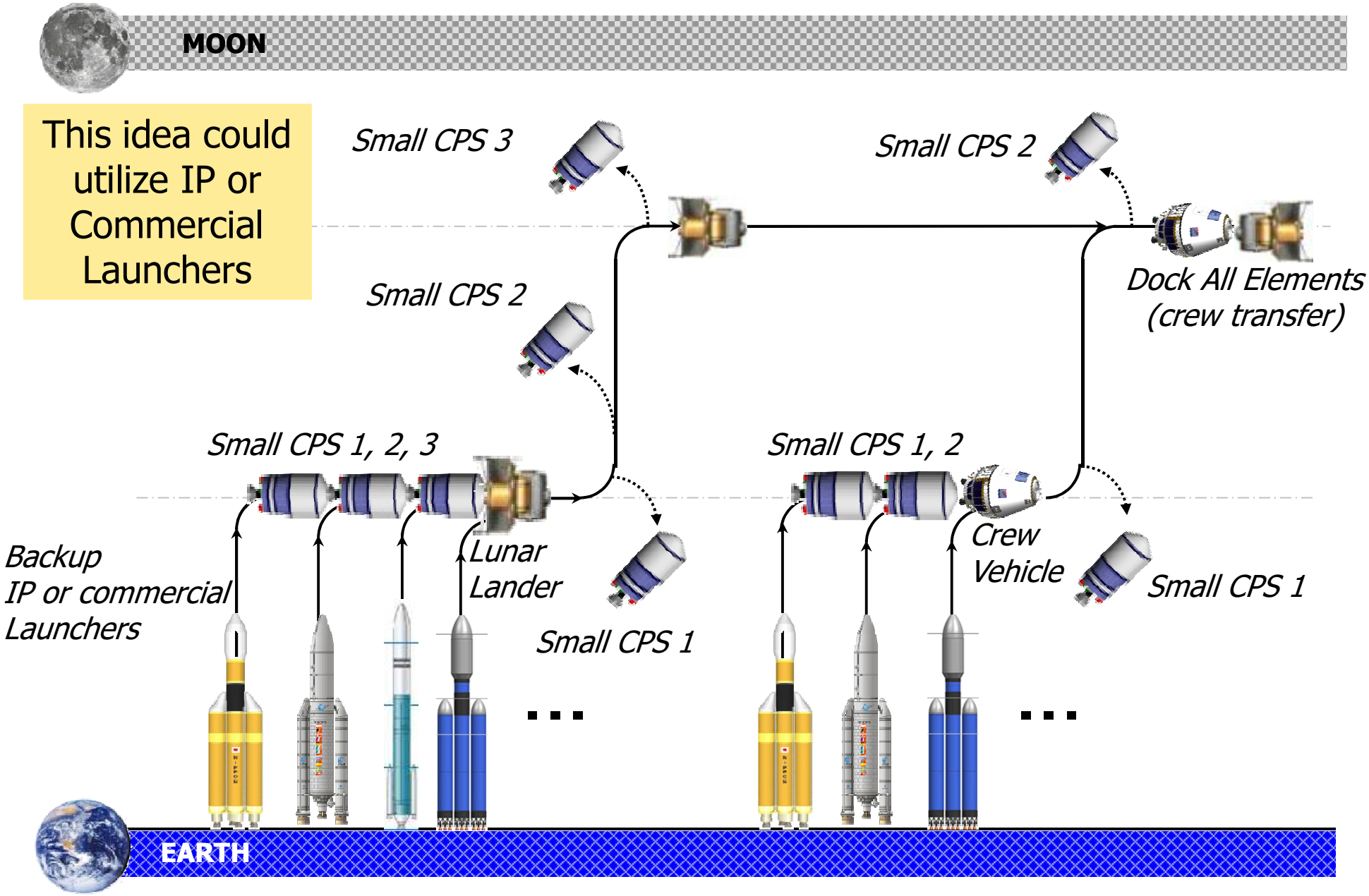

Small CPS Characteristics (notional)

- Length and Diameter will be around 10m x 4m
- Total weight will be 26 t
- Thrust will be around 60 klb
- Includes avionics, propulsion, and attitude control for automated RVD, and power system
- Can be easily tailored to 2nd Stage for Other Launcher

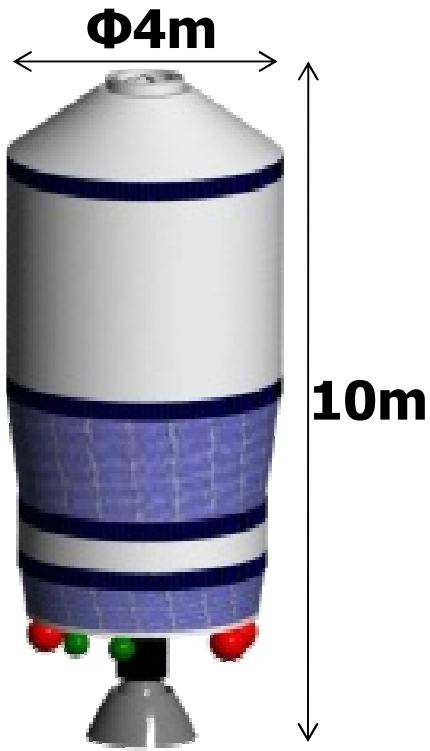

Small CPS

≒

2nd Stage for Other Launcher

Alternate Design Reference Mission Using SEP

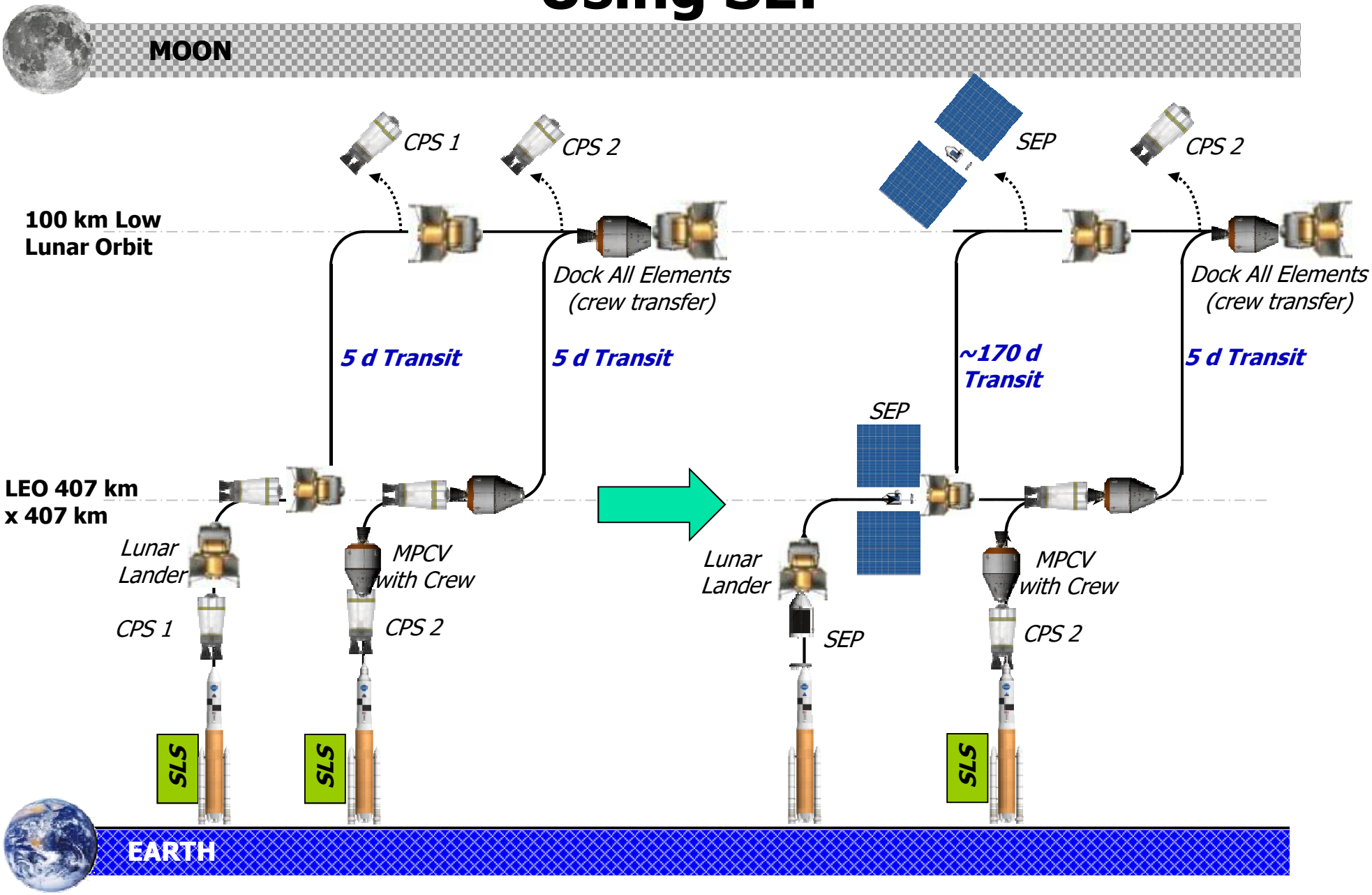

SEP Transportation and Concept

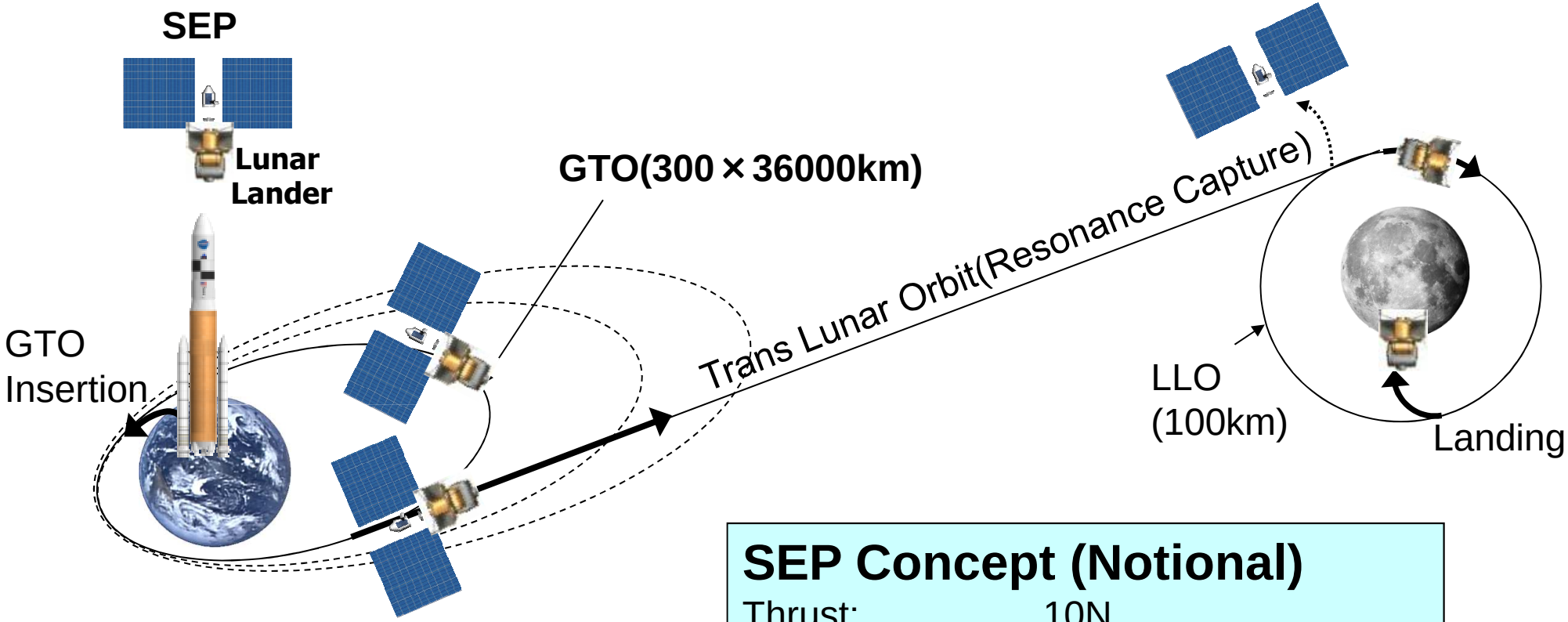

SEP Concept (Notional)

Thrust:	10N
delta V:	3500m/s
Propellant:	8t
Power:	200kW
Total Weight:	**15t**

(*)P/L(Lunar Lander)=35t