STS-134/ULF6

FD 10 Execute Package

MSG	Page(s)	Title
101A	1 - 15	FD10 Flight Plan Revision
102	16	FD10 Mission Summary
103	17 - 19	ULF6 Stowage Overview for FD10
104	20 - 22	ULF6 CD Transfer Note
105	23	JAXA Hardware Relocate
106	24 - 30	Return Locker Layouts
107	31 - 35	JLP CWC-I Relocation Rev B
108	36	ULF6 FD10 Stowage Notes
109	37 - 46	ELC3 CTC MLI Tuck Task
110	47	FD10 Crew Choice Downlink Opportunities

Top 14+2+1 Ways You Can Tell It's a Long Mission:

14) INCO got tired of playing with the cameras
13) You start knowing some ISS acronyms
12) GNC is searching for new stars to align
11) ACO breaks down and requests to deploy PHANTOM, even providing some poetry
10) GC is tying DVIS loops together to see if anyone will notice
9) DPS is converting MET to binary
8) TRAJ is tracking which doors the FCR operators are entering
7) You start contributing to execute pack humor
6) Your shift has finally moved to daylight
5) Transfer tag ups are now interesting to follow
4) The flight control team has finally reached their maximum sugar intake
3) MMACS is hoping to add a printer IFM
2) INCO coffee started tasting OK
1) When asked what day it is you respond by Flight Day X
+2) You hold your badge up to your front door to unlock it
+1) All the B30 vending machines are out of M&Ms, even by the duck pond
++1) EGIL starts getting booed at during AFD discussions on remaining margin

Approved by FAO: *M. Scheib*
Approved by OpsPlan: *K. Howell*

Michael Scheib

Last Updated: May 24 2011 11:28 PM GMT
JEDI *(**J**oint **E**xecute package **D**evelopment and **I**ntegration), v3.0*

MSG INDEX

MSG NO.	TITLE
101	FD10 Flight Plan Revision
102	FD10 Mission Summary
103	ULF6 Stowage Overview for FD10
104	ULF6 CD Transfer Note
105	JAXA Hardware Relocate
106	Return Locker Layouts
107	JLP CWC-I Relocation Rev B
108	ULF6 FD10 Stowage Notes
109	ELC3 CTC MLI Tuck Task
110	FD10 Crew Choice Downlink Opportunities

1. Post-Sleep Cryo Config
   For today's post-sleep cryo config, O2 and H2 tanks 1 & 5 will be active.

   R1 O2,H2 MANF VLV TK1 (two) - OP (tb-OP)

2. Pre-Sleep Cryo Config
   √MCC for deltas prior to configuring for pre-sleep.

   For tonight's pre-sleep cryo config, manifold 2 will be closed with O2 and H2 tanks 2 & 5 active.

   R1 O2,H2 TK2 HTRS A,B (four) - AUTO
   TK1 HTRS A,B (four) - OFF
   MANF VLV TK2 (two) - CL (tb-CL)

3. EVA lenses
   One of the 28mm EVA lenses was reported damaged post EVA1. After reviewing the images it was noticed that the EVA lens cover was not installed for part of the EVA. Please install the EVA lens cover when the camera is not in use. This will prevent inadvertent imagery and will protect EVA lenses from being run into ISS structure. If you feel that Velcro designed to hold the EVA lens cap in place has degraded, please let us know.

4. EVA
   Mark, Drew, Spanky and Taz -
   We're really looking forward to seeing the slow motion hokey pokey in action today! We have a few comments for the plan today:

   Metox Management
   With the successful Soyuz undocking, you can remove the Metox canisters from the Airlock CO2 Removal Receptacle during ISLE EMU Prebreathe (perform Step 45 as written).

   Post EVA Helmet Lights
   Post EVA 3, we're only charging two EHIP batteries (the two Drew used). The two EHIP batteries Spanky used can be stowed in A/L1O1 M-02 Bag s/n 1038.

5. MLI Tuck Task
   A review of on-board imagery has identified a piece of ELC3 CTC MLI that came loose during launch. The MLI is supposed to cover the CTC hinge. If we have time during the EVA, we would like you to tuck the MLI flap underneath the belt of MLI that runs across the CTC under that flap. This task will be treated as a get-ahead and time-permitting we will have you attempt it after the HPGT and IR imagery tasks. If the flap cannot be quickly tucked under the belt then we would like your assessment of adding the task to EVA 4. Message 109 (28-0035) ELC3 CTC MLI Tuck Task contains detailed images of the MLI in it's current and desired configuration.

6. STORRM
   Drew and Mark, Thanks for your help in bringing down all of the STORRM docking camera and VNS data from the DRUs. This concludes the data retrieval phase of the mission and we will no longer require powering up STORRM each day for data retrieval. Your cable troubleshooting appears to have fixed the issue that we saw two days ago on DRU1 while pulling VNS data.

   We are working on a summary of all the issues related to STORRM, and will send you words in a few days.

7. STOWAGE
   For Box and Roberto: We have uplinked message 103: ULF6 Stowage Overview for FD10. This contains the current stowage plan for your Stowage Ops Activities on today's timeline. We have also uplinked MSG107: JLP CWC-I Relocation Rev B, MSG104: ULF6 CD Transfer Note, and MSG105: JAXA Hardware Relocate in support of FD10 Stowage Ops.

8. DTV MUX fans
   We have noticed some erratic behavior with the DTV MUX fans, so when the DTV system is not in use, please power OFF both the left and right switches on L10 (VTR/CC and MUX/VTR/CC).

9. REPLACE PAGES 2-32, 2-34 AND 2-36, AND 3-102 THROUGH 3-111.

REPLANNED

GMT 05/24/11 (144) 13 14 15 16 17 18 19 20 21 22 23 05/25

MET Day 008 008/00 01 02 03 04 05 06 07 08 09 10 11 12

STS 134	FD09				FD10
CDR MARK	EVA PROC	PRE / STL EP / STR EMS / OMS A / PMC A/G	PRE SLEEP	SLEEP	POST SLEEP
PLT BOX	EVA PROC	ILON	PRE SLEEP	SLEEP	LOG POST SLEEP
MS1 SPANKY	EVA PROC		PRE SLEEP	SLEEP	POST SLEEP
MS2 ROBERTO	EVA PROC	MDDK #	PRE SLEEP	SLEEP	LOG POST SLEEP
MS3 DREW	EVA PROC		PRE SLEEP	SLEEP	POST SLEEP
MS4 TAZ	EVA PROC		PRE SLEEP	SLEEP	POST SLEEP

NO EXERCISE

DAY/NIGHT

ORBIT 127 128 129 130 131 132 133 134 135

TDRS W E Z

ISS TDRS AVAIL

ORB ATT BIAS -XLV -ZVV

NOTES ^ACCUM REPRESS
#STATUS CHECK

REPLANNED

GMT 05/25/11 (145): 01 02 03 04 05 06 07 08 09 10 11 12

MET Day 008: 12 13 14 15 16 17 18 19 20 21 22 23 009/00

FD10

STS 134

Crew	Activities
CDR MARK	PMC S/G; ISLE EVA PREP; EMU PURGE; ISLE EMU PREBREATHE; C_LK DPRS; P-DPS; N2-I; P/TV07 EVA; MEAL; N2-T; P/TV07 EVA; P-RPS; C-LK; CPRRS; POST EVA
PLT BOX	POST SLEEP; IL-OFF; INHIB; PAD; IMU; CWC #7; INIT; CWC #7; TERM; CWC XFER; STOWAGE OPS; EXERCISE; MEAL; STOWAGE OPS
MS1 SPANKY	POST SLEEP; ISLE EVA PREP; EMU PURGE; ISLE EMU PREBREATHE; C_LK DPRS; P-DPS; EGRS SETUP; PDGF S/U; RETRAV/; PAMA; PDGF; FGB PDGF; INSTALL; VSC INSTALL; FGB Y-JMPR CH 1/4; LAB EWC CABLE INST; FGB Y-JMPR CH 2/3; FGB CLEANUP; HPGT FRGF MLI INSTL; CLNUP INGRS; P-RPS; C-LK; CPRRS; POST EVA
MS2 ROBERTO	POST SLEEP; MCIDUK*; MDDK#; P/TV07; EVAS S/U; EXERCISE; STOWAGE OPS; MEAL; STOWAGE OPS; ♣
MS3 DREW	POST SLEEP; ISLE EVA PREP; EMU PURGE; ISLE EMU PREBREATHE; C_LK DPRS; P-DPS; EGRS SETUP; PDGF S/U; RETRAV/; PAMA; PDGF; FGB PDGF; INSTALL; VSC INSTALL; FGB Y-JMPR CH 1/4; LAB EWC CABLE INST; FGB Y-JMPR CH 2/3; FGB PHOTO; STP-H3 IR IMAGERY; CLNUP INGRS; P-RPS; C-LK; CPRRS; POST EVA
MS4 TAZ	POST SLEEP; TEST; ISLE EVA PREP; EMU PURGE; ISLE EMU PREBREATHE; C_LK DPRS; P-DPS; **EVA 3 (6:30)** EVA 3 IVA SUPPORT; GLOVE; PHOTO; EVA*

NO EXERCISE: [A]

DAY/NIGHT

ORBIT: 135 136 137 138 139 140 141 142

TDRS: W, E, Z

ISS TDRS AVAIL

ORB ATT: BIAS -XLV -ZVV

NOTES:
*FILTER CK
#STATUS CHECK
♣PRE SLEEP
*D/L
[A] NO UNISOLATED EXERCISE [EVA CREW ON ELC3]

REPLANNED

GMT 05/25/11 (145) 13 14 15 16 17 18 19 20 21 22 23 05/26

MET Day 009 009/00 01 02 03 04 05 06 07 08 09 10 11 12

STS 134	FD10																							FD11
CDR MARK	POST EVA		PMC A/G	PRE SLEEP	POST EVA	TAGUP	PRE SLEEP																	POST SLEEP
PLT BOX	BRIEF	WCS*	PRE SLEEP			OMS^	PRE SLEEP																LOG	POST SLEEP
MS1 SPANKY	POST EVA		PRE SLEEP		POST EVA	TAGUP	PRE SLEEP																ASPRN	POST SLEEP
MS2 ROBERTO	PRE	SLEEP	MDK#	PRE SLEEP																			LOG	POST SLEEP
MS3 DREW	POST EVA		PRE SLEEP		POST EVA	TAGUP	PRE SLEEP																ASPRN	POST SLEEP
MS4 TAZ	PRE SLEEP			BSA INIT	POST EVA	TAGUP	PRE SLEEP																LOG	POST SLEEP

NO EXERCISE

DAY/NIGHT

ORBIT 143 144 145 146 147 148 149 150

TDRS W E Z

ISS TDRS AVAIL

ORB ATT BIAS -XLV -ZVV

NOTES *COMPACT ^ACCUM REPRESS #STATUS CHECK

STS-134/ULF6 FD10

GMT Date 05/24 (144) | W | T D R S E | Z | D/N | O R B | MET Day 008 | A T T

CDR MARK | PLT BOX | MS1 SPANKY | NOTES

21:00 | 22:00 | 23:00 | 00:00

08:00 | 09:00 | 10:00 | 11:00 | 12:00

132 | 133 | 134 | 135

BIAS-XLV-ZVV

SLEEP (CDR MARK)

SLEEP (PLT BOX)

SLEEP (MS1 SPANKY)

FD10 EZ ACTIVITIES:
- √OCAC Filter
- √MDDK Duct Screen
- TEPC Status Check:
  - Verify display is backlit
- HARD REBOOT: STS-2(WINDECOM), STS-3(KFX) & STS-4(RPOP)

POST-SLEEP ACTIVITY (ORB OPS, CREW SYS)

SLEEP LOGBOOK (SDBI 1634)

POST-SLEEP ACTIVITY (ORB OPS, CREW SYS)

POST-SLEEP ACTIVITY (ORB OPS, CREW SYS)

STS-134/ULF6 FD10

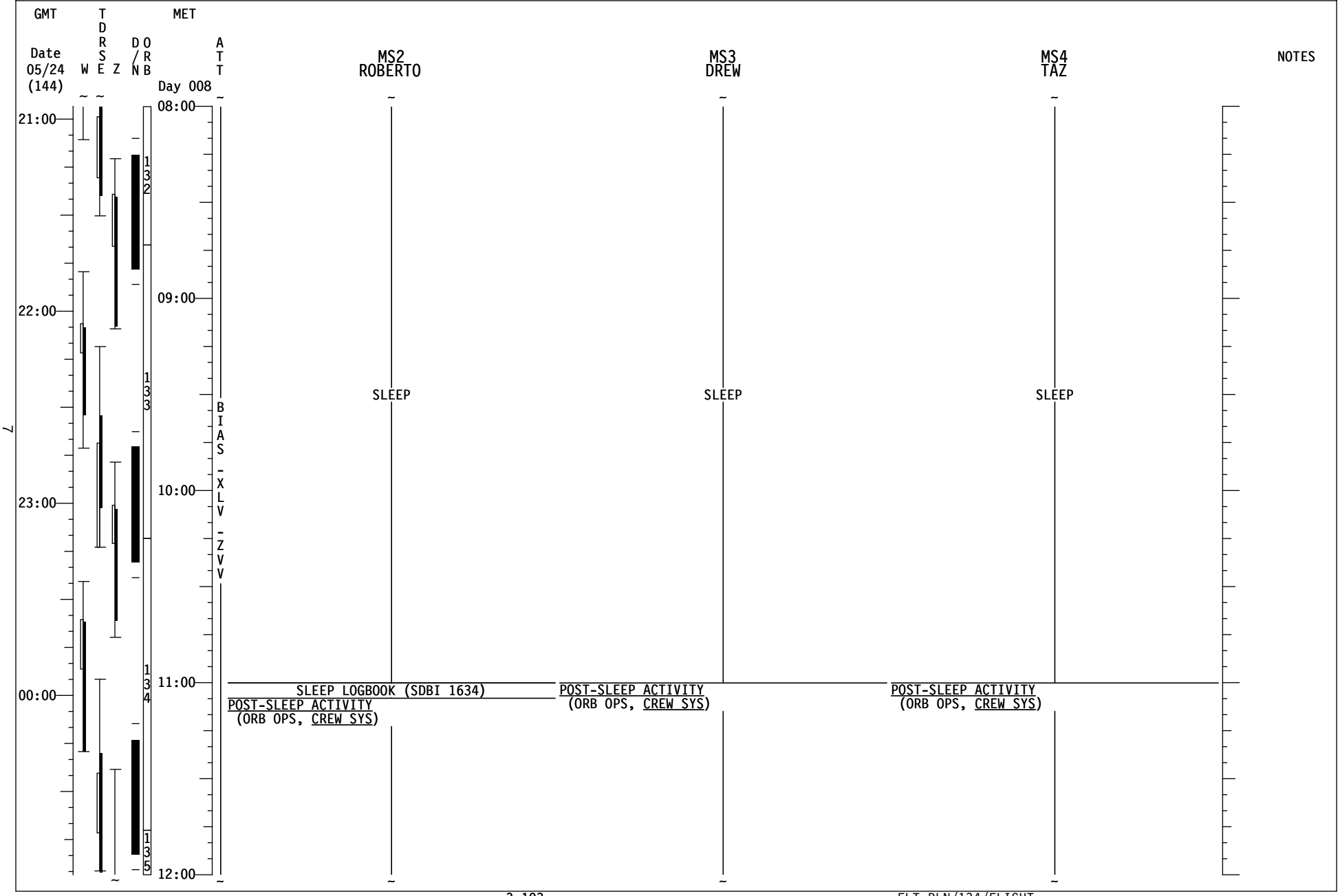

STS-134/ULF6 FD10

GMT Date 05/25 (145) | W | TDRS E | Z | D/N | ORB | MET Day 008 | ATT

CDR MARK | PLT BOX | MS1 SPANKY | NOTES

01:00 02:00 03:00 04:00

12:00 13:00 14:00 15:00 16:00

ORB: 135 136 137

ATT: BIAS-XLV-ZVV

CDR MARK

PRIVATE MEDICAL CONFERENCE
Private Conference via S/G 2

ISS EVA SYSTEMS: 2.325 ISLE EVA PREP
MCC-H Performs Steps 1, 22.8.4 - 22.8.6

ISS EVA SYSTEMS: 1.220 EMU PURGE
MCC-H performs steps 6 and 12

ISS EVA SYSTEMS: 2.330 ISLE EMU PREBREATHE (WITH DATA COLLECTION)
Skip Steps 8, 11 and 15
MCC-H Performs Step 53

PLT BOX

POST-SLEEP ACTIVITY
(ORB OPS, CREW SYS)

ILLUMINATOR OPS (CC,TV) ILLUMINATORS OFF-ALL
EVA 3 INHIBIT PAD (EVA, TIMELINES)
Ref. MSG 086
A7 √WIRELESS VID HTR - ON

IMU STAR OF OPPORTUNITY ALIGN (ORB OPS,GNC)

SHUTTLE/ISS H2O CONTAINER FILL (HC)
(ORB OPS, ECLS) Perform CWC FILL #7
Ref. MSG 030

SHUTTLE/ISS H2O CONTAINER FILL (HC)
(ORB OPS, ECLS)
Perform FILL TERMINATION

Transfer CWC to ISS

MS1 SPANKY

POST-SLEEP ACTIVITY
(ORB OPS, CREW SYS)

ISS EVA SYSTEMS: 2.325 ISLE EVA PREP
MCC-H Performs Steps 1, 22.8.4 - 22.8.6

ISS EVA SYSTEMS: 1.220 EMU PURGE
MCC-H performs steps 6 and 12

ISS EVA SYSTEMS: 2.330 ISLE EMU PREBREATHE (WITH DATA COLLECTION)
Skip Steps 8, 11 and 15
MCC-H Performs Step 53

STS-134/ULF6 FD10

GMT Date 05/25 (145) | W | T D R S E | Z | D/N | O R B | MET Day 008 | A T T

MS2 ROBERTO

12:00 — POST-SLEEP ACTIVITY (ORB OPS, CREW SYS)

13:00 — BIAS-XLV-ZVV

14:00 — L17 Check MCIU filter screen

CGBA STATUS CHK; GLACIER STATUS CHK (CC)

P/TV07 EVA (PHOTO/TV, SCENES) SETUP

15:00 — EXERCISE

STOWAGE OPS Ref. MSG 103

16:00

MS3 DREW

POST-SLEEP ACTIVITY (ORB OPS, CREW SYS)

ISS EVA SYSTEMS: 2.325 ISLE EVA PREP
MCC-H Performs Steps 1, 22.8.4 - 22.8.6

ISS EVA SYSTEMS: 1.220 EMU PURGE
MCC-H performs steps 6 and 12

ISS EVA SYSTEMS: 2.330 ISLE EMU PREBREATHE (WITH DATA COLLECTION)
Skip Steps 8, 11 and 15
MCC-H Performs Step 53

MS4 TAZ

POST-SLEEP ACTIVITY (ORB OPS, CREW SYS)

P/TV:3.710 D2Xs EVA CAMERA TEST 2 Cameras

ISS EVA SYSTEMS: 2.325 ISLE EVA PREP
MCC-H Performs Steps 1, 22.8.4 - 22.8.6

ISS EVA SYSTEMS: 1.220 EMU PURGE
MCC-H performs steps 6 and 12

ISS EVA SYSTEMS: 2.330 ISLE EMU PREBREATHE (WITH DATA COLLECTION)
Skip Steps 8, 11 and 15
MCC-H Performs Step 53

NOTES

STS-134/ULF6 FD10

GMT Date 05/25 (145) | W | TDRS E | Z | D/N | ORB | MET Day 008 | ATT

05:00 06:00 07:00 08:00

ORB: 137 138 139 140

ATT: BIAS-XLV-ZVV

MET	CDR MARK	PLT BOX	MS1 SPANKY	NOTES
16:00	ISS EVA SYSTEMS: 2.330 ISLE EMU PREBREATHE (WITH DATA COLLECTION) Skip Steps 8, 11 and 15 MCC-H Performs Step 53	Transfer CWC to ISS STOWAGE OPS Ref. MSG 103	ISS EVA SYSTEMS: 2.330 ISLE EMU PREBREATHE (WITH DATA COLLECTION) Skip Steps 8, 11 and 15 MCC-H Performs Step 53	
	ISS EVA SYSTEMS: CREWLOCK DEPRESS/REPRESS CC Perform CREWLOCK DEPRESS		ISS EVA SYSTEMS: CREWLOCK DEPRESS/REPRESS CC Perform CREWLOCK DEPRESS	
	ISS EVA SYS:C-LK DPRS/RPRS CC POST DEPRESS		ISS EVA SYS:C-LK DPRS/RPRS CC POST DEPRESS	
17:00	N2 REPRESS INIT [A]			
	P/TV07 EVA (PHOTO/TV, SCENES) OPS	[A] N2 REPRESS USING PAYLOAD N2 VLVS (ORB OPS, ECLS) Steps 1, 3-7 MCC will TMBU SM Limits	EGRESS/SETUP	
18:00		EXERCISE	PDGF S/U	
			RETRIEVE PAMA/PDGF	
			FGB PDGF INSTALL	
			VSC INSTALL	
19:00	MEAL	MEAL	FGB Y-JMPR CH 1/4	
		[B] N2 REPRESS USING PAYLOAD N2 VLVS (ORB OPS, ECLS) Steps 8-13 MCC will TMBU SM Limits		
	N2 REPRESS TERM [B]			
20:00	P/TV07 EVA (PHOTO/TV, SCENES) OPS	STOWAGE OPS Ref. MSG 103	LAB EWC CABLE INST	

STS-134/ULF6 FD10

GMT Date 05/25 (145) | W | TDRS E | Z | D/N | ORB | MET Day 008 | ATT | MS2 ROBERTO | MS3 DREW | MS4 TAZ | NOTES

05:00 06:00 07:00 08:00

ORB: 137 138 139 140

16:00 17:00 18:00 19:00 20:00

ATT: BIAS-XLV-ZVV

MS2 ROBERTO

- STOWAGE OPS Ref. MSG 103
- MEAL
- STOWAGE OPS Ref. MSG 103

MS3 DREW

- ISS EVA SYSTEMS: 2.330 ISLE EMU PREBREATHE (WITH DATA COLLECTION) Skip Steps 8, 11 and 15 MCC-H Performs Step 53
- ISS EVA SYSTEMS: CREWLOCK DEPRESS/REPRESS CC Perform CREWLOCK DEPRESS
- ISS EVA SYS:C-LK DPRS/RPRS CC POST DEPRESS
- EGRESS/SETUP
- PDGF S/U
- RETRIEVE PAMA/PDGF
- FGB PDGF INSTALL
- VSC INSTALL
- FGB Y-JMPR CH 1/4
- LAB EWC CABLE INST

MS4 TAZ

- ISS EVA SYSTEMS: 2.330 ISLE EMU PREBREATHE (WITH DATA COLLECTION) Skip Steps 8, 11 and 15 MCC-H Performs Step 53
- ISS EVA SYSTEMS: CREWLOCK DEPRESS/REPRESS CC Perform CREWLOCK DEPRESS
- ISS EVA SYS:C-LK DPRS/RPRS CC POST DEPRESS
- IVA SUPPORT EVA 3

STS-134/ULF6 FD10

GMT Date 05/25 (145) | W | TDRS E | TDRS Z | D/N | ORB | MET Day 008 | ATT

09:00 10:00 11:00 12:00

ORB: 140 141 142

ATT: BIAS -XLV -ZVV

20:00 21:00 22:00 23:00 00:00

CDR MARK

P/TV07 EVA
(PHOTO/TV, SCENES)
OPS

ISS EVA SYS: C-LK DPRS/RPRS CC PRE REPRESS
ISS EVA SYSTEMS: CREWLOCK DEPRESS/REPRESS CC
Perform CREWLOCK REPRESS
ISS EVA SYSTEMS: 1.240 POST EVA
Without H2O RECHARGE
Skip Steps 37-39, 51, 66
MCC-H will perform Steps 43, 67-68

PLT BOX

STOWAGE OPS
Ref. MSG 103

MS1 SPANKY

LAB EWC CABLE INST

FGB Y-JMPR CH 2/3

AIRLOCK TOOLBOX TOOL STOW

HPGT FRGF MLI INSTALL

CLEANUP/INGRESS

ISS EVA SYS: C-LK DPRS/RPRS CC PRE REPRESS
ISS EVA SYSTEMS: CREWLOCK DEPRESS/REPRESS CC
Perform CREWLOCK REPRESS
ISS EVA SYSTEMS: 1.240 POST EVA
Without H2O RECHARGE
Skip Steps 37-39, 51, 66
MCC-H will perform Steps 43, 67-68

NOTES

NO UNISOLATED EXERCISE [EVA CREW ON ELC3]

STS-134/ULF6 FD10

GMT Date 05/25 (145) | W | TDRS E | TDRS Z | D/N | ORB | MET Day 008 | ATT

09:00 10:00 11:00 12:00

140 141 142

20:00 21:00 22:00 23:00 00:00

BIAS -XLV -ZVV

STOWAGE OPS
Ref. MSG 103

PRE-SLEEP ACTIVITY
(ORB OPS, CREW SYS)

MS2 ROBERTO

MS3 DREW

LAB EWC CABLE INST

FGB Y-JMPR CH 2/3

PDGF/FGB THRUSTER PHOTOS

STP-H3 IR IMAGERY

CLEANUP/INGRESS

ISS EVA SYS: C-LK DPRS/RPRS CC PRE REPRESS

ISS EVA SYSTEMS: CREWLOCK DEPRESS/REPRESS CC
Perform CREWLOCK REPRESS

ISS EVA SYSTEMS: 1.240 POST EVA
Without H2O RECHARGE
Skip Steps 37-39, 51, 66
MCC-H will perform Steps 43, 67-68

MS4 TAZ

IVA SUPPORT EVA 3

ISS EVA SYSTEMS:1.241 POST EVA GLOVE PHOTOS

PTV: 3.725 D2XS EVA CAMERA TURNAROUND-CAMERA ONLY Step 1 For 2 EVA Cameras

NOTES

NO UNISOLATED EXERCISE [EVA CREW ON ELC3]

STS-134/ULF6 FD10

GMT Date 05/25 (145) | W | TDRS E | Z | D/N | ORB | MET Day 009 | ATT

13:00 14:00 15:00 16:00

143 144 145

BIAS -XLV -ZVV

00:00 01:00 02:00 03:00 04:00

CDR MARK

ISS EVA SYSTEMS: 1.240 POST EVA
Without H2O RECHARGE
Skip Steps 37-39, 51, 66
MCC-H will perform Steps 43, 67-68

L9 PS AUD A/G 1,2 (two) - OFF
PRIVATE MEDICAL CONFERENCE
Private Conference via A/G 2

PRE-SLEEP ACTIVITY
(ORB OPS, CREW SYS)

POST EVA TAGUP
Private Conference via S/G 2

PRE-SLEEP ACTIVITY
(ORB OPS, CREW SYS)

SLEEP

PLT BOX

STOWAGE BRIEF
Call down status to MCC via A/G2

WCS COMPACTOR OPS (DUAL-VANE)
(ORB OPS, CUE CARD)

PRE-SLEEP ACTIVITY
(ORB OPS, CREW SYS)

C C3 OMS ENG LEFT - ARM/PRESS (Wait 5 Seconds)
- OFF

L OMS ACCUM REPRESS C

PRE-SLEEP ACTIVITY
(ORB OPS, CREW SYS)

SLEEP

MS1 SPANKY

ISS EVA SYSTEMS: 1.240 POST EVA
Without H2O RECHARGE
Skip Steps 37-39, 51, 66
MCC-H will perform Steps 43, 67-68

PRE-SLEEP ACTIVITY
(ORB OPS, CREW SYS)

POST EVA TAGUP
Private Conference via S/G 2

PRE-SLEEP ACTIVITY
(ORB OPS, CREW SYS)

SLEEP

NOTES

CREW WAKE AT 09/11:00

STS-134/ULF6 FD10

GMT Date 05/25 (145) | W | TDRS E | Z | D/N | ORB | MET Day 009 | ATT

13:00 14:00 15:00 16:00

143 144 145

BIAS -XLV -ZVV

00:00 01:00 02:00 03:00 04:00

MS2 ROBERTO

PRE-SLEEP ACTIVITY
(ORB OPS, CREW SYS)

CGBA STATUS CHK; GLACIER STATUS CHK (CC)

PRE-SLEEP ACTIVITY
(ORB OPS, CREW SYS)

SLEEP

MS3 DREW

ISS EVA SYSTEMS: 1.240 POST EVA
Without H2O RECHARGE
Skip Steps 37-39, 51, 66
MCC-H will perform Steps 43, 67-68

PRE-SLEEP ACTIVITY
(ORB OPS, CREW SYS)

POST EVA TAGUP
Private Conference via S/G 2

PRE-SLEEP ACTIVITY
(ORB OPS, CREW SYS)

SLEEP

MS4 TAZ

PRE-SLEEP ACTIVITY
(ORB OPS, CREW SYS)

ISS EVA SYSTEMS: 1.605 BSA BATTERY RECHARGE
INITIATE
Ref. STS-134 EVA BATTERY CHARGE PLAN (CC)

POST EVA TAGUP
Private Conference via S/G 2

PRE-SLEEP ACTIVITY
(ORB OPS, CREW SYS)

SLEEP

NOTES

CREW WAKE AT 09/11:00

MSG 102 – FD10 MISSION SUMMARY

Good Morning Endeavour!!!!
Great job helping out station yesterday!!!
Thanks so much!
Happy EVA 3 day!!!!!

YOUR CURRENT ORBIT IS: 187 X 183 NM

NOTAMS -

EDW -	EDW 22L/04R IN USE. EDT 22R/04L EMERGENCY DAY USE ONLY.
EDW -	LAKEBED RWYS RED.
NOR -	LAKEBED RWYS GREEN.
ILM -	RWY 06/24 CLSD.
HNL -	RWY 08R/26L CLSD.
NTU -	RWY 05R/23L CLSD.
FFA -	NOT USABLE. IN CARETAKER STATUS.
LAJ -	RWY WIDTH REDUCED TO 154' - EAST SIDE OF RWY CLSD.
BEN -	NOT USABLE. NOT SUPPORTED.
IKF -	NOT USABLE. NO AGREEMENT.

NEXT 2 PLS OPPORTUNITIES:

EDW22	ORB 141 – 8/21:45	SKC	7	240/8P12
KSC15	ORB 155 – 9/19:02	FEW020	7	140/6P10

OMS TANK FAIL CAPABILITY:

NO

LEAKING OMS PRPLT BURN:

L or R OMS LEAK: ALWAYS BURN RETROGRADE

OMS QUANTITIES(%)

L OMS	OX = 33.23	R OMS	OX = 34.28
	FU = 33.24		FU = 33.95

FOR CURRENT QTYS, SUBTRACT INCN'T COUNTER

DELTA V AVAILABLE:

OMS	346 FPS
ARCS (TOTAL ABOVE QTY1)	46 FPS
TOTAL IN THE AFT	392 FPS
ARCS (TOTAL ABOVE QTY2)	79 FPS
FRCS (ABOVE QTY 1)	32 FPS
AFT QTY 1	82 %
AFT QTY 2	44 %

END OF PAGE 1 OF 1, MSG 102

Box and Roberto,

You guys have done an awesome job so far! We have a follow up action for ULF6 Unpack below. After that, you are free to work on ATV2 or any of your other Stowage Tasks. We recommend first working on ATV and CWC-I Relocation, because you should be able to finish those today. If you finish early, then any of the other Stowage Tasks can be done. If you have any questions or difficulties, please call down at any point.

Good luck!!

- *ATV2/ ULF6 ISO Team: Kelly, Mike, Jaclyn, Misty, Eryx, & Nikhail*

ULF6 Unpack

- Item 31.2.5, Red IVIS Box did not fit inside LAB1D4_K2 and was temp stowed on the LAB1D4 rack front. We are going to have you do a little stowage shuffle to make this work. Restow items according to the table below.

#	Item	Unstow	Restow	Notes
1	BP-ECG Kit [S/N 1002]	LAB1D4_G1	Bag G	Transfer Item #902
2	Treadmill Harnesses and Ziplock of Series Bungee System Assemblies (SBS)	LAB1D4_K2	LAB1D4_G1	
3	Red IVIS Box [S/N 1005]	LAB1D4 Rack Front	LAB1D4_K2	

ATV Choreography:

Box and Roberto – ATV Cargo Ops: Reference 27-0662 (MSG 134-078) - ATV2 Cargo List

Note: You will be referencing the Unpack tab and the Trash tab in the excel file.

1. Mount RFTA bags on ATV2P2
    a. Trash items 712-712.2, 735-735.2
    b. The RFTA foam cap from 712.2 will need to be removed and stowed back in the PMM before you transfer the RFTA to ATV for disposal.

2. Mount RFTA bag on ATV2S2
    a. Trash items 959, 959.1
    b. Mount the M-01 bag on the center 2nd and 3rd adapter plates. This bag is significantly heavier than any other trash item.

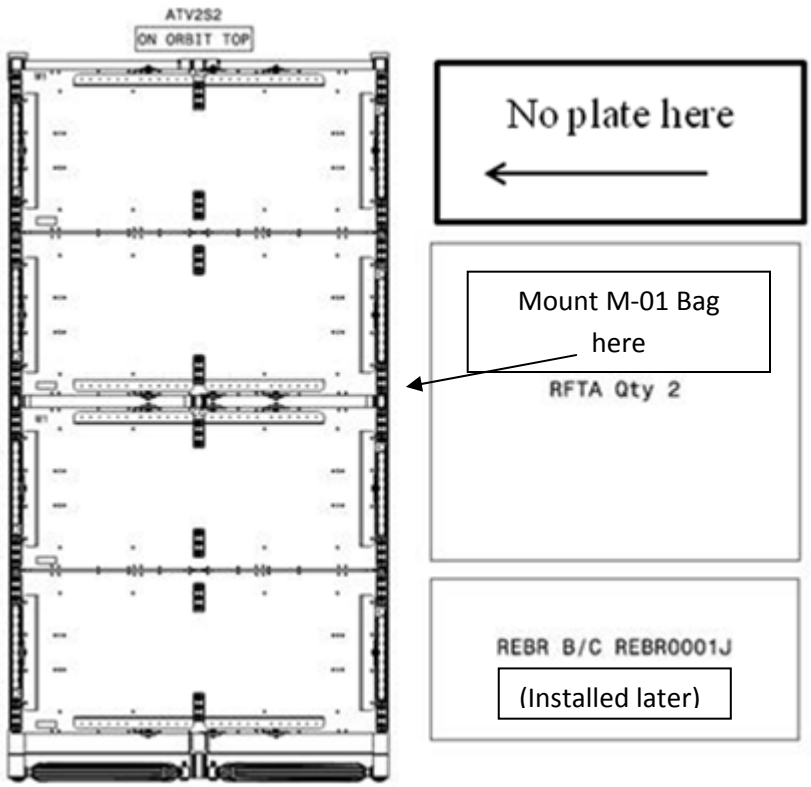

3. Deploy 2nd TSR
    a. Use US SODF; ATV Cargo Ops: Initial Setup; 1.200 TEMPORARY STOWAGE RACK (TSR) INSTALLATION.
    c. Unpack Items 8-8.3, related trash item 309
    d. Unpack item 6, the empty 1.0 CTB, can be transferred to the NOD3A2 CTB farm if it is still in ATV.

4. Trash ULF6 foam

    Trash items 203 – 206. If you have any difficulty with the stowage locations given please let us know. Foam is allowed to protrude the rack front as long as it is secured well, and won't free-float.

Stowage Tasks

1. Relocate CTBs w/CWC-Is from JLP to PMM Standoffs (5 hours total – but can be done in 1 hour increments)
    a. Two crew working simo is recommended for this procedure. This activity involves rotating RSPs and/or removing cargo from rack bays to access the standoff areas.
    b. Execute per message 28-0032 (MSG 134-107): JLP CWC-I Relocation
2. Relocate JAXA Cargo from PMM to JEM (1 hour)
    a. This activity involves relocating a few JAXA items from US stowage locations to permanent homes within the JPM and JLP. It is recommended that you perform this after #1 above since one of the JLP locations must be cleared of CWC-Is prior to the JAXA item being restowed.
    b. Execute per 27-0530 (MSG 134-105): JAXA Hardware Relocate
3. Swap CD's from ULF6 (2 hours)
    a. This activity will have you configure the CD cases onboard to include the ULF6 CD's and config other CD's for return on ULF7.
    b. Execute per 27-0429 (MSG 134-104): ULF6 CD Transfer Note

ULF6 CD Transfer

Procedure:

1. Un-stow:

Part Name	Part Number	Barcode	Location
Ops CD Transfer Case (ULF6 CD Library)	SEZ12100588-301	00134811K	**LAB1S5_A1**
CD Library (Vol 2)	SEZ12100588-301	POC90133J	
CD Library (Vol 3a)	SEZ12100588-301	POC90121J	

2. Using Table A, retrieve a sharpie and label items 1 through 2 with the indicated slot number.

Table A - DVDs in CD Library Volume 2 that need to be labeled

Item #	Volume	Slot	Title	S/N
Volume 2				
1	2	60	ISSAC Flight Software DVD 1 Version 2 PM (1/1)	2096
2	2	61	ISSAC Flight Software DVD 1 Version 2 BU (1/1)	2097

3. Using Table B, remove the items 3 through 8 from CD Library Volume 2, and place in empty slots of the Ops CD Transfer Case (00134811K) “Return to Ground” section.

Table B - CDs/DVDs to be removed from CD Library Volume 2 for Return

Item #	Volume	Slot	Title	S/N
Volume 2				
3	2	80	ULF5 Station Operations Data File (IPV)-DVD, BU (1/1)	2078
4	2	81	ULF5 Station Operations Data File (IPV)-DVD, BU (1/1)	2081
5	2	85	MOOT 7.gho DVD Image, BU (1/1)	2068
6	2	86	MOOT 7.gho DVD Image, BU (1/1)	2069
7	2	139	PLT Onboard SW Ghost Image DVD, PM (1/1)	1762
8	2	165	MPPLL Laptop Software V3, PM (1/1)	ESO-IT-DC-0771

4. Using Table C, remove items 9 through 16 from the CD Library Volume 3a and place in empty slots of the Ops CD Transfer Case (00134811K) “Return to Ground” section.

Table C - CD’s/DVDs to be removed from CD Library Volume 3a for Return

Item #	Volume	Slot	Title	S/N
Volume 2				
9	3a	159	CREW REQUESTED ITEM	1981
10	3a	160	CREW REQUESTED ITEM	1982
11	3a	162	CREW REQUESTED ITEM	1983
12	3a	163	CREW REQUESTED ITEM	1984
13	3a	164	CREW REQUESTED ITEM	1985
14	3a	165	CREW REQUESTED ITEM	1986
15	3a	175	CREW REQUESTED ITEM	1988
16	3a	176	CREW REQUESTED ITEM	1989

5. Using Table D, remove items 17 through 31 from the Ops CD Transfer Case (00134811K) and place in the indicated slot of CD Library Volume 2.

Table D - New CD's/DVDs to be placed into CD Library Volume 2

Item	Volume	Slot	Title	S/N
Volume 3a				
17	2	06	R13.002 EPIC Patch Prime (1 of 1)	2172
18	2	56	R13.002 EPIC Patch Backup (1 of 1)	2174
19	2	80	ULF6 Station Operations Data File (IPV)-DVD, BU (1/1)	3010
20	2	81	ULF6 Station Operations Data File (IPV)-DVD, BU (1/1)	3011
21	2	85	MOOT 8.gho DVD Image, PM (1/1)	3000
22	2	86	MOOT 8.gho DVD Image, BU (1/1)	3001
23	2	141	MLT2 Onboard Software Backup Image (1 of 2)	3014
24	2	142	MLT2 Onboard Software Backup Image (2 of 2)	3017
25	2	172	EXPRESS Laptop Release 8 Prime (1 of 1)	3026
26	2	173	EXPRESS Laptop Release 8 Backup (1 of 1)	3027
27	2	174	Hauppauge Video Driver Prime (1 of 1)	2410
28	2	175	Hauppauge Video Driver Backup (1 of 1)	2411
29	2	176	Glacier Flight Laptop Application Prime (1 of 1)	2414
30	2	177	Glacier flight Laptop Application Backup (1 of 1)	2415
31	2	165	FSL Laptop SW Flight V. 4 PM (1/1)	ESO-IT-DC-2009

6. Using Table E, remove items 32 through 56 from the Ops CD Transfer Case (00134811K) and place in the indicated slot of CD Library Volume 3a.

Table E - New CD's/DVDs to be placed into CD Library Volume 3a

Item	Volume	Slot	Title	S/N
Volume 3a				
32	3a	158	COMMERCIAL ITEM- CREW REQUESTED ITEM	-
33	3a	159	COMMERCIAL ITEM- CREW REQUESTED ITEM	-
34	3a	160	COMMERCIAL ITEM- CREW REQUESTED ITEM	-
35	3a	161	COMMERCIAL ITEM- CREW REQUESTED ITEM	-
36	3a	162	COMMERCIAL ITEM- CREW REQUESTED ITEM	-
37	3a	163	COMMERCIAL ITEM- CREW REQUESTED ITEM	-
38	3a	164	COMMERCIAL ITEM- CREW REQUESTED ITEM	-
39	3a	165	COMMERCIAL ITEM- CREW REQUESTED ITEM	-
40	3a	166	COMMERCIAL ITEM- CREW REQUESTED ITEM	-
41	3a	167	COMMERCIAL ITEM- CREW REQUESTED ITEM	-
42	3a	168	COMMERCIAL ITEM- CREW REQUESTED ITEM	-
43	3a	169	COMMERCIAL ITEM- CREW REQUESTED ITEM	-
44	3a	170	COMMERCIAL ITEM- CREW REQUESTED ITEM	-
45	3a	171	COMMERCIAL ITEM- CREW REQUESTED ITEM	-
46	3a	172	COMMERCIAL ITEM- CREW REQUESTED ITEM	-
47	3a	173	COMMERCIAL ITEM- CREW REQUESTED ITEM	-
48	3a	174	COMMERCIAL ITEM- CREW REQUESTED ITEM	-
49	3a	175	COMMERCIAL ITEM- CREW REQUESTED ITEM	-
50	3a	176	COMMERCIAL ITEM- CREW REQUESTED ITEM	-
51	3a	177	COMMERCIAL ITEM- CREW REQUESTED ITEM	-
52	3a	178	COMMERCIAL ITEM- CREW REQUESTED ITEM	-

53	3a	179	COMMERCIAL ITEM- CREW REQUESTED ITEM	-
54	3a	180	COMMERCIAL ITEM- CREW REQUESTED ITEM	-
55	3a	181	COMMERCIAL ITEM- CREW REQUESTED ITEM	-
56	3a	182	COMMERCIAL ITEM- CREW REQUESTED ITEM	-

7. If any discrepancies are found for the slots listed in Table A - E above, mark them on the Master List and report to MCC-H. Include Volume #, slot #, and CD/DVD Title to ensure ground libraries match the onboard libraries.

NOTE:
A new CD Library Volume 2 Master List will only be up-linked if requested by crew.

8. Using Table F below, move the hardware from the Ops CD Transfer Case (00134811K) into the location listed.

Table F – Hardware to be moved from the Ops CD Transfer Case to a specified location.

Item #	Part Name	P/N	S/N	Pocket	ISS Location
1.	I POD Headphones [Qty: 12]	SEZ33117876-001	-	D	**PMM1S3_A1** 1.0 CTB: T61p Laptop Hardware 1, S/N 1024, B/C 002909J

9. Remove ULF6 Volume 2 and Volume 3a CD Library Master Lists located in the front of the Ops CD Transfer Case (00134811K) and place in the front flap of the respective CD Library.

10. Restow CD Library Volume 2, Volume 3a and the Ops CD Transfer Case (00134811K) in **LAB1S5_A1**.

Increment 27: JAXA Hardware Relocate

Goal: To relocate JAXA hardware into the JEM.

Duration: 1 Hour

Procedure:
1. RELOCATE items per Table A.
2. REPORT your results to MCC-H. We will update IMS for you.

Table A: JAXA Hardware

✓	Ref #	Current Location	Item	S/N	B/C	Qty	New Location	Notes
	1	**LAB1P4_B2**	1.0 CTB: JAXA Consumables ES/PL	1339	CTB00005J	1	**JPM1O3_B1**	
	2	**LAB1P4_J2**	1.0 CTB: JAXA-RYUTAI L&M/SAIBO	1223	006719J	1	**JLP1F2** (behind Hard Dummy Panel)	
	2.1		PCMCIA Card	6 7 8 9 10	00001301E 00001307E 00001313E 00001282E 00001288E	5	**COL1D4_G1** (3D Space Kit B, B/C 00048116R)	
	3	**LAB1P4_L1**	Jettison Stowage Bag	0021 0022 0023 0024 0025	JSB00021N JSB00022N JSB00023N JSB00024N JSB00025N	5	**JPM1O3_B1** (1.0 CTB: POT LUCK BAG, S/N 1099, B/C 004093J)	
	4	**NOD3A2**	Empty 3.0 CTB	**Report**	**Report**	1	**JLP1F2** (behind Hard Dummy Panel)	
	4.1	**PMM1P4_K1**	FPEF Silicone Filter Unit	001	FPEIFUZ2N	1		Stow in the 3.0 CTB.

MSG 106 - RETURN LOCKER LAYOUTS

Good morning STS-134 Flight Crew,
The following pages contain the latest return Modular Locker layout along with the return bag layouts. Any updates will be submitted via another message.
Please let us know if you have any questions or comments.
-The STS-134 Middeck Stowage Team

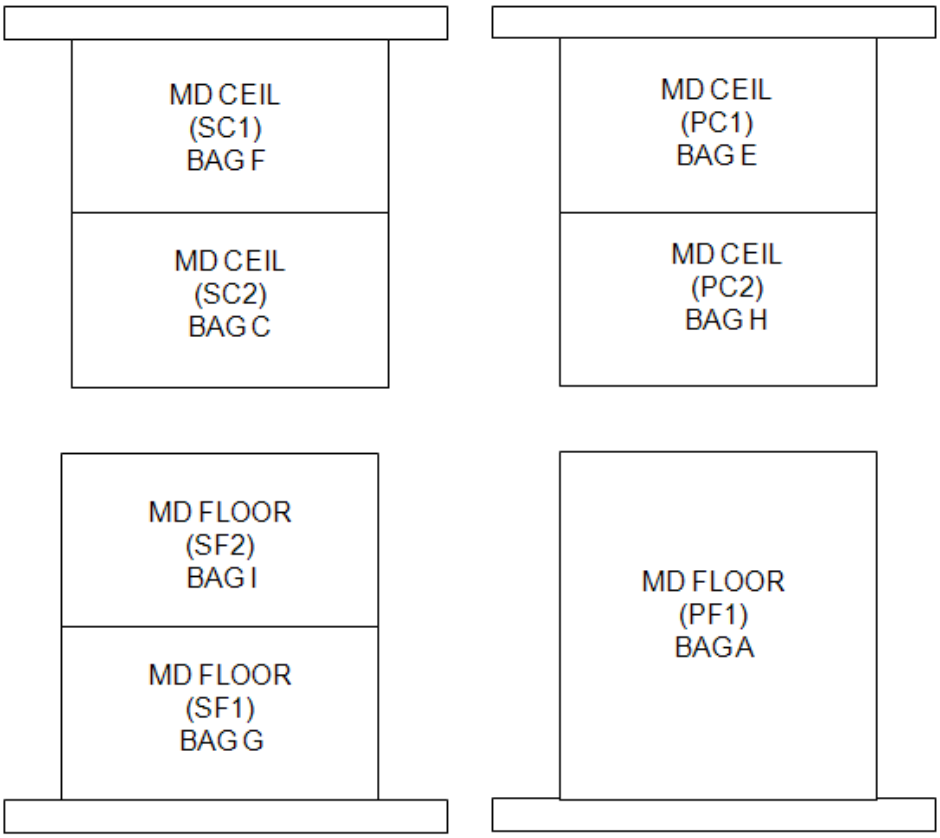

VIEW: DITCH LOOKING AFT

The ditch bags should be configured as shown above.

- Bag D will return in the A/L.
- Empty 5-MLE Bag that was strapped to the A/L floor bag for launch can be stowed in the middeck behind the Cargo Retention Net. Empty food trays can be stowed in this bag if additional locker volume is needed.
- Reminder please stow the Shuttle logbooks and Actiwatches in MF57K (to simplify runway destow operations) .

END OF PAGE 1 OF 7, MSG 106

MSG 106 - RETURN LOCKER LAYOUTS

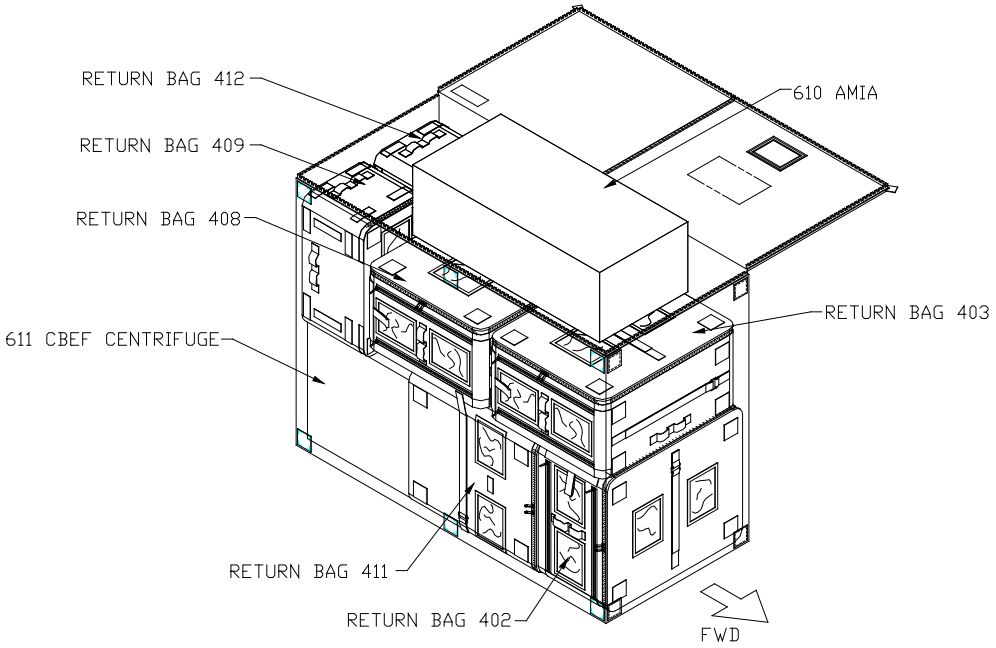

Bag A (PF1):

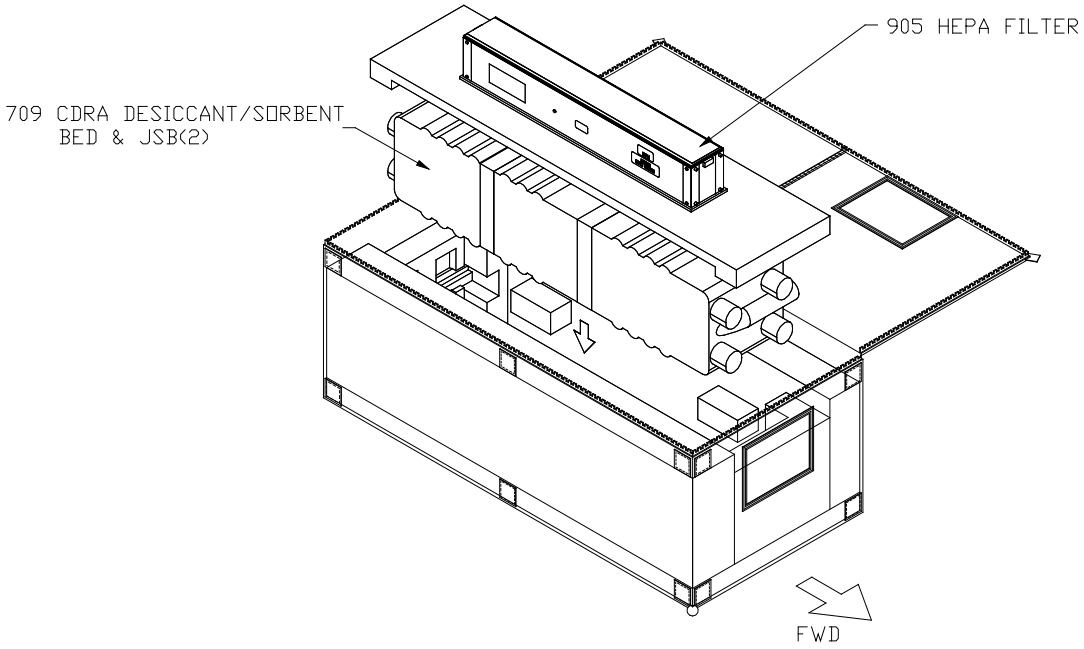

Bag C (SC2): The HEPA Filter (return item #905) may cause some bulging in the bag, which is no concern for return.

END OF PAGE 2 OF 7, MSG 106

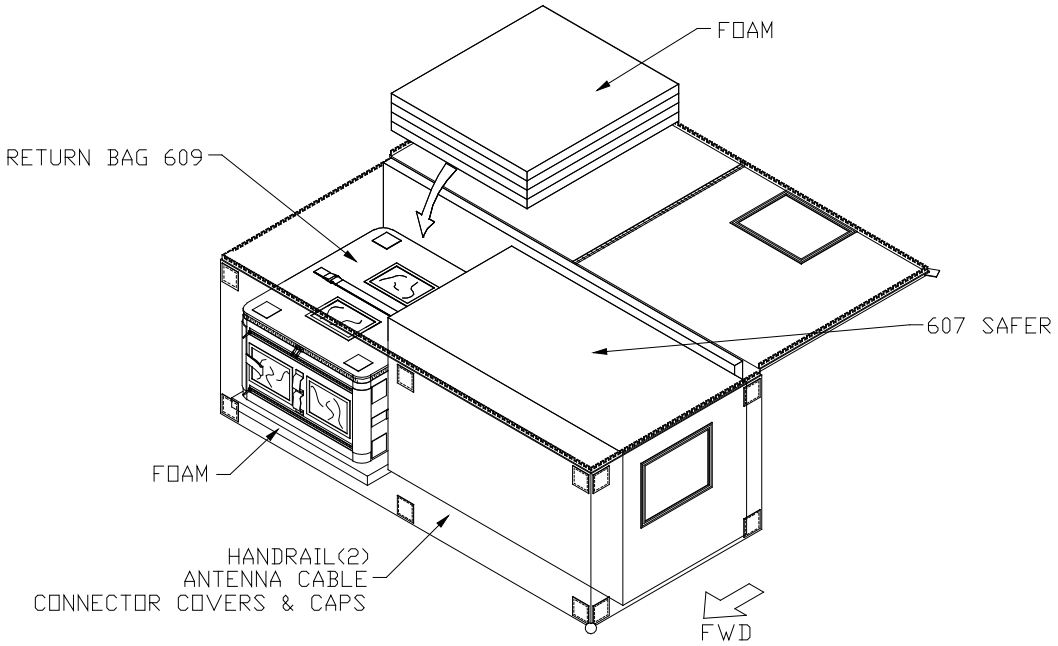

Bag D: Bag will return in the A/L. Place a piece of foam under Return Bag 609.

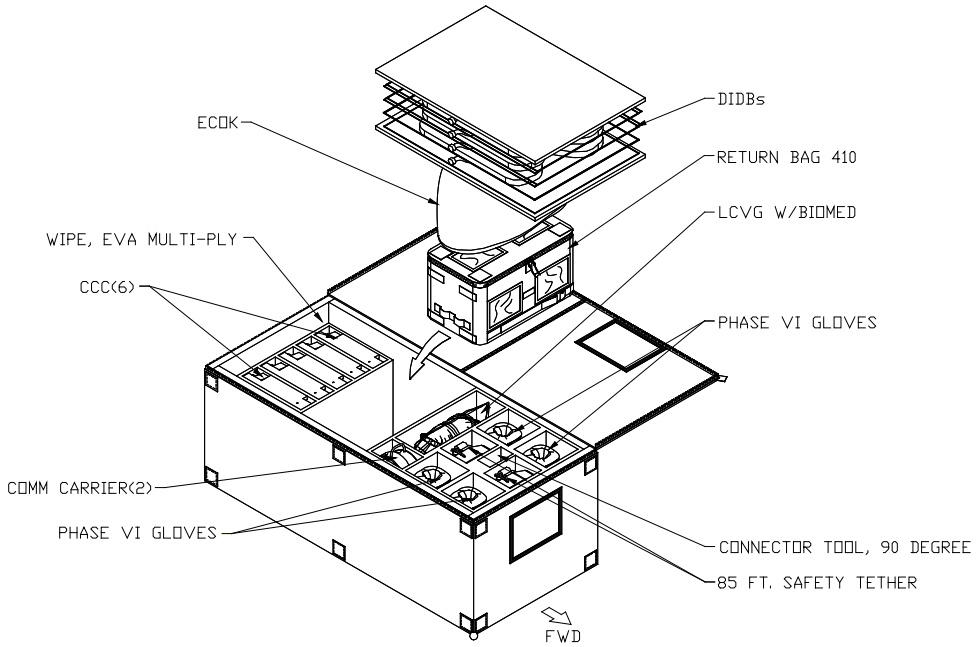

Bag E (PC1)

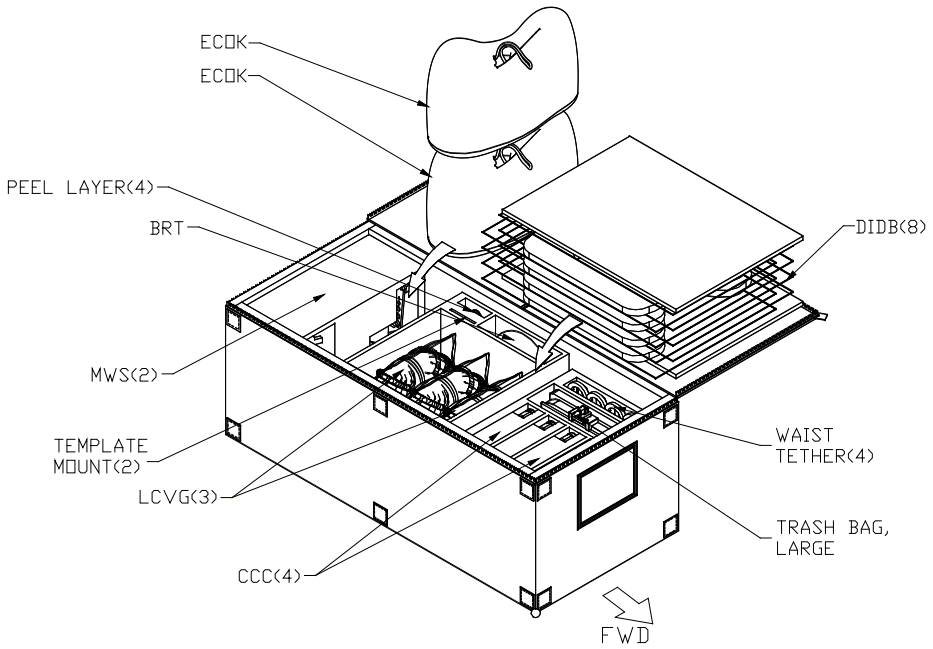

Bag F (SC1): Same configuration as launch.

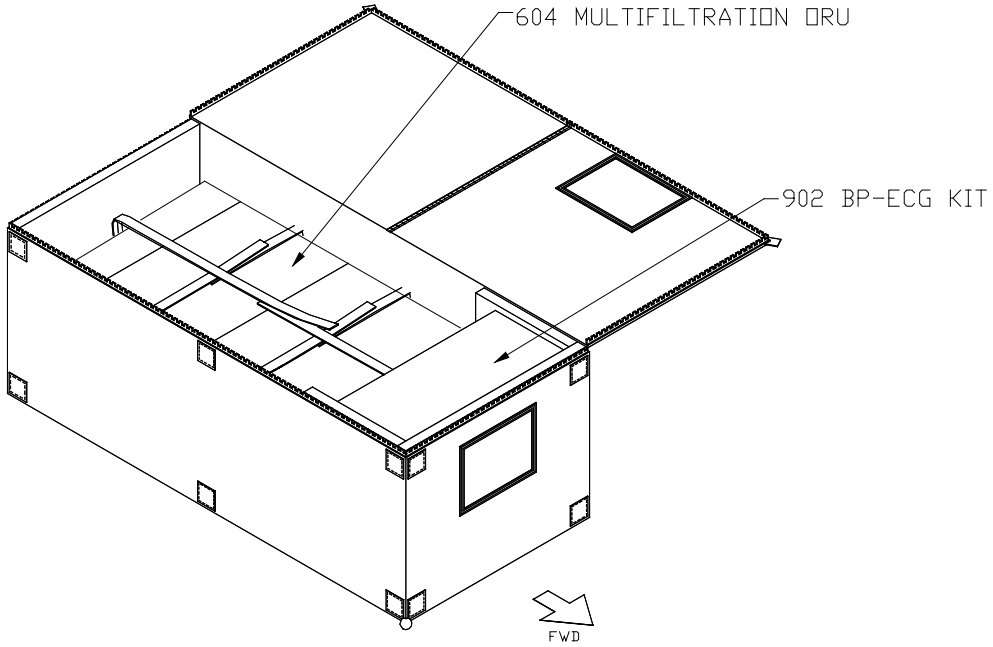

Bag G (SF1): Foam can be added to the top of item 604 to fill up bag.

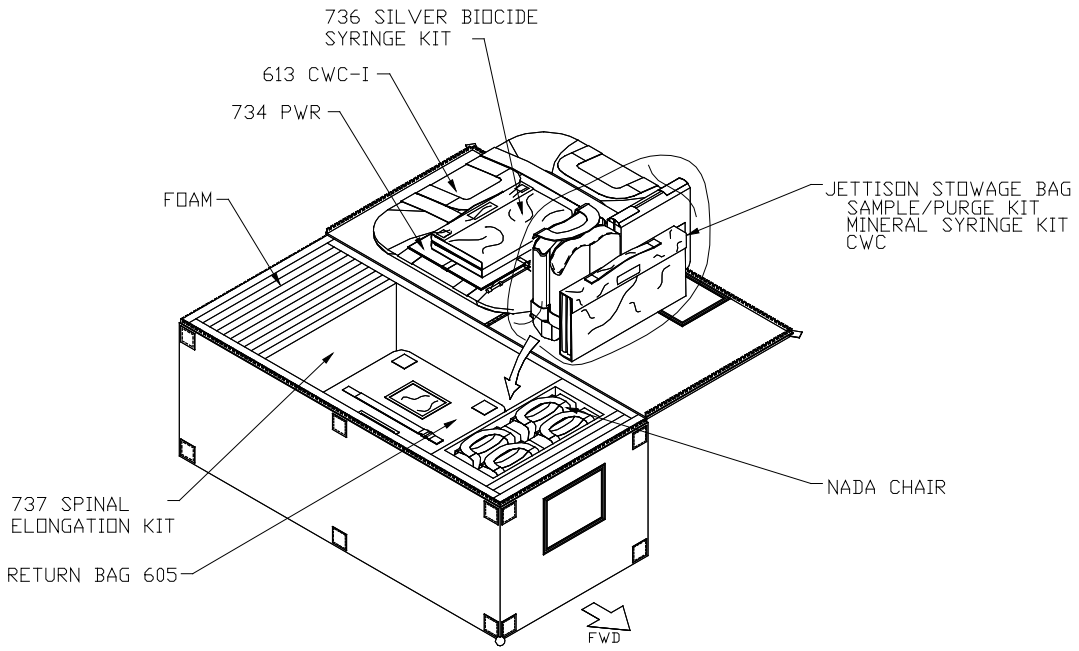

Bag H (PC2): Additional hardware may be added to this bag later in the mission. If so, hardware can go in place of the foam. Foam can be relocated to another bag if necessary.

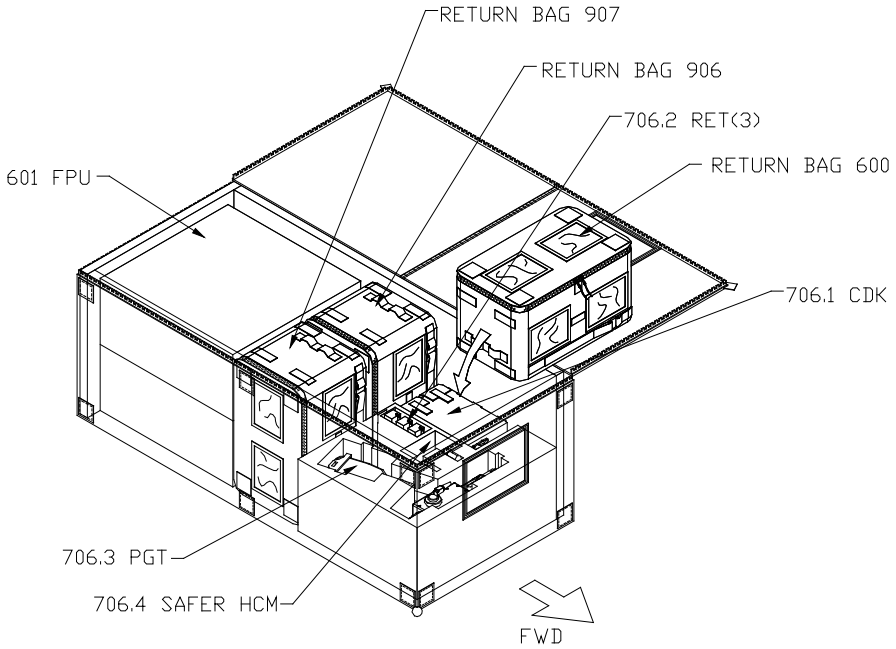

Bag I (SF2):

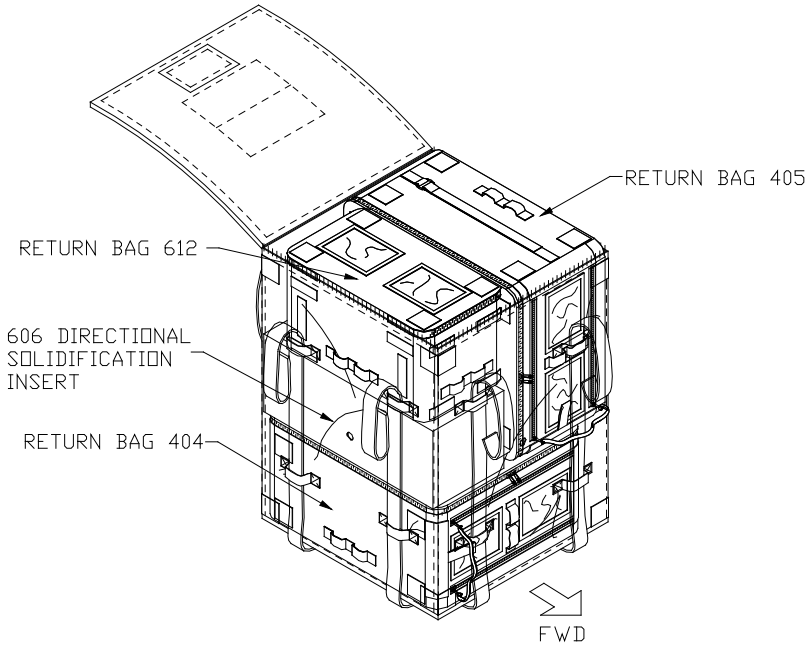

S7 Bag: Item 606 (Directional Solidification Insert) will be enclosed in bubble wrap.

MODULAR LOCKER LAYOUT DESCENT

LW MAR
SJD32108929–383

CDR	MARK KELLY
PLT	GREG JOHNSON
M/S #1	MIKE FINCKE
M/S #2	ROBERTO VITTORI
M/S #3	ANDREW FEUSTEL
M/S #4	GREG CHAMITOFF

LEADER:	KEITH CAMPBELL
DATE:	05–24–11
LAUNCH:	05–16–11
FLIGHT:	STS–134/ULF6
VEHICLE:	OV–105
CREW:	6 MAN 16 + 0 + 2 DAYS
RQMTS:	TEPC, ERGOMETER, GALLEY, SLEEPING BAGS

MIDDECK FORWARD

- PANTRY FOOD (SNACKS) 1622 –308
- MF57A 1622 –308 PANTRY FOOD (UTENSILS)
- PANTRY FOOD (BEVERAGES) 1622 –302
- MF43C 1801 –302 TRAD
- MF57C 7211 –303 ISS PHOTO/TV KIT (CTB 406)
- MF71C 2158 –302 608–A31P LAPTOP 710/711–CSA–CP(4) 727 1/2–HARD DRIVE 732–STOW BAG 904–IAF FLAGS 905–CSAS 908/909–TAPES (CTB)
- MF14E 2760 –322 401–WATER SAMPLES DRAGER TUBE / 733–URINE BAGS
- MF28E/G 7493 –305 724–GLACIER
- MF43E 0631 –323 SOMS RESUS AMMONIA DETEC KIT EMU BATTERY/CWWDF RET(8)/AET(6)
- MF57E 2007 –301 M/S #2 CLOTHING (CTB)
- MF71E 1165 –301 5971 –311 CGBA
- MF14G 2761 –308 FRESH FOOD / MENU FOOD
- MF43G 2006 –301 M/S #1 CLOTHING (CTB)
- MF57G 2022 –301 714–DOUBLE COLDBAG S/N 1009
- MF71G 6240 –311 ORBITER FDF SODF
- MF14H 2763 –304 MENU FOOD / MENU FOOD
- MF28H 6684 –341 MED KITS ALTIMETER
- MF43H 0305 –313 POST INSERTION #1
- MF57H 2010 –303 BIOKIS(2) IFOAM NIGHT VISION MAK/EUCPD(3)
- MF71H 5473 –305 ORBITER FDF
- MF14K 2764 –306 MENU FOOD / MENU FOOD
- MF28K 2022 –301 715–DOUBLE COLDBAG S/N 1014
- MF43K 2011 –303 BIOWORM LWR ARM(2) (HCTB 407) | POST INSERTION #2 (0306–321)
- MF57K 2000 –304 ACTIWATCH/LOGBOOK CUBE LAB 7&8 IENOSE/IAPE CGBA MUFFLER
- MF71K 2022 –302 713–DOUBLE COLDBAG S/N 1013
- MF14M 2765 –304 MENU FOOD / MENU FOOD
- MF28M 2762 –310 2021 –303 725–BLOOD SLEEVE 726–SALIVA POUCH 735–RSP / MENU FOOD
- MF43M 2004 –301 CDR CLOTHING (CTB)
- MF57M 8965 –338 YELLOW HOSE CONDENSATE CWC(2) ORINGS/BRAYCOTE DOCK MECH KIT SUPA(15)/CSA–CP
- MF71M 2009 –301 M/S #4 CLOTHING (CTB)
- MCU STOW1 PD
- MF14O 2766 –305 MENU FOOD / MENU FOOD
- MF28O 2769 –309 MENU FOOD / MENU FOOD
- MF43O 5452 –333 IFM BREAKOUT BOX TURNBUCKLES AIR SAMPLERS WWD FILTER/RMS KIT FOAM APPLICATORS
- MF57O 6299 –333 COAS/DS3 LIGHT SHADES AUDIO DOSIMETER 738–WORK LIGHT(2) BTA
- MF71O 6697 –341 HH LIDAR W/NIGHTSCOPE 2ND HHL (TRAD)/SSV/BPSMU

MIDDECK AFT

- MA9D/F 2003 –309 STS7–STORRM STORRM ACCESSORIES STS8–AMS AMS ACCESSORIES PGSC DESK/BRKT TONOPEN KIT KAGOSHIMA KIT SUPA(1)
- MA16D 6250 –358 6300 –350 IFM TOOLS 2163–302 2161–305 2162–307 / 731–MULTIMETER
- MA16F 2008 –301 M/S #3 CLOTHING (CTB)
- MA9G 8737 –311 RCC COLD BAG ASSY
- MA16G 8047 –304 DC VAC (CTB 6015–326)
- MA9J 8719 –309 COLOR PRINTER & PAPER (CTB 6066–334)
- MA16J 8723 –302 PHOTO/TV STOW&GO (CTB)
- MA9L 6269 –316 5962 –303 PRINTER TRAYS / GIRA 6256–312
- MA16L 2005 –301 PLT CLOTHING (CTB)
- MA9N 7432–348 SOFT STWG BAGS PHK'S(6) 4980–315 CCK/MEAL TRAYS 8071–330 ZIPLOCKS/COMM PHK RSTRNTS/FLUID LD 8070–304 FIBERSCOPE/LT STK
- MA16N 1908 –309 CREW SUPPORT

MD CEIL (PORT 1) 2001 –308
85' SAFETY TETH(2) LCVG/ECOK–CF/CCC(6) COMM CARRIER(2)–CF GLOVES(4PR)/DIDB(8) 90 DEGREE CONN TOOL HCTB 410 EVA WIPES

MD CEIL (PORT 2) 2013 –306
CTB 605–H20 SEP JSB: MIN SYRINGE KIT SAMPLE/PURGE KIT CWC/ADAPTER NADA CHAIR(4) 712–CWC–I 734–PWR 736–SILVER BIO KIT(2) 737–SPINAL KIT

MD CEIL (STBD 1) 2012 –304
CCC(4)–CONTINGENCY ECOK(2)–CONTINGENCY LCVG(3)–CONTINGENCY BRT/TRASH BAG/MWS WAIST TETHER(4) DIDB(8)

MD CEIL (STBD 2) 0245 –315
709–CDRA 905–HEPA FILTER

MD FLOOR (PORT 1) 2028 –302
CTB 402 CTB 403 CTB 408 HCTB 409 DCTB 411 HCTB 412 610–AMIA 611–CBEF

MD FLOOR (STBD 2) 2017 –308
HCTB 600 601–FLUID PUMP UNIT 706.1–CDK 706.2–RET(3) 706.3–PST 706.4–SAFER HC MOUNT HCTB 906 HCTB 907

MD FLOOR (STBD 1) 2020 –305
604–MULTIFILTRN BED 902–BP/ECG

ML60B 6013 –310
PRIME C/L CAM GFE TV CONTROL

ML60E 2034 –303
STS1=OCA STS2=WINDECOM STS3=KFX STS4=RPOP STS5=RPOP2 STS6=WLES PGSC ACCESS ACCESS PT 903–T61P PCS ACCESS.

ML60M 6014 –312
B/U C/L CAM ULTRA SONIC LEAK DETECTOR

VOL B (MA4D/J) 7436 –329
DRY TRASH

VOL 3B (MA75J) 7425 –332
QUICK DON MASK(2) OCAC SPOTLT/D2XS CAM T2–24MM G1 CMCDR 400MM LENS

A16 7490 –313
PGSC DESK(3) CORE CAMR BAG 708–10.5MM LENS PILOT HC BRACKETS(3)

A17 7424 –304
CORE CC BAG DTV CAMERA BAG QUICK DON MASK(4) HATCH TOOL

VOLUME D (MD52C) 7498 –304
RCC REPAIR HDWR B/U DTV HDWR

VOLUME F (MD76M) 1403 –306
WET TRASH

VOLUME G (MD80R) 1800 –352
CONT UCDs WASTE MGMT CWC(2)

VOLUME H (MD23R) 8068 –333
723–EMU SERVICE KIT (INBD)
EVA ACCESS (OBD) 8065 –320

WMC (MA82H) 4575 –322 0914 –332
TOWELS AND RESUPPLY ITEMS WMC DISPENSER
1st DAY CLOTH SUPA(1) 1641–332

EXT AIRLOCK
7404 –323 (STBD) 2–EMUs 7403 –327 (PORT)
EXT A/L FLOOR 2014 –306
607–SAFER CTB 609 EVA CAPS/HANDRAIL

31 LIOH: 29 + 1 ATCO IN LIOH BOX, 2 INSTLD
G–SUITS(6) (7435–338)

WINDOW SHADE BAG: (5548–392)
IFM CABLES & HOSES (4259–347)
MONITOR SHIELDS/OCA CABLE

707–S7 BAG (2032–303)
CTB 404 CTB 405 606–DSI HCTB 612

L10A1: AVIU/MPC (6686–345)
L10A2: DTV MUX
L10A3: DTV VTR/VIP
L11: PDIP 2 OIU 1/2
L12A1: SSP 1
L12A2: SSP 2
L12A3: PDIP 1
R12A1: VPU
R12A2: OBSS/OPP

✱ NOT APPROVED
● LATE LOAD
⊠ SWAP
⊗ TRANSFER TO ISS
CTB–CARGO TRANSFER BAG
HCTB–HALF CARGO TRANSFER BAG

CTB	HALF	SGL	DBL	TRPL
LAUNCH	2	17	0	0
RETURN	8	18	1	0

C/D JSC 1929
P/D JSC 1927
C/D KSC 1930
P/D KSC 1928
CEIT KIT 1913
MDK LBL TBD
DWG NO. SGD32104457
/USR/DWGS/LOCKER/STS134
CCMM: M. MCDONALD 483–1384

NOTE: LOCKER LAYOUTS ARE FOR REFERENCE ONLY AND ARE NOT RELEASED DRAWINGS.
FOR RELEASED DRAWINGS, REFER TO CCCD DRAWING # SGD32104457

END OF PAGE 7 OF 7, MSG 106

Increment 28: JLP CWC-I Relocation

Goal: To relocate CWC-Is packed in CTBs from JLP to PMM standoffs. Some CWC-Is that are not currently packed in CTBs will remain on the rack fronts in JLP until another activity.

Duration: 5 hours, but can be done in parts

Procedure:

1. Relocate items per Table A.
    a. The PF1, PA1 and PA2 standoffs have been completed, but 5 empty standoffs remain. See photos below Table A for how to orientate the CTBs in the standoffs.

    b. It may be necessary to remove a couple CWC-Is from the 3.0 CTBs to manipulate the CTBs into the standoff area due to the airduct. If possible replace the CWC-Is inside the CTB. If not possible, please try to stow the CWC-Is within the standoff outside the 3.0 CTBs.

    c. If there are CWC-Is that cannot be accommodated in the standoff, **RESTOW** at the **PMM1F1 rack front** and **REPORT** the S/Ns.

    NOTE: There have been a few leaks recently. In order to mitigate pressure on the fittings and seals, please handle the CWC-Is and CTBs containing CWC-Is with care.

    d. Report your results to MCC-H and we will update IMS for you.

Notes on accessing the standoffs:
1) To access the PF4 standoff, remove enough stowage in F3 to access the PF3 standoff. Access the PF4 standoff through the PF3 standoff.
2) To access the PF3 standoff, go through the F3 rack bay.
3) To access the PF2 standoff, either go through the PF3 standoff, or rotate the F2 RSP.
4) To access the PF1 standoff, rotate the F1 RSP.
5) To access the PA4 standoff, go through the A4 rack bay.
6) To access the PA3 standoff, go through the P3 rack bay.
7) To access the PA2 standoff, either go through the PA3 standoff, or rotate the A2 RSP.
8) To access the PA1 standoff, go through the A1 rack bay.

Table A: CTBs with CWC-Is

✓	Ref #	Current Location	Item	S/N	B/C	Qty	New Location	Notes
x	1	**LOST**	2.0 CTB	1066	004200J	1	**PMM1PA1 Standoff**	Please confirm the S/Ns of the CWC-Is in this CTB. IMS shows this as empty after the inventory from the last activity, but we think there are up to 4 CWC-Is in this CTB.
✓	2	**JLP1F2 Rack Front**	2.0 CTB	1070 1100	004204J 010688J	2		
✓	3	**JLP1F2 Rack Front**	3.0 CTB	1116	006773J	1	**PMM1PA2 Standoff**	
✓	4	**JLP1S1 Behind HDP**	3.0 CTB	1089	006746J	1		CWC-I S/N 2054 and 2043 were removed and temp stowed on PMM1F1 rack front.
	5	**PMM1F4 Rack Front**	3.0 CTB	1121	006778J	1	**PMM1PA3 Standoff**	
	6	**JLP1S1 Behind HDP**	3.0 CTB	1107	006764J	1		
	7	**JLP1F2 Behind HDP**	3.0 CTB	1091 1118	006748J 006775J	2	**PMM1PA4 Standoff**	
	8	**JLP1F2 Behind HDP**	3.0 CTB	1034 1043	004219J 004228J	2	**PMM1PF2 Standoff**	
	9	**JLP1F2 Behind HDP**	3.0 CTB	1048 1085	004233J 006742J	2	**PMM1PF3 Standoff**	
	10	**PMM1F4 Rack Front**	3.0 CTB	1073	004258J	1	**PMM1PF4 Standoff**	Only contains 4 CWC-Is.
	11	**JLP1S1 Behind HDP**	2.0 CTB	1098 1111	010686J 010699J	2	**PMM1PF4 Standoff**	

Photo 1 – 3.0 CTB on end in the standoff (photo from Bldg 9 – note no airduct)

Photo 2 – Two 3.0 CTBs stowed in a standoff (photo from Bldg 9 – note no airduct)

Photo 3 – On-orbit photo from first completed standoff

ISS027E025402

ULF6 Flight Day 10 Stowage Notes

BSA-RCHRG-INIT (MS4,S-BD) - 145/13:46

#	Location	Item Name	P/N	S/N	B/C	Notes
Type: Standard						
1	**A/L1O1** M-02 Bag: EVA PREP AND OPS, S/N 1038, B/C 003019J	Ziplock: BSA REBA Cable				
2		REBA BSA CBLS	SEG33112214-301	1006	00008706J	
3	**EMU 3004** Aft EDDA	EHIP Battery Pack	SEG39130223-304	1022 1025	- -	
4		REBA	SEG33112213-302	1007	REBA1007J	Charging in suit
5	**EMU 3018** Fwd EDDA	REBA	SEG33112213-302	1009	REBA1009J	Charging in suit
Type: Restow						
6	**A/L1F1** Battery Stowage Assembly	EHIP Battery Pack	SEG39130223-304	1022 1025	- -	
7		REBA BSA CBLS	SEG33112214-301	1006	00008706J	

Get- Ahead : ELC3 CTC MLI Tuck Task Data Pack

37

STS134/ULF6

EVA 3

Issue: CTC – MLI Flap Open on Orbit

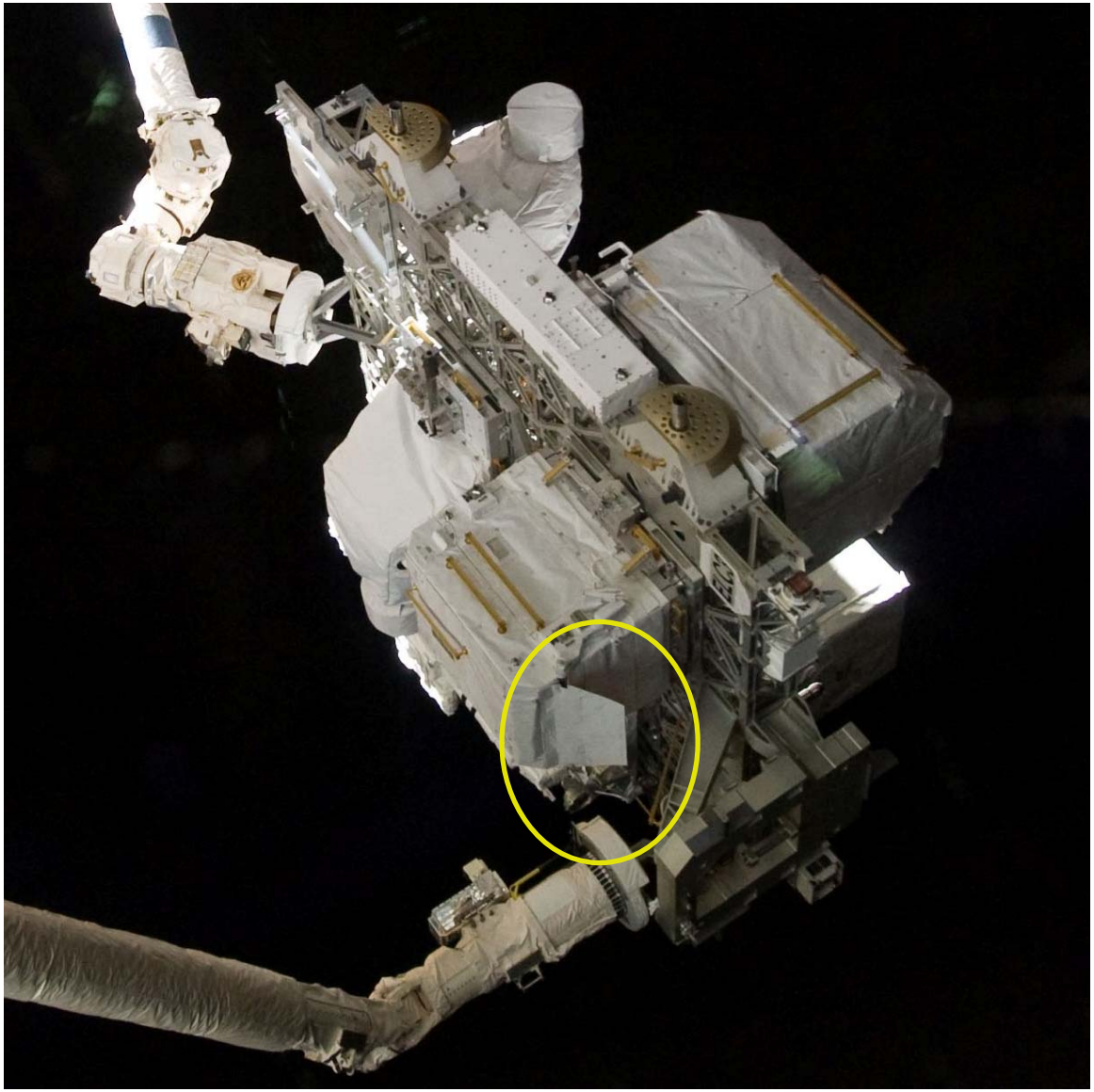

Tuck MLI under Belt

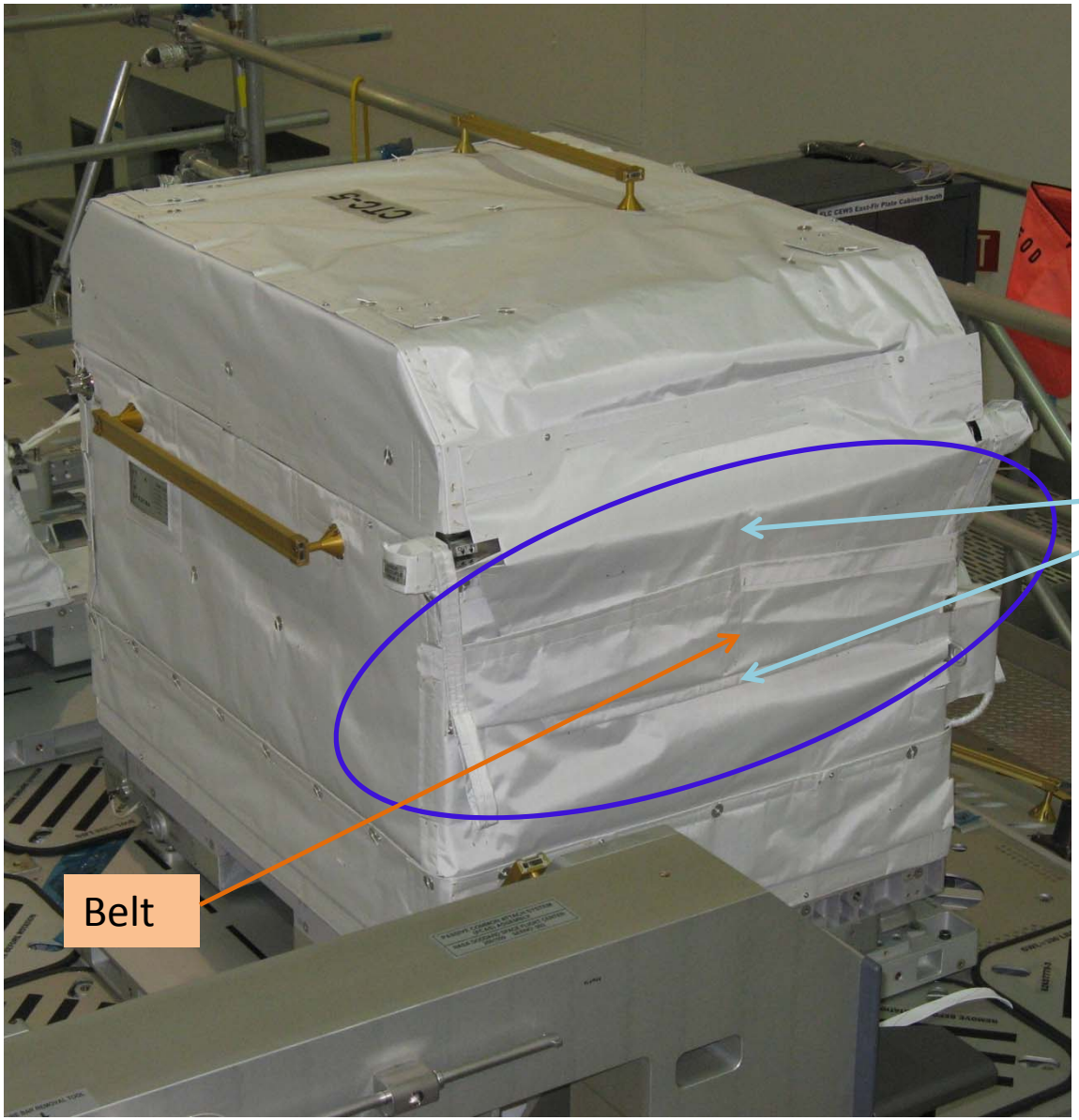

ELC3 CTC MLI Tuck Task

- Plan to perform this task as a get-ahead at the end of EVA3
  - Both EV's are in the vicinity:
    - EV1 taking IR images of STP-H3 (carrying the IR camera may make it difficult with tight access to the CTC flap. See page 9)
    - EV2 installing MLI on the HPGT FRGF
  - Expect task to take ~20 minutes
  - Another opportunity exists on EVA4 when SPDM EDF Release task takes place on ELC3.

ELC3 Overview

P3 Zenith, Inboard Side, Next to the Truss

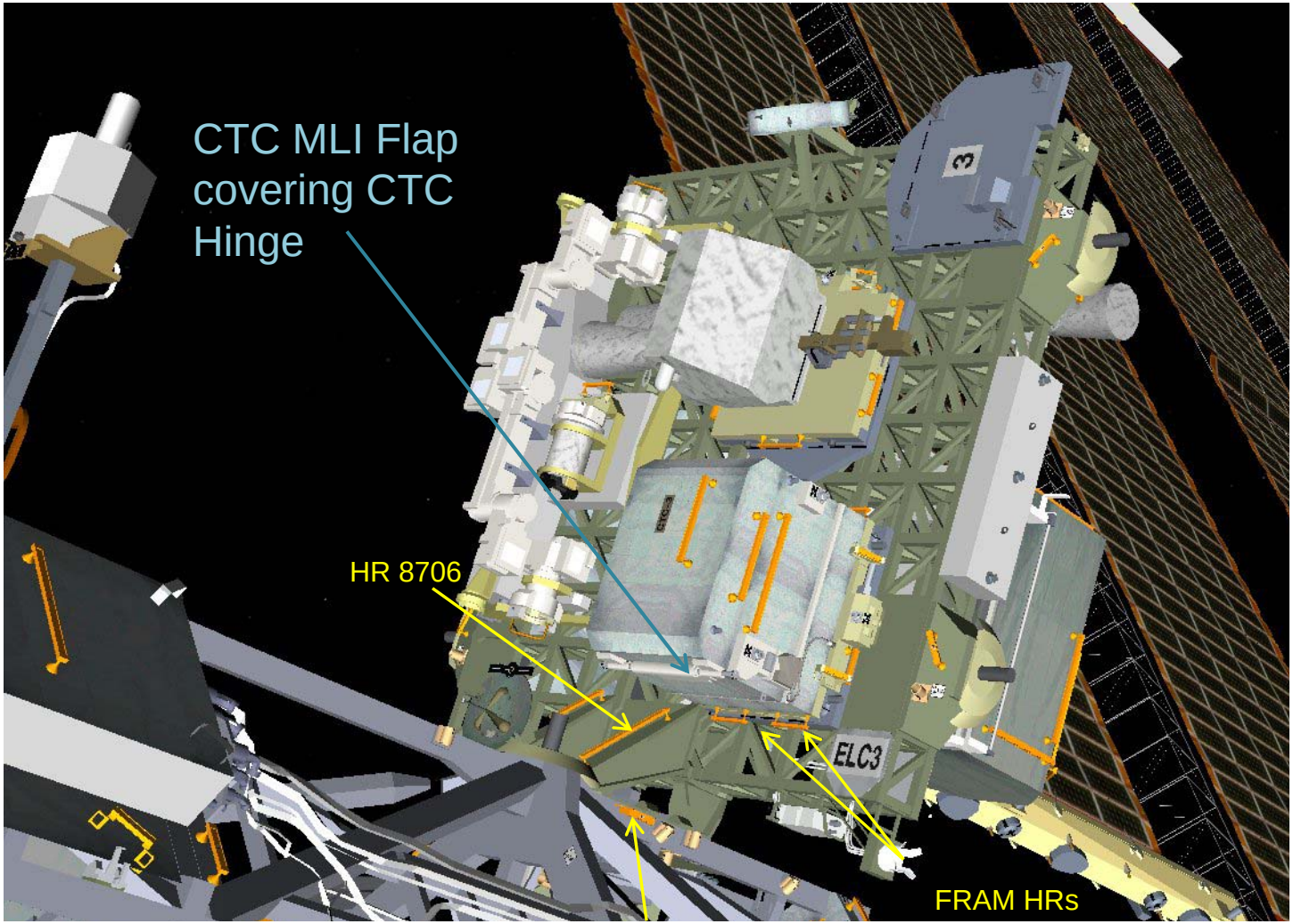

Note: Possible BRT Locations to aid with Tuck

FRAM Handrails if needed

Translation Path Options:

- Across ELC to forward side (across trunnion – may be hot)
- Going below the trunnion may not be possible due to ROEU protrusion
- Translate nadir to face 1, go inboard two bays, then translate zenith and outboard to the CTC

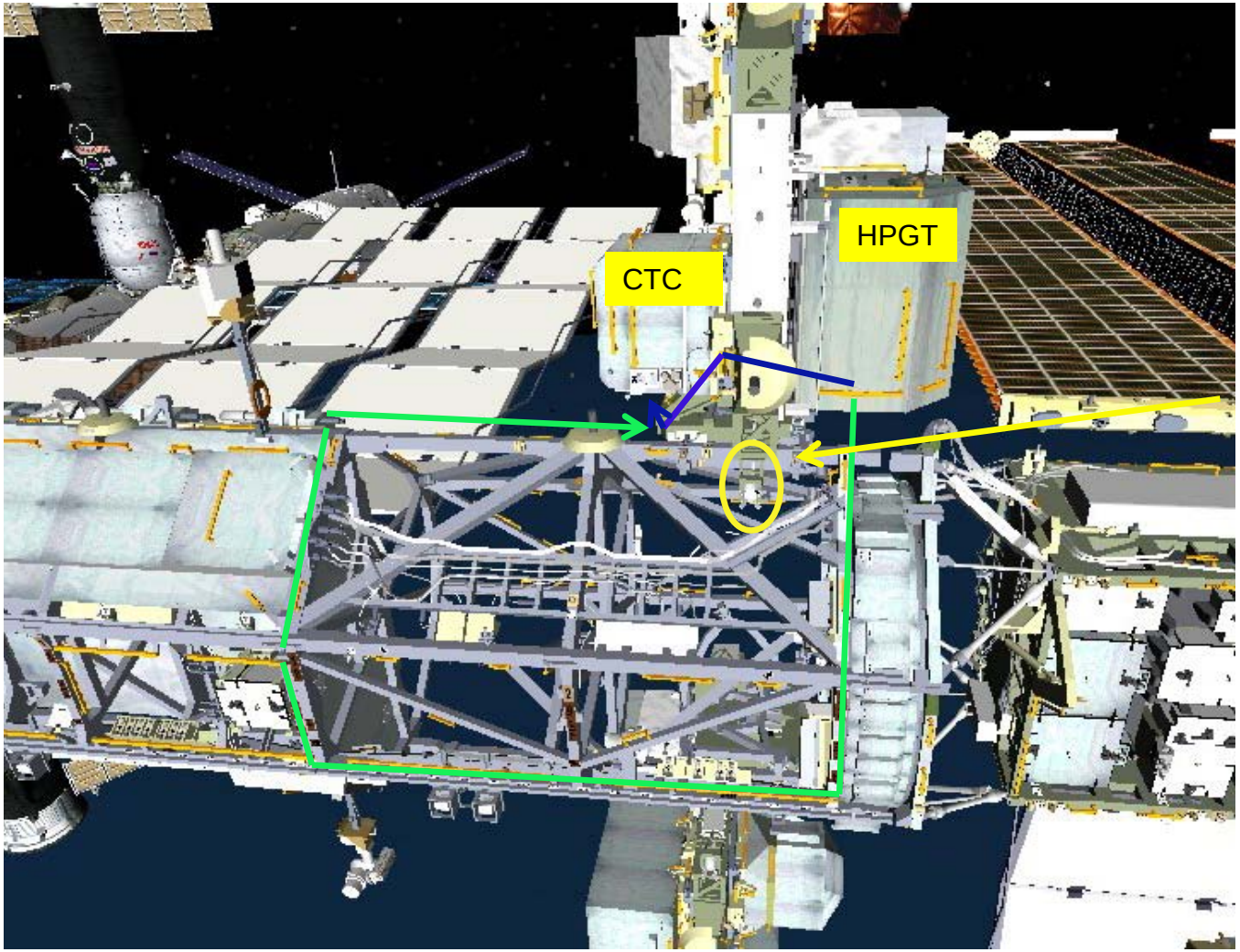

N/C/Ws

Notes

- All Handrails on CTC are certified for BRT loads
- All ELC and P3 handrails are certified for BRT loads
- CTC FRAM Handrails are certified for BRT loads

Cautions

- Worksite ELC3 Truss, just aft of CTC
  - Grapple Fixture (dry lube)
  - Robotic Target pin

Warnings

- Inboard, zenith on P3 Truss
  - P3 Trunnion Pin (could be hot)
- ELC3 - translation path
  - ELC3 Trunnion Pins (could be hot)
- CTC Hinge May Be Hot

NCWs

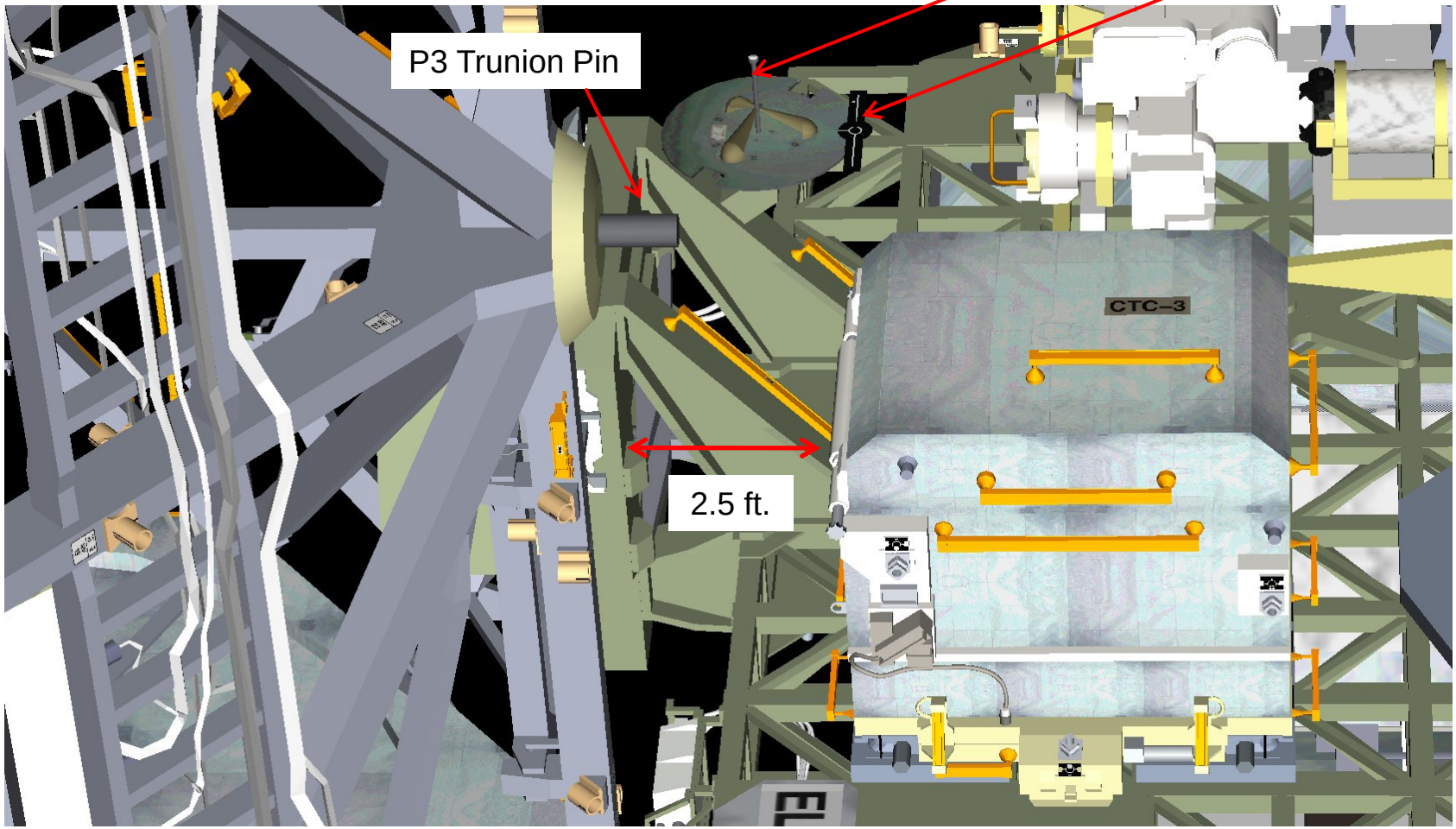

Close-out Photo of CTC

(Shows the flap properly tucked into the belt)

MSG 110 – FD9 Crew Choice Downlink Opportunities

Please allow 1-2 min to lock up on K-Band. Check with MCC before starting playback.

Post-Sleep Morning of FD10

TDRS	AOS	LOS	Delta (min)	Notes
E-TDS	8/11:29	8/11:46	17	
W-171	8/12:15	8/12:49	34	
E-TDS	8/12:59	8/13:26	27	
W-171	8/13:51	8/14:22	31	

Pre-Sleep Evening of FD10

TDRS	AOS	LOS	Delta (min)	Notes
W-171	9/01:14	9/01:29	15	Time overlaps with Post-EVA-Conf.
E-TDS	9/01:59	9/02:07	8	

END OF PAGE 1 OF 1, MSG 110