Innovative Partnership Program Final Report

Collapsible Dobson Space Telescope: Study to Determine the Feasibility of an Earth Observing Telescope Payload for a 6U Nanosatellite

Project Goals

Project aims to determine the feasibility of a 15-20 cm diameter, earth observing space telescope in a 10 kg 6U nanosatellite.

The effort includes:

- Definition and specification of telescope and camera optics
- Physical structure and deployment mechanism
- Critical path element is demonstration of telescope deployment mechanism

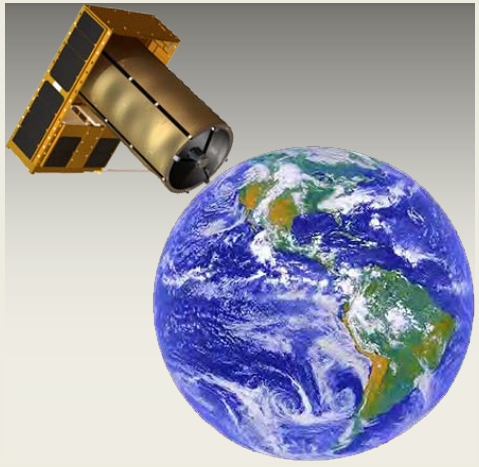

Simulated Field of View and Ground Resolution Capabilities of a Small Earth Observing Telescope

Field of view simulation at a 250Km orbit overlaid on a Google Earth image of Moffet Field CA.

- Black square shows ~ 7 km x 5 km FOV
- The red box is 300 x 300 pixels, simulating min ground distance of ~ 400 m x 400 m viewable w/o pixilation when zoomed to 1 inch on screen
- Simulation is conducted for a 154.2 mm *f*/8 telescope and a Canon EOS 5D Mark II imager:
    - Pixel Size 6.4 µm
    - Resolution 5616 by 3744 pixels

6U nanosatellite platform

The 6U shown here with open 4U bay for telescope payload, defines the volume constraints of the spacecraft's systems.

6U platform is chosen because, as a standard, emphasizes payloads and science missions by reducing time and resources spent developing the satellite.

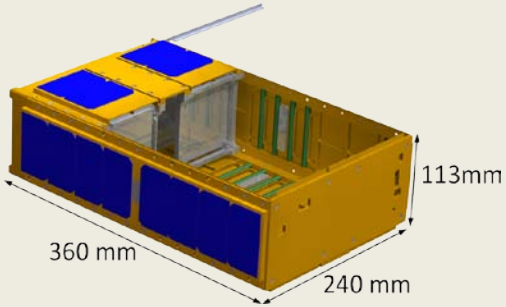

Innovative Partnership Program Final Report

Collapsible Dobson Space Telescope: Study to Determine the Feasibility of an Earth Observing Telescope Payload for a 6U Nanosatellite

Telescope Configuration Decision

Three generic telescope configurations considered: *Refracting, Newtonian, and Cassegrain*.

•Merits identified and weighed, each telescope is given score based on appropriateness for CDST

• The results of this analysis show that the Cassegrain configuration is best suited for use in the CDST.

System Weighted Decision Matrix

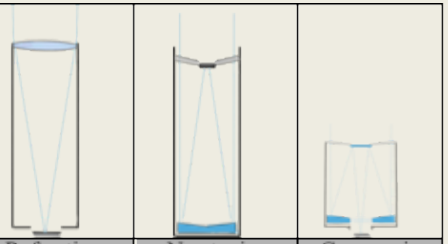

Figure of merit	Weight	Refracting	Newtonian	Cassegrain
Compressibility	0.3	0	0	1
Complexity	0.1	1	0	-1
Weight Distribution	0.2	-1	0	1
Image Performance	0.2	-1	1	1
Thermal Sensitivity	0.2	1	0	-1
Total	**1.0**	**-0.1**	**0.2**	**0.4**

Cassegrain Telescope Deployment Mechanism

Two telescope deployment methods prove promising for use in the CDST:

•*Strain Deployed Truss*

- •Allows Ritchey Chrétien telescope configuration
- •Ultimately chosen as the best approach for the CDST

•*Inflatable*

- •Requires a closed tube telescope, i.e. Schmidt type

Ritchey Chrétien (RC) Cassegrain; Strain Deployed Structure

Strain deployed structure designed to as the primary structure of a RC telescope.

•Estimate max stiffness of 48 kN•m^2

•Packing ratio of 6.76

•~37 mm for imaging sensor and alignment components

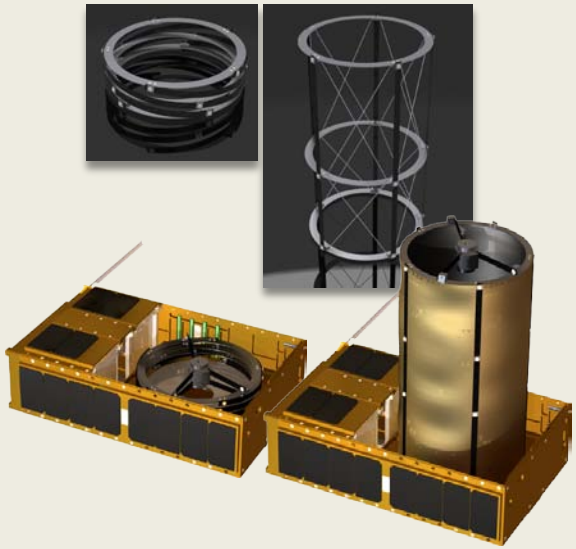

Schmidt Cassegrain; Inflatable Deployed Structure

Test conducted by NSBE Houston Space Chapter members on an inflatable unit to be considered for deployable structure.

•Prototype inflatable structure designed and built by L'Garde Inc.

•Estimated stiffness of 9 kN•m^2

•Packing ratio of 8.

Innovative Partnership Program Final Report

Collapsible Dobson Space Telescope: Study to Determine the Feasibility of an Earth Observing Telescope Payload for a 6U Nanosatellite

Collimation of Telescope

Misalignment of optics can occur due to:

- Deployment of the boom
- Thermal cycling of structure

Solution

- Piezo-electric tilt-tip and *Z* axis actuation of the secondary mirror

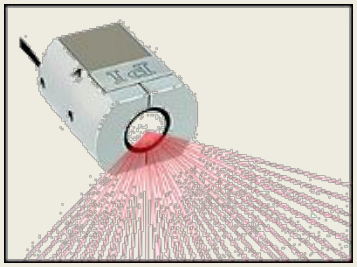

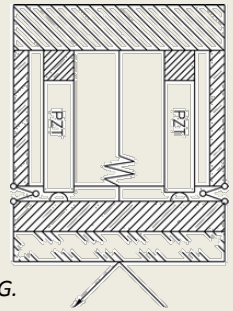

PI (Physik Instrumente) GmbH & Co. KG. www.physikinstrumente.com

Field Test of an Analog System

Field test of the telescope configuration conducted at NASA Ames during an astronomy outreach event for children.

- Canon camera connected to an OTS *f*/9 154.2 mm telescope
- Images are taken remotely using an iPad over a ADHOC network

Results

- Simulation conducted earlier are reasonable
- There is a great deal of interest for remote imaging of the earth

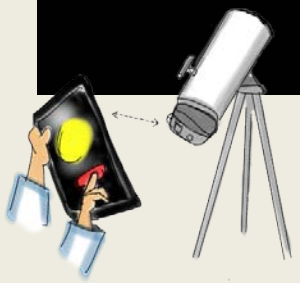

Processing

Three approaches to the payload processing subsystem are considered:

- Embedded Microcontroller (EMC)
- General Purpose Board Computer (SBC)
- Mobile Multimedia Processor (MMP)

MMP is shown to be most promising and a possible opportunity exists for leveraging work currently being conducted at NASA ARC.

Category	Weight	EMC	SBC	MMP
Compute Power/Memory	0.20	-1	1	1
Long-term storage capacity	0.15	-1	1	1
Data interface to camera	0.15	-1	1	1
Physical dimensions	0.10	1	0	1
Electrical power consumption	0.10	1	-1	0
Environmental tolerance	0.15	1	0	-1
Ease of software dev. and maintenance	0.15	0	1	1
Total	**1.00**	**-0.15**	**0.50**	**0.60**

Conclusions and Recommendations

In general, small deployable earth observing telescope is feasible

- Strain deployed structure shows high merit for use in the CDST
- Ritchey Chrétien optical configuration along with full frame imager is capable of compelling imagery

Follow-on work would include prototyping telescope to make performance comparison to OTS telescope. Interest has been expressed for a zero-G deployment test aboard the ISS, and image testing from WORF.