International Space Station Research Accommodations & Facilities

National Aeronautics and Space Administration

www.nasa.gov

Julie A. Robinson, Ph.D., ISS Program Scientist, 2 August 2010

Presentation Outline

- Overall Facts
- Internal Accommodations and Facilities
- External Accommodations and Facilities
- Transportation

Overview: International Space Station Facts

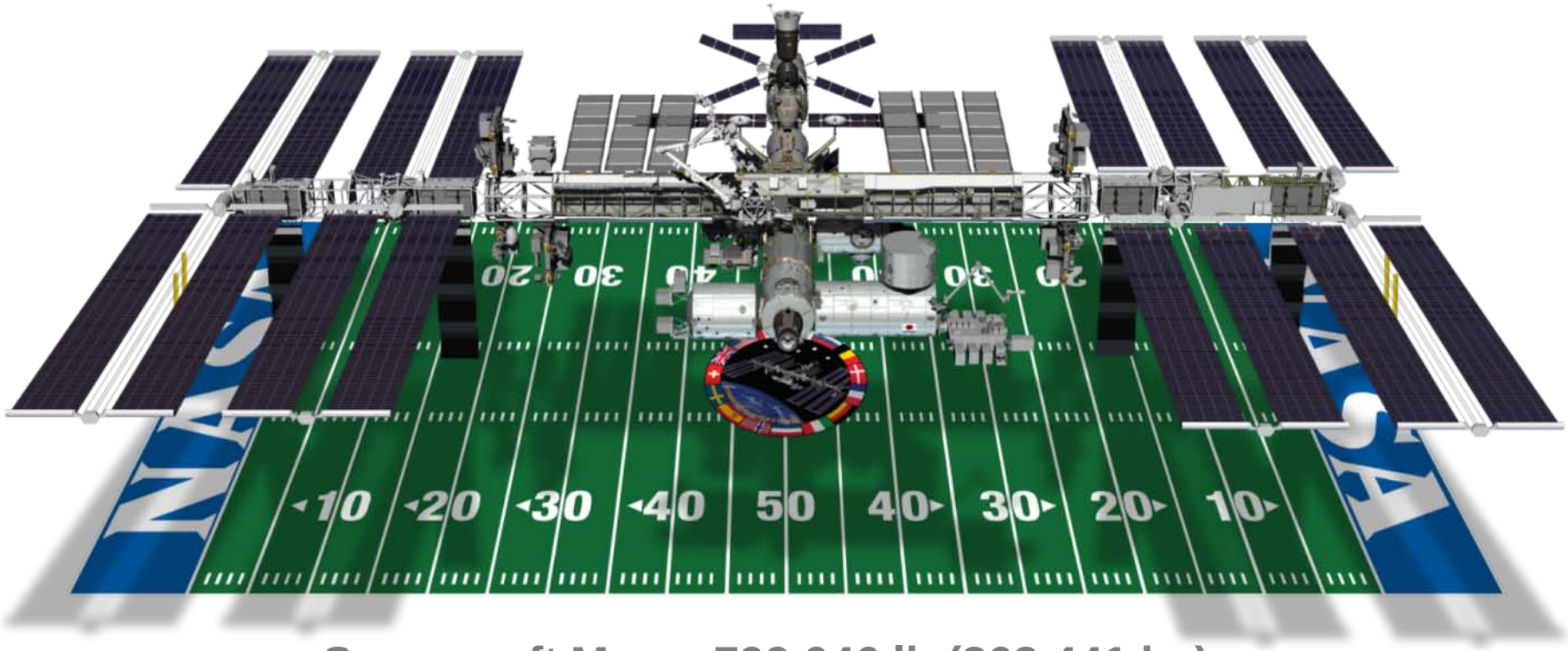

Spacecraft Mass: 799,046 lb (362,441 kg)
Velocity: 17,500 mph (28,200 kph)
Altitude: ~220 miles above Earth
Power: 80 kW continuous
Science Capability: Laboratories built by US, Europe, Japan, and Russia
Extended through *at least* 2020

2010 Complete Configuration

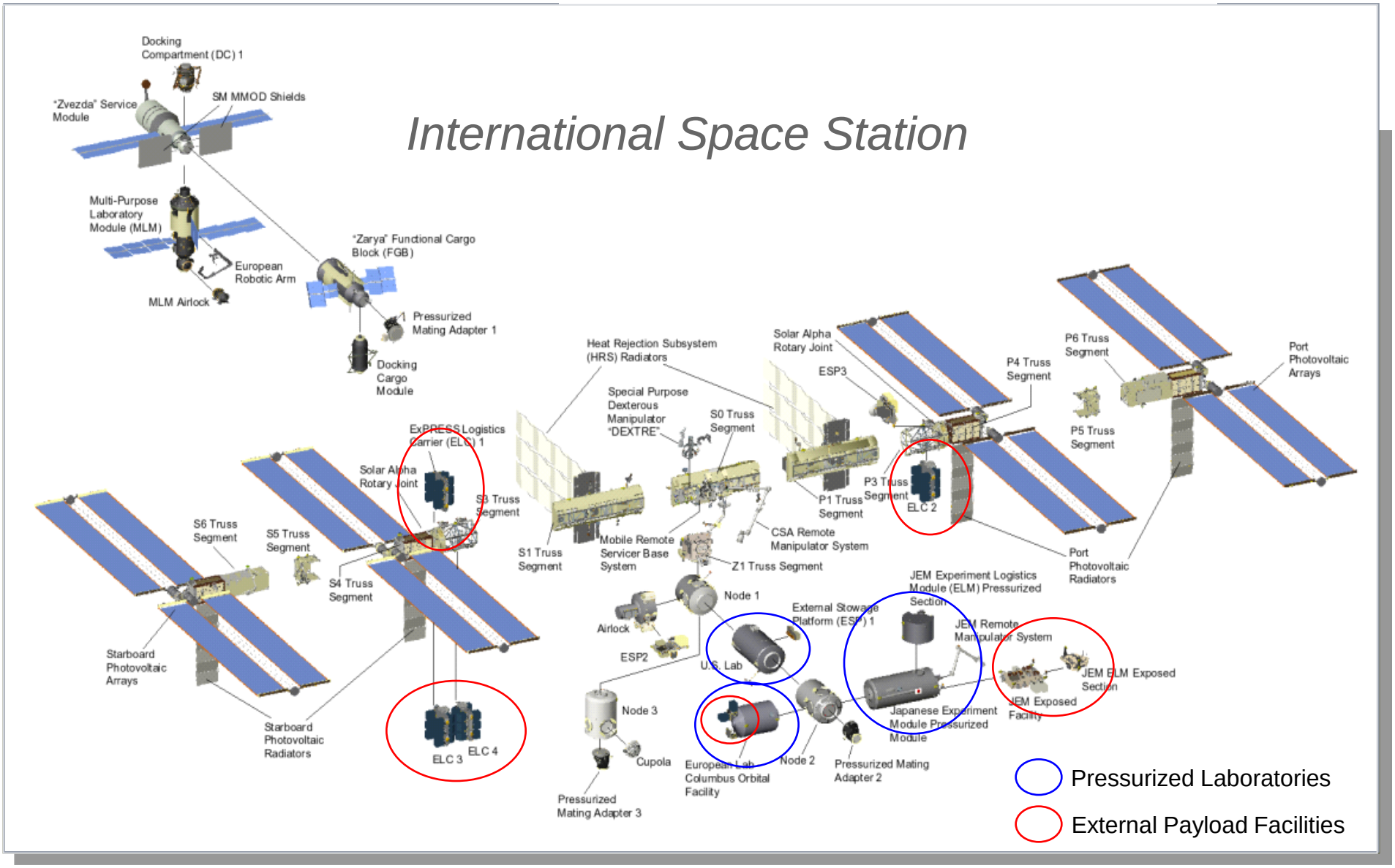

Microgravity Vibrational Environment (Internal)

- The ISS is equipped with an array of sensors that monitor perturbations to the microgravity state on-orbit.

- All data taken on March 27, STBD SARJ Rotating, exercise, 3 crew
  - This is a snapshot of 20 minutes and represents the average
  - Not the maximum environment

- SAMS Curves are shown with (blue) and without (green) Active Rack Isolation System attenuation

- SDMS shown without ARIS

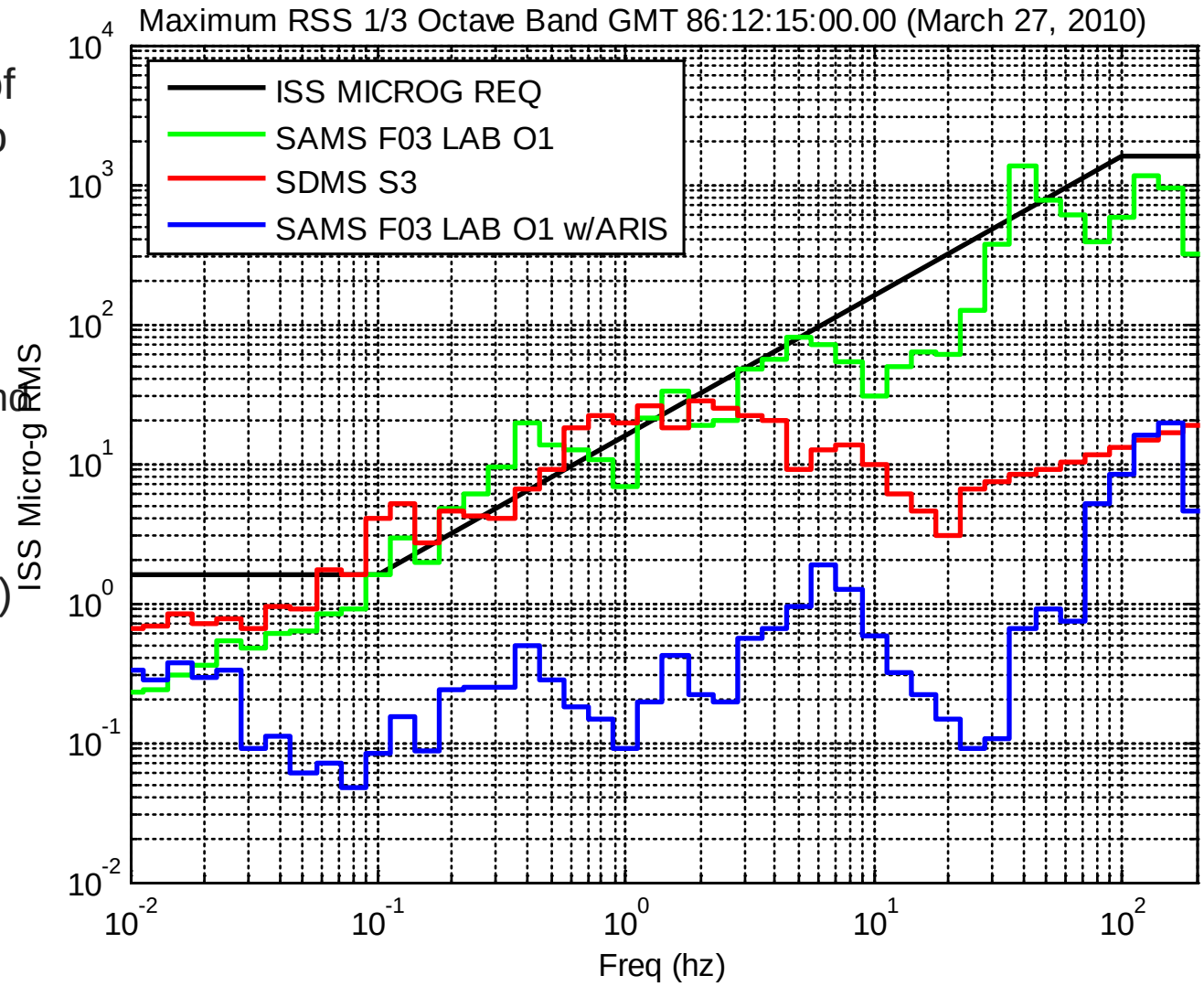

On-orbit Resources Provided to Payloads

Power	30kw average
Air to Ground Data	~37.5 Mbps of video (3 lines of video at 12.5 Mbps each)
	~8 Mbps of MRDL data (Science return)
	~5 Mbps for payload still imagery downlink
	~20 Mbps utilized for payload data recorded over LOS
Internal Racks	13 U.S. Lab
	5 ESA Lab
	6 JAXA Lab
External Sites	8 Truss ELC Platform Sites
	5 JAXA Platform Sites
	2 ESA Platform Sites
Crew time	35 hrs per week (average)

Upgrades In Work

Enhanced Processor and Integrated Communications (EPIC) Project	Phase A will upgrade the three Command and Control (C&C) MDMs and the two Guidance, Navigation, & Control (GN&C) MDMs.
	Phase B will upgrade the two Payload MDMs, and add Ethernet support for the C&C and Payload MDMs.
Air to Ground High Rate Communications System (HRCS) Project	Increase data rates internally and on the RF link (300 Mbps downlink, 7/25 Mbps uplink)
	Combine audio and video on orbit
	Provide two way, high quality audio
	Open the door to internet protocol communications
	Open the forward link to multiple users
	Allow for the capability of transmitting & recording HDTV
On Orbit External Wireless High Rate	100 Mbps 2-way Ethernet capability
	1 Mbps 1553 capability
	Up to 4 antennas attached to EVA handrails on US Lab

What internal space is available for research?

Science Rack Topology

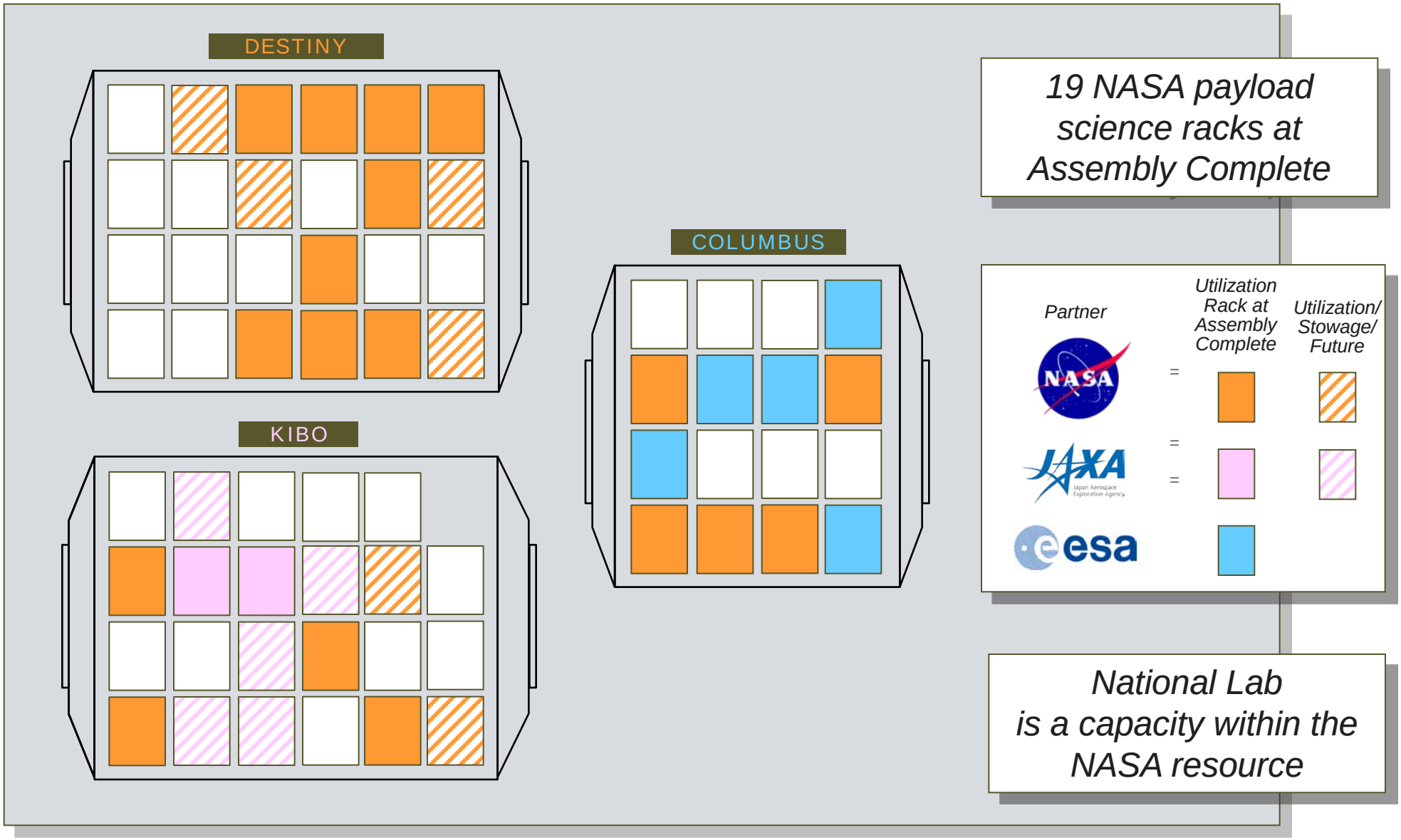

NASA Science Laboratory “Rack” Facilities

Human Research

7 ExPRESS Racks

ExPRESS-8
Launch 11/2010

Materials Science Research Rack

Window Observational Research Facility

Muscle Atrophy Research Exercise System (MARES)

Fluids Integrated Rack (FIR)

MELFI-3

3 Minus Eighty-Degree Laboratory Freezers for ISS (MELFI)

Microgravity Science Glovebox (MSG)

Combustion Integrated Rack(CIR)

More detailed information available at http://www.nasa.gov/iss-science/ Click on “Facilities Catalog”

Station to Internal Rack Resources

Power	3, 6, or 12 kW, 114.5 - 126 voltage, direct current (VDC)	
Data	Low Rate	MIL-STD-1553 bus 1 Mbps
	High Rate	100 Mbps
	Ethernet	10 Mbps
	Video	NTSC
Gases	Nitrogen	Flow= 0.1 kg/min minimum; 517-827 kPa, nominal; 1,379 kPa, maximum
	Argon, carbon dioxide, helium	517-768 kPa, nominal; 1,379 kPa, maximum
Cooling Loops	Moderate temperature	16.1 C – 18.3 C
	Flow rate	0 - 45.36 kg/h
	Low temperature	3.3 C – 5.6 C
	Flow rate	233 kg/h
Vacuum	Venting	10^{-3} torr in less than 2 h for single payload of 100 L
	Vacuum resource	10^{-3} torr

Multi-user EXPRESS Racks

- **7 Express Racks physical capacity**
  - **59 Lockers total, 25 have planned use, 34 available**
  - **13 Drawers total, 7 have planned use, 6 available**
- **At this time the NASA funded science program is projected to utilize only approximately 50% of the U.S. internal payload accommodations**
  - **The remaining 50% is available for National Lab investigations or an expanded number of NASA-supported investigations**

Expedition 3 crewmember Frank Culbertson conducting cell culture experiment in CBOSS in EXPRESS Rack 4

Expedition 14 crewmember Mike Lopez-Alegria conducting TROPI plant growth experiment in EMCS in EXPRESS Rack 3

European Space Agency Astronaut Thomas Reiter, Expedition 13 Flight Engineer, installing the EMCS facility into the EXPRESS Rack 3A.

ExPRESS Rack Accommodations

(Expedite the Processing of Experiments for Space Station)

Peggy Whitson works the Advanced Astroculture (ADVASC) plant growth chamber during Expedition 5 in July 2005

US Lab Module Layout with ISPRs

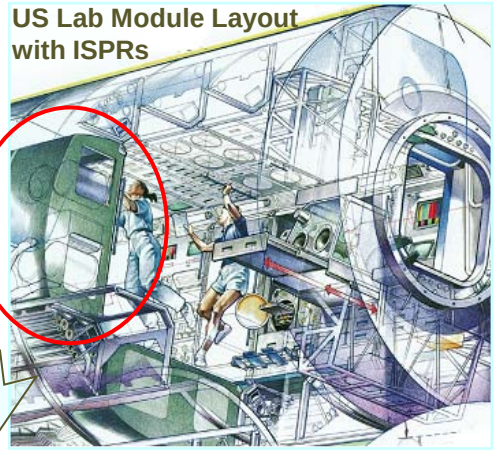

Middeck Locker

P/N V502-661604

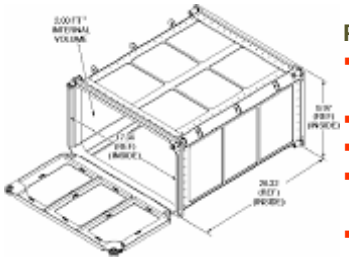

Features

- 4 rear captive fastener attachments
- Friction hinge
- Dual door locks
- Installation tool guides on 4 corners
- Weight – 12 lbs

EXPRESS 8/2 Configuration

International Standard Payload Rack

Secondary Structure & Subsystems

8/2 Payload Configuration (8 Middeck Lockers, 2 Powered ISIS Drawers)

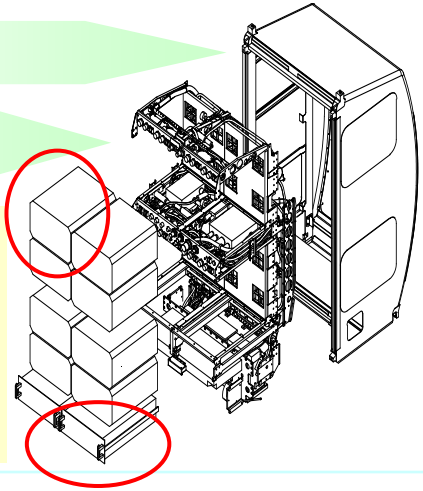

International Subrack Interface Standard Drawer

Powered P/N 683-43650

Stowage P/ N 683-43656

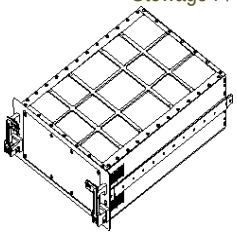

Features

- 4 PU (Panel Unit)
- Blind Connectors
- Locking Handles
- Weight – 27 lbs
- Rated to at least 37 lbs

ExPRESS Rack Resources

(Expedite the Processing of Experiments for Space Station)

System	Middeck Locker Locations	ISIS Drawer Locations	Rack-Level Accommodation
Structural	72 lbs. within cg constraints	64 lbs. within cg constraints	8 Mid deck Lockers 2 ISIS Drawers (4 Panel Unit)
Power	28 Vdc, 0 – 500 W	28 Vdc, 0 – 500 W	2000 Watts 28Vdc power
Air Cooling	≤ 200 Watts	<100 Watts	1200 Watts
Thermal Control System Water Cooling	500 Watts (2 positions per rack)	500 Watts (2 positions per rack)	2 positions per rack
Command and Data Handling	RS422 Analog Ethernet 5 Vdc Discrete	RS422 Analog Ethernet 5 Vdc Discrete	RS422 Analog Ethernet 5 Vdc Discrete
Video	NTSC/RS170A	NTSC/RS170A	NTSC/RS170A
Vacuum Exhaust System	1 payload interface per rack	1 payload interface per rack	1 payload interface per rack
Nitrogen	1 payload interface per rack	1 payload interface per rack	1 payload interface per rack

Gloveboxes

Freezers & Refrigerators

Cold Stowage Accommodations

	MELFI	MERLIN	GLACIER 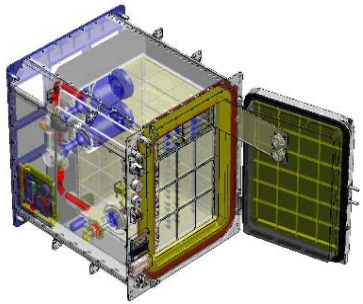	Single and Double Coldbag with ICEPAC's
First flight	2006	2007	2008	2006
On-orbit stowage	Yes	Possible	Possible	No
Transport	No	Yes	Yes	Yes
Power	Yes	Yes	Yes	No
On-orbit temperature (°C)	+4, -26, -80	+45 to -20	+4 to -185	N/A
Transport temperature (°C)	N/A	+45 to -5	+4 to -160	+4 to -32
Useable volume (L)	175	19	30	6.8/18.7
External volume	1 rack	1 MLE	2 MLE	0.5/1 MLE

Incubators, Culture Systems & Centrifuges

Incubators

- CGBA (Commercial Generic Bioprocessing Aparatus), Bioserve Space Technologies
  - -10ºC to +37 ºC.
- ABRS (Advanced Biological Resarch System)

  Temperature control to 8 °C below ambient
  PAR, ethylene removal, CO2 control
  Green Fluorescent Protein (GFP) imager.

- EMCS (European Modular Cultivation System), operated cooperatively between US and European Space Agency
  - Two centrifuges for plants and small animals spin from 0 to 2 G

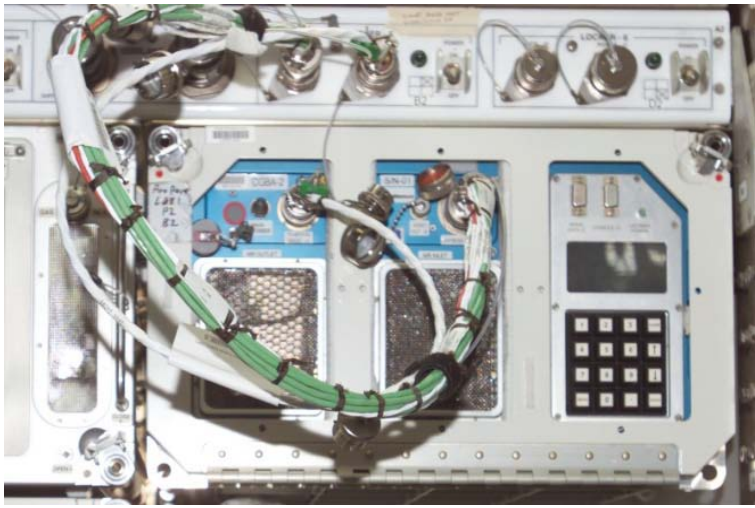

Commercial Generic Bioprocessing Apparatus (CGBA)

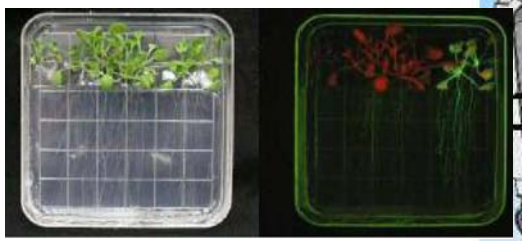

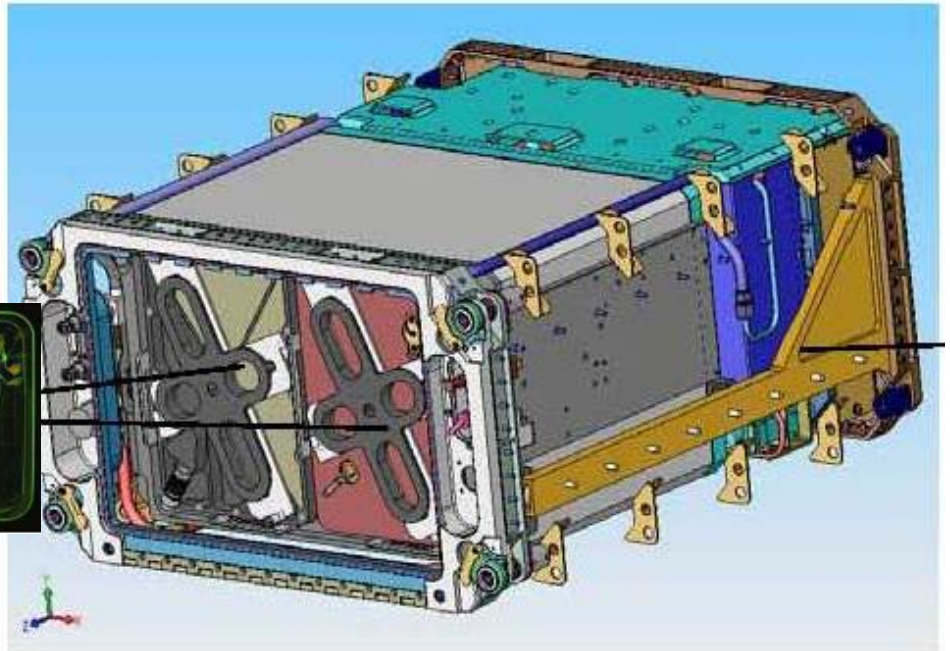

Advanced Biological Research System

Centrifuges of EMCS

Our Windows on the Earth

US Laboratory Window
50-cm diameter
Telescope-quality optical glass

Service Module Window
40-cm diameter

The Cupola
80-cm diameter
(top window)

Window Observational Research Facility Protects the US Lab window and provides services and mountings for instruments in the window

ISS External Research Facilities

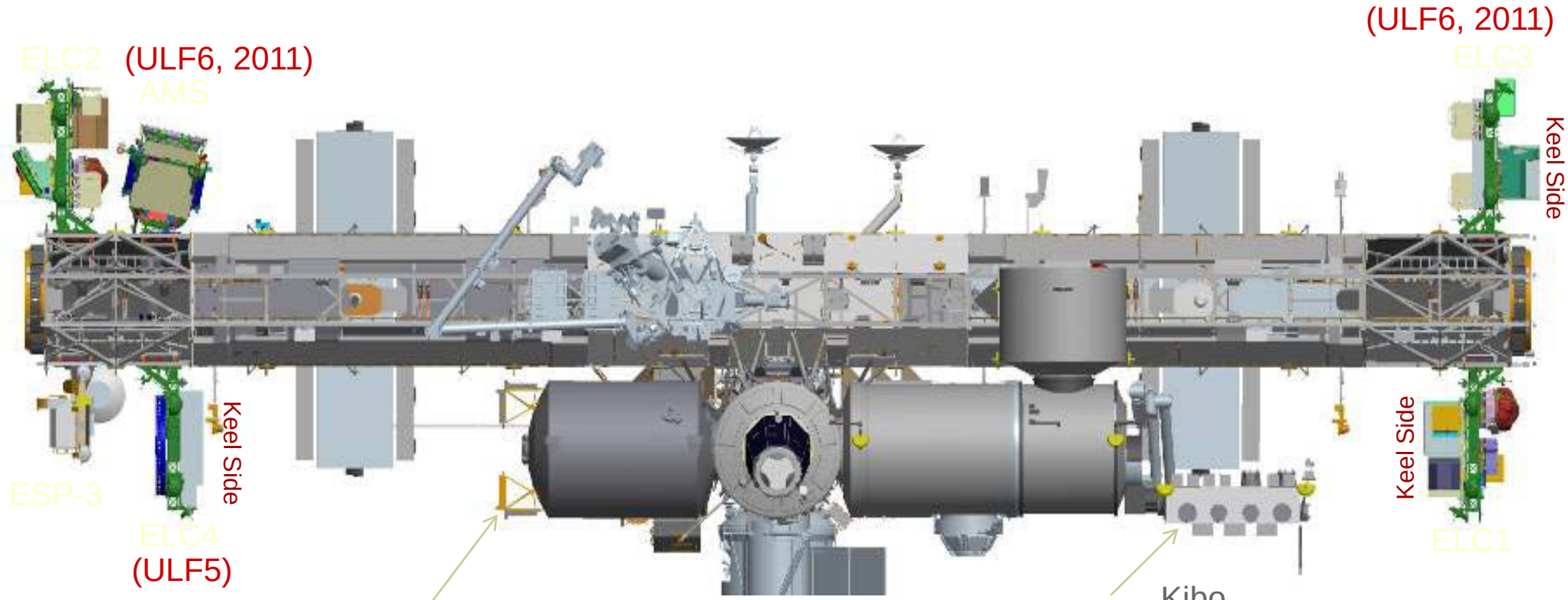

Columbus
External Payload Facility
(2 sites NASA, 4 sites total)

Kibo
External Facility
5 sites NASA, 10 sites total

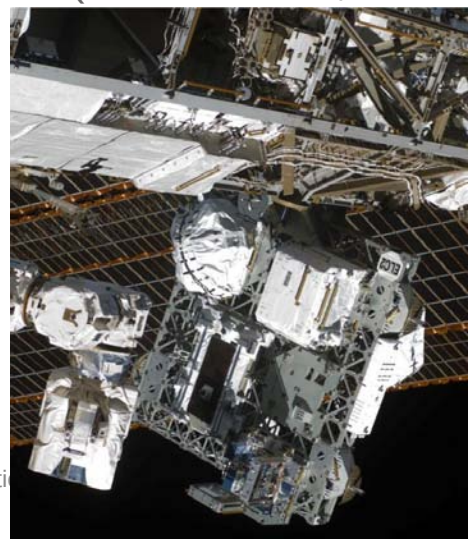

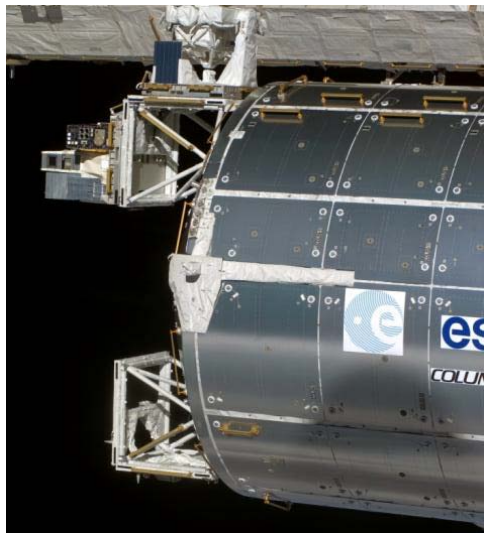

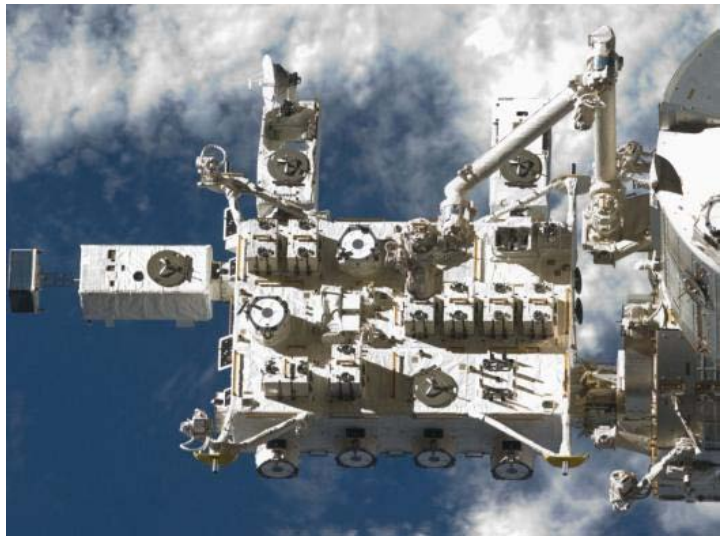

Recent ISS Assembly Science Facilities

Japanese Experiment Module - Kibo

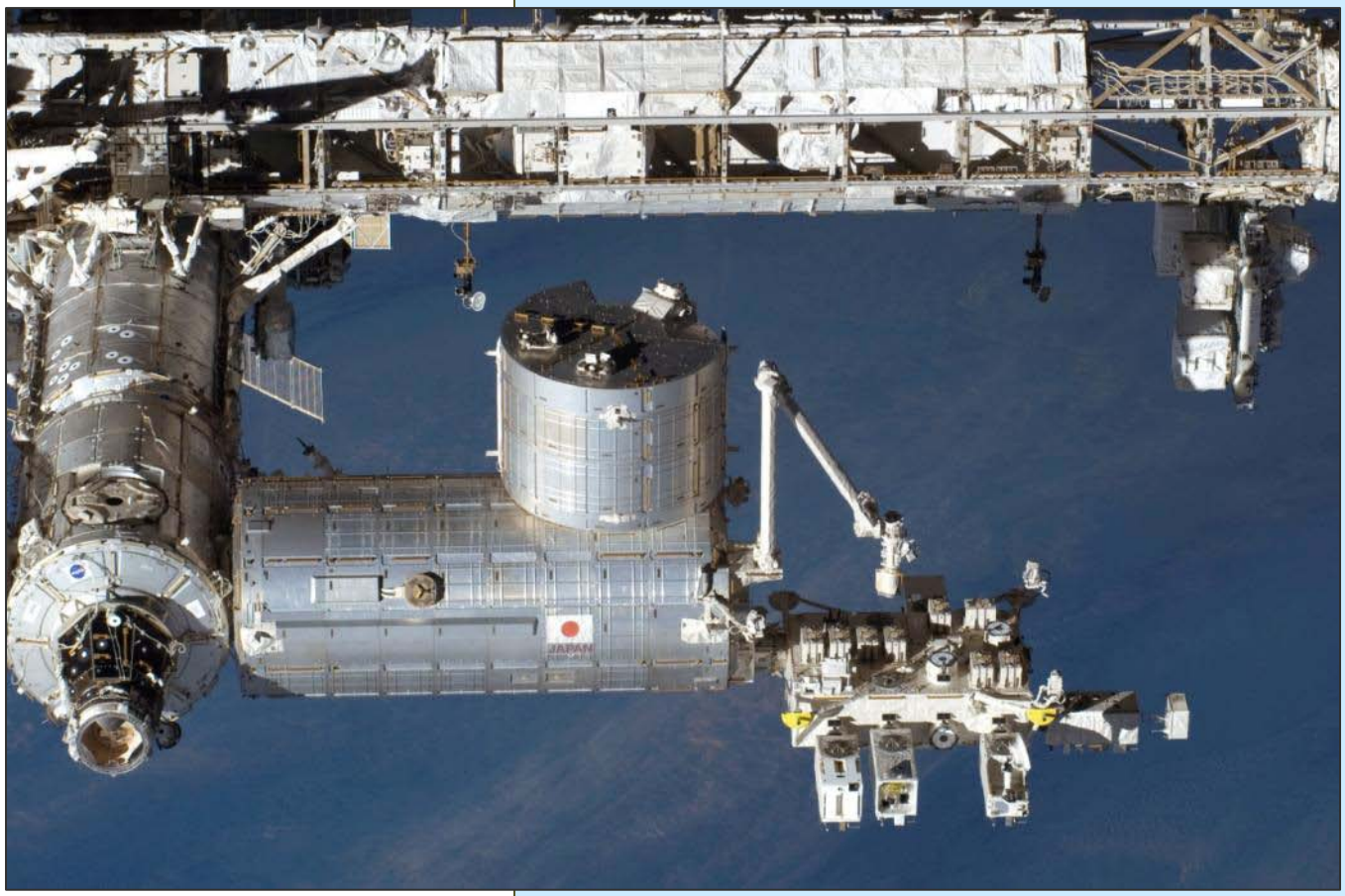

- *5 external payload sites allocated to NASA on the JEM Exposed Facility*
- *6 internal active payload rack locations allocated to NASA inside the JEM Pressurized Module*

JEM EF Overview

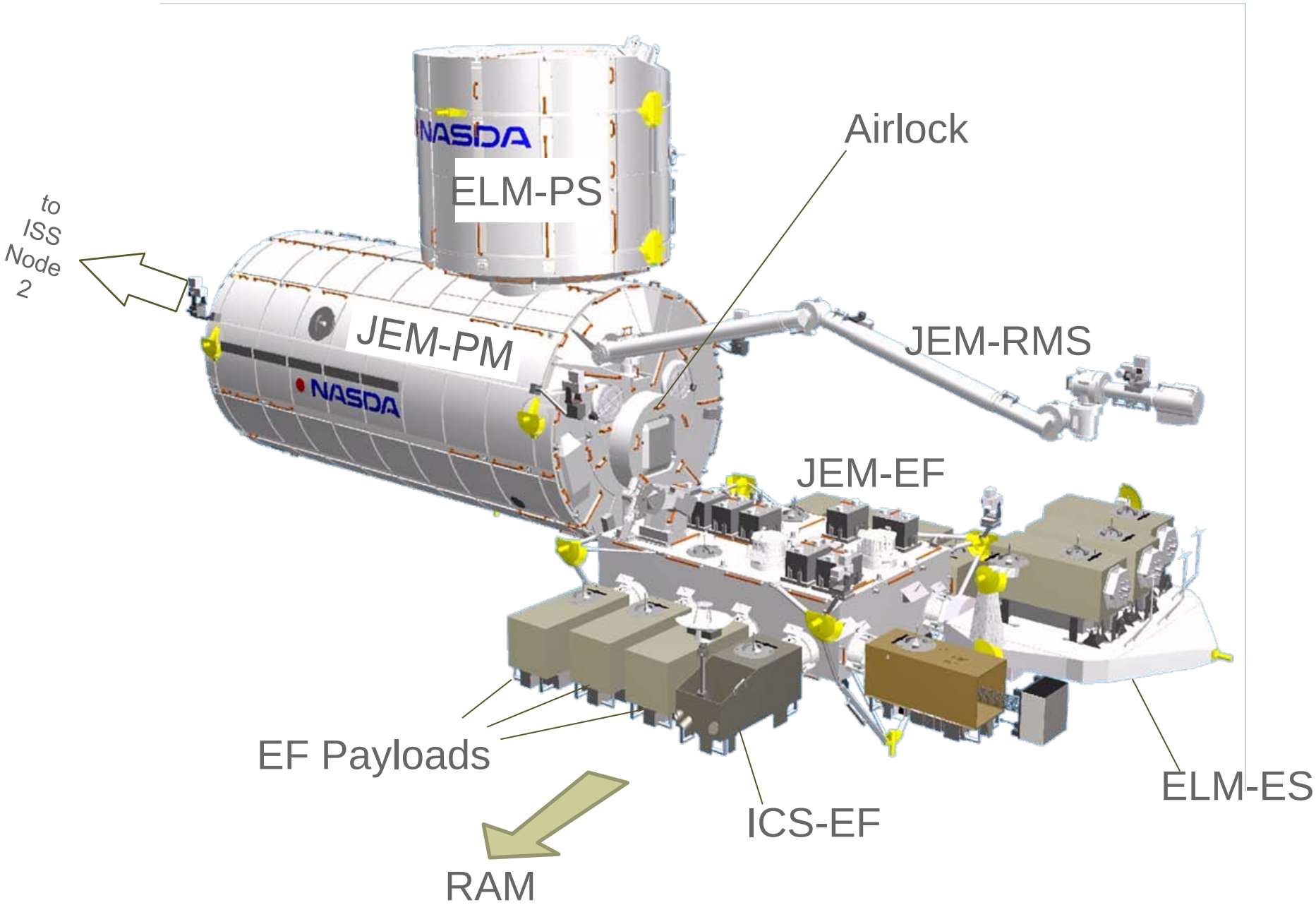

JEM EF External Research Accommodations

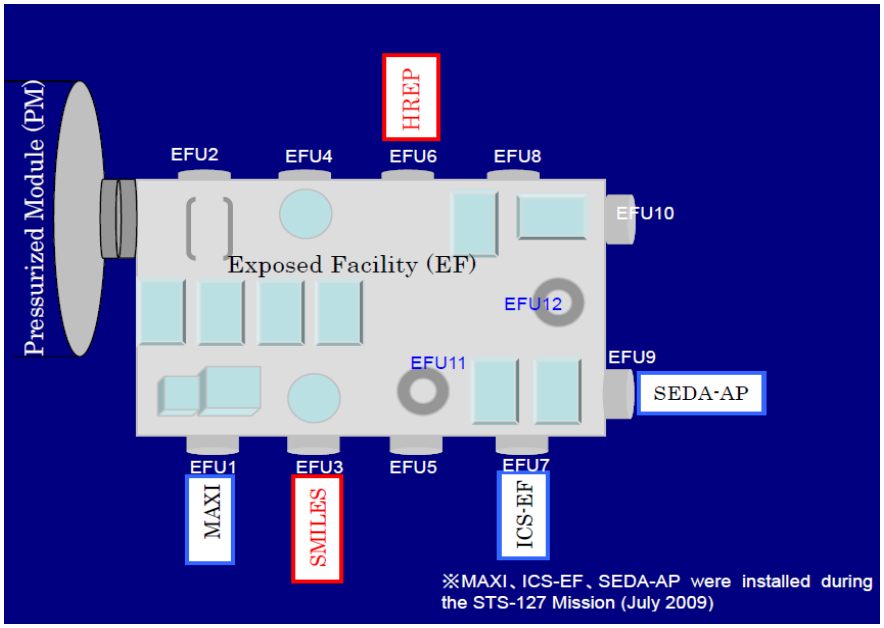

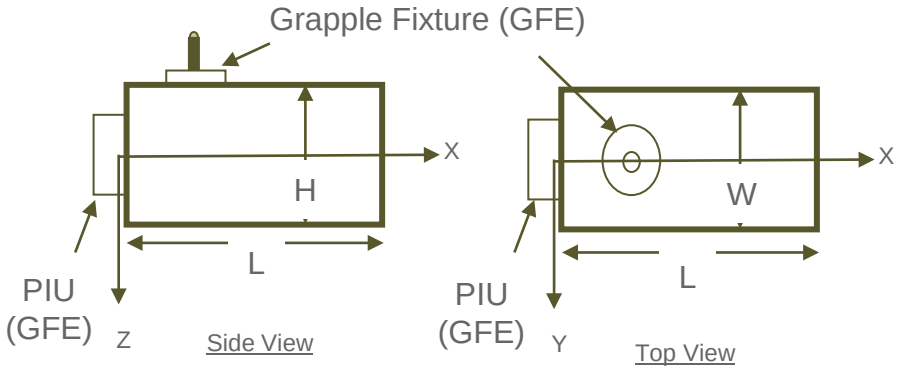

Axis	mm	ft	inch
W	800	2	7.50
H	1000	3	3.37
L	1850	6	0.83

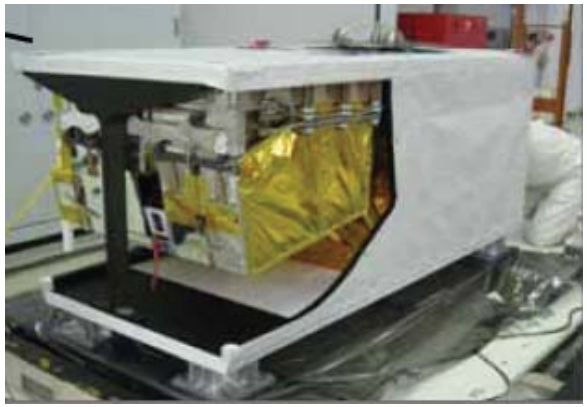

NASA/DOD HREP payload

Mass capacity	550 kg (1,150 lb) at standard site 2,250 kg (5,550 lb) at large site
Volume	1.5 m^3
Power	3-6 kW, 113 – 126 VDC
Thermal	3-6 kW cooling
Low-rate data	1 Mbps (MIL-STD-1553, two way)
Medium-rate data	1EEE-802.3(10BASE-T, two way) *
High-rate data	43 Mbps (shared, one way downlink)
Sites available to NASA	5 sites

* **Ethernet bus is tested to 100BASE-T capacity. Upgrade to 100BASE-T is being worked by JAXA**

JEM EF EFU Location Overview

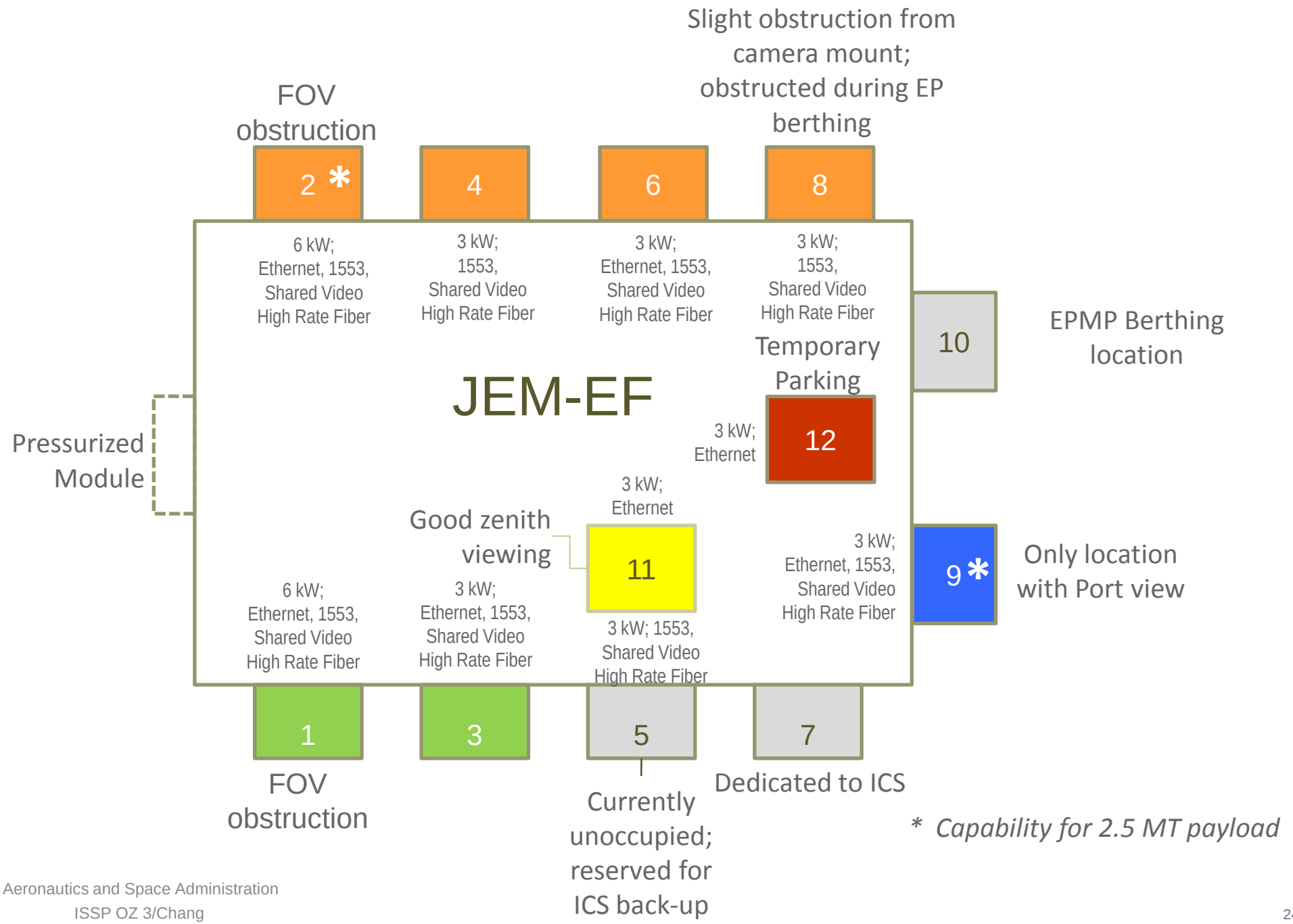

* *Capability for 2.5 MT payload*

JEM-EF Detailed Accommodations by Site

Location	Viewing	Payload Size	Description / Notes	Power	Data
1	Ram, Nadir, Zenith	500 kg	Ram field of View (FOV) obstruction by JEM module	6 kW	Ethernet, 1553, Video, High Rate
3	Ram, Nadir, Zenith	500 kg	Clear view	3 kW	Ethernet, 1553, Video, High Rate
5	Ram, Nadir, Zenith	500 kg	ICS System back-up site (negotiable?)	3 kW	Ethernet, 1553, Video, High Rate
7	Ram, Nadir, Zenith	500 kg	ICS-dedicated	-	-
9	Port, Zenith, Nadir	2.5 MT	Best volumetrically for large payloads (up to 2.5 MT), but not necessarily the best viewing	3 kW	Ethernet, 1553, Video, High Rate
2	Wake, Nadir, Zenith	2.5 MT	Can hold large payloads, but has an FOV obstruction by JEM module	6 kW	Ethernet, 1553, Video, High Rate
4	Wake, Nadir, Zenith	500 kg	Clear view	3 kW	1553, Video, High Rate
6	Wake, Nadir, Zenith	500 kg	Clear view	3 kW	Ethernet, 1553, Video, High Rate
8	Wake, Nadir, Zenith	500 kg	Obstruction during EP berthing, slight obstruction from camera mount	3 kW	1553, Video, High Rate
10	Wake, Nadir, Zenith	500 kg	EPMP berthing site	-	-
11	Zenith only	500 kg	Good Zenith viewing	3 kW	Ethernet
12	Zenith only	500 kg	Temporary stowage location	3 kW	Ethernet

Columbus EF Overview

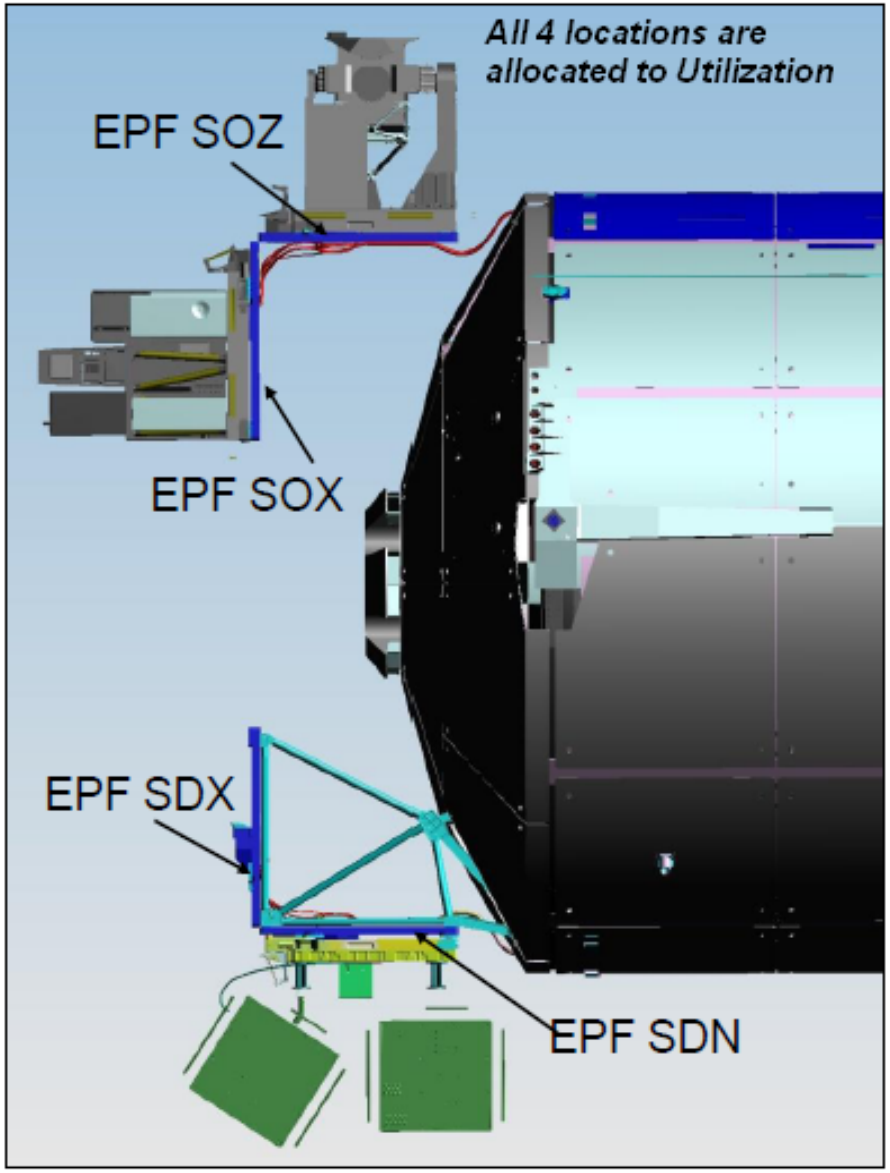

Location	Viewing	Payload Size	Power	Data
SOZ	Zenith	226 kg + CEPA	1.25 kW at 120 VDC 2.5 kW max	Ethernet, 1553
SOX	Ram			
SDX	Ram			
SDN	Nadir			

Columbus EF External Research Accommodations

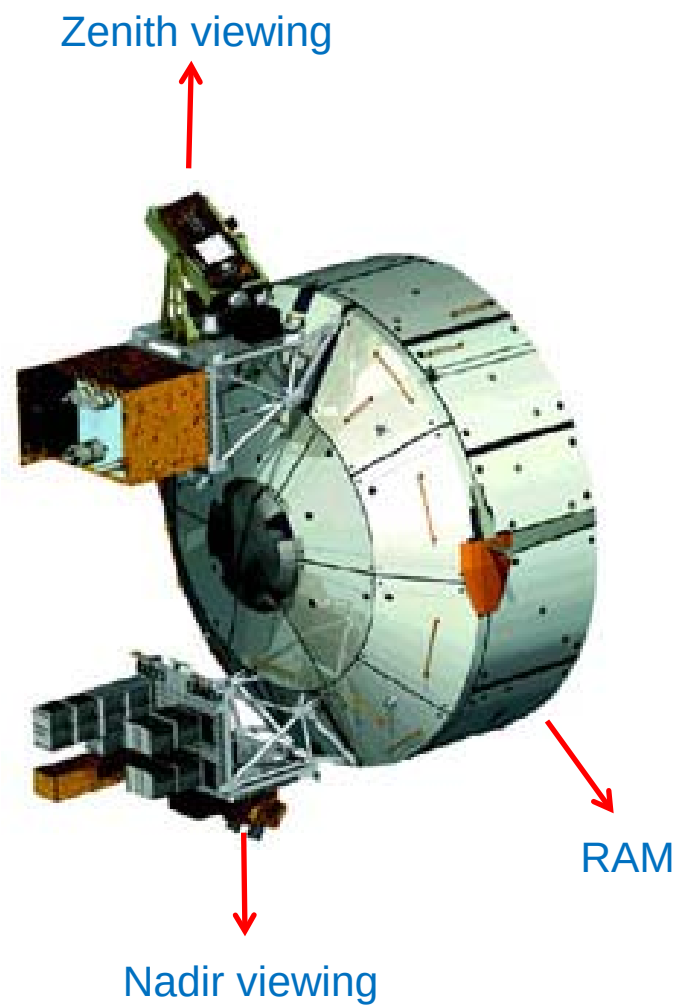

Mass capacity	550 kg (1,150 lb) at standard site 2,250 kg (5,550 lb) at large site
Mass capacity	230 kg (500 lb)
Volume	1 m^3
Power	2.5 kW total to carrier (shared)
Thermal	Passive
Low-rate data	1 Mbps (MIL-STD-1553, two way)
Medium-rate data	2 Mbps (shared, two way) *
Sites available to NASA	2 sites

*** Ethernet bus is tested to 100BASE-T capacity. Upgrade to 100BASE-T is being worked by NASA ODAR project**

Payload Allowable Up-Mass & Volume Summary Table

Attach Payload Location	Allowable Payload Weight (including Flight Support Equipment)	Accommodation Weight (including adapter plate)	Total Weight	Payload Volume (W x H x L)
HTV Exposed Pallet (JEM EF Payload)	979 Lb (445 Kg)	121 Lb (55 Kg)	1100 Lb (500 Kg)	31.5” x 39.4” x 72.8” (800mm x 1000mm x 1850 mm)
HTV Exposed Pallet (ExPA, CEPA Payload)	See ExPA & CEPA payload specification for ELC & CEF	See ExPA & CEPA payload specification for ELC & CEF	*See ExPA & CEPA payload specification for ELC & CEF	*See ExPA & CEPA payload specification for ELC & CEF
ELC (ExPA)	490 Lb (222 Kg)	250 Lb (114 Kg)	740 Lb (336 Kg)	34” x 49” X 46” (863mm x 1244mm x 1168 mm)
Columbus (CEPA)	388 Lb (176Kg)	250 Lb (114 Kg)	638 Lb (290 Kg)	34” x 49” X 46” (863mm x 1244mm x 1168 mm)
JEM-EF	979 Lb (445 Kg)	121 Lb (55 Kg)	1100 Lb (500 Kg)	31.5” x 39.4” x 72.8” (800mm x 1000mm x 1850 mm)

* Location constraint applies in HTV Exposed Pallet

Express Logistics Carriers Overview

Payload Locations Circled

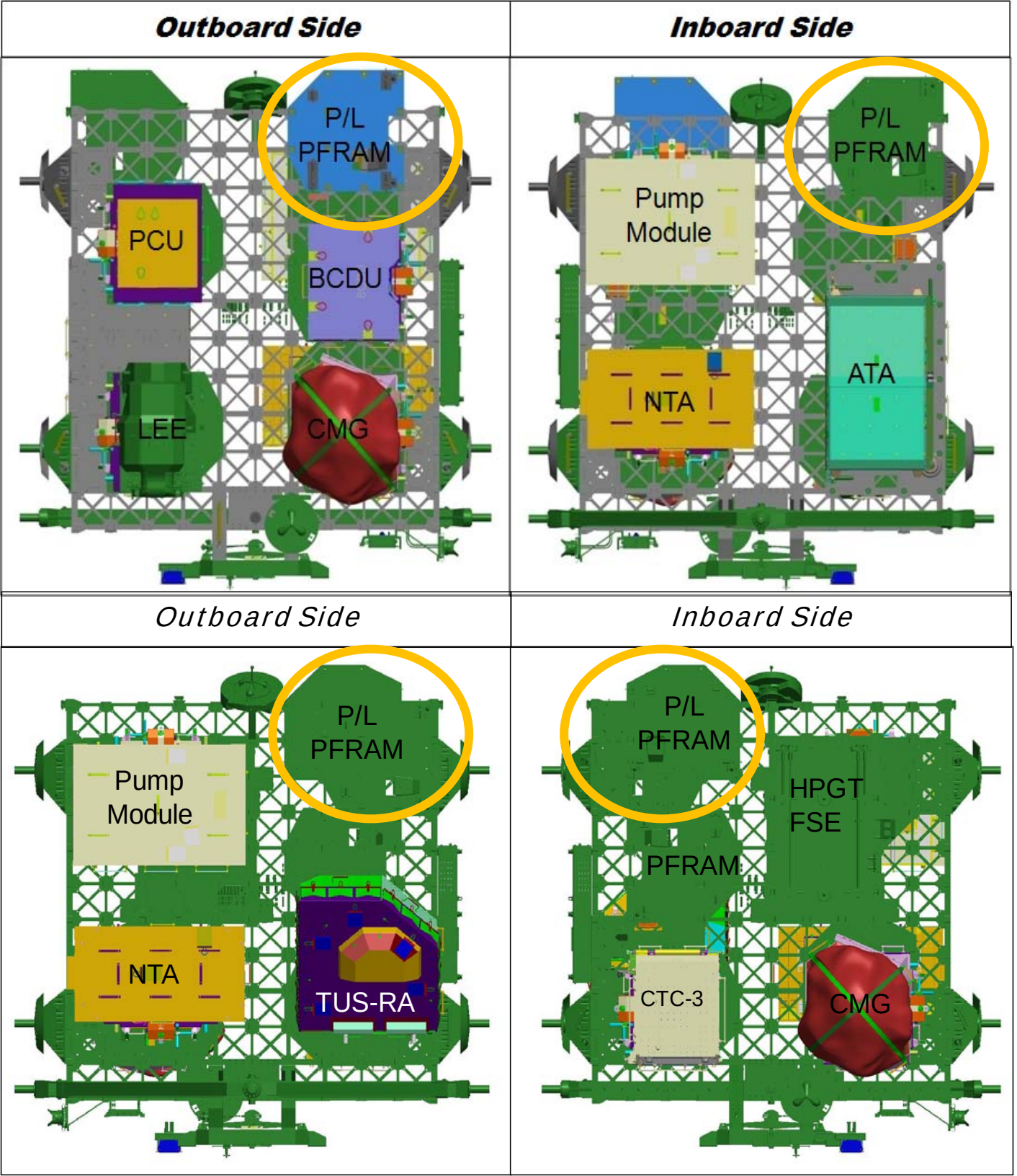

ELC-1
Port lower
2 Nadir payload sites

ELC-2
Starboard upper
2 Zenith payload sites

Express Logistics Carriers Overview

Payload Locations Circled

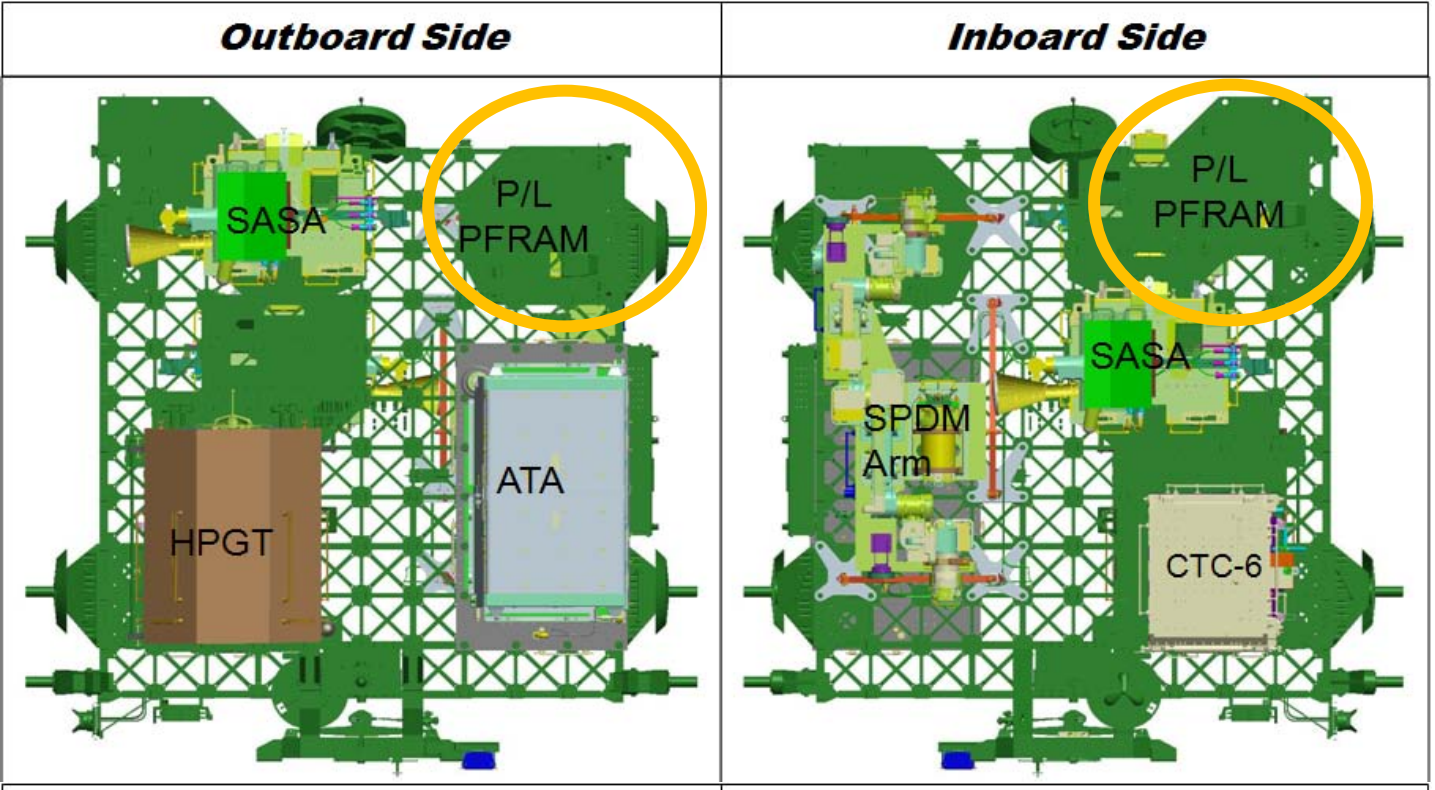

ELC-3
Port lower
2 Zenith payload sites

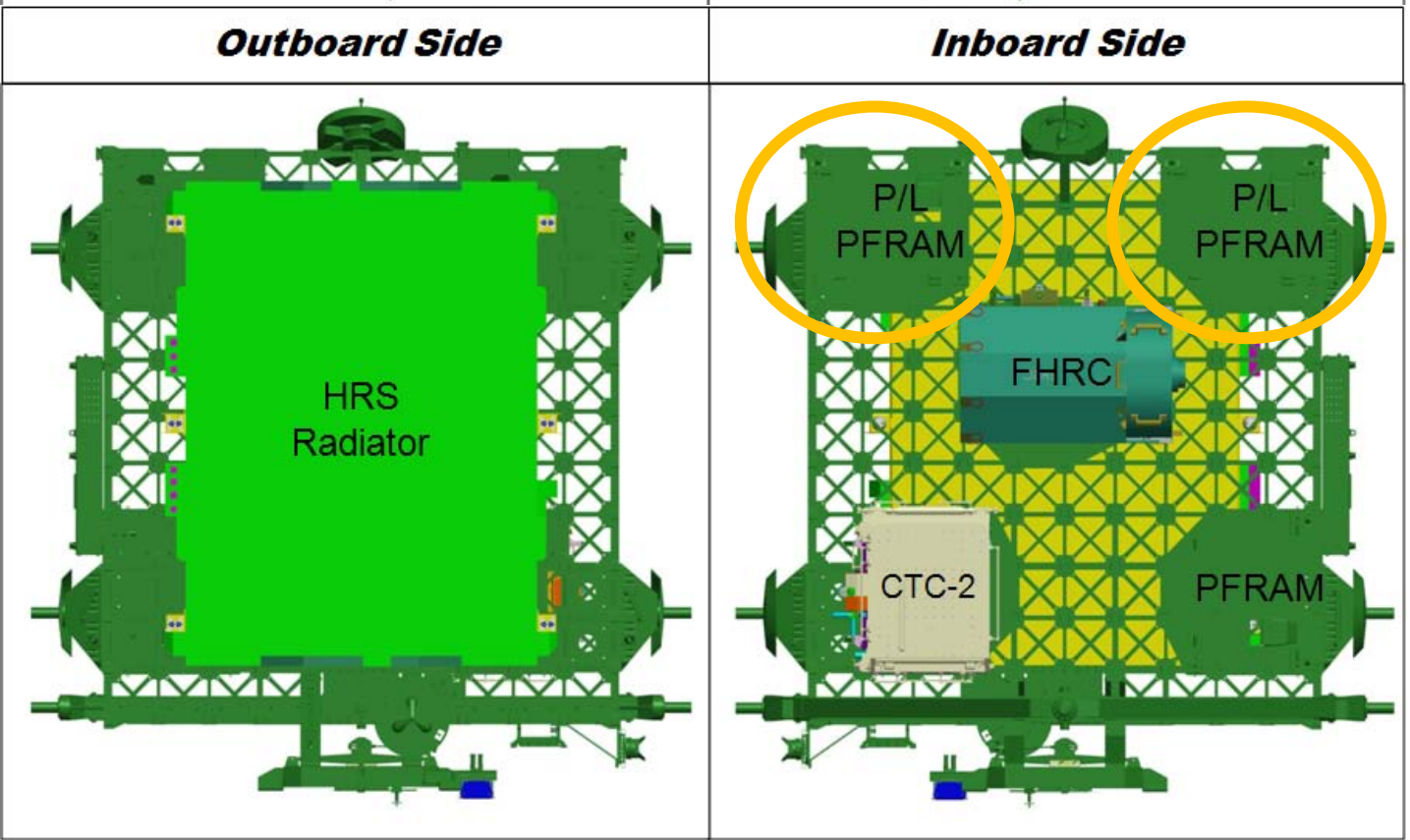

ELC-4
Starboard lower
2 Nadir payload sites

External Research Accommodations

Express Logistic Carrier

ELC Single Adapter Resources (2 NASA payload sites per ELC)	
Mass capacity	227 kg (500 lb)
Volume	1 m^3
Power	750 W, 113 – 126 VDC; 500 W at 28 VDC/adapter
Thermal	Active heating, passive cooling
Low-rate data	*1 Mbps (MIL-STD-1553)
Medium-rate data	*6 Mbps (shared) - Return link (payload to ISS) only
Sites available per ELC	2 sites
Total ELC sites available	8 sites

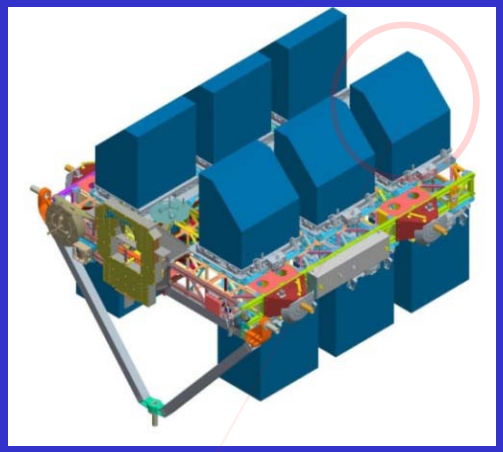

Research Payload ExPA (see next chart)

Proposed C&DH Enhancement to each Research Payload site
Two Way wireless LAN

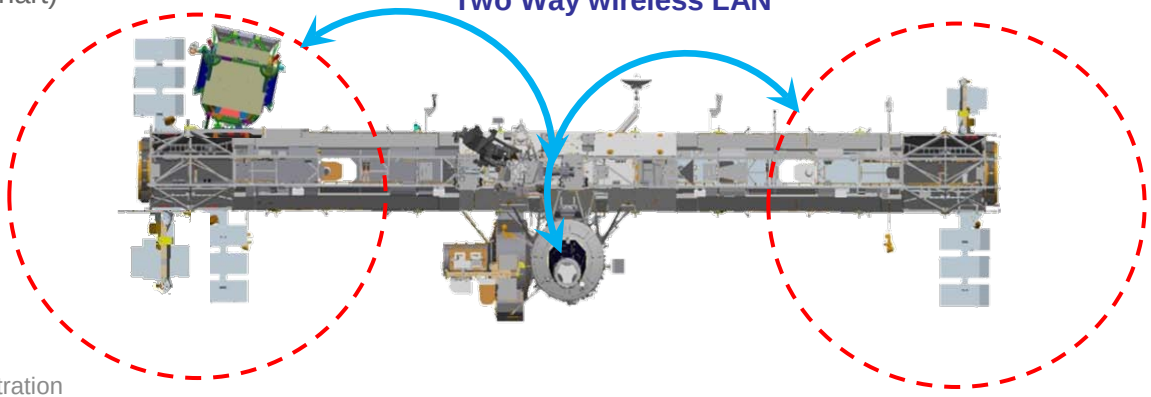

Express Pallet Adapter (ExPA) Assembly
(GFE)

Express Pallet Adapter (ExPA) Assembly		
	ExPA overall Mass	255 lb
	ExPA overall dimension	46.05” x 47” x 13.06” (H)
	ExPA payload carrying capability	34” x 46” x 49” (H) and 500 lb”
	Payload electrical interface	Power(120VDC & 28VDC): Four NATC connectors Data (1553, Ethernet): Six NATC connectors
	Payload thermal interface	Active heating, passive cooling
	Payload structural interface	2.756” X 2.756” Grid with 250-28 UNF Locking Inserts and 1.625” diameter Shear Boss Provisions
	EVA compatibility	EVA handrail provisions
	EVR compatibility	All EVR interfaces on ExPA

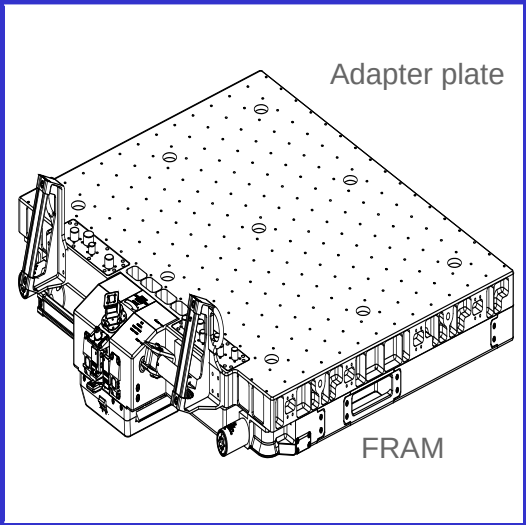

ISS Contamination Environment Description For Truss Attached Payload

- The International Space Station provides an exceptionally clean environment to external payloads and science assets
- External contamination control requirements limit contaminant deposition to 130Å/year on external payloads and ISS sensitive surfaces

  Specified levels are lower than any previous space station (Mir, Skylab, Salyut) by several orders of magnitude

- Measurements of contaminant deposition on ISS returned hardware have demonstrated that requirements are met at ISS payload sites

Experiment	Side	Requirement (130Å/year)	Measured
MISSE 2	ram	520 Å (4 years)	50 Å
	wake	520 Å (4 years)	500 Å
Node 1 nadir window cover	nadir	390 Å (3 years)	50 Å

Data provided by Boeing, June 2010

ISS Quiescent Mode Truss Vibratory Environment For External Payload Pointing Instrument

Data measured on ISS S3 truss

- ISS quiescent mode = No thruster firings, dockings, EVA, or robotics operations
- Typical response, not worst case
- Maximum per octave band

-SDMS S3B1N on-orbit accelerometer data.
-Snapshot of 3 10-minute data takes
- All data taken on March 16, 26, and 27, Stbd SARJ Rotating, exercise, 3 crew.

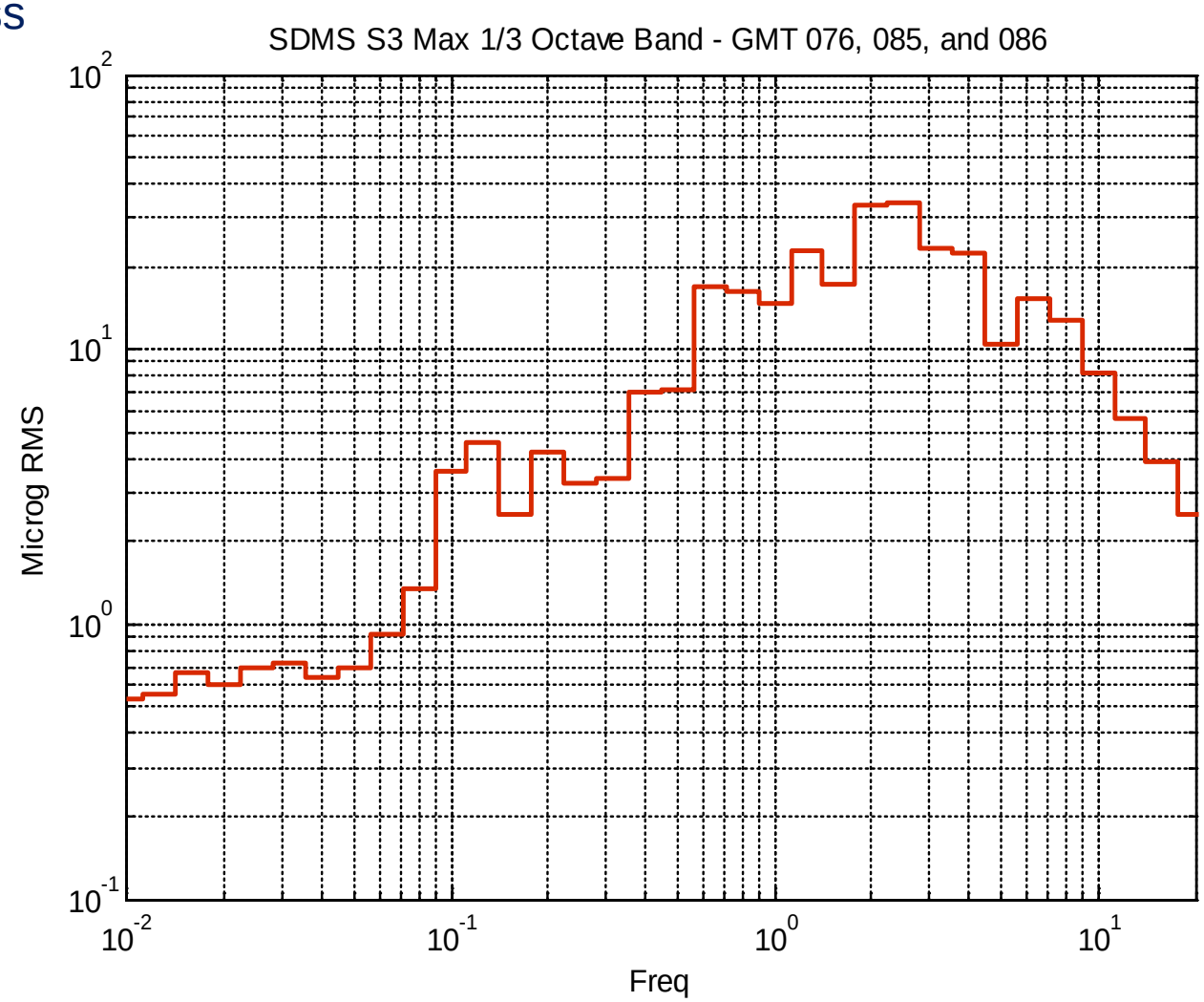

ULF-4 analysis concluded peak ELC rotations on the order of 0.03 degrees (quiescent mode)

Data provided by Boeing, June 2010

ISS Attitude Torque Equilibrium Attitude (TEA) & Wobble Oscillation Description

For Stage configurations (i.e.; no Orbiter or Orbiter sized vehicle docked on the ISS) in the foreseeable future, the predicted TEA ranges are:

Roll: -1.0 ~ +3.0 deg
Pitch: -7.0 ~ +2.0 deg
Yaw: -15 ~ +15 deg.

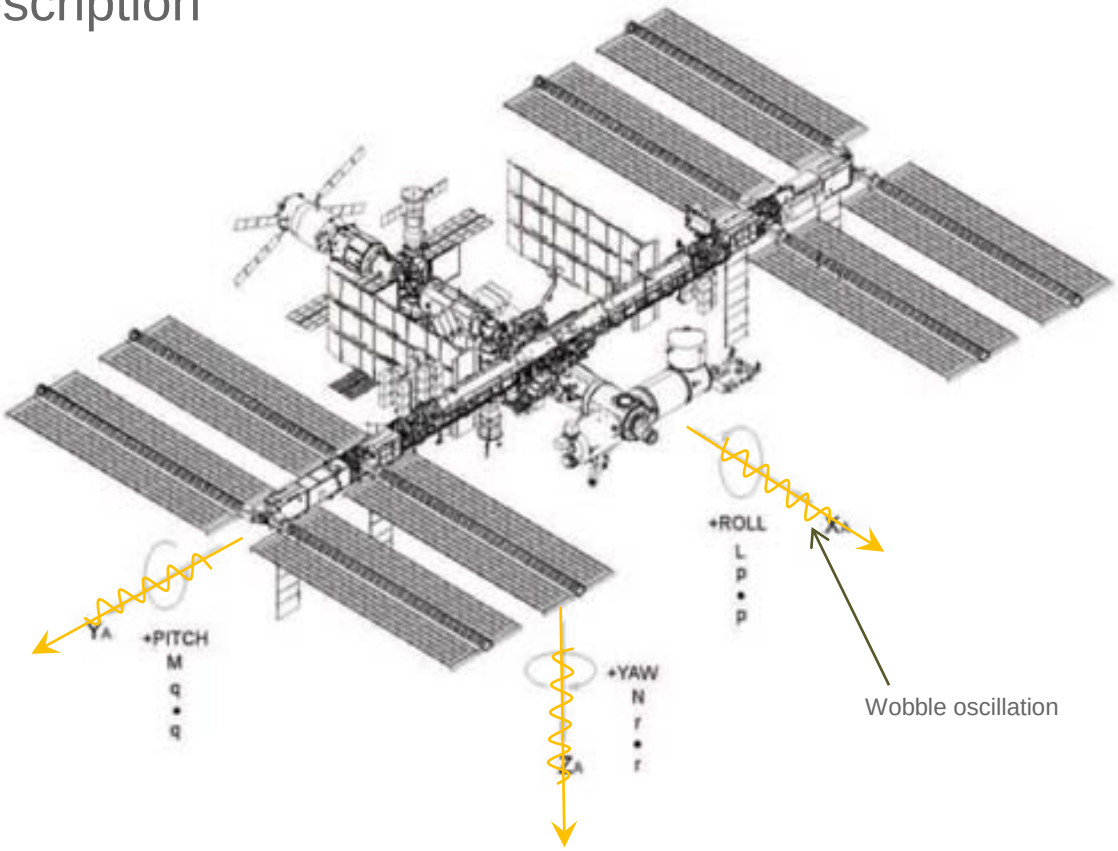

Momentum Manager Controller Peak to Peak Attitude Wobble Oscillation

Performance Descriptions	Peak to Peak Attitude Oscillations Per Orbit			Peak Attitude Variation from Steady-State Orbit-Average Attitude		
	Roll (X) (deg)	Pitch (Y) (deg)	Yaw (Z) (deg)	Roll (X) (deg)	Pitch (Y) (deg)	Yaw (Z) (deg)
Non-Micro-Gravity (Assembly Stages) Non-Propulsive (Momentum Manager) Attitude Control Performance Requirement	10.0	10.0	10.0	+/- 5	+/- 5	+/- 5
Micro-Gravity (Assembly Complete) Non-Propulsive (Momentum Manager) Attitude Control Performance Requirement	7.0	7.0	7.0	+/- 3.5	+/- 3.5	+/- 3.5
Typical Steady-State Performance of **Minimum** *CMG momentum oscillation* Momentum Manager Controller	1.6	1.6	2.0	+/- 0.8	+/- 0.8	+/- 1
Typical Steady-State Performance of **Minimum** *Attitude oscillation* Momentum Manager Controller	1.6	0.4	0.2	+/- 0.8	+/- 0.2	+/- 0.1
Typical Steady-State Performance of **Minimum** *CMG momentum & Attitude oscillation* **Blended** Momentum Manager Controller	1.6	0.7	1.2	+/- 0.8	+/- 0.35	+/- 0.6

ISS Transportation Post-Shuttle

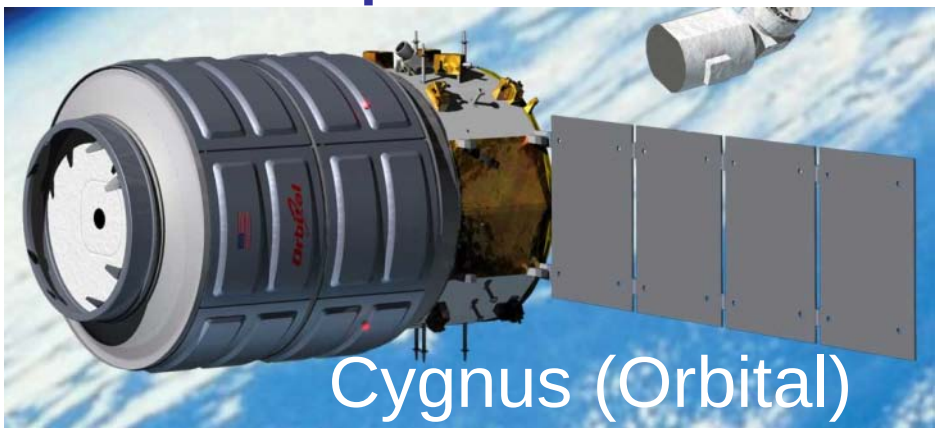

Progress/Soyuz (Energia)

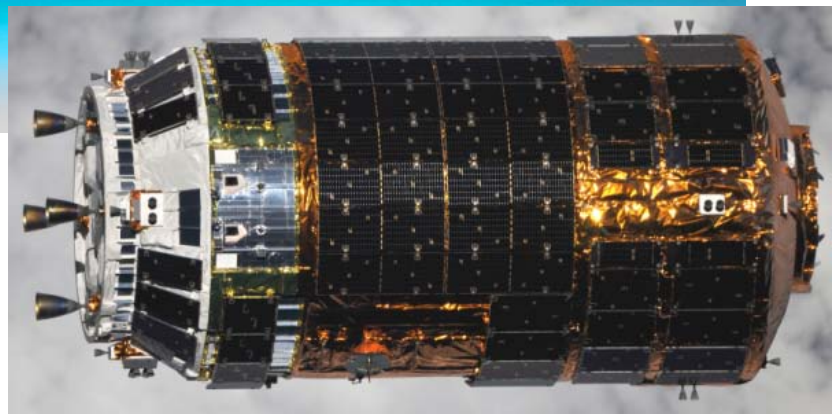

HTV (JAXA)

ATV Cargo Capabilities

Up mass

- Internal

  Powered: None

  Late Load

  » Up to 28 bags (not CTBE) of late access

  Racks

  » Up to 8 passive racks

- External

  None

- On Dock

  Cargo: L-14 weeks

  Late Load: L-4 weeks

Down mass

- Internal

  Disposal only

- External

  None

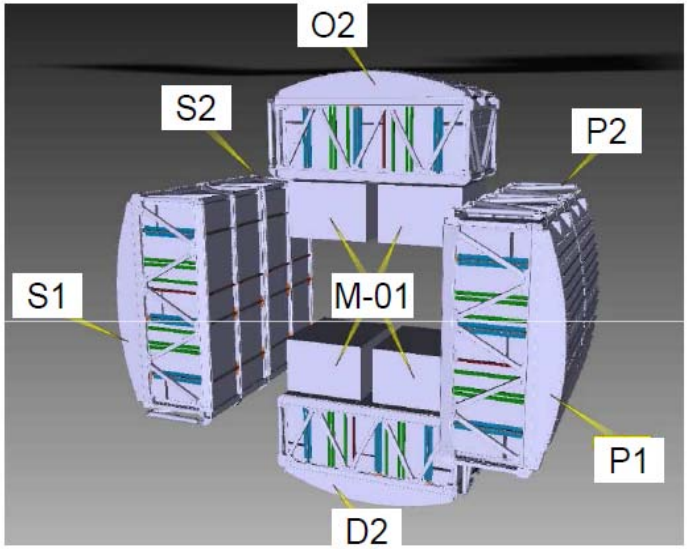

ATV-2 Racks with M-01 bags

HTV Cargo Capabilities

Up mass

- Internal

  Powered: None

  Late Load

  » Maximum 3 CTBE (0.5 or 1.0 CTB), each <20 kg

  » Additional possible if negotiated in advance.

  Racks

  » Up to 8 passive racks

  » Forward Bay: ISPR compatible

  » Aft Bay racks fixed: HTV Resupply Rack

- External

  Exposed Pallet (on following chart)

- On Dock

  Cargo: L-6 months

  Late Load: L-6 weeks

Down mass

- Internal

  Disposal only

- External

  Disposal only

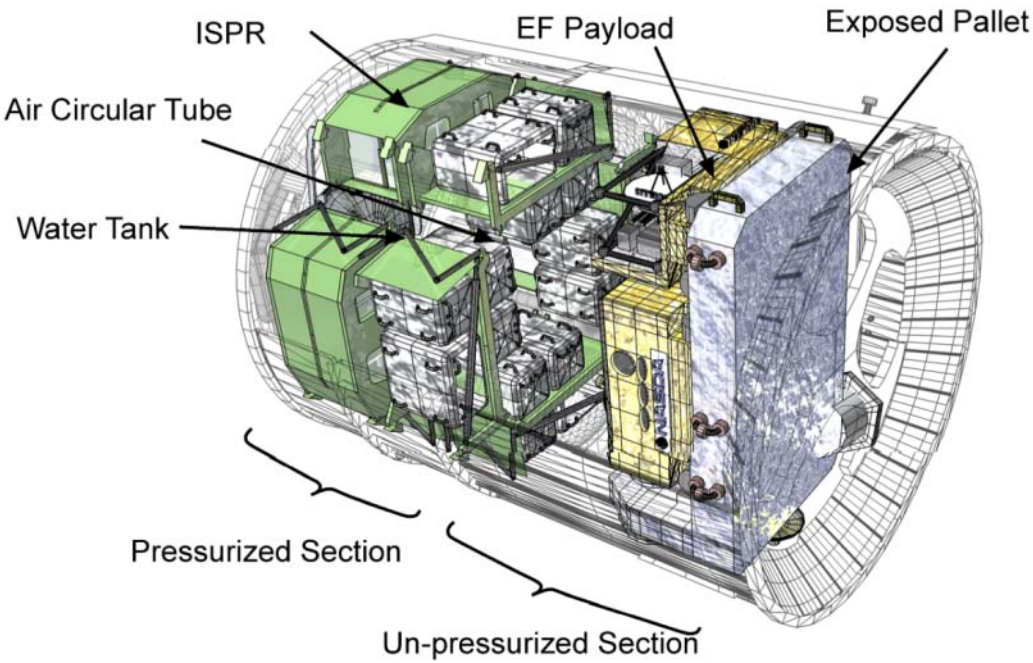

HTV External Pallet Configurations

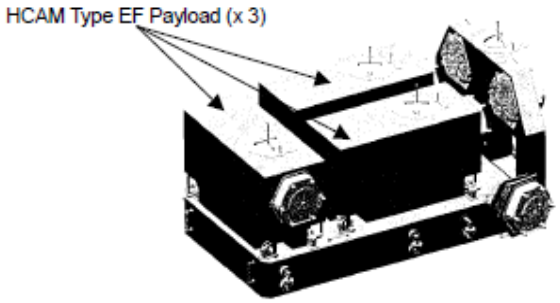

Fig. 3.3.2-1 Type I-a: HCAM Type EF Payload (x 3)

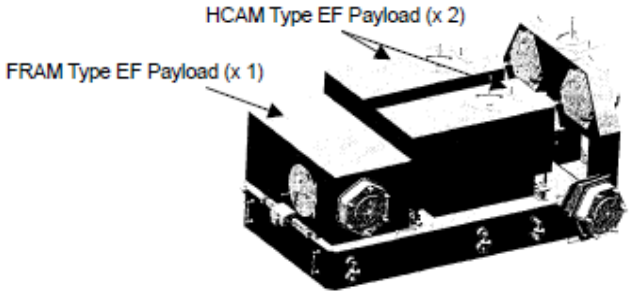

Fig. 3.3.2-2 Type I-b: HCAM Type EF Payload (x 2) and FRAM Type EF Payload (x 1)

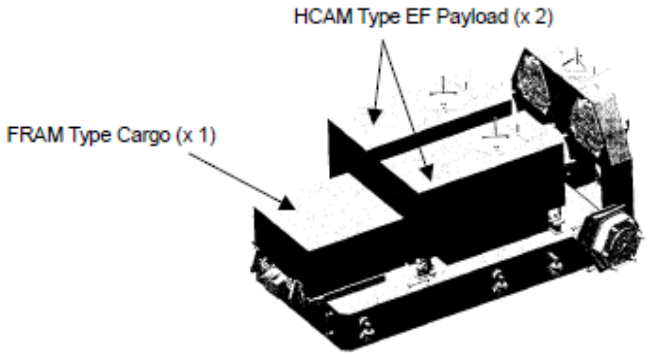

Fig. 3.3.2-3 Type I-b': HCAM Type EF Payload (x 2) and FRAM Type Cargo (x 1)

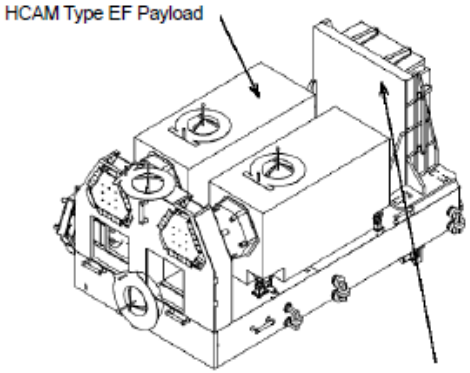

TBD
(Battery Transportation Demonstration)

Fig. 3.3.2-4 Type I-c: HCAM Type EF Payload (x 2) and Battery Transportation Demonstration (x 1)

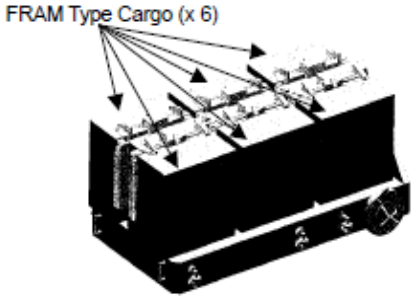

Fig. 3.3.2-5 Type III-a: FRAM Type Cargo (X6)

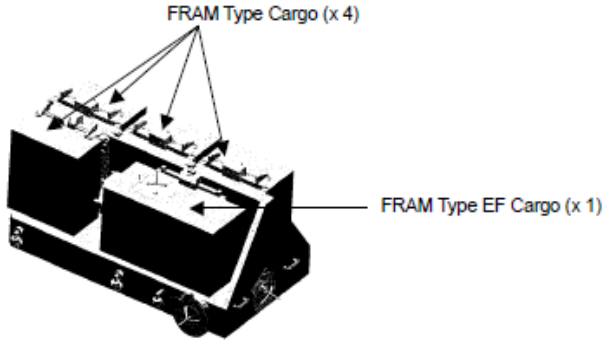

Fig. 3.3.2-6 Type III-b: FRAM Type EF Payload (X1) and FRAM Type Cargo (X4)

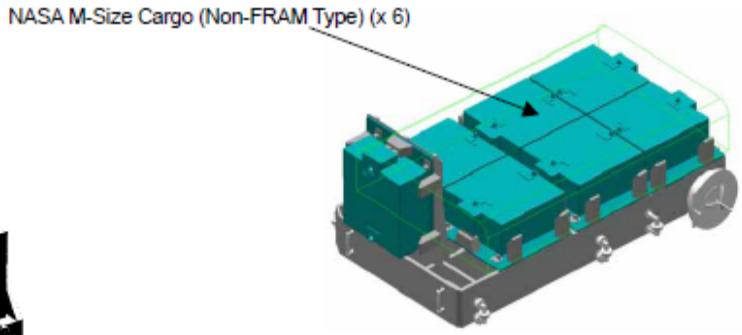

Fig. 3.3.2-7 Type III-c: Non-FRAM Type Cargo (X6)

Progress Cargo Capabilities

Up mass

- Internal

  Powered: Special allowance only

  Late Load

  Racks: None

  Items up to 8-10 kg in vehicle containers

  Larger items installed in special transport frames

- External

  None

Down mass

- Internal

  Disposal only

- External

  None

Soyuz Cargo Capabilities

Up mass

- Internal
  - Powered: Special allowance only
  - Late Load
  - Racks: None
  - Items up to 5 kg in vehicle containers
  - Larger items installed in special transport frames
- External
  - None

Down mass

- Internal
  - Items up to 5 kg in container under crew seat
  - Special container available for larger items if only two crew on return
- External
  - None

Dragon Cargo Capabilities

Up mass

- Internal
  - Powered: Double MLE
  - Late Load: T-12 hrs for powered MLE; TBD days for nominal
  - Racks (SpaceX-designed)
    - » ~3300 kg mass
- External
  - Trunk capability

Down mass

- Internal
  - Powered: Double MLE
  - ~1700 kg return
  - Early destow at dock available
  - Fast boat return available
- External
  - Disposal only

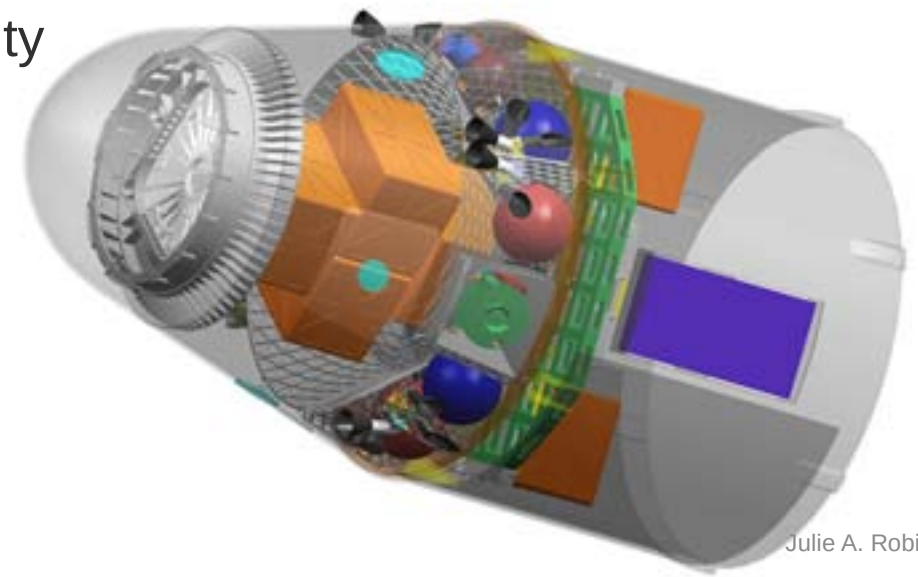

Cygnus Cargo Capabilities

Up mass

- Internal

  Powered: Double MLE

  Late Load: TBD

  Racks

  » 2000 kg mass (standard)

  » 2700 kg mass (expanded)

- External

  None

Down mass

- Internal - Disposal only
- External – None

What does it cost to fly to ISS?

- ISS Program Provides (at no charge to user):
  - Upmass for US Payloads sponsored by NASA HQ or ISS National Laboratory
  - On-orbit accommodations from US allocations (sub-allocations related to US National Lab users)
  - Power, thermal, data, on-orbit operations services
  - Crew tending, if needed (internal volume)
  - Disposal at end of life and sample return
  - ISS Program side of planning, safety, and flight certification
- Payload Developer Provides (funding from outside ISS Program may come from grants from NASA organizations, other government agencies, or private sector)
  - Support of payload development
  - Provides developer packages for review by planning, safety and flight certification
  - Provides ground support for payload operations, and transfers data received from Huntsville as needed

Backup

External Manifest Details

Acronyms

References and More Information

External Manifesting and ISS Locations (draft through 2015 shown)
ELCs, Columbus-EF

FLIGHTS		Calendar Year	Launched / On Orbit	2011 - Tactical		2012			2013			2014		2015				
		Month		JAN	JUN	JAN	JUL	AUG	MAY	JUL	OCT	FEB	NOV	MAR	JUN	JUL	SEP	TBD
		Flight		HTV2	HTV3	Sx3	HTV4	Sx4	Sx6	HTV5	Sx7	Sx8	Sx10	Sx11	HTV7	Sx12	Orb8	TBD
Carrier	Location	Site Number	Viewing															
ELC 1	P3 Lower	3	*Nadir*										SAGE III/ Hexapod	SAGE III/ Hexapod				
		8	*Nadir*				OPALS	OPALS	OPALS	OPALS	OPALS	OPALS	OPALS	OPALS/EuTEF-2				
ELC 4	S3 Lower	1	*Nadir*			DPP	DPP	DPP	DPP	DPP	DPP	DPP	TBD-E4-1	TBD-E4-1				
		4	*Nadir*			R2D2	R2D2	R2D2	R2D2	R2D2	R2D2	R2D2	TBD-E4-4	TBD-E4-4				
ELC 2	S3 Upper	3	*Zenith*	MISSE 8[3,4]	MISSE 8[3]	MISSE 8[3]	MISSE 8[3]	MISSE 8[3]	PRELSE	PRELSE II[3]	PRELSE II[3]	PRELSE II[3]	PRELSE II[3]	PRELSE II[3]				
		7	*Zenith*					TBD-E2-7	TBD-E2-7	TBD-E2-7	TBD-E2-7	TBD-E2-7	TBD-E2-7					
ELC 3	P3 Upper	1	*Zenith*		SCAN Testbed	SCAN Testbed	SCAN Testbed	SCAN Testbed	SCAN Testbed	SCAN Testbed	SCAN Testbed	SCAN Testbed	SCAN Testbed	SCAN Testbed / SCAN Testbed-2[5]				
		5	*Zenith*	STP-H3[4]	STP-H3	STP-H3		STP-H4	STP-H4	STP-H4	STP-H4	STP-H4	STP-H4	STP-H4				
Columbus	EPF SOZ		*Zenith*	SOLAR[4]	SOLAR	SOLAR	SOLAR	SOLAR	SOLAR	SOLAR	SOLAR[2]	TBD ESA-1[2,6]	TBD ESA-1 / TBD ESA-2[2, 6]	TBD ESA-1 / TBD ESA-2[2, 6]				
	EPF SOX		*Ram*					TBD-C-OX	TBD-C-OX	TBD-C-OX	TBD-C-OX	TBD-C-OX	TBD-C-OX	TBD-C-OX				
	EPF SDX		*Ram*								ASIM	ASIM	ASIM	ASIM				
	EPF SDN		*Nadir*								ACES	ACES	ACES	ACES				

All TBDs except TBD-ESA-1 and TBD-ESA-2 (highlighted in gold) represent NASA opportunities that have not yet been named (minimum of 1 Columbus opportunity and 3 ELC opportunities)

External Manifesting and ISS Locations (draft through 2015 shown)
JEM-EF

FLIGHTS		Calendar Year	Launched / On Orbit	2011 - Tactical		2012			2013			2014		2015				
		Month		JAN	JUN	JAN	JUL	AUG	MAY	JUL	OCT	FEB	NOV	MAR	JUN	JUL	SEP	TBD
		Flight		HTV2	HTV3	Sx3	HTV4	Sx4	Sx6	HTV5	Sx7	Sx8	Sx10	Sx11	HTV7	Sx12	Orb8	TBD
Carrier	Location	Site Number	Viewing															
JEM-EF	1		*Ram*	MAXI[4]	MAXI	MAXI	MAXI	MAXI	MAXI	MAXI	MAXI	MAXI	MAXI	MAXI				
	3		*Ram*	SMILES[4]	SMILES	SMILES	SMILES	SMILES	SMILES	SMILES				Attached Facility				
	5		*Ram*	*Systems Back-Up (ICS-EF)*														
	7		*Ram*	*Systems (ICS-EF)*														
	9[7]		*Ram*	SEDA-AP[4]	SEDA-AP	SEDA-AP	SEDA-AP	SEDA-AP	SEDA-AP	SEDA-AP / CALET[8]	CALET[8]	CALET[8]	CALET[8]	CALET[8]				
	2		*Wake*				TBD-J-2	TBD-J-2	TBD-J-2	TBD-J-2	TBD-J-2	TBD-J-2	TBD-J-2	TBD-J-2				
	4		*Wake*							TBD-J-4	TBD-J-4	TBD-J-4	TBD-J-4	TBD-J-4				
	6		*Wake*	HREP[4]	HREP	HREP	HREP		TBD-J-6	TBD-J-6	TBD-J-6	TBD-J-6	TBD-J-6	TBD-J-6				
	8		*Wake*		MCE	MCE	MCE	MCE	MCE	MCE	MCE	MCE						
	10		*Wake*	*Systems (ELM-ES/HTV)*														
	11		*Zenith*															
	12		*Zenith*	*Temp / Staging [10]*														
S3 Upper Inboard			*Zenith*	AMS[4]	AMS	AMS	AMS	AMS	AMS	AMS	AMS	AMS	AMS	AMS				

- All TBDs (highlighted in gold) represent NASA opportunities that have not yet been named (minimum of 3 sites with flight opportunities)
- Location/site numbers are color-coded to match the illustration on page 5

ISS Payload Integration Process

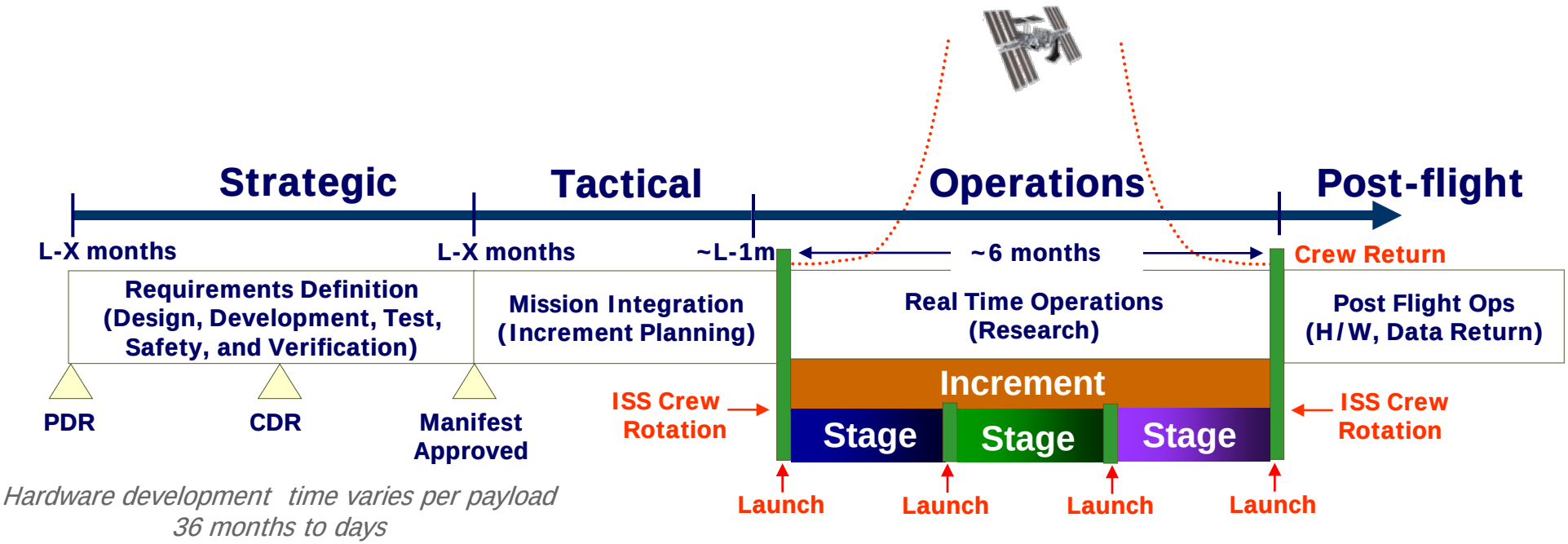

ISS Payload Control Centers

Payload Operations Center (POIC) - Huntsville

POIC: Responsible for execution of on-orbit NASA research

Mission Control Center—Houston

MCC-H: Responsible for flight command and control of overall vehicle

Mission Control Center—Moscow

MCC-M: Responsible for flight command and control of Russian segment.

Payload Ops Integration Center Interfaces

MCC-H, 4 IP Control Centers, 4 Tele-science Support Centers, 49 Tele-science Resource Kit (TReK) clients

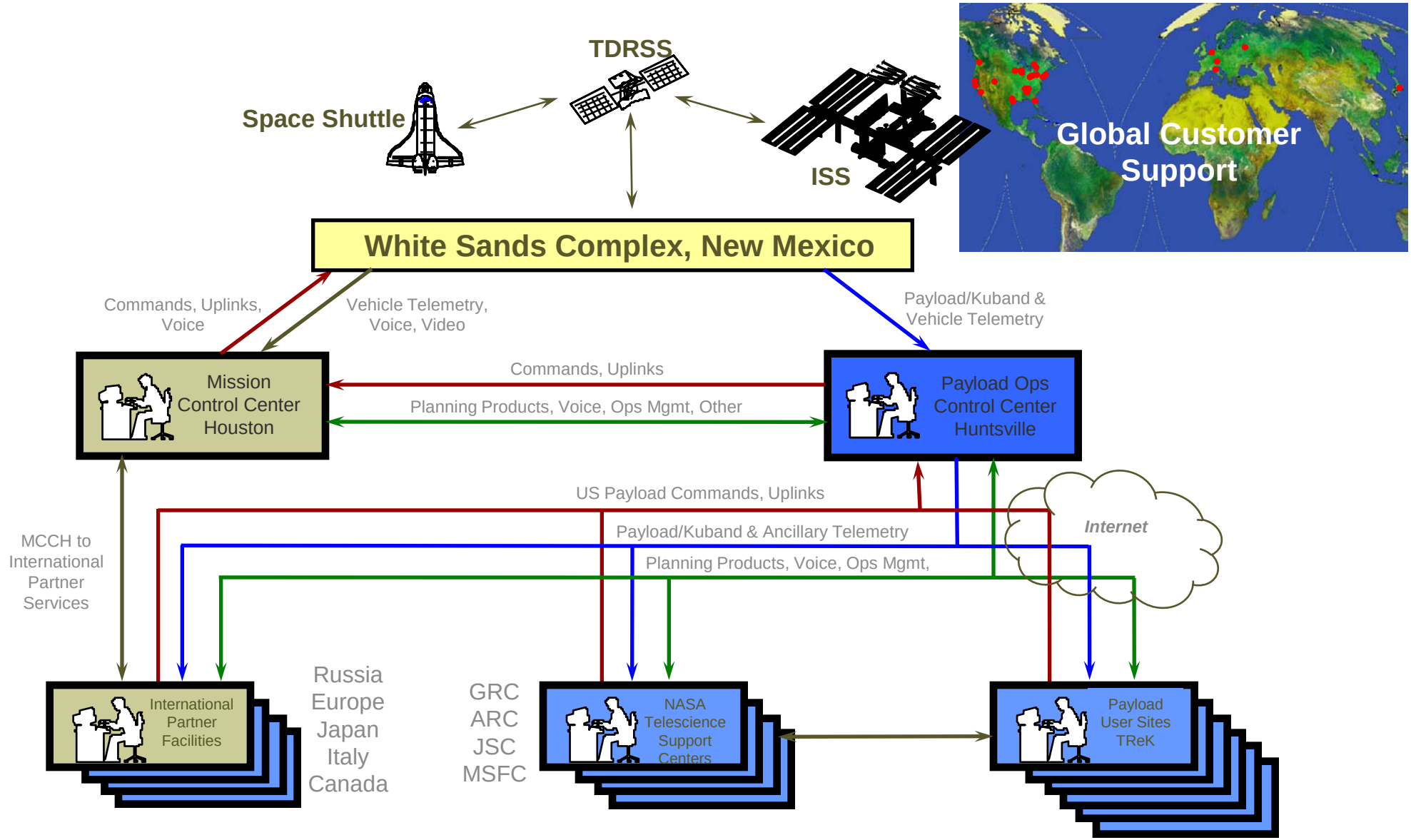

Cumulative ISS Utilization Crewtime
(US and Russian Operating Segments, All Partners)

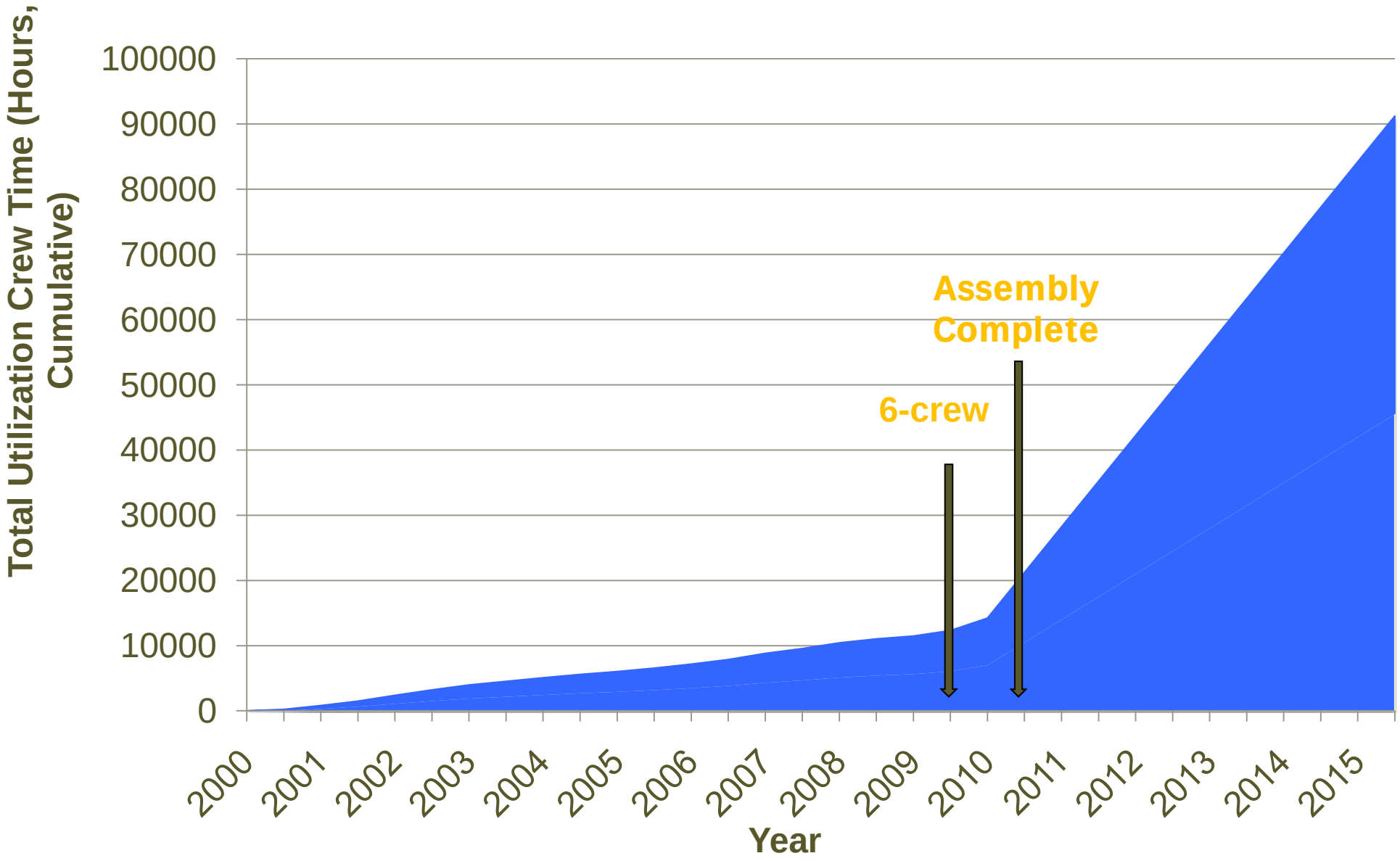

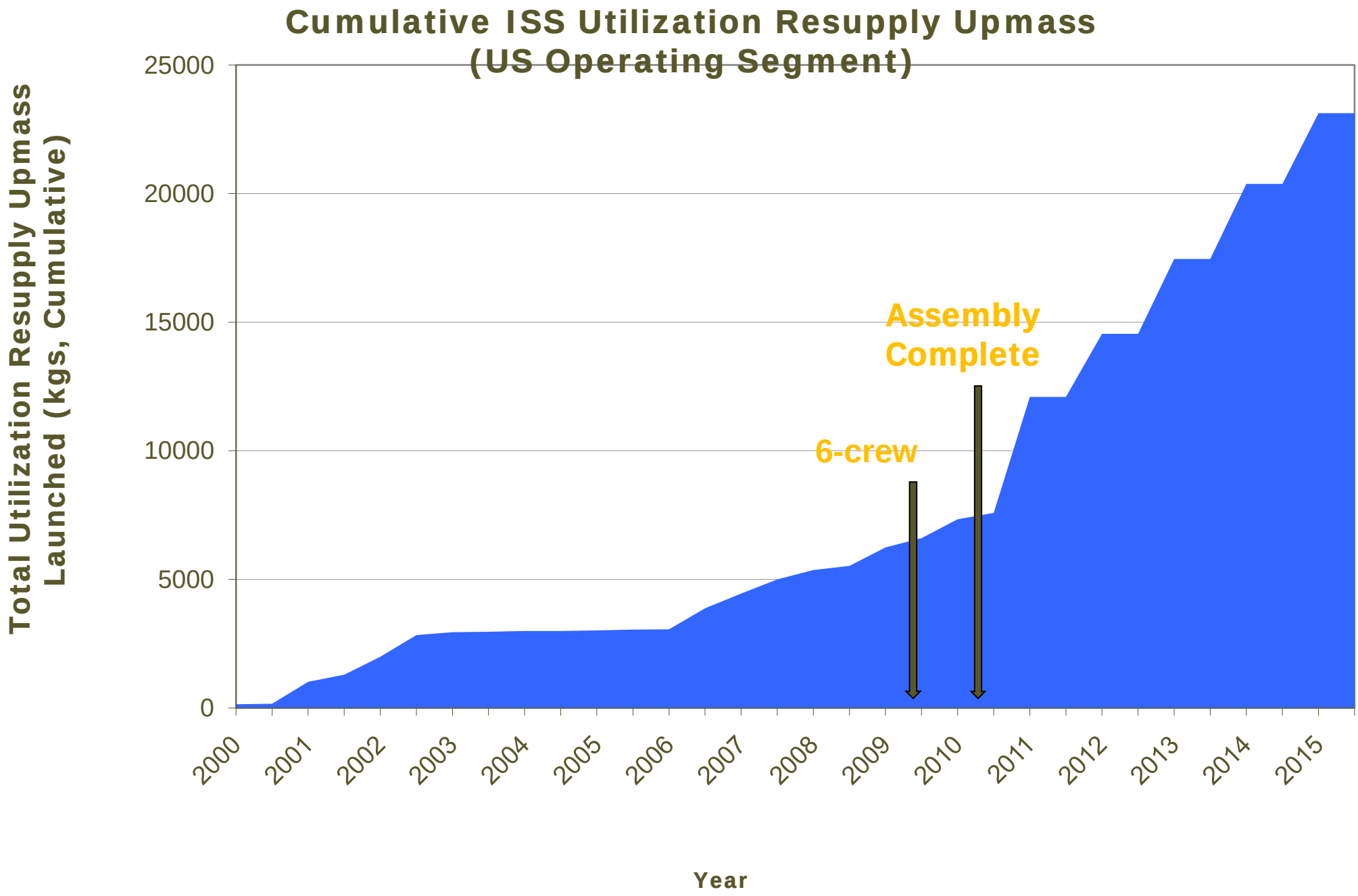
Cumulative ISS Utilization Resupply Upmass
(US Operating Segment)
Total Utilization Resupply Upmass
Launched (kgs, Cumulative)
25000
20000
15000
10000
5000
0
Assembly
Complete
6-crew
2000
2001
2002
2003
2004
2005
2006
2007
2008
2009
2010
2011
2012
2013
2014
2015
Year

For More Information

ISS Reference Guide

Cumulative Results Reports:

NASA/TP–2009–213146–REVISION A

Education on ISS 2000-2006:

NASA/TP-2006 -213721

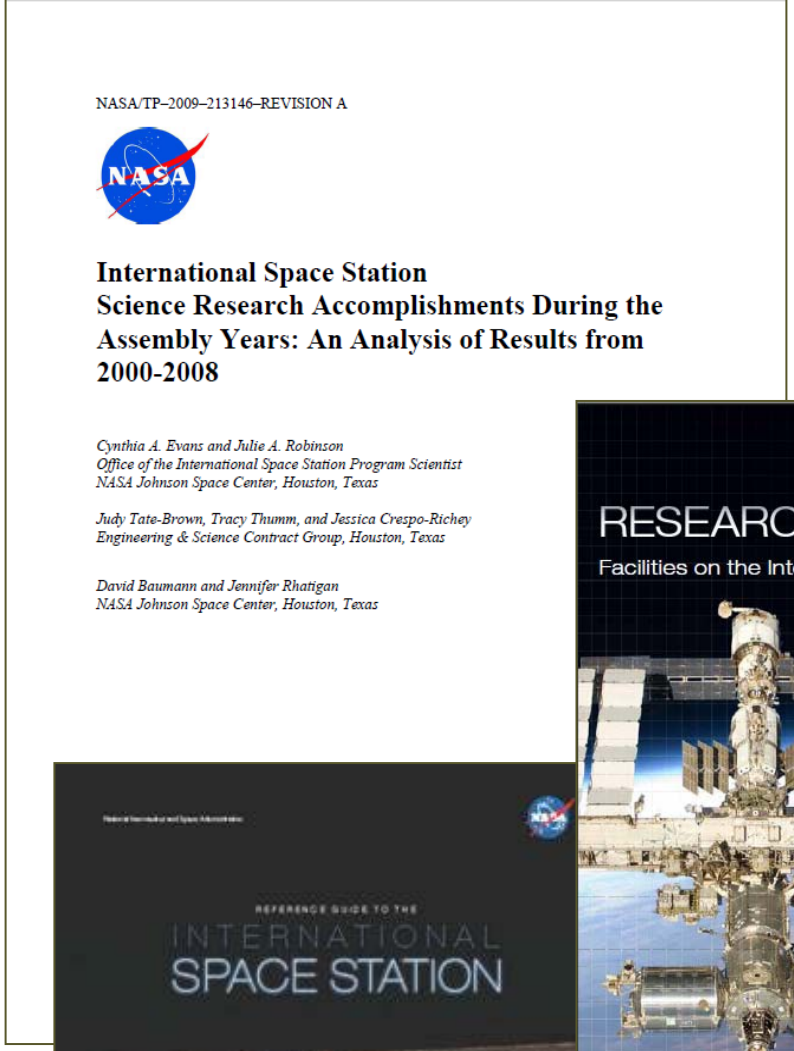

NASA/TP–2009–213146–REVISION A

International Space Station Science Research Accomplishments During the Assembly Years: An Analysis of Results from 2000-2008

Cynthia A. Evans and Julie A. Robinson
Office of the International Space Station Program Scientist
NASA Johnson Space Center, Houston, Texas

Judy Tate-Brown, Tracy Thumm, and Jessica Crespo-Richey
Engineering & Science Contract Group, Houston, Texas

David Baumann and Jennifer Rhatigan
NASA Johnson Space Center, Houston, Texas

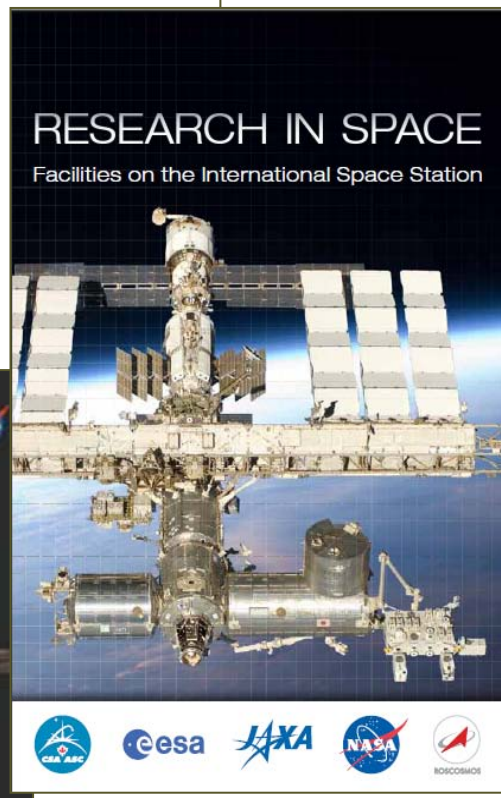

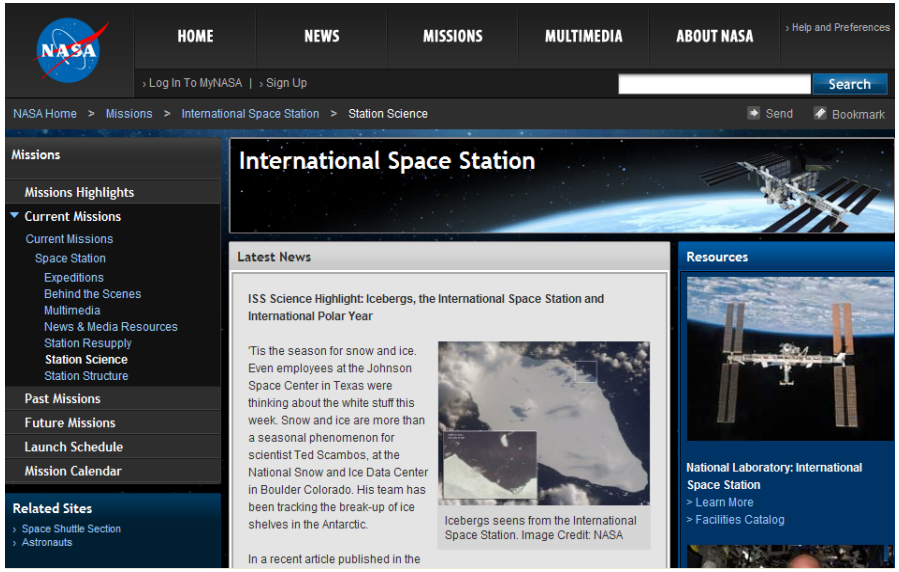

Space Station Science Webpages http://www.nasa.gov/mission_pages/station/science/

Facilities Webpages

http://www.nasa.gov/mission_pages/station/science/experiments/Discipline.html

References

- ISS Program Scientist Toolbox - http://iss-science.jsc.nasa.gov/index.cfm
- ISS National Laboratory Office - http://www.nasa.gov/mission_pages/station/science/nlab/index.html
- Advanced Avionics Development Office - http://iss-www.jsc.nasa.gov/nwo/avionics/aado/home/web/
- Attached Payload Interface Requirements Document, SSP 57003
- Common Interface Requirements Document, SSP 50835
- ATV-2 Cargo Summary (24 Sep 2009)
- HTV Cargo Accommodation Handbook, JFX-99102
- Requirements for International Partner Cargo Transported On Russian Progress and Soyuz Vehicles, П32928-103
- SpaceX Introduction For Payloads (OZ3, Jan 2010)
- Cygnus Fact Sheet (Orbital, 2009)

Acronyms

ACES	Atomic Clock Ensemble in Space
AMS	Alpha Magnetic Spectrometer
ASI	Italian Space Agency
ASIM	Atmospheric Space Interactions Monitor
ATA	Ammonia Tank Assembly
BCDU	Battery Charge Discharge Unit
CALET	Calorimetric Electron Telescope
C&DH	Command and Data Handling
CEF	Columbus Exposed Facility
CEPA	Columbus External Payload Adapter
CMG	Control Moment(um) Gyro(scope)
COL-EPF	Columbus Exposed Payload Facility
CSA	Canadian Space Agency
CTC	Cargo Transport Container
DPP	Dextre Pointing Package
ELC	External Logistics Carrier
ELM-ES	Experiment Logistics Module-Exposed Section
ELM-PS	Experiment Logistics Module – Pressurized Section
EF	Exposed Facility
EFU	Exposed Facility Unit
EPF	Exposed Payload Facility
EPMP	Exposed Pallet – Multi-Purpose

Acronyms *(Continued)*

ESA	European Space Agency
EuTEF	European Technology Exposure Facility
EVA	Extravehicular Activity
EVR	Extravehicular Robotics
ExPA	EXPRESS Pallet Adapter
FHRC	Flex Hose Rotary Coupler
FOV	Field of View
FSE	Flight Support Equipment
HPGT	High Pressure Gas Tank
HREP	Hyperspectral Imager for the Coastal Ocean(HICO)/Remote Atmospheric and Ionospheric Detection System (RAIDS) Experiment Payload
HRS	Heat Rejection Subsystem
HTV	H-II Transfer Vehicle (Japanese resupply vehicle)
ICS-EF	Inter-Satellite Communication System – Exposed Facility
ISS	International Space Station
JAXA	Japan Aerospace Exploration Agency
JEM	Japanese Experiment Module
JEM-EF	Japanese Experimental Module-Exposed Facility
JEM-PM	Japanese Experimental Module-Pressurized Module
Kg	kilogram
LAN	Local Area Network
LEE	Latching End Effector

Acronyms *(Continued)*

MAXI	Monitor All-sky X-ray Image
MCE	Multi-mission Consolidated Equipment
MIM	Multi-Increment Manifest
MiPROM	Multi-Increment Payload Resupply and Outfitting Manifest
MISSE	Materials International Space Station Experiment
NASA	National Aeronautics and Space Administration
NTA	Nitrogen Tank Assembly
ODAR	Obsolescence Driven Avionics Re-Design
OPALS	Optical Planetary Access Link for Space Station
PCU	Plasma Contactor Unit
PFRAM	Passive Flight Releasable Attach Mechanism
PIU	Power Interface Unit
P/L	Payload
PRELSE	Platform for Retrievable Experiments in a Leo Space Environment
R2D2	Robotic Refueling Dexterous Demonstration using Dextre
RMS	Remote Manipulator System
SAGE III /Hexapod	Stratospheric Aerosol and Gas Experiment III w/ Hexapod
SARJ	Solar Array Rotary Joint
SASA	S-Band Antenna Support Assembly
SCAN Testbed	Space Communication And Navigation Testbed
SDN	Starboard Deck Nadir

Acronyms *(Continued)*

SDX	Starboard Deck X-Direction
SEDA	Space Environmental Data Acquisition Equipment
SMILES	Superconducting Sub-Millimeter Wave Limb Emission Sounder
SOLAR	Solar Observatory Grouping
SOX	Starboard Overhead X-Direction
SOZ	Starboard Overhead Zenith
SPDM	Special Purpose Dexterous Manipulator
Stbd	Starboard
Sx	SpaceX (US commercial resupply vehicle)
TBD	To Be Determined
TBR	To Be Resolved
TEA	Torque Equilibrium Attitude
TUS-RA	Trailing Umbilical System-Reel Assembly
ULF	Utilization & Logistics Flight
U.S.	United States
USOS	U.S. Operational Segment

NASA