Ares I 5% Scale Model Acoustics Test (ASMAT): The first ASMAT Rocket Assist Takeoff Motor (RATO) was successfully fired on July 3. This test was performed in a horizontal configuration at Marshall Space Flight Center (MSFC) Test Stand 116. The test results will be used to characterize the motor acoustic performance for scaling purposes. A quick look data review was performed on August 2 with an initial determination that all test objectives for the horizontal test case were met. Subsequent tests will occur in the vertical configuration simulating various liftoff scenarios and will be used to characterize the liftoff acoustic and ignition overpressure environments for the Ares I vehicle.

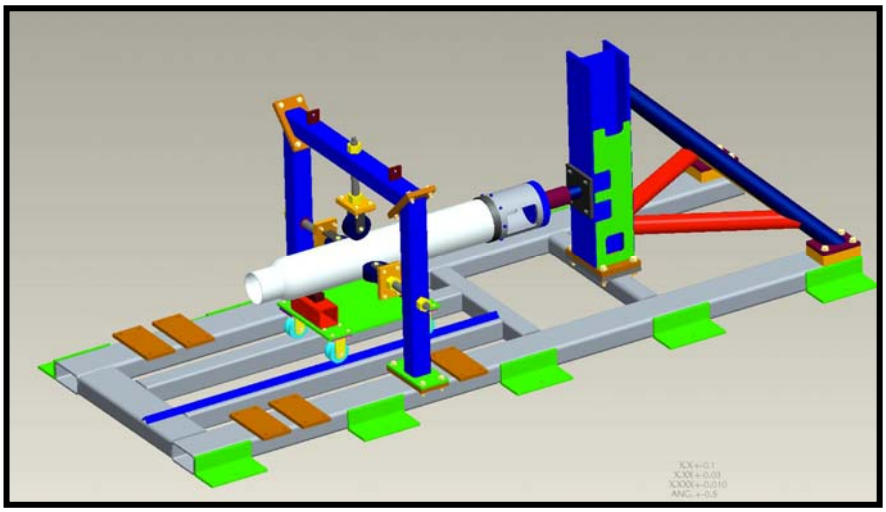

ASMAT Horizontal Test Configuration

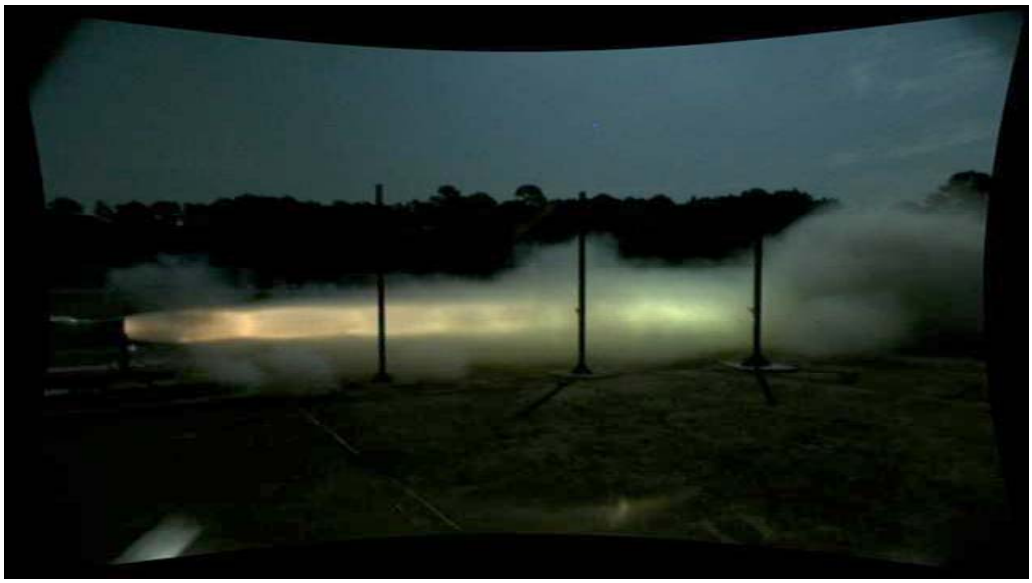

ASMAT RATO Horizontal Firing

Upper Stage Engine (USE)

Test Stand A-3: Test Stand A-3 construction is continuing with the delivery and installation of the Test Cell and Diffuser. Two of the three Test Cell wall segments can be seen installed on the Tower; the third is on the barge with the Test Cell dome and engine door hatch. The Test Cell floor and Diffuser First Stage Ejector Ring are also installed.

Installation of Test Cell and Diffuser Components at A-3

Installation of the MIT onto the TFA at A-1

Test Stand A-1: Test Stand A-1 modification is continuing with the delivery and installation of the J-2X Master Interface Tool (MIT) onto the Thrust Frame Adapter (TFA) as shown at left. The MIT is installed in the engine test stand to facilitate field routing of facility ducts and lines that interface with the engine.

Vehicle Integration (VI)

"No Roll Control System (RoCS)" Analysis Package: Ares Vehicle Integration performed a Monte Carlo analysis to determine the effects of removing RoCS on the integrated Ares vehicle. This was a multi-disciplinary effort that required inputs from: Aerodynamics; Trajectory; Guidance, Navigation, and Control (GN&C); and Upper Stage Subsystems. The results of the analysis were presented to the Constellation Systems Integration Panel (CxSIP). From an Ares vehicle perspective, the results did not identify any clear issues with flying the launch vehicle safely without RoCS. This analysis excluded crew and Orion vehicle concerns, which were presented in separate briefings.

The Ares Projects look forward to the test firing of DM-2 on August 31, and the launch of STS-133, Space Shuttle Discovery, in the fall.