# STS-132 / ULF4

## *FD 09 Execute Package*


| MSG | Page(s) | Title |
|---|---|---|
| 074A | 1 - 18 | FD09 Flight Plan Revision |
| 075 | 19 - 20 | FD09 Mission Summary |
| 076 | 21 | FD08 MMT Summary |
| 077A | 22 - 23 | FD09 Transfer Message |
| 078 | 24 - 36 | ULF4 Tool Restow |
| 079 | 37 - 40 | EVA Prep for Transfer to Shuttle |
| 080A | 41 - 42 | Spinal Elongation Big Picture Words |
| 081 | 43 | FD9 EVA Deltas |
| 082 | 44 - 49 | Descent Sample Transfer from MELFI to Glacier |
| 083 | --- | FD9 PAO Event Summary: NASA Explorer Schools Education Event (electronic only) |
| 084A | 50 - 57 | 5-MLE Bag Layout Updates |
| 085 | 58 | PDGF Keep Away Zones |


***Approved by FAO:***
*F. Reynolds*

*Last Updated: May 22 2010 4:35 AM GMT*
***JEDI*** *(**J**oint **E**xecute package **D**evelopment and **I**ntegration), v3.0*

What Really Happened on Crew Off-Duty Day

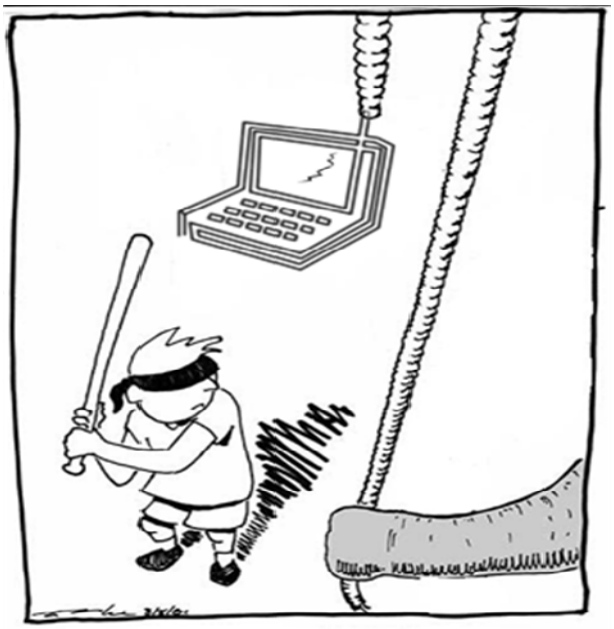

The crew enjoys a favorite past-time,
PGSC Piñata.

MSG INDEX


| MSG NO. | TITLE |
|---|---|
| 074 | FD09 Flight Plan Revision |
| 075 | FD09 Mission Summary |
| 076 | FD08 MMT Summary |
| 077 | FD09 Transfer Message |
| 078 | ULF4 Tool Restow |
| 079 | EVA Prep for Transfer to Shuttle |
| 080 | Spinal Elongation Big Picture Words |
| 081 | FD9 EVA Deltas |
| 082 | Descent Sample Transfer from MELFI to Glacier |
| 083 | FD9 PAO Event Summary: NASA Explorer Schools Education Event |
| 084 | 5-MLE Bag Layout Updates |
| 085 | PDGF Keep Away Zones |


1. Post-Sleep Cryo Config

For today's post-sleep cryo config, O2 and H2 tanks 1 and 4 will be active. Additionally, we are expecting to deplete H2 tank 4 today and you can expect real-time calls to reconfigure tanks following this depletion.

**R1 O2,H2 MANF VLV TK1 (two) - OP (tb-OP)**
**O2 TK1 HTR B - OFF**

Pre-Sleep Cryo Config

√MCC for deltas prior to configuring for pre-sleep.

For tonight's pre-sleep cryo config, manifold 1 will be closed with O2 tanks 1 and 5, and H2 tanks 1 and 3 active.

**A15 CRYO TK5 HTR O2 A - AUTO**

**A11 CRYO TK4 HTR O2 A - OFF**

**R1 O2,H2 MANF VLV TK1 (two) - CL (tb-CL)**

2. Crew Choice Downlink Opportunities

| | | | | |
|---|---|---|---|---|
| W | 07/23:55 | 08/00:29 | 34 | |
| W | 08/01:31 | 08/01:45 | 14 | |
| E | 08/02:09 | 08/02:20 | 11 | |

3. PDGF Keep Away Zones
   Before working or stowing EMUs in the crewlock, please verify PDGF areas of concern will be clear of EMU and inadvertent contact. Please use care when handling the PDGF. There are sharp edges on the curvic couplings, dry film lubricant on the grapple shaft, and the LEE grapple target is fragile. Reference MSG 085 (23-0668).

   NOTE: The PDGF will be accessed during ULF4 Tool Stow today (reference MSG 078 (23-0669)) and on FD10.

4. GAP Activation
   Piers, during Micro-2 GAP activation today, there may be condensation inside the CGBA and/or on the surfaces of the FPAs and/or GAPs. This is due to the CGBA temperature being set below the dewpoint of the cabin atmosphere and the humidity of the air when loading samples at KSC. If moisture due to condensation is present, it will be uniform on the GAPs and/or FPAs. If moisture is present because of a leak, please keep in mind these confirming cues:
   1. The moisture will be concentrated near a potential leak point (i.e. glass barrel seal or GAP o-ring).
   2. Damage to one or more glass barrels and/or glass barrel upper and lower seals.

5. SPINAL Operations
   Ken, for your Spinal Standing Height Log Setup in the middeck today, the Standing Height Log can be found in the manila envelope in the back of the AOP. TJ will setup the Seated Height hardware on the flight deck. There is no photo downlink requirement prior to data collection. All shuttle crew, Tracy, TJ, and Soichi are timelined for both Standing and Seated measurements; order of implementation is flexible. We have uplinked SPINAL Big Picture Words in MSG 80 for your reference.

6. GLACIER
   Steve, we have uplinked a new procedure for the DESCENT SAMPLE TRANSFER FROM MELFI TO GLACIER. Please refer to MSG 82 instead of the Assembly Operations version of the procedure.

7. ORCA
   All, ORCA will be running some of the time throughout FD9 and overnight into FD10. You will hear us cycling ORCA on/off to optimize the amount of gas transferred. Due to noise restrictions, no one can sleep in the ISS Airlock tonight. Thank you for your understanding.

8. REPLACE PAGES 2-28 THROUGH 2-33 AND 3-90 THROUGH 3-99.

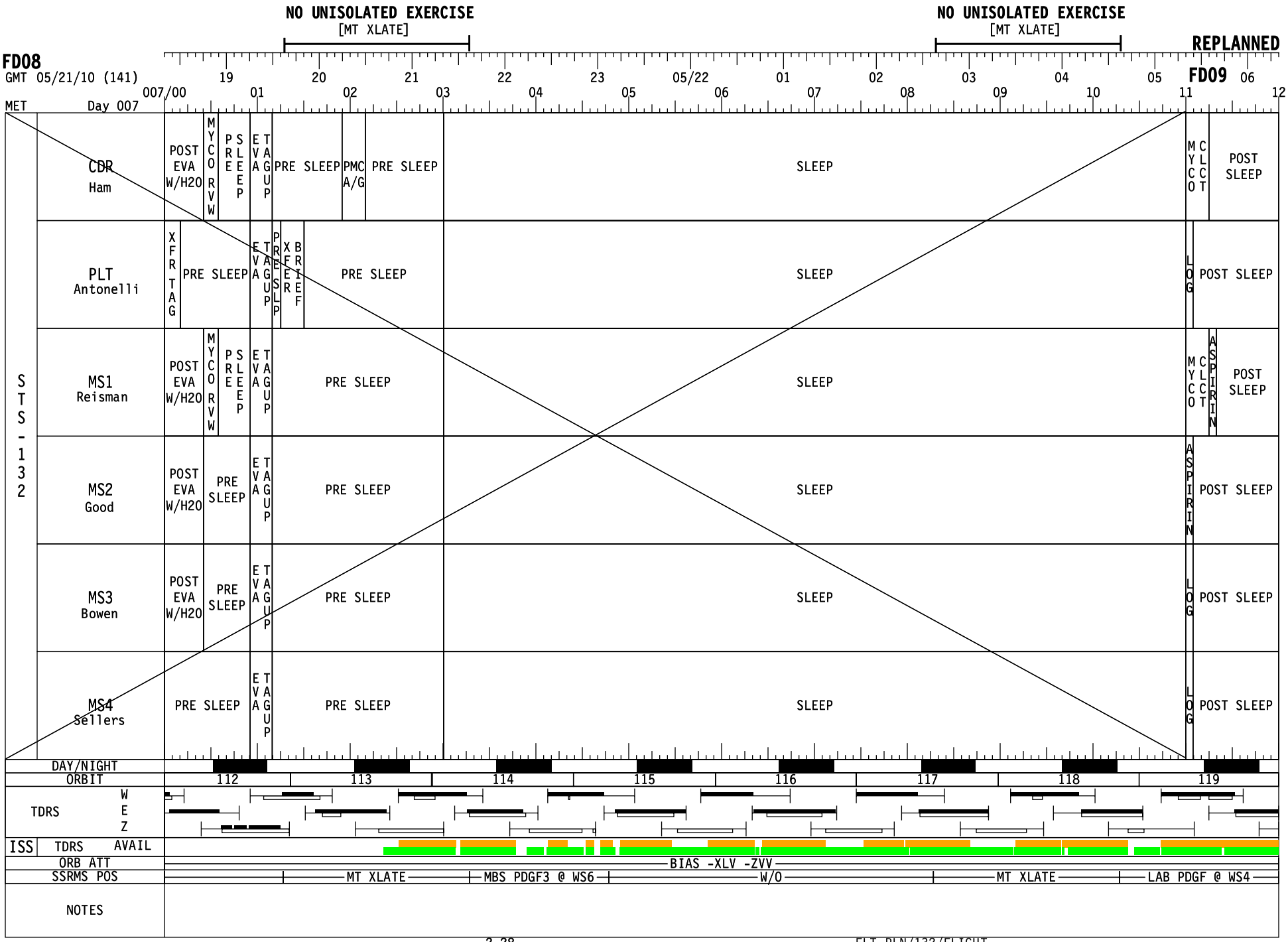
NO UNISOLATED EXERCISE
[MT XLATE]
NO UNISOLATED EXERCISE
[MT XLATE]
REPLANNED
FD08
GMT 05/21/10 (141)
FD09
MET
Day 007
007/00
19
20
21
22
23
05/22
01
02
03
04
05
06
07
08
09
10
11
12
STS-132
CDR Ham
POST EVA W/H2O
MYCO RVW
PRE SLEEP
EVA TAGUP
PRE SLEEP
PMC A/G
PRE SLEEP
SLEEP
MYCO
CLCT
POST SLEEP
PLT Antonelli
XFR TAG
PRE SLEEP
EVA TAGUP
PRESLP
XFER
BRIEF
PRE SLEEP
SLEEP
LOG
POST SLEEP
MS1 Reisman
POST EVA W/H2O
MYCO RVW
PRE SLEEP
EVA TAGUP
PRE SLEEP
SLEEP
MYCO
CLCT
ASPIRIN
POST SLEEP
MS2 Good
POST EVA W/H2O
PRE SLEEP
EVA TAGUP
PRE SLEEP
SLEEP
ASPIRIN
POST SLEEP
MS3 Bowen
POST EVA W/H2O
PRE SLEEP
EVA TAGUP
PRE SLEEP
SLEEP
LOG
POST SLEEP
MS4 Sellers
PRE SLEEP
EVA TAGUP
PRE SLEEP
SLEEP
LOG
POST SLEEP
DAY/NIGHT
ORBIT
112
113
114
115
116
117
118
119
TDRS
W
E
Z
ISS
TDRS AVAIL
ORB ATT
BIAS -XLV -ZVV
SSRMS POS
MT XLATE
MBS PDGF3 @ WS6
W/O
MT XLATE
LAB PDGF @ WS4
NOTES

**FD08**
GMT 05/21/10 (141)

NO UNISOLATED EXERCISE [MT XLATE]

NO UNISOLATED EXERCISE [MT XLATE]

**REPLANNED**

**FD09**

MET Day 007

007/00 19 20 21 22 23 05/22 01 02 03 04 05 06 07 08 09 10 11 12

ISS TDRS AVAIL

| | | | | | | | |
|---|---|---|---|---|---|---|---|
| ISS | ISS CDR Kotov | PW | DPC | 3KT5X | PRE SLEEP-ISS | SLEEP | POST SLEEP |
| ISS | FE-1 Skvortsov | TVIS | DPC | | PRE SLEEP-ISS | SLEEP | POST SLEEP |
| ISS | FE-2 Caldwell-Dyson | MYCO* | DPC | | PRE SLEEP-ISS | SLEEP | MYCO COLLECT / MYCO INS / POST SLEEP |
| ISS | FE-3 Kornienko | PW | DPC | | PRE SLEEP-ISS | SLEEP | 3KT5X / POST SLEEP |
| ISS | FE-5 Noguchi | T2 | DPC | MPC | PRE SLEEP-ISS / MPC | SLEEP | POST SLEEP |
| ISS | FE-6 Creamer | VDSCAP | DPC | IMAGE | PRE SLEEP-ISS | SLEEP | POST SLEEP |

DAY/NIGHT

ORBIT: 112 | 113 | 114 | 115 | 116 | 117 | 118 | 119

SSRMS POS: MT XLATE | MBS PDGF3 @ WS6 | W/O | MT XLATE | LAB PDGF @ WS4

ALL VHF

NOTES: *REVIEW

4

**REPLANNED**

**FD09**
GMT 05/22/10 (142)

MET Day 007

12 13 14 15 16 17 18 19 20 21 22 23 008/00
07 08 09 10 11 12 13 14 15 16 17 18

STS-132

| | |
|---|---|
| CDR Spam | POST SLEEP; MCIU%; STDS/U; STAND; SPINAL; SUBJ; IMU; RMS MNVR; UNDOCK; CWC INIT #3; EXERCISE; CWC TERM; CWC XFER; PAO; MEAL; MDDK XFER; N2 XFER TERM; MDDK XFER; OFF DUTY; PRE SLEEP |
| PLT Rigatoni | POST SLEEP; XFER; UPDATE; PRLA^; EXERCISE; DAP U/D; RMS MNVR; UNDOCK; O2 XFER RECONFIG; O2-INIT; PAO; MEAL; CWC INIT #4; MDDK XFER; CWC TERM; CWC XFER; STAND; SPINAL; SUBJ; OFF DUTY; PRE; SLEEP; XFER GRUP |
| MS1 Astronaut Jones | POST SLEEP; SSRMS ICC BERTH PLB; SSRMS; MNVR*; STAND; SPINAL; SUBJ; PAO; MEAL; EXERCISE; OFF DUTY; PRE SLEEP |
| MS2 The Good,the Bad & the Ugly | POST SLEEP; PTV6 S/U; POST; SLEEP; EXERCISE; EVA PRP XFR TO STS; EVA XFER TO STS; PTV6 DCT; SPINAL; SUBJ; STAND; PAO; MEAL; P/TV09; SETUP; P/TV09; GLACIER; MDDK XFER; OFF DUTY; PRE SLEEP |
| MS3 Bowen Arrow | POST SLEEP; GLCR REC; SPNL; SUBJ; STAND; EVA PRP XFR TO STS; EVA XFER TO STS; PAO; MEAL; SMP XFR; REVIEW; MLAF/GLC; SAFE PRLE XFER; EXERCISE; GLCR REC; OFF DUTY; PRE SLEEP |
| MS4 Dr. Strangelove | POST SLEEP; SSRMS ICC BERTH PLB; SSRMS; MNVR*; MDK#; EXERCISE; PAO; MEAL; MICRO-2 ACT; MICRO-2&; SPNL; SUBJ; STAND; OFF DUTY; MDK#; PRE SLEEP |

DAY/NIGHT

ORBIT: 120 121 122 123 124 125 126 127

TDRS W E Z

ISS TDRS AVAIL

ORB ATT: BIAS -XLV -ZVV

SSRMS POS: LAB PDGF @ WS4

NOTES: %FILTER CK #STATUS CHECK ^CLOSE *UNDOCK &TEMP CHANGE #STATUS CHECK

**REPLANNED**

**FD09**
GMT 05/22/10 (142)
MET Day 007

12 07 08 09 10 11 12 13 14 15 16 17 18 19 20 21 22 23 008/00

ISS TDRS AVAIL

| | | | | | | | | | | | | | | | | | | | | | | | | | |
|---|---|---|---|---|---|---|---|---|---|---|---|---|---|---|---|---|---|---|---|---|---|---|---|---|---|
| ISS | ISS CDR Kotov | POST SLEEP | DPC | PW | МБИ-15-NEJRO-CDR | | | | | TVIS | | | MIDDAY-MEAL | ГРО-SYMBOLIC | | STOW PREP | | | TVIS | | | | | DPC |
| ISS | FE-1 Skvortsov | POST SLEEP | DPC | ТВUCK | PW | | TVIS | | M2-CB-ПФ B1-B2-MNT | | | ARED | IFM TVIS INSP | MIDDAY-MEAL | ГРО-SYMBOLIC | M1-IMS-XFER | | | | C1-CB-ПФ B1-B2-MNTN | CB-E MNT | TEX-15 | | DPC |
| ISS | FE-2 Caldwell-Dyson | POST SLEEP | DPC | POST SLEEP | CWC PT1 | | CWC PT2 | | SPINAL OPR | STAND SPINAL SUBJ | T2 | RWS | S/U | PREP | PAO | MIDDAY-MEAL | DEACT | ГРО SYMBOLIC | SPINAL OPR | ARED | | EVA-TOOL-STOW | | VDSCAP | DPC |
| ISS | FE-3 Kornienko | POST SLEEP | DPC | PW | СОЖ | МБИ-15 МНLP | ИП-1 MNT | МБИ-10 МРНОТО5 | ГРО SYMBOLIC | TVIS | | VELO | | MIDDAY-MEAL | ГРО-SYMBOLIC | M1-IMS-XFER | | | | M1 CB ВД1 INSTL | PFC | ПОТОК | ЭЛКТ БЖ | КПТ2-INI | DPC |
| | FE-5 Noguchi | POST SLEEP | DPC | P/TV-A | PW | ARED | | | SPINAL OPR | O2 XFER RECONFIG | O2-INIT | SPINAL OPR | STAND SPINAL SUBJ | MIDDAY-MEAL | ГРО-SYMBOLIC | N2 XFER TERM | P/TV-D | SPINAL OPR | | DPART PREP | | JRMS | T2 | | DPC |
| | FE-6 Creamer | POST SLEEP | DPC | PW | SPINAL S/U | | SPINAL OPR | STAND SPINAL SUBJ | | EVA CAM RCNFG | DPART PREP | | SPINAL OPR | MIDDAY-MEAL | SMP XFR REVIEW | MSLF/GLC XAFMPRLE | ГРО SYMBOLIC | | T2 | | SPINAL STOW | ARED | | | DPC |

| | |
|---|---|
| DAY/NIGHT | |
| ORBIT | 120 121 122 123 124 125 126 127 |
| SSRMS POS | LAB PDGF @ WS4 |
| ALL VHF | |
| NOTES | |

**REPLANNED**

**FD09**

GMT 05/22/10 (142)

MET Day 008

| | | 008/00 | 19 | 20 | 21 | 22 | 23 | 05/23 | 01 | 02 | 03 | 04 | 05 | 06 |
|---|---|---|---|---|---|---|---|---|---|---|---|---|---|---|
| STS-132 | CDR Spam | PRE SLEEP | PMC A/G | PRE SLEEP | SLEEP | | | | | | | | | POST SLEEP |
| | PLT Rigatoni | XFER BREF | PRE SLEEP | | SLEEP | | | | | | | | LOG | POST SLEEP |
| | MS1 Astronaut Jones | PRE SLEEP | | | SLEEP | | | | | | | | LOG | POST SLEEP |
| | MS2 The Good,the Bad & the Ugly | PRE SLEEP | | | SLEEP | | | | | | | | | POST SLEEP |
| | MS3 Bowen Arrow | PRE SLEEP | | | SLEEP | | | | | | | | LOG | POST SLEEP |
| | MS4 Dr. Strangelove | PRE SLEEP | | | SLEEP | | | | | | | | LOG | POST SLEEP |
| DAY/NIGHT | | | | | | | | | | | | | | |
| ORBIT | | | 128 | 129 | 130 | 131 | 132 | | 133 | | 134 | | | 135 |
| TDRS | W | | | | | | | | | | | | | |
| | E | | | | | | | | | | | | | |
| | Z | | | | | | | | | | | | | |
| ISS TDRS AVAIL | | | | | | | | | | | | | | |
| ORB ATT | | BIAS -XLV -ZVV | | | | | | | | | | | | |
| SSRMS POS | | LAB PDGF @ WS4 | | | | | | | | | | | | |
| NOTES | | | | | | | | | | | | | | |

**REPLANNED**

**FD09**

GMT 05/22/10 (142)

MET Day 008

| ISS | TDRS AVAIL | 008/00 | 19 | 20 | 21 | 22 | 23 | 05/23 | 01 | 02 | 03 | 04 | 05 | 06 | 12 |
|---|---|---|---|---|---|---|---|---|---|---|---|---|---|---|---|

| | | | | | |
|---|---|---|---|---|---|
| ISS | ISS CDR Kotov | PRE SLEEP-ISS | SLEEP | ЭЛКТБЖ | POST SLEEP |
| ISS | FE-1 Skvortsov | PRE SLEEP-ISS | SLEEP | | POST SLEEP TBUCK |
| ISS | FE-2 Caldwell-Dyson | PRE SLEEP-ISS; PFC; PRE SLEEP ISS | SLEEP | | POST SLEEP |
| ISS | FE-3 Kornienko | PRE SLEEP-ISS | SLEEP | | POST SLEEP |
| ISS | FE-5 Noguchi | MPC; PRE SLEEP-ISS; MPC | SLEEP | BISP | ARED |
| ISS | FE-6 Creamer | PRE SLEEP-ISS | SLEEP | | POST SLEEP |

| | |
|---|---|
| DAY/NIGHT | |
| ORBIT | 128 129 130 131 132 133 134 135 |
| SSRMS POS | LAB PDGF @ WS4 |
| ALL VHF | |
| NOTES | |

# STS-132 FD (08)

**REPLANNED**

GMT Date 05/22 (142) | W | TDRSE | Z | D/N | DORB 13 | DORB 14 | DORB 15 | ORB 117 | ORB 118 | ORB 119 | MET Day 007 | STS ATI | CDR SPAM | PLT RIGATONI | MS1 ASTRONAUT JONES | NOTES

08:00 — 09:00 — 10:00 — 11:00 — 12:00

03:00 — 04:00 — 05:00 — 06:00

BIAS -XLV -ZVV

SLEEP (CDR SPAM)

SLEEP (PLT RIGATONI)

SLEEP (MS1 ASTRONAUT JONES)

**FD09 EZ ACTIVITIES:**
- √OCAC FILTER
- √MDDK DUCT SCREEN
- TEPC (STATUS CHECK) (ORB OPS, CREW SYS)
- HARD REBOOT ALL PGSCs EXCEPT: STS-1(OCA ROUTER), STS-6(WLES) & STS-5(RPOP2)

MYCO BODY SAMPLE CLLCT(ASSY OPS,PAYLOADS)
At Step 6.1, Hand Myco Kit to FE-2 for MELFI Insert

POST-SLEEP ACTIVITY (ORB OPS, CREW SYS)

√Hum Seps for H2O Accumulation

SLEEP LOGBOOK (SDBI 1634)

POST-SLEEP ACTIVITY (ORB OPS, CREW SYS)

MYCO BODY SAMPLE CLLCT(ASSY OPS,PAYLOADS)
At Step 6.1, Hand Myco Kit to FE-2 for MELFI Insert

EVA CREW: TAKE 1 ASPIRIN (325mg)

POST-SLEEP ACTIVITY (ORB OPS, CREW SYS)

# STS-132 FD (08)

**REPLANNED**

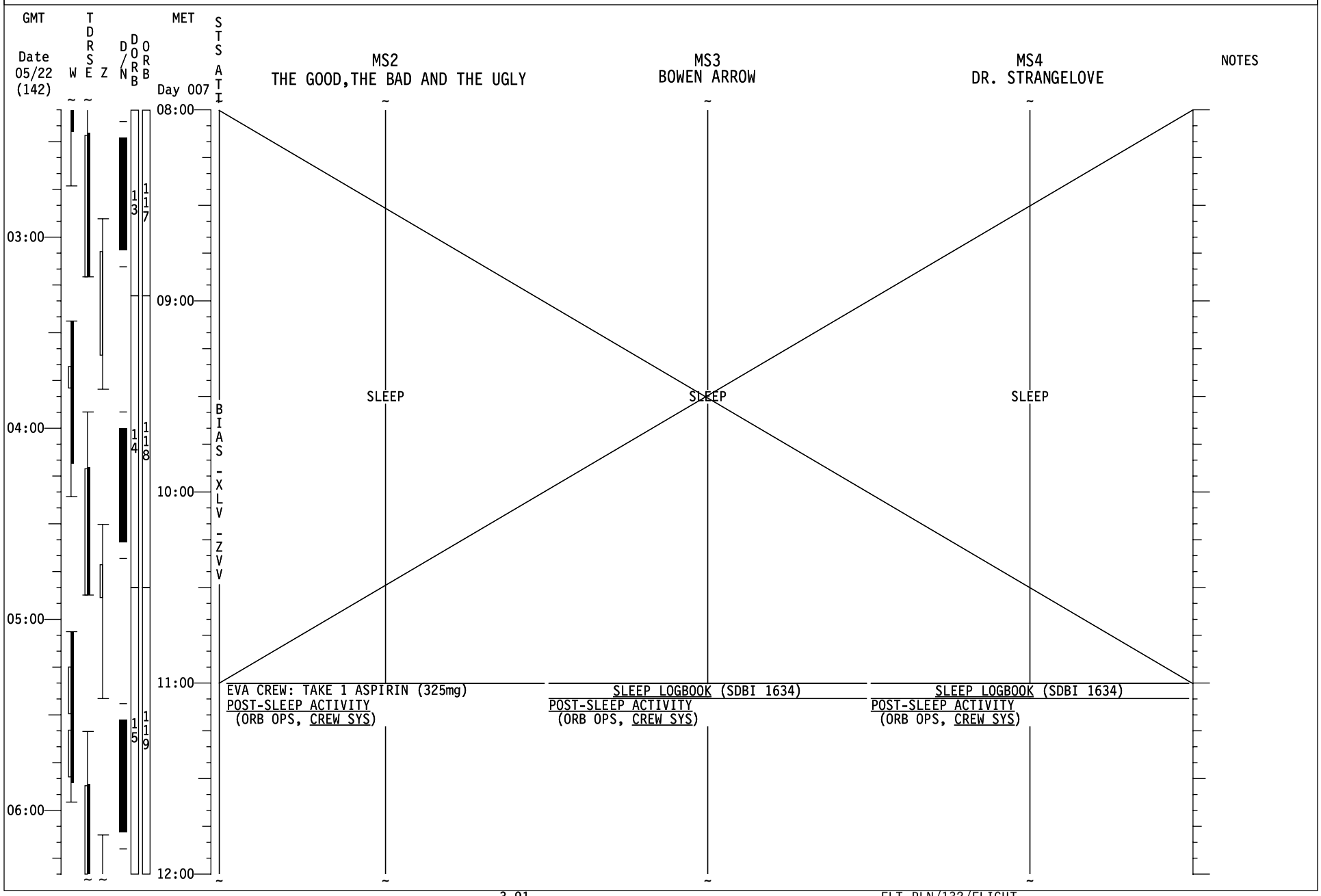

# STS-132 FD (09)

**REPLANNED**

GMT Date 05/22 (142) | W | TDRSE | Z | D/N | DORB | ORB | MET Day 007 | STS ATT

| CDR SPAM | PLT RIGATONI | MS1 ASTRONAUT JONES | NOTES |
|---|---|---|---|
| POST-SLEEP ACTIVITY (ORB OPS, CREW SYS) | POST-SLEEP ACTIVITY (ORB OPS, CREW SYS) | POST-SLEEP ACTIVITY (ORB OPS, CREW SYS) | |
| √Hum Seps for H2O Accumulation | | | |
| | | ROBO: 2.401 ICC TRANSFER TO PLB Steps 1-15 | |
| | DAILY TRANSFER LIST UPDATE Ref. Transfer List & MSG 077 | | |
| L17 Check MCIU filter screen | | | |
| SPINAL ELONGATION STND HEIGHT LOG (ASSY OPS,PAYLOADS)Setup, Step 1 Ref. MSG 074, Item 5 | ROBO: 2.401 ICC TRANSFER TO PLB Steps 9-14 | | |
| SPINAL STANDING HEIGHT SUBJECT | | | |
| SPINAL ELONGATION CREW DATA COLLECT | EXERCISE | ROBO: 2.401 ICC TRANSFER TO PLB Step 16 | |
| IMU STAR OF OPPTY ALIGN (ORB OPS, GNC) | | | |
| | | A √A12/FREE/VERN DAP PERMANENT EDIT: A12: VERN ROT RATE = 0.1 | |
| | FOLLOWING ICC RETURN TO PLB: A | | |
| MNVR TO OBSS UNDOCK (PDRS, OBSS NOMINAL) | MNVR TO OBSS UNDOCK (PDRS, OBSS NOMINAL) | | |
| SHUTTLE/ISS H2O CNTR FILL (ORB OPS, ECLS) Init Fill #3 Ref. MSG 016 | JOINT OPS: 3.123 O2 TRANSFER SETUP (POST PREBREATHE USING SHUTTLE O2) Steps 2-5.7 MCC-H will perform steps 2.5 & 2.6 | | |
| EXERCISE | | | |

Time scale: 07:00, 08:00, 09:00, 10:00; Day 007: 12:00, 13:00, 14:00, 15:00, 16:00

STS ATT: BIAS-XLV-ZVV

DORB: 16, 120, 1, 121, 2, 122

# STS-132 FD (09)

**REPLANNED**

GMT Date 05/22 (142) | W | TDRSE | Z | D/N | DORB | ORB | MET Day 007 | STS ATT

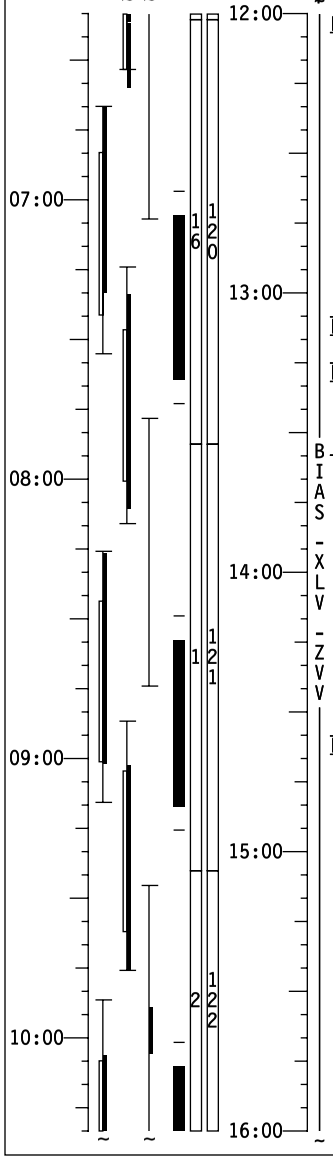


## MS2 THE GOOD, THE BAD AND THE UGLY

POST-SLEEP ACTIVITY
(ORB OPS, CREW SYS)

P/TV06 ROBOTICS OPERATIONS
(PHOTO/TV, SCENES) SETUP

POST-SLEEP ACTIVITY
(ORB OPS, CREW SYS)

EXERCISE

EVA PREP FOR XFER TO STS
Ref. MSG 079

## MS3 BOWEN ARROW

POST-SLEEP ACTIVITY
(ORB OPS, CREW SYS)

GLACIER COLD HEAD CHECK(ASSY OPS,PAYLOADS)

SPINAL ELONGATION CREW DATA COLLECT

SPINAL STANDING HEIGHT SUBJECT

EVA PREP FOR XFER TO STS
Ref. MSG 079

## MS4 DR. STRANGELOVE

POST-SLEEP ACTIVITY
(ORB OPS, CREW SYS)

ROBO: 2.401 ICC TRANSFER TO PLB
Steps 1-15

ROBO: 2.401 ICC TRANSFER TO PLB
Step 16

CGBA STATUS CHECK (Cue Card)

EXERCISE

NOTES

# STS-132 FD (09)

**REPLANNED**

GMT Date 05/22 (142) | W | TDRSE | Z | D/N | DORB | ORB | MET Day 007 | STS ATT

| CDR SPAM | PLT RIGATONI | MS1 ASTRONAUT JONES | NOTES |
|---|---|---|---|
| EXERCISE | JOINT OPS: 3.123 O2 TRANSFER SETUP (POST PREBREATHE USING SHUTTLE O2) Steps 2-5.7 MCC-H will perform steps 2.5 & 2.6 | | |
| | JOINT OPS: 3.128 O2 TRANSFER TO HI P AND LO P O2 TANKS (Init) Step 2 | | |
| | | SPINAL STANDING HEIGHT SUBJECT | |
| | | SPINAL ELONGATION CREW DATA COLLECT | |
| SHUTTLE/ISS H2O CNTR FILL (ORB OPS, ECLS) Perform FILL TERMINATION | | | |
| CWC TRANSFER Transfer 1 CWC to ISS | | | |
| PUBLIC AFFAIRS EVENT ISS KU AVAIL: 17:09-17:45 Ref. MSG 083 | PUBLIC AFFAIRS EVENT ISS KU AVAIL: 17:09-17:45 Ref. MSG 083 | PUBLIC AFFAIRS EVENT ISS KU AVAIL: 17:09-17:45 Ref. MSG 083 | |
| MEAL | MEAL | MEAL | |
| TRANSFER OPS Ref. Middeck Transfer List & MSG 077 | SHUTTLE/ISS H2O CNTR FILL (ORB OPS, ECLS) Init Fill #4 Ref. MSG 016 | | |
| | TRANSFER OPS Ref. Middeck Transfer List & MSG 077 | | |
| | | EXERCISE | |
| JOINT OPS: 3.103 NITROGEN TRANSFER TERM Steps 3-5 MCC-H will perform steps 5.2-5.3 | | | |
| | SHUTTLE/ISS H2O CNTR FILL (ORB OPS,ECLS)Perform FILL TERMINATION | | |

Time scale: 11:00, 12:00, 13:00, 14:00; MET: 16:00, 17:00, 18:00, 19:00, 20:00

STS ATT: BIAS - XLV - ZVV

DORB: 2, 3, 4, 5; ORB: 122, 123, 124, 125

# STS-132 FD (09)

**REPLANNED**

GMT Date 05/22 (142) | W | TDRSE | Z | D/N | DORB | ORB | MET Day 007 | STS ATT

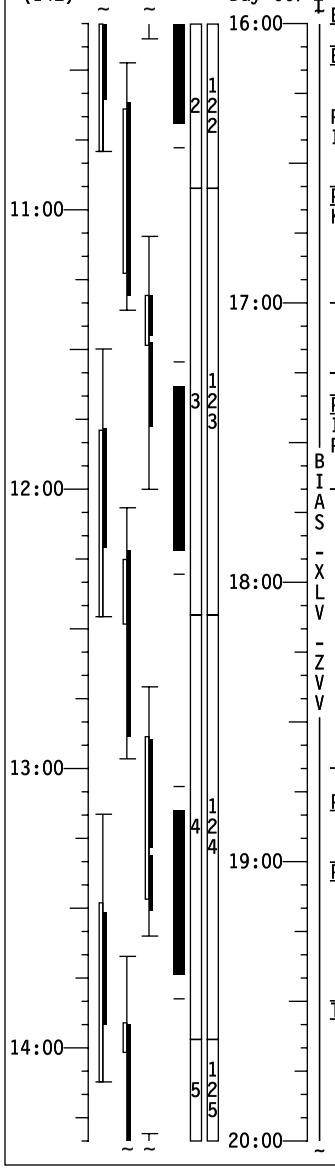


## MS2 THE GOOD, THE BAD AND THE UGLY

EVA PREP FOR XFER TO STS
Ref. MSG 079

EVA TRANSFER TO STS
(EVA, AIRLOCK CONFIG)

Ref. Transfer List:
Items 701,714-719 & 737

P/TV06 ROBOTICS OPERATIONS
KEEL PWR - OFF
√ILL PWR - ON

SPINAL ELONGATION CREW DATA COLLECT

SPINAL STANDING HEIGHT SUBJECT

PUBLIC AFFAIRS EVENT
ISS KU AVAIL: 17:09-17:45
Ref. MSG 083

MEAL

P/TV09 GLACIER
(PHOTO/TV, SCENES)
Setup

P/TV09 GLACIER
(PHOTO/TV, SCENES)
Ops

TRANSFER OPS
Ref. Middeck Transfer List & MSG 077

## MS3 BOWEN ARROW

EVA PREP FOR XFER TO STS
Ref. MSG 079

EVA TRANSFER TO STS
(EVA, AIRLOCK CONFIG)

Ref. Transfer List:
Items 701,714-719 & 737

PUBLIC AFFAIRS EVENT
ISS KU AVAIL: 17:09-17:45
Ref. MSG 083

MEAL

SAMPLE TRANSFER REVIEW
Ref. MSG 082

DESCENT SAMPLE TRANSFER FROM MELFI TO GLACIER
Ref. MSG 082
Ref. Transfer List: Item 726

EXERCISE

## MS4 DR. STRANGELOVE

EXERCISE

PUBLIC AFFAIRS EVENT
ISS KU AVAIL: 17:09-17:45
Ref. MSG 083

MEAL

GAP ACTIVATION
(ASSY OPS, PAYLOADS)
Activate MICRO GAPS M1-M16
Ref. MSG 074, Item 4

NOTES

# STS-132 FD (09)

**REPLANNED**

GMT Date 05/22 (142) | W | TDRSE | Z | D/N | DORB | ORB | MET Day 007 | STS ATT

| CDR SPAM | PLT RIGATONI | MS1 ASTRONAUT JONES | NOTES |
|---|---|---|---|
| JOINT OPS: 3.103 NITROGEN TRANSFER TERM<br>Steps 3-5<br>MCC-H will perform steps 5.2-5.3 | SHUTTLE/ISS H2O CNTR FILL<br>(ORB OPS,ECLS)Perform FILL TERMINATION | EXERCISE | |
| TRANSFER OPS<br>Ref. Middeck Transfer List & MSG 077 | CWC TRANSFER<br>Transfer 1 CWC to ISS | | |
| | SPINAL STANDING HEIGHT SUBJECT | | |
| | SPINAL ELONGATION CREW DATA COLLECT | | |
| OFF DUTY | OFF DUTY | OFF DUTY | |
| PRE-SLEEP ACTIVITY<br>(ORB OPS, CREW SYS) | PRE-SLEEP ACTIVITY<br>(ORB OPS, CREW SYS) | PRE-SLEEP ACTIVITY<br>(ORB OPS, CREW SYS) | |
| | TRANSFER TAGUP<br>Coordinate with transfer counterpart | | |

Time scale: 15:00, 16:00, 17:00, 18:00; Day 007: 20:00, 21:00, 22:00, 23:00, 00:00

Orbits: 5, 6, 7; 125, 126, 127

BIAS - XLV - ZVV

# STS-132 FD (09)

**REPLANNED**

GMT Date 05/22 (142) | W | TDRS E | Z | D/N | DORB 5 6 7 | ORB 125 126 127 | MET Day 007 | STS ATT

MS2 THE GOOD,THE BAD AND THE UGLY | MS3 BOWEN ARROW | MS4 DR. STRANGELOVE | NOTES

20:00

TRANSFER OPS
Ref. Middeck Transfer List & MSG 077

CGBA ADJUST SET TEMP (ASSY OPS, PAYLOADS)
CGBA set point changes from 8° to 37° C

SPINAL ELONGATION CREW DATA COLLECT

EXERCISE

SPINAL STANDING HEIGHT SUBJECT

15:00

GLACIER COLD HEAD CHECK(ASSY OPS,PAYLOADS)

21:00

16:00

BIAS -XLV -ZVV

22:00

OFF DUTY | OFF DUTY | OFF DUTY

17:00

23:00

PRE-SLEEP ACTIVITY
(ORB OPS, CREW SYS)

PRE-SLEEP ACTIVITY
(ORB OPS, CREW SYS)

GLACIER STATUS CHECK (Cue Card)
CGBA STATUS CHECK (Cue Card)
PRE-SLEEP ACTIVITY
(ORB OPS, CREW SYS)

18:00

00:00

# STS-132 FD (09)

**REPLANNED**

GMT Date 05/22 (142) | W | TDRSE | Z | D/N | DORB | ORB | MET Day 008 | STS ATT

| CDR SPAM | PLT RIGATONI | MS1 ASTRONAUT JONES | NOTES |
|---|---|---|---|
| PRE-SLEEP ACTIVITY (ORB OPS, CREW SYS) | TRANSFER BRIEF Call down status to MCC | PRE-SLEEP ACTIVITY (ORB OPS, CREW SYS) | |
| | PRE-SLEEP ACTIVITY (ORB OPS, CREW SYS) | | |
| PRIVATE MEDICAL CONFERENCE L9 PAYLOAD STATION AUDIO A/G (two)-OFF Perform via A/G2 | | | |
| PRE-SLEEP ACTIVITY (ORB OPS, CREW SYS) Air Quality Report | | | |
| | **WAKE UP AT 8/10:30** | | |
| SLEEP | SLEEP | SLEEP | |

Time scale: 19:00, 20:00, 21:00, 22:00; 00:00, 01:00, 02:00, 03:00, 04:00

DORB: 7, 8, 9, 10; ORB: 128, 129, 130

STS ATT: BIAS-XLV-ZVV

# STS-132 FD (09)

**REPLANNED**

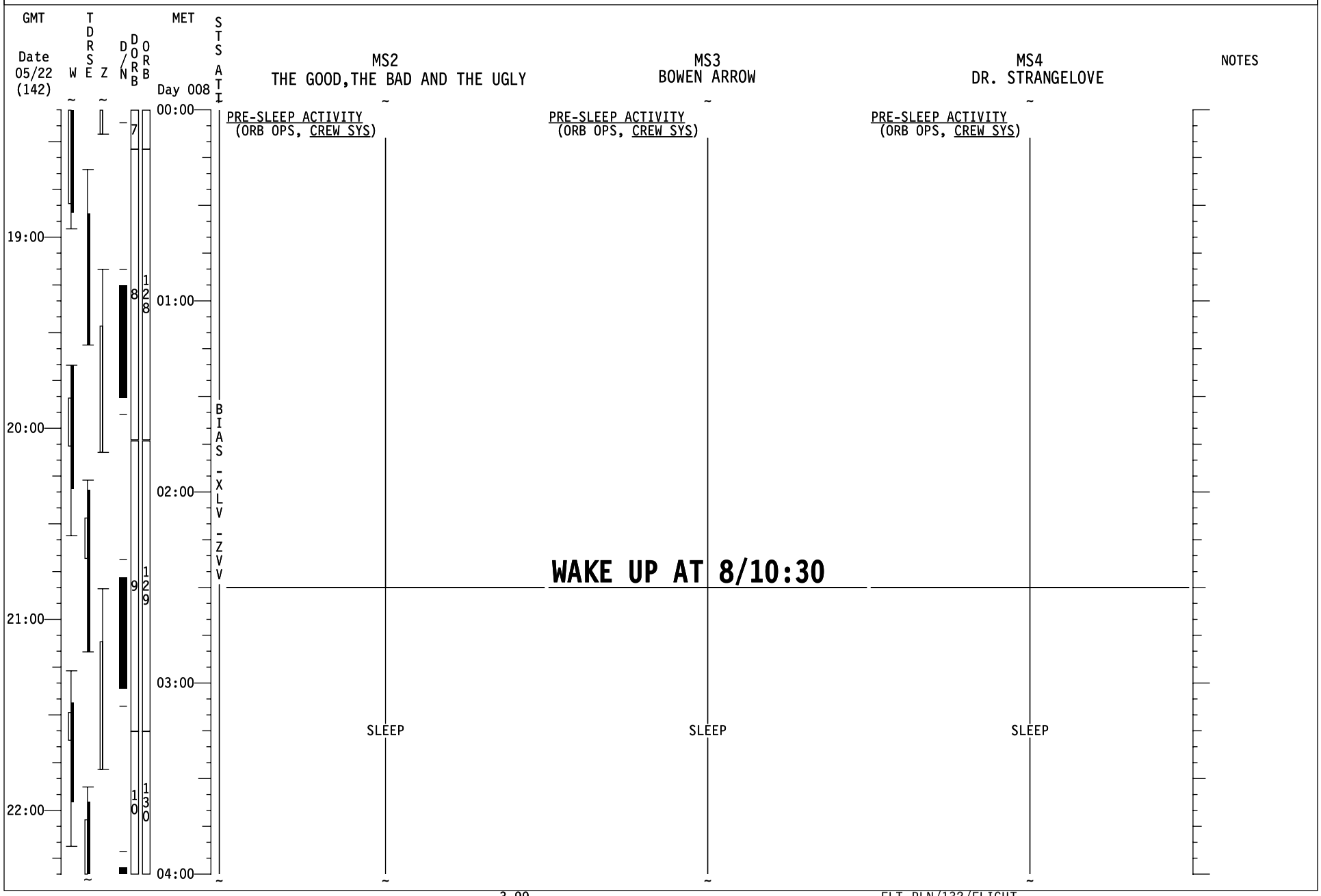

MSG 075 - FD09 MISSION SUMMARY

Good Morning Atlantis!!!!

EVA 3 was awesome!!!!!  Thanks to all of you for your great effort!

Enjoy your last day docked to station!!!!

YOUR CURRENT ORBIT IS: 191 X 183 NM

NOTAMS - (TWO CHANGES: DELETED YHZ, ADDED KBO)

| | |
|---|---|
| EDW - | EDW 22L/04R IN USE.  EDT 22R/04L CLOSED FOR CONSTRUCTION. |
| EDW - | LAKEBED RWYS 15/33 GREEN. 18L RED. |
| NOR - | LAKEBED RWYS GREEN. |
| NTU - | RWY 05R/23L CLSD. |
| FOK - | CLOSED. |
| FMH - | RWY 23 APCH LTS OTS. |
| EDF - | TACAN EDF81 OTS. |
| YYT - | TACAN UYT23 AZIMUTH OTS. |
| KBO - | TACAN DOR23Y DME OTS. |
| AMB - | RWY 15/33 REQUIRES 30MIN PN TO CLEAR WIP. |
| PTN - | CLSD. |
| IKF - | NOT USABLE.  NO AGREEMENT. |
| BEN - | NOT RECOMMENDED/NOT SUPPORTED. |

<u>NEXT 2 PLS OPPORTUNITIES:</u>

| | | | | |
|---|---|---|---|---|
| KSC15 | ORB124 – 7/18:57 | SCT030 | 7 | 060/08P13 |
| NOR17 | ORB141 – 8/20:53 | SKC | 7 | 180/10P15 |

<u>OMS TANK FAIL CAPABILITY:</u>

L or R OMS FAILS:  NO

<u>LEAKING OMS PRPLT BURN:</u>

L or R OMS LEAK:  ALWAYS BURN RETROGRADE

<u>OMS QUANTITIES(%)</u>

| | | | |
|---|---|---|---|
| L OMS | OX = 36.77 | R OMS | OX = 37.23 |
| | FU = 36.79 | | FU = 36.89 |

FOR CURRENT QTYS, SUBTRACT INCN’T COUNTER

END OF PAGE 1 OF 2, MSG 075

DELTA V AVAILABLE:

| | |
|---|---|
| OMS | 392 FPS |
| ARCS (TOTAL ABOVE QTY1) | 40 FPS |
| TOTAL IN THE AFT | 432 FPS |
| ARCS (TOTAL ABOVE QTY2) | 73 FPS |
| FRCS (ABOVE QTY 1) | 37 FPS |
| AFT QTY 1 | 84 % |
| AFT QTY 2 | 46 % |

| SYSTEM | FAILURE | IMPACT | WORK AROUND |
|---|---|---|---|
| PGSC | Broken (cracked) display on STS4 (RPOP) PGSC | Crew will not be able to utilize the PGSC for operations requiring the display. | Use STS5 (RPOP2) as prime laptop for running RPOP and DOUG s/w during undock & late inspection.<br><br>If desired, configure STS6 (WLES) as backup RPOP during undock. |

END OF PAGE 2 OF 2, MSG 075

STS-132/ULF4 FD08 - MMT Summary

The MMT met briefly today to review the orbiter systems and mission progress.

Atlantis continues to perform well with no new anomalies reported since the MMT yesterday.

The MMT was all smiles today and very pleased with the success of the 3 EVAs completed during the mission. A testament of all the great planning and hard work put in by the combined teams.

Good morning Ken and Tony,

You are 79% complete with transfer and doing a great job.

Today you'll notice quite a few items added to your return plan. This should take care of most of the open volume, and prevent any major transfer list changes on hatch close day (knock on wood!).

The Transfer List Excel file, FD09_Transfer_List_STS132.xls, is located on the KFX machine in **C:\OCA-up\transfer.**

For ISS, the Transfer List Excel file, FD09_Transfer_List_STS132.xls, is located in **K:\OCA-up\transfer.**

**Transfer Questions/Comments**

1.) You should have an updated Bag I return layout included as part of your cabin stow message.

2.) Ken – Regarding the ISS Trash foam – Della is looking for some foam to fill out Bag E and the Seat 7 Bag to keep the contents from shifting. Bag E is mass limited, so non-nomexed foam would be preferable. Let us know what you find.

3.) Today Alex will be doing a TVIS IFM. If debris is found he will put a sample in a ziplock bag and give it to you for return. This item has been added to the transfer list as item 920.

**FD09 Transfer Choreography:**

- Mike and Steve: Transfer EVA h/w to Shuttle per EVA XFER TO STS activity (Items 701, 714-719, and 737)
- Steve: Transfer samples per MLF/GLC SAMPLE XFER (Item 726)
- MDDK XFER:
    - Transfer return TVIS sample after IFM-TVIS-INSPECT activity (Item 920)
    - Transfer commemorative items after SYMBOLIC activity (Item 900 and 905)
    - Continue return transfers

**Change Pages:**
**Please incorporate changes as follows:**

In the Transfer List **RETURN** tab
Replace the following pages:
Return Page – 3, 5, 10

In the Transfer List **RETURN** tab
Add the following pages:
Return Page – 11

**FD10 Transfer Choreography:**

- Piers: Transfer SSC back to ISS per SSC RETURN activity (Item 730)
- Tracy: Transfer returning DCBs on time per DCB XFER (Items 710, 711, and 712)
- T.J.: Transfer returning ECCO bag on time per ECCO XFER (713)
- XFER OPS:
    - Return Bose headphones and integrated cable to ISS (Items 909 and 910)
    - Complete all remaining transfer!

Let us know if you have any questions!
- The ULF4 Transfer Team

# 23-0669 (MSG 078) ULF4 TOOL RESTOW



OVERVIEW: This message is designed to restow the tools deployed for the ULF4 EVAs. This message is ordered in a way that it unpacks each bag at a time. However, the message is also color coded so you can easily stow items based on their final location. All items that are Blue are going into the same CTB so you can quickly scan through the list and find all the items going to the same location. This is the first time in a while that you have done a complete restow so we are concerned about the volume of items going inside CTB 1161. Therefore we are going to have you gather all the round and square scoops from both this tool config and out of CTB 1161 and then stow them in a mesh bag. Then once the crewlock bags are empty you can stow the mesh bag of scoops inside Crewlock Bag #4.

PROCEDURE:

1. **CONFIRM** that there is a D-Ring Extender on A/L D-Ring.
2. **RETRIEVE** damaged RETs; RET w/ PIP Pin s/n 4238 and Lg-sm RET 4262. Take photos. Stow in ziplock marked "**Check MCC prior to use**". **REPORT** location.
3. **REMOVE** all tethers, fish stringers, and D-ring extenders from all bags, MWS and suits (including ISS suit 3009) and STOW them on the tether staging area.
4. **STOW** any wire ties you consider re-usable in the ziplock at A/L1O0.
5. **RETRIEVE** an empty mesh bag and label it, "Scoops"
6. **COMPLETE** Tables A - L.
7. **REMOVE** any labels from Crewlock Bags and mesh bags.
8. **REPORT** to **MCC-H** when activity is complete, the requested S/N information, and any deltas.

24 For help identifying the correct S/N's, reference 2.220.100 EVA TOOL SERIAL NUMBER REFERENCE (SODF: EVA TASK: TOOLS: TOOL REFERENCE)

**Table A: Retrieve the Following Bags**

| Item # | ☑ | Location | Item | QTY | P/N | S/N | B/C | Final Location | Notes |
|---|---|---|---|---|---|---|---|---|---|
| 1 | | **NOD1P2** | Mesh Bag: EVA Future Return/Trash | 1 | - | - | - | **NOD1P2** | Keep these bag deployed until all tools have been restowed.<br><br>Use color of text to quickly find the items below that go into each bag. |
| 2 | | **A/L1D2** | 1.0 CTB: Unique EVA Tools | 1 | SEG33111838-307 | 1022 | 002317J | **A/L1D2** | |
| 3 | | **A/L1O0** | 1.0 CTB: EVA Miscellaneous Tools #1 | 1 | SEG33111838-307 | 1075 | 004069J | **A/L1O0** | |
| 4 | | | 1.0 CTB: EVA Miscellaneous Tools #2 | 1 | SEG33111838-307 | 1161 | 004155J | **A/L1O0** | |
| 5 | | | 1.0 CTB: MWS Hardware | 1 | SEG33111838-307 | 1013 | 002308J | **A/L1O0** | |

**Table B: Deconfigure EV1 MWS**

| Item # | ☑ | Location | Item | QTY | P/N | S/N | B/C | Final Location | Notes |
|---|---|---|---|---|---|---|---|---|---|
| 6 | | **A/L Deployed** (on overhead Single-Strap per prep xfer to shuttle) | MWS Baseplate [Modular Baseplate Assembly] | 1 | SEG33110490-303 | 1001 | 00008735J | **A/L Deployed** (on overhead Single-Strap) | |
| 7 | | | MWS T-Bar | 1 | SEG33110493-305 | - | - | | **REPORT** S/N. |
| 8 | | | Body Restraint Tether [BRT Assembly] | 1 | SEG33110400-309 | 1001 | - | | |
| 9 | | | Swing Arm Assy, RH | 1 | SEG33110491-307 | 1004 | - | | |
| 10 | | | PGT | 1 | GE1557000 | - | - | | **REPORT** Lg ID number. |
| 11 | | | 7/16 x 2" Rigid | 1 | SEG33106930-301 | - | - | **A/L1O0** 1.0 CTB: EVA Miscellaneous Tools #2, S/N 1161, B/C 004155J | |

**Table C: Deconfigure EV2 MWS**

| Item # | ☑ | Location | Item | QTY | P/N | S/N | B/C | Final Location | Notes |
|---|---|---|---|---|---|---|---|---|---|
| 12 | | **A/L Deployed** (on overhead Single-Strap per prep xfer to shuttle) | MWS Baseplate [Modular Baseplate Assembly] | 1 | SEG33110490-303 | 1002 | - | **A/L Deployed** (on overhead Single-Strap) | |
| 13 | | | MWS T-Bar | 1 | SEG33110493-305 | - | - | | **REPORT** S/N. |
| 14 | | | EVA Trash Bag [Shuttle Style] | 1 | 10165-10065-03 | 1017 | - | **A/L1O0** 1.0 CTB: EVA Miscellaneous Tools #1, | |

| | | | | | | | | | |
|---|---|---|---|---|---|---|---|---|---|
| | | | | | | | | S/N 1075, B/C 004069J | |
| 15 | | | Body Restraint Tether [BRT Assembly] | 1 | SEG33110400-309 | 1021 | - | **A/L Deployed** (on overhead Single-Strap) | |
| 16 | | | Swing Arm Assy, RH | 1 | SEG33110491-307 | 1003 | - | | |
| 17 | | | PGT | 1 | GE1557000 | - | - | | **REPORT** Lg ID number. |
| 18 | | | 7/16 x 6" Wobble | 1 | SEG33106931-301 | - | - | **A/L1O0** 1.0 CTB: EVA Miscellaneous Tools #2, S/N 1161, B/C 004155J | |

26

**Table D: Deconfigure C Bag**

| Item # | ☑ | Location | Item | QTY | P/N | S/N | B/C | Final Location | Notes |
|---|---|---|---|---|---|---|---|---|---|
| 19 | | **A/L Deployed** C Bag | Gimbal Lock #1 [Housing Assy, FSE – Right] | 1 | 8264915-901 | - | - | **A/L1D0 (Behind Closeout)** | **RESTOW** these items prior to stowing the C Bag on STS. |
| 20 | | | Gimbal Lock #2 [Housing Assy, FSE – Left] | 1 | 8264914-901 | - | - | | |

**Table E: Deconfigure Mesh Bag: Done Tools**

| Item # | ☑ | Location | Item | QTY | P/N | S/N | B/C | Final Location | Notes |
|---|---|---|---|---|---|---|---|---|---|
| 21 | | **A/L Deployed** Mesh Bag: Done Tools | Torque Wrench Bag | 1 | SEG33110183-301 | 1003 | - | **A/L Crewlock** Staging Bag | **STOW** on Fish Stringer #1. |
| 22 | | | Torque Wrench | 1 | SEG33106948-301 | 1007 | - | | |
| 23 | | | MWS T-Bar | 1 | SEG33110493-305 | 1006 | - | **A/L1O0** 1.0 CTB: EVA Miscellaneous Tools #1, S/N 1075, B/C 004069J | |
| 24 | | | WIF Adapter | 1 | SEG33106863-309 | 1013 | - | | |
| 25 | | **A/L Deployed** Mesh Bag: Done Tools | Drop Proof Tether Adapter | 1 | SEG33106947-301 | - | - | **A/L1O0** 1.0 CTB: EVA Miscellaneous Tools #2, S/N 1161, B/C 004155J | **REPORT** S/N. |
| 26 | | | Palm Wheel | 1 | SEG33106954-301 | - | - | | **STOW** on EVA Ratchet coming out of Crewlock Bag #3. Ref Item **55.**<br><br>**REPORT** S/N. |
| 27 | | | EVA Ratchet | 1 | SEG33106927-303 | - | - | | |
| 28 | | | EDF Bolt | 1 | 51612-3415-3 | - | - | **A/L1D2** 1.0 CTB: Unique EVA Tools, S/N 1022, B/C 002317J | |
| 29 | | | FUSE #1 Cap | 1 | - | - | - | **NOD1P2** Mesh Bag: | |
| 30 | | | FUSE #2 Cap | 1 | - | - | - | | |

| | | | | | | | | | |
|---|---|---|---|---|---|---|---|---|---|
| 31 | | | Elec cap from EOTP | 2 | - | - | - | EVA Future Return/Trash | |
| 32 | | | EOTP Shower Cap | 1 | - | - | - | | |
| 33 | | | SGTRC MLI [boom box] | 1 | - | - | - | | |
| 34 | | | Round Scoop | 1 | SEG33107677-301 | 1001 | - | **A/L Deployed** Mesh Bag: Scoops | |

**Table F: Deconfigure Crewlock Bag #1 (If Required)**

| Item # | ☑ | Location | Item | QTY | P/N | S/N | B/C | Final Location | Notes |
|---|---|---|---|---|---|---|---|---|---|
| 36 | | **Crewlock Deployed** Crewlock Bag #1 | Vise Grip Pliers | 1 | SEG33106922-301 | 1001 | - | **A/L Crewlock** Staging Bag | **Stow** on Fish Stringer 1 |
| 37 | | | Pin Straightener Assy | 1 | SEG33106913-301 | 1001 | 001948J | | **Stow** on Fish Stringer 2 |
| 38 | | | PROBE | 1 | SEG33106923-701 | 1001 | - | | **Stow** on Fish Stringer 2 |
| 39 | | | 1/4"X1/2" Allen Driver [MMOD Shield T-handle Tool] | 2 | SED39127091-301 | - | - | **A/L1O0** 1.0 CTB: EVA Miscellaneous Tools #2, S/N 1161 B/C 004155J | **REPORT** S/N. |
| 40 | | | Socket Caddy | 1 | SEG33106938-301 | - | - | | **REPORT** S/N. |
| 41 | | | Square Torque Multiplier Board | 1 | SEG33106295-301 | - | - | | |

**Table G: Deconfigure Crewlock Bag #4 and remove Tape mark "P"**

| Item # | ☑ | Location | Item | QTY | P/N | S/N | B/C | Final Location | Notes |
|---|---|---|---|---|---|---|---|---|---|
| 42 | | **Crewlock Deployed** Crewlock Bag #4 "Pallet" | Square Torque Multiplier | 1 | SEG33106261-301 | 1003 | - | **A/L1O0** 1.0 CTB: EVA Miscellaneous Tools #2, S/N 1161, B/C 004155J | **STOW** torque multiplier on Square TM Tool Board. Ref item 41. |
| 43 | | | 7/16" Socket Recessed Square Torque Multiplier | 1 | SDG33107087-009 | 1010 | - | | **STOW** socket on Square TM Tool Board. Ref item 41**.** |
| 44 | | | Socket Caddy | 1 | SEG33106938-301 | - | - | | **REPORT** S/N. |
| 45 | | | 7/16 x 6" Wobble | 1 | SEG33106931-301 | 1019 | 004343J | | |
| 46 | | | Needle Nose Pliers | 1 | SEG33106921-301 | 1007 | - | **A/L Crewlock** Staging Bag | **Stow** on Fish Stringer 2 |
| 47 | | | Square Scoop | 4 | SEG33106330-301 | - | - | **A/L Deployed** Mesh Bag: Scoops | |
| 48 | | | Tie Wrap Assembly (PTU troubleshooting) | 2 | - | - | - | **Common Trash** | |

**Table H: Deconfigure Crewlock Bag #3 and remove Tape mark "T"**

| Item # | ☑ | Location | Item | QTY | P/N | S/N | B/C | Final Location | Notes |
|---|---|---|---|---|---|---|---|---|---|
| 49 | | **Crewlock Deployed** Crewlock Bag #3 "Truss" | MUT End Effector Assy | 2 | SEG33106890-303 | 1001<br>1004 | 0003186J<br>00018512J | **A/L1O0** 1.0 CTB: MWS Hardware, S/N 1013, B/C 002308J | |
| 50 | | | Ballstack | 1 | SEG33106870-703 | 1013 | - | | |

| | | | | | | | | | |
|---|---|---|---|---|---|---|---|---|---|
| 51 | | | Small EVA Trash Bag | 1 | SEG33106678-301 | - | - | **A/L1O0** 1.0 CTB: EVA Miscellaneous Tools #1, S/N 1075, B/C 004069J | |
| 52 | | | Gap Spanners | 4 | - | - | - | **A/L1D0** (Behind Closeout) | |
| 53 | | | Small EVA Trash Bag (Damaged) | 1 | SEG33106678-301 | 1007 | - | - | **CONFIRM** empty and zipped up. **STOW** in ziplock bag marked "Check MCC prior to use" |
| 54 | | | EVA Scissors | 1 | SEG33106919-305 | 1001 | - | **A/L1O0** 1.0 CTB: EVA Miscellaneous Tools #2, S/N 1161, B/C 004155J | |
| 55 | | | EVA Ratchet | 1 | SEG33106927-303 | - | - | | **INSTALL** Palm Wheel from the Done Tools Mesh Bag. Ref item **26**. |
| 56 | | | 7/16 x 2" Rigid | 1 | SEG33106930-301 | - | - | | **REPORT** S/N. |

**Table I: Stow A/L Deployed Items**

| Item # | ☑ | Location | Item | QTY | P/N | S/N | B/C | Final Location | Notes |
|---|---|---|---|---|---|---|---|---|---|
| 57 | | **A/L Deployed** | PDGF UNIVERSAL MCF ADAPTER ASSEMBLY (PUMAA) | 1 | 260213-207676-551 | - | - | **A/L1D2** 1.0 CTB: Unique EVA Tools, S/N 1022, B/C 002317J | **1.** REMOVE PUMAA from PDGF. Use PGT in B7 CCW2, release expected at ~10 turns. **2.** Stow PDGF on the starboard wall of the crewlock, using bungies, to prevent inadvertent contact with crew, EMU, and hardware . Report location and take photos. (REF. MSG 23-0688) |
| 58 | | | Round Scoop | 1 | SEG33107677-301 | 1002 | - | **A/L Deployed** Mesh Bag: Scoops | |
| 59 | | | Crewlock Bag #2 | 1 | SEG33111751-303 | 1004 | - | **Crewlock Deployed** | |
| 60 | | | PDGF | 1 | 51618-0002-1 | - | - | | PDGF Safing/Stow is scheduled for FD10 |

| | | | | | | | | | |
|---|---|---|---|---|---|---|---|---|---|
| 61 | | | Small ORU Transfer Bag | 1 | SEG33114494-311 | | | **A/L1O_Attic** | This bag should now be empty. **REPORT** any additional items found. |
| 62 | | | Medium ORU Transfer Bag | 2 | SEG33114494-309 | 1004<br>1005 | - | | This bag should now be empty. **REPORT** any additional items found. |

**Table J: Stow Mesh Bag of Scoops**

| Item # | ☑ | Location | Item | QTY | P/N | S/N | B/C | Final Location | Notes |
|---|---|---|---|---|---|---|---|---|---|
| 63 | | **A/L1O0**<br>1.0 CTB: EVA Miscellaneous Tools #2, S/N 1161, B/C 004155J | Round Scoop | 1 | SEG33107677-301 | 1004 | - | **A/L Deployed**<br>Mesh Bag: Scoops | |
| 64 | | **A/L Deployed** | Mesh Bag: Scoops | 1 | - | - | - | **Crewlock Deployed**<br>Crewlock Bag #4 | |

**Table K: Confirm IV Bag Config**

| Item # | ☑ | Location | Item | QTY | P/N | S/N | B/C | Final Location | Notes |
|---|---|---|---|---|---|---|---|---|---|
| 65 | | **A/L Crewlock** IV Bag | ISS Contamination Detection Kit | 1 | SJG39136050-302 | 1001 | - | **A/L Crewlock** IV Bag | **CONFIRM** contents and configuration of IV Bag.<br><br>Black RETs stay in this bag (not for EVA). |
| 66 | | | Towel<br>[Wrapped with short wire tie] | 2 | - | - | - | | |
| 67 | | | Eq Hk RET<br>[Sm-Sm] | 1 | SEG33106164-381 | 4062 | - | | |
| 68 | | | SAFER Hand Controller Mount<br>[DCM Plug] | 1 | SV1006962-2 | '00004 | 00051187J | | |
| 69 | | | SAFER Hand Controller Mount<br>[DCM Plug] | 1 | SV1006962-2 | '00007 | 00059995J | | |
| 70 | | | Eq Hk RET<br>[Sm-Sm] | 1 | SEG33106164-381 | 4063 | - | | |
| 71 | | | ISS GP Caddy | 1 | SEG33113531-301 | 1008 | - | | |
| 72 | | | Adjustable Thermal Mitten | 1 | 0106-811540-03 | '022 | EMUG15J | | |
| 73 | | | Adjustable Thermal Mitten | 1 | 0106-811540-04 | '022 | EMUA16J | | |
| 74 | | | ISS GP Caddy | 1 | SEG33113531-301 | 1010 | - | | |
| 75 | | | Adjustable Thermal Mitten | 1 | 0106-811540-03 | '023 | EMUG19J | | |
| 76 | | | Adjustable Thermal Mitten | 1 | 0106-811540-04 | '023 | EMUG20J | | |

| | | | | | | | | | |
|---|---|---|---|---|---|---|---|---|---|
| 77 | | | Eq Hk RET [Sm-Sm] | 1 | SEG33106164-381 | 4073 | - | | |
| 78 | | | Socket Caddy Assy | 1 | SEG33106938-301 | 1011 | - | | |
| 79 | | | 1/2 x 8" Wobble | 1 | SEG33108423-301 | 1004 | - | | |
| 80 | | | 7/16 x 6" Wobble | 1 | SEG33106931-301 | 1014 | - | | |
| 81 | | | Ammonia Contamination Cue Card | 1 | - | - | - | | |

**Table L: Confirm Staging Bag Config**

| Item # | ☑ | Location | Item | QTY | P/N | S/N | B/C | Final Location | Notes |
|---|---|---|---|---|---|---|---|---|---|
| 82 | | **A/L Crewlock** Staging Bag | Adjustable Fuse Tether [Fish Stringer] | 1 | SED39127200-705 | 1011 | - | **A/L Crewlock** Staging Bag | **CONFIRM** contents and configuration of Staging Bag. |
| 83 | | | Vise Grip Pliers | 1 | SEG33106922-301 | 1001 | - | | |
| 84 | | | Wire Tie Caddy Assy | 1 | SEG33111586-301 | 1005 | - | | |
| 85 | | | Tape and Velcro Caddy | 1 | SED33104207-301 | 1005 | - | | |
| 86 | | | PGT | 1 | GE1557000 | #4 | - | | |
| 87 | | | EVA Ratchet | 1 | SEG33106927-303 | 1012 | - | | |
| 88 | | | 7/16 x 6" Wobble | 1 | SEG33106931-301 | 1018 | - | | |
| 89 | | | WIF Adapter | 1 | SEG33106863-309 | 1015 | - | | |

| | | | | | | | | | |
|---|---|---|---|---|---|---|---|---|---|
| 90 | | | Torque Wrench Bag | 1 | SEG33110183-301 | 1003 | - | | |
| 91 | | | Torque Wrench | 1 | SEG33106948-301 | 1007 | - | | |
| 92 | | | LDTD Tether | 1 | SEG33113860-301 | 1006 | - | | |
| 93 | | | LDTD Tether | 2 | SEG33113860-301 | - | - | **A/L1D2** Tether Staging Area | |
| 94 | | | Adjustable Fuse Tether [Fish Stringer] | 1 | SED39127200-705 | 1032 | - | **A/L Crewlock** Staging Bag | **CONFIRM** contents and configuration of Staging Bag. |
| 95 | | | Connector Cleaner Tool Kit | 1 | SJG33111630-301 | 1010 | - | | |
| 96 | | | MMWS Key Strap Assembly | 1 | SEG33110812-301 | 1008 | 00008653J | | |
| 97 | | | Enhanced Right Angle Drive | 1 | SEG33120447-301 | 1002 | - | | |
| 98 | | | Pry Bar | 1 | SDG33106924-001 | 1004 | 00001199J | | |
| 99 | | | Needle Nose Pliers | 1 | SEG33106921-301 | 1007 | - | | |
| 100 | | | Pin Straightener Assy | 1 | SEG33106913-301 | 1001 | 001948J | | |

| | | | | | | | | | |
|---|---|---|---|---|---|---|---|---|---|
| 101 | | | PROBE | 1 | SEG33106923-701 | 1001 | - | | |

EMU PRE-PACK

Both EMUs

☐ 1. Connect LTA to HUT

☐ 2. Remove helmet

☐ 3. Remove Comm Caps, stow in respective ECOKs.
√DIDB restraint bags in correct position

☐ 4. Install helmet, sun visors down
For EMU 3018 (RM) only, remove Helmet Lights and EMU TV, temp stow.
Install helmet covers on both

☐ 5. Remove MWS and stow on single strap deployed in A/L overhead

☐ 6. Remove EMU Batteries and stow in Done Bag to stay on ISS

EMU 3018 (RM)

☐ 7. Verify LiOH installed and install EMU battery for return per STS-132 CONSUMABLES TRACKING CUE CARD

☐ 8. Remove REBA from PLSS and stow in M-02 Bag (s/n 1038)

EMU 3009 (G)

☐ 9. Remove used LiOH and tape ports with Kapton tape; stow in Xfer to Shuttle Bag.
Install vent port plugs on EMU from EMU Equipment Bag

Both EMUs

☐ 10. Remove STS-132 Cuff C/L flight specific pages and stow ISS EVA Cuff C/L in Done Bag

☐ 11. Gather EMU crew-specific items and place in respective ECOKs

EMU 3009 (G)

☐ 12. Remove and stow in G ECOK:
- ☐ STS-132 mission patch
- ☐ American flag
- ☐ Crew identifier stripes (EV4)
- ☐ EMU gloves (G1) – install lower arm covers (4) from G ECOK on gloves and suit arms

EMU 3018 (RM)

☐

☐ 14. Remove EMU Boots (s/n 233) from EMU 3018 (RM) LTA; temp stow

☐ 15. Retrieve EMU Boots (s/n 221) from 132 EVA Stuff Bag and install; temp stow covers.
Take Lock 1 → LOCK; √All locks (three per boot) are engaged

☐ 16. Install covers on EMU Boots (s/n 233), stow boots in M-02 bag (s/n 1010)

☐ 17. Remove D-ring extender (2) and stow in Tether Staging Area.

☐ 18. Verify suit config for RM Down Config using <u>STS-132 NOMINAL EMU SIZING</u> in section 12

Both EMUs ☐ 19. √PWR – SCU
√PURGE vlv – op (up)
√O2 ACT – OFF
√WATER – OFF, switch guard installed

EMU 3018 (RM) ☐ 20. Remove EMU 3018 (RM) from FWD EDDA and temp stow for EVA Transfer To Shuttle

EMU 3009 (G) ☐ 21. Remove EMU 3009 (G) from AFT EDDA and stow FWD EDDA.

EMU 3010 (ISS) ☐ 22. Retrieve EMU 3010 (ISS suit) from Bungee Jail (LAB1S1) and stow in AFT EDDA.

EVA Sys Xfer Bag ☐ 23. Swap EMU Servicing Kits:
☐ EMU Servicing Kit (s/n 5004) – Stays on ISS
☐ EMU Servicing Kit (s/n 5002) – Transfer to STS

EMU 3004 (BW) ☐ 24. √PWR – SCU
√PURGE vlv – op (up)
√O2 ACT – OFF
√WATER – OFF, switch guard installed

☐ 25. Verify D-ring extender (2) removed from EMU 3004 (BW) and stowed in Tether Staging Area

☐ 26. Remove any ISS tools from EMU 3004 (BW) and EMU 3018 (RM) and place in Done Bag.

☐ 27. Verify/configure all items for transfer per table below:

| **Verify items on EMU 3004 (BW)** | **Verify items on EMU 3018 (RM)** |
|---|---|
| ☐ Helmet (√sun visors down, cover installed)<br>☐ Valsalva<br>☐ Fresnel Lens<br>☐☐ EMU Gloves (BW2)<br>☐☐ Adjustable Equipment Tether (2)<br>☐☐ Wrist Mirror<br>☐ Waist tether (1)<br>☐ EMU Battery (s/n _2082_)<br>☐ LiOH (used)<br>☐ LTA | ☐ Helmet (√sun visors down, cover installed)<br>☐ Valsalva<br>☐☐ EMU Gloves (RM2)<br>☐☐ Wrist Mirror<br>☐☐ Waist tether (2)<br>☐ EMU Battery (s/n 2085)<br>☐ LiOH (used)<br>☐ LTA |
| **Verify items below in BW ECOK:**<br>☐☐ BW EVA 1 & 2 ziplocks (each bag):<br>☐ TCUs (top & bottom)<br>☐ Spectra comfort gloves<br>☐ Tube socks<br>☐ Wristlets<br>☐ Croakie (1)<br>EVA 2 bag also includes:<br>☐ Crew identifier stripes (EV1)<br>☐ STS-132 mission patch<br>☐ American flag<br><br>☐ LCVG (BW1)<br>☐ Comm Cap (BW1)<br>☐ Comm Cap (BW2) | **Verify items below in RM ECOK:**<br>☐☐ RM EVA 1 & 3 ziplocks (each bag):<br>☐ TCUs (top & bottom)<br>☐ Custom comfort gloves<br>☐ Thermal poly liners socks<br>EVA 3 bag also includes:<br>☐ Crew identifier stripes (EV2)<br>☐ STS-132 mission patch<br>☐ American flag<br>☐ 1/8-in Heel Pad<br><br>☐ LCVG (RM1)<br>☐ Comm Cap (RM1)<br>☐ Comm Cap (RM2)<br>☐ Spare Mesh Bag (empty) |
| **Verify items below in G ECOK:**<br>☐☐ G EVA 2 & 3 bag includes (each bag):<br>☐ TCUs (top & bottom)<br>☐ Spectra comfort gloves<br>☐ Thermal poly liners socks<br>☐ Croakie (1)<br>☐ Crew identifier stripes (EV4)<br>☐ STS-132 mission patch<br>☐ American flag<br><br>☐ LCVG (G1)<br>☐ Comm Cap (G1)<br>☐ Comm Cap (G2)<br>☐☐ EMU Gloves (G1) (with covers installed) | **Verify items below in Xfer to Shuttle Bag:**<br><br>_____<br>**Xfer to Shuttle Bag:**<br>☐ 85-ft Safety Tether (#25)<br>☐ 85-ft Safety Tether (#27)<br>☐ Old ISS EVA Systems Checklist (ISS copy, no stripe)<br>☐ STS-132 CONSUMABLES TRACKING CUE CARD<br>☐ STS-132 EVA BATTERY RECHARGE PLAN CUE CARD<br>☐ EMERGENCY UNDOCKING/EXPEDITED SUIT DOFFING CUE CARD<br>☐ 10.102 Joint Emergency Egress CC<br>☐ ISS EVA Systems Checklist (STS-132 copy with Red stripe)<br>☐ FDF STS-132 EVA CHECKLIST |

| **Verify items below in EVA Systems Xfer Bag:** | **Verify items below in C Bag:** |
|---|---|
| ☐ EMU Servicing Kit (s/n 5002) | ☐ EOTP Input Drive Bracket |
| ☐ SAFER Hardmount (s/n 04) | ☐☐ 7/16-in 2-in ext sockets (2) |
| ☐ EMU Battery (s/n 2078) | ☐ EOTP Contingency Socket |
| ☐ EVA Helmet Light Assembly (s/n 1003) | ☐ MWS Key Strap Assembly |
| ☐ EVA Helmet Light Assembly (s/n 1005) | **Gather empty ziplock bag and stow items below in ziplock and place in C Bag:** |
| ☐ Shuttle Shared Crew Compartment | ☐☐☐☐SGANT Connector Cap - Size 15 (4) |
| ☐ Ziplock with crew specific luggage tags | ☐☐ SGANT Connector Cap - Size 21 (2) |

☐ 28. Verify new ISS EVA Systems Checklist (no stripe) is deployed in
ISS A/L per Tony's xfer post EVA 3.

EMU Equipment Bag

☐ 29. Retrieve Jewelers Screwdriver Set from the EMU Equipment Bag
Shared Compartment and return to NOD1D4_G2 Drawer 3 (ISS Tool Box).

# Spinal Elongation Big Picture Words

****Please use the procedures and logs printed in the ULF4 Assembly Operations Procedures book****

## 1. Spinal Setup Helpful Hints

- The Anthropometer Base should slide easily into the seat and should not be forced
- Spinal Hardware should not be used as a hand-hold
- Raise the seat pan so it is slightly above the center console

## 2. Camera Setup Helpful Hints

- Ensure camera is parallel to R6 wall and not pitched to deck or overhead
- Lens set at 15mm
- After focusing on the side of the CDR seat, switch to **Body Focus Mode M** to prevent focus shifting to another object

## 3. Photo Capture Area Required for Data Analysis

- The entire edge of the center console and edge of the seat pan
- The back edge of CDR seat
- The top of the Slider Post
- Focus should be centered on the black holes within the area circled

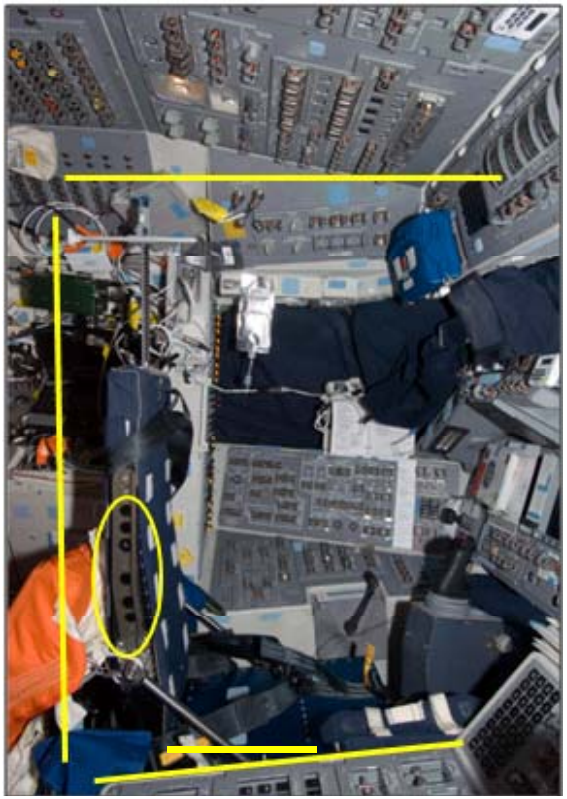

**Photo should meet these criteria before data collection can begin**

**Note the change in Execution Note to skip steps for photo downlink since ground evaluation is not required before data collection begins**

## 4. Subject Positioning

- Lap belt tight, ensuring contact with seat
- Feet positioned on floor of deck (not under rudder pedals), thighs positioned 90 degree from body
- Gaze straight ahead
- Ignore sensation of not feeling contact with the seat; as long as restrained tightly per procedure, subject will be in contact with the seat (if additional data points are attempted please record on log and note how the data point was different from nominal procedures)

Incorrect: camera pitched to deck

Incorrect: camera pitched to overhead

Correct: no camera pitch

## 5. Perform Standing Height

- Procedure and log are in Shuttle AOP book
- Note the location on the log if placed in a different location for data collection

## 6. Hardware Stow

- Spinal Elongation Kit must be restowed on ISS prior to undocking

Steve, Big G, Bueno, Tony, and Hock,

Great work on EVA3. We really enjoyed watching you accomplish everything. Just a few notes for you today.

1. Bueno's primary (G1) and Big G's backup (RM2) gloves from EVA3 have been cleared for additional EVA use, as required.

2. {Uplinked Procedures; US SODF: EVA Systems; 23-0676 (MSG 079) EVA Prep for Transfer to Shuttle} is your revised EVA Prep for Transfer to Shuttle procedure. Additional hardware has been added to the 'C Bag' for return. EMUs will be rearranged in the Joint Airlock to help out with the upcoming EVA increment activities. Steps have also been added to restow ISS hardware that's no longer required.

3. {Uplinked Procedures; US SODF: EVA Task; 23-0669 (MSG 078) ULF4 Tool Restow} is your EVA ULF4 Tool Restow procedure. Tracy is the only crewmember currently scheduled to perform this task, but we know you wanted to have a copy of this too. This procedure is on the uplink-shelf. Please use 'crew notes' in OSTPV to report serial numbers and discrepancies.

Again, way to go with all your EVAs. This has been a very successful EVA mission and we are thankful to be working with such a great crew.

OBJECTIVE:

This procedure will be used to transfer frozen science samples from both ISS MELFI-1 (JPM1D4) and MELFI-2 (LAB1S2) to Shuttle Glacier. One Double Coldbag will be used to transfer samples from MELFI to Glacier. This activity is performed by ISS and Shuttle crewmembers.

PARTS:

Double Coldbag S/N 1009

LtWt Cryo Gloves (Mechanix Wear)

Coldplate/Wireway-Cover P/N 03000 (if required)

STS IFM TOOLS (MF14H):

3/16" Hex Head, 3/8" Drive

1/4" to 3/8" Adapter, 1/4" Drive

4" Ext, 1/4" Drive

Ratchet, 1/4" Drive

(40-200 in-lbs) Trq Wrench, 1/4" Drive

ITEMS TO UNSTOW WITHIN PROCEDURE:

Icepacs -32° C (two) (unstow step 2)

3x5 Mesh Bags, Blood (unstow step 2)

Vial Bags, Blood (unstow step 2)

JAXA Hair (unstow step 2)

JAXA Myolab (unstow step 2)

JAXA Fish Scales (unstow step 2)

JAXA NeuroRad (unstow step 2)

1. UNLOCK GLACIER DOOR

MF28E/G (Glacier)

1.1 If door locked, then unlock Glacier Door Captive Locks (two) using 3/16" Hex Head, 3/8" Drive; 1/4" to 3/8" Adapter, 1/4" Drive; 4" Ext, 1/4" Drive; Ratchet, 1/4" Drive. See Figure 1 Glacier Configuration.

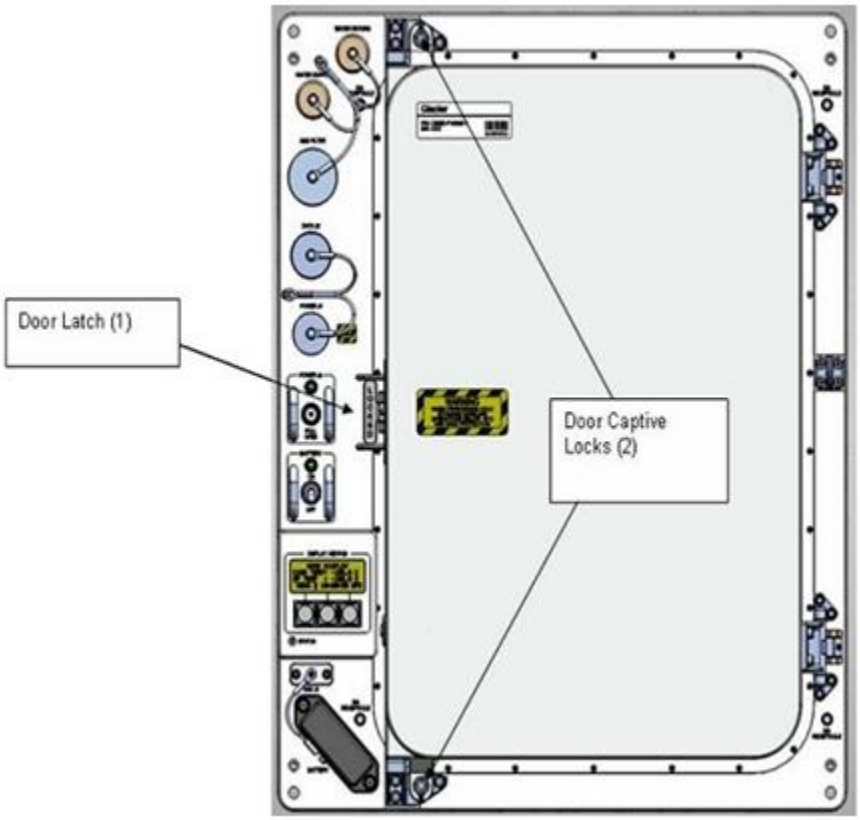


Figure 1. Glacier Configuration.

1.2 Stow tools.

MELFI-1
MELFI-2

2. PACKING MELFI SAMPLES INTO DOUBLE COLDBAG

| WARNING |
| --- |
| Protective Gloves must be worn when manipulating MELFI trays or samples to prevent injury to exposed skin. |

| CAUTION |
| --- |
| 1. Minimize exposure of MELFI trays, frozen Icepacs, and samples to ambient air to prevent increased sample temperatures. |
| 2. Double Coldbag lid should remain closed when the internal volume is not being accessed. |

| NOTE |
| --- |
| The 60 seconds and 45 minutes MELFI Dewar opening rules do not apply during packing of the Coldbag. |

2.1 Don Gloves.

2.2 Pack Double Coldbag with samples from MELFI-1 and MELFI-2 per Figure 2. (All samples should be removed from each of the MELFI box module locations called out).

```
*****************************************************************************
*
*
*   If Tray is stuck and cannot be removed from Dewar
*   |
*   |     Insert Small Coldplate/Wireway Cover completely between
*   |      Tray and Dewar wall.
*   |
*   |     Firmly holding both Small Coldplate/Wireway Cover and Tray
*   |      Handle, remove Tray from Dewar.
*
*         Reference: 4.010 MELFI REMOVAL OF A STUCK TRAY (US
*          PODF: MELFI) if needed
*
*****************************************************************************
```

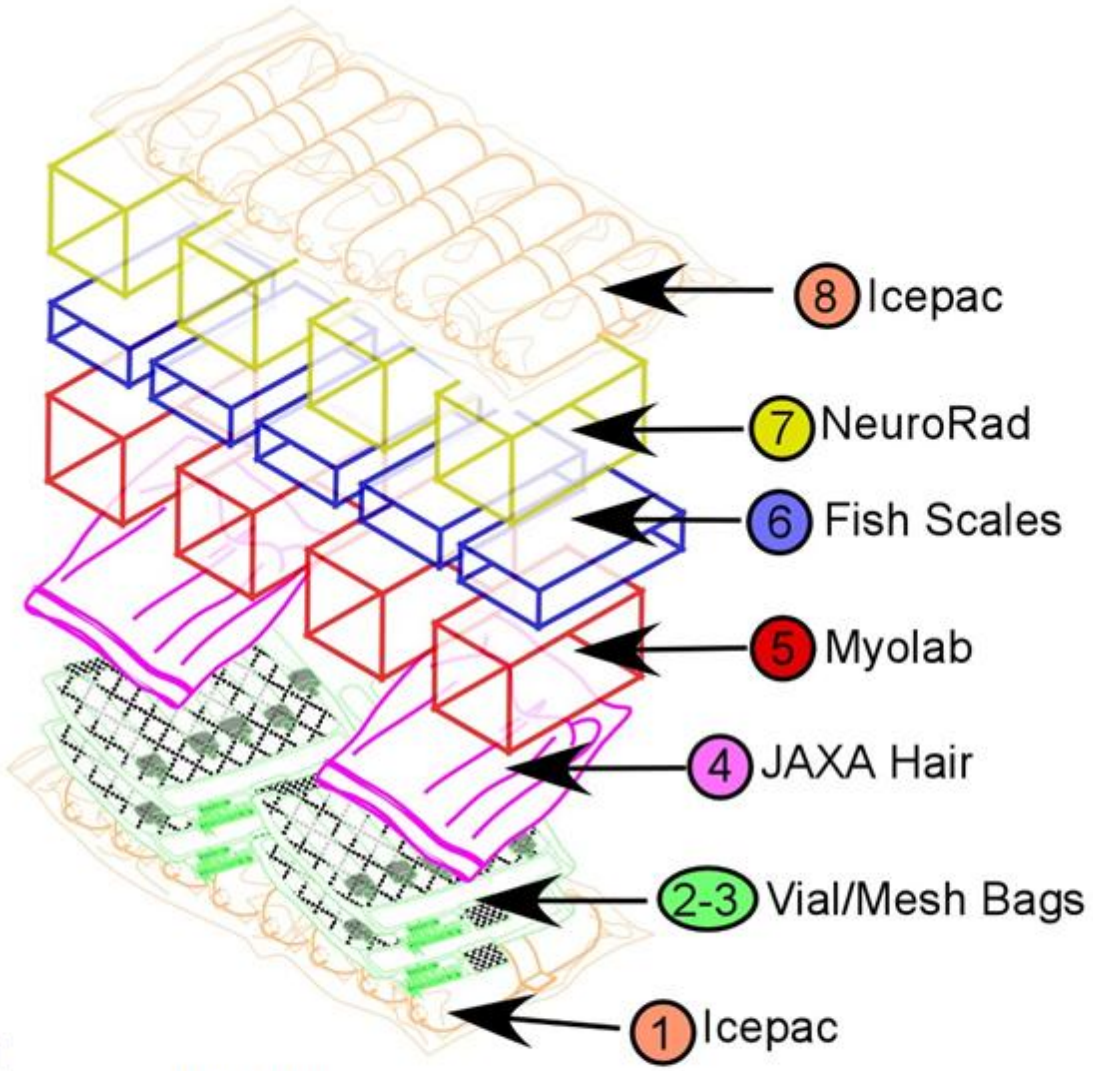


| Item | From MELFI Location* | | Description |
|---|---|---|---|
| 1 | MELFI-1 | 2-C-1 | Insert Icepac belt -32˚C on bottom |
| 2 | MELFI-1 | 1-C-4 | Insert HRP Blood vial bag (two) |
| 3 | MELFI-1 | 2-B-4 | Insert HRP Blood mesh bag (two) |
| 4 | MELFI-1 | 3-C-1 | Insert JAXA Hair ziplocks (two) |
| 5 | MELFI-2 | 2-B-3,4 | Insert JAXA MyoLab ziplocks (four) |
| 6 | MELFI-2 | 2-D-3,4 | Insert JAXA Fish Scale ziplocks (five) |
| 7 | MELFI-2 | 1-C-3,4 | Insert JAXA NeuroRad ziplocks (four) |
| 8 | MELFI-1 | 2-C-2 | Insert Icepac belt -32˚C on top |

* Dewar-Tray-Tray Section (3-A-1 = Dewar 3, Tray A, Tray Section 1)

Figure 2. Double Coldbag Packing Configuration.

3. TRANSFERRING DOUBLE COLDBAG FROM ISS TO SHUTTLE

ISS to Shuttle

3.1 Transfer Double Coldbag to shuttle middeck.

MF28E/G (Glacier)

4. UNPACKING DOUBLE COLDBAG AND INSERTING SAMPLES INTO GLACIER

**WARNING**

Protective Gloves must be worn when manipulating Glacier inner doors, trays or samples to prevent injury to exposed skin.

**CAUTION**

1. Minimize exposure of Glacier trays and samples to ambient air to prevent increased sample temperatures.
2. Glacier inner doors should remain closed when the internal volume is not being accessed. Glacier door should not be open for longer than two minutes.

NOTE

1. First priority is to perform packing as quickly as possible.
2. Packing foam secured to bottom of each tray can be left in place.

4.1 Don Gloves.

4.2 Open Glacier Door.

Tray D

4.3 Insert JAXA NeuroRad ziplocks (four).

Tray C

4.4 Insert JAXA Fish Scale Ziplocks (five).

Tray B

4.5 Insert JAXA Myolab Ziplocks (four) and JAXA Hair Ziplocks (two).

Tray A

4.6 Insert HRP Blood Mesh bags (two) and Vial Bags (two).

5. Close Glacier Door.

```
*****************************************************************************************
*
*
*   If Outer Door does not close
*   |    Press on top left corner or bottom left corner of door to assist with
*   |     closure.
*
*****************************************************************************************
```

6. ✓Door Latch – Locked (Finger latches fully spread apart and locking flap positioned between finger latches.)

| WARNING |
|---|
| Glacier Door Captive Locks (two) must be torqued to 75 in-lbs to prevent door from opening during launch and return. |

7. Fasten Glacier Door Captive Locks (two), torque to 75 in-lbs using 3/16" Hex Head, 3/8" Drive; 1/4" to 3/8" Adapter, 1/4" Drive; 4" Ext, 1/4" Drive; (40-200 in-lbs) Trq Wrench, 1/4" Drive. Refer to Figure 1.

8. TEMPORARY STOW DOUBLE COLDBAG AND ICEPACS

   8.1 Transfer Double Coldbag to location on ISS that allows protection from kick loads.

   8.2 Remove Icepac Belt -32° C (two) from Double Coldbag and place in temporary stowage location to air dry.

   8.3 Notify **MCC-H** that transfer activities completed and locations of Double Coldbag and Icepacs.

9. GROUND UPDATES FOR IMS

Ground updates IMS for the following parts:
Double Cold Bag S/N 1009 TO: per crew call down (step 8.3)
Icepac Belt -32° C (two) TO: per crew call down (step 8.3)
3x5 Mesh Bags (two) TO: Middeck Glacier
Vial Bags (two) TO: Middeck Glacier
JAXA Hair (two) TO: Middeck Glacier
JAXA Myolab (four) TO: Middeck Glacier

JAXA NeuroRad (four) TO: Middeck Glacier

Good Morning,
Below you will find the updated 5-MLE bag layouts.
**Note: Airlock Floor (bag I) will be uplinked with the Cabin Stow message.**
**MD FLOOR PORT 2 (bag F) no change from MSG 046.**

- The STS-132 Middeck Stowage Team

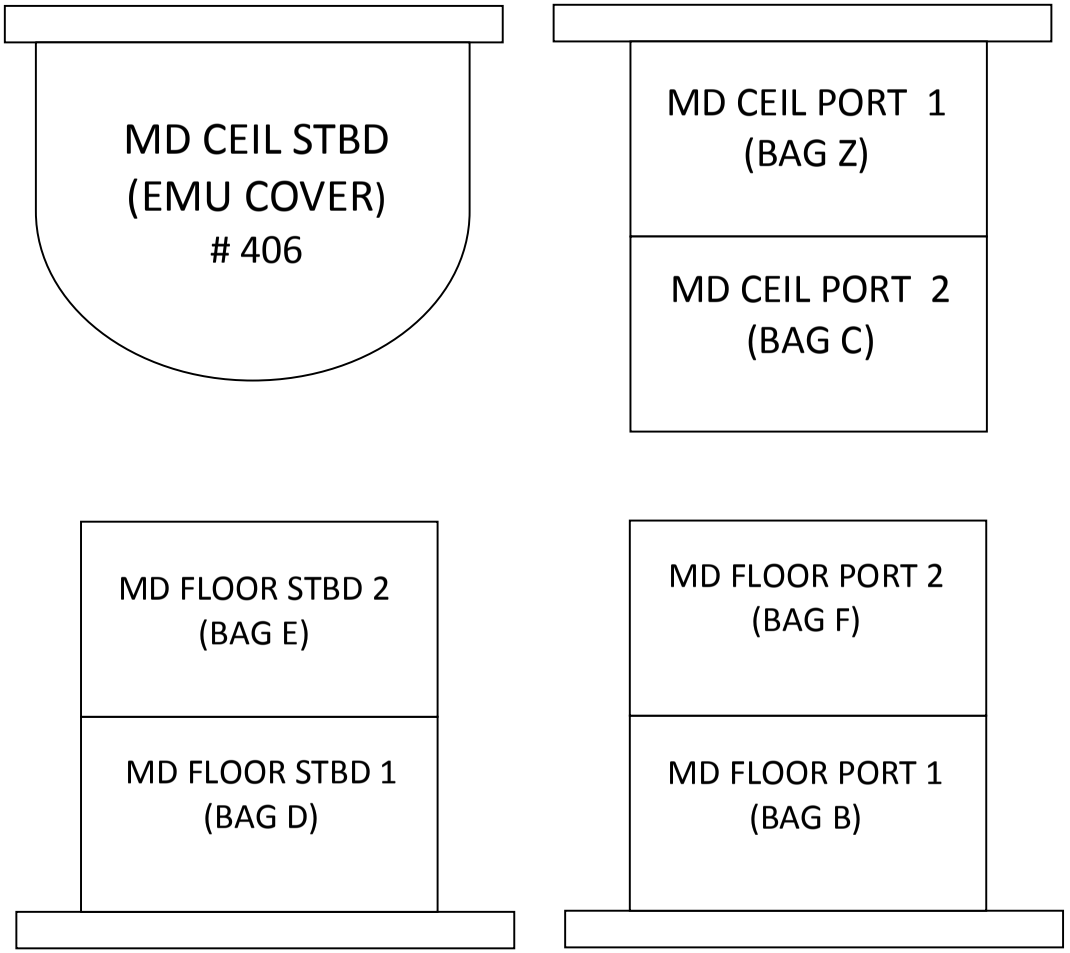


VIEW: DITCH LOOKING AFT

# MD FLOOR PORT 1 (BAG B)

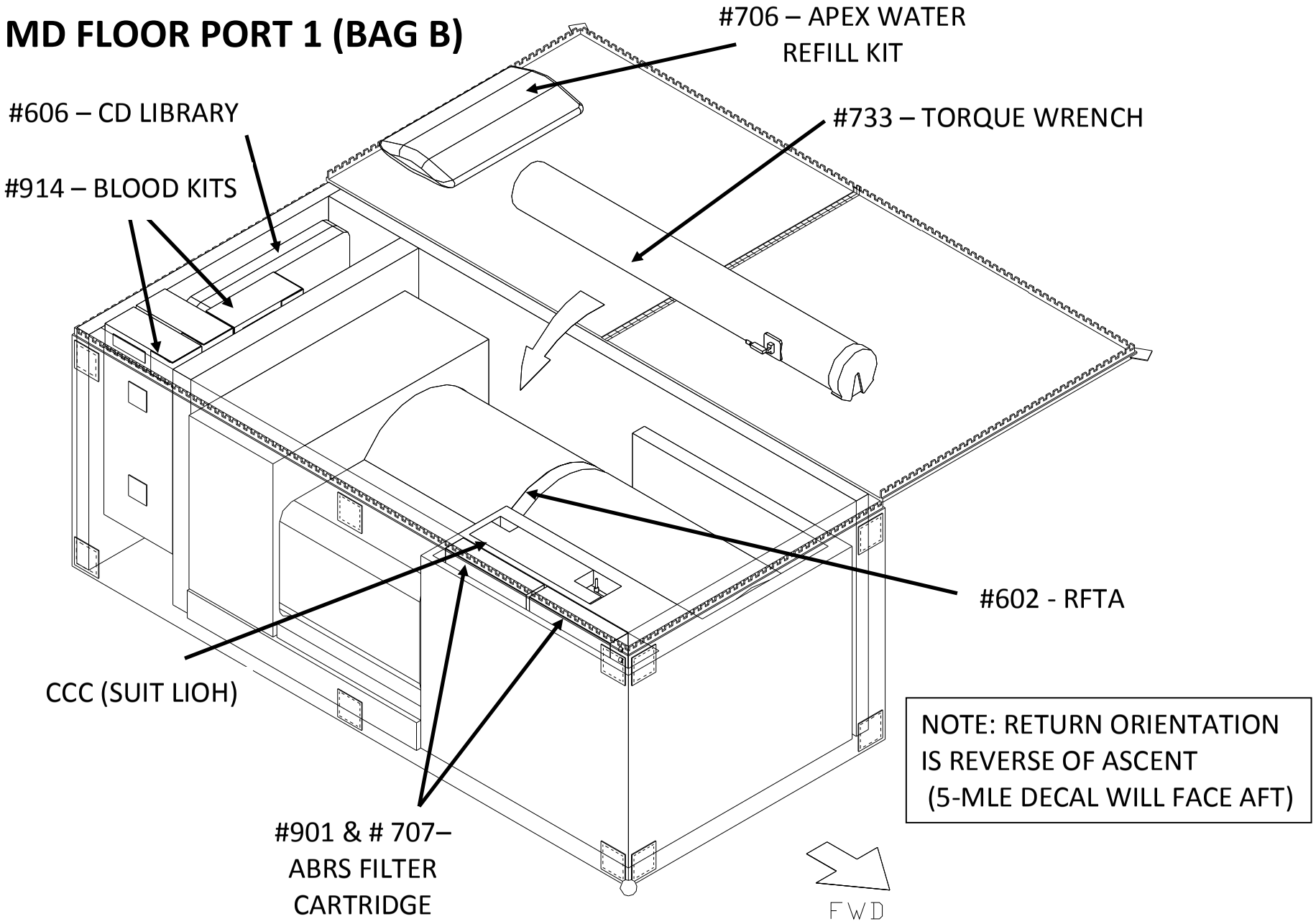


NOTE: RETURN ORIENTATION IS REVERSE OF ASCENT (5-MLE DECAL WILL FACE AFT)

# MD FLOOR STBD 2 – BAG E

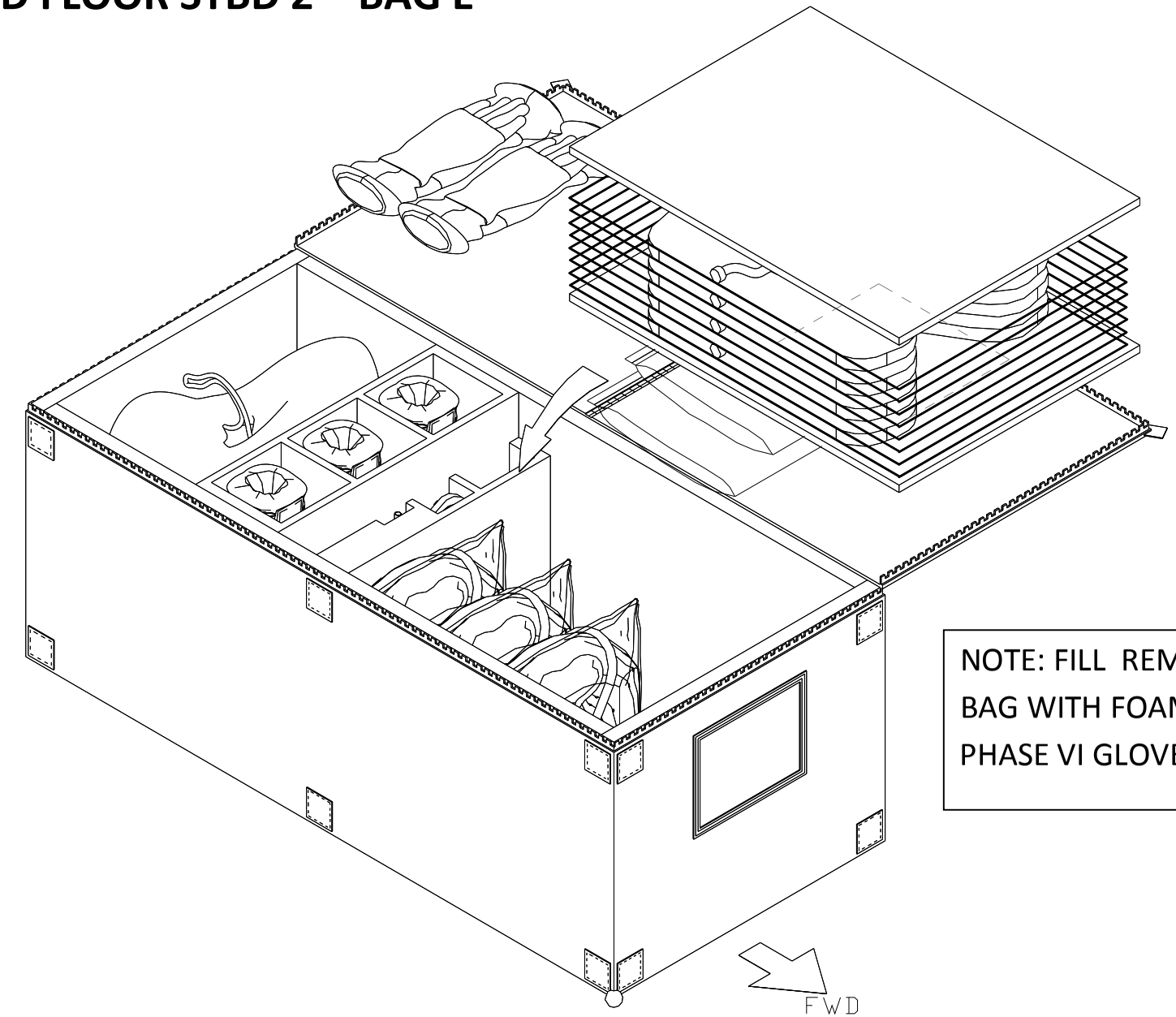


NOTE: FILL REMAINDER OF BAG WITH FOAM FWD OF PHASE VI GLOVES

# MD FLOOR STBD 1 – BAG D

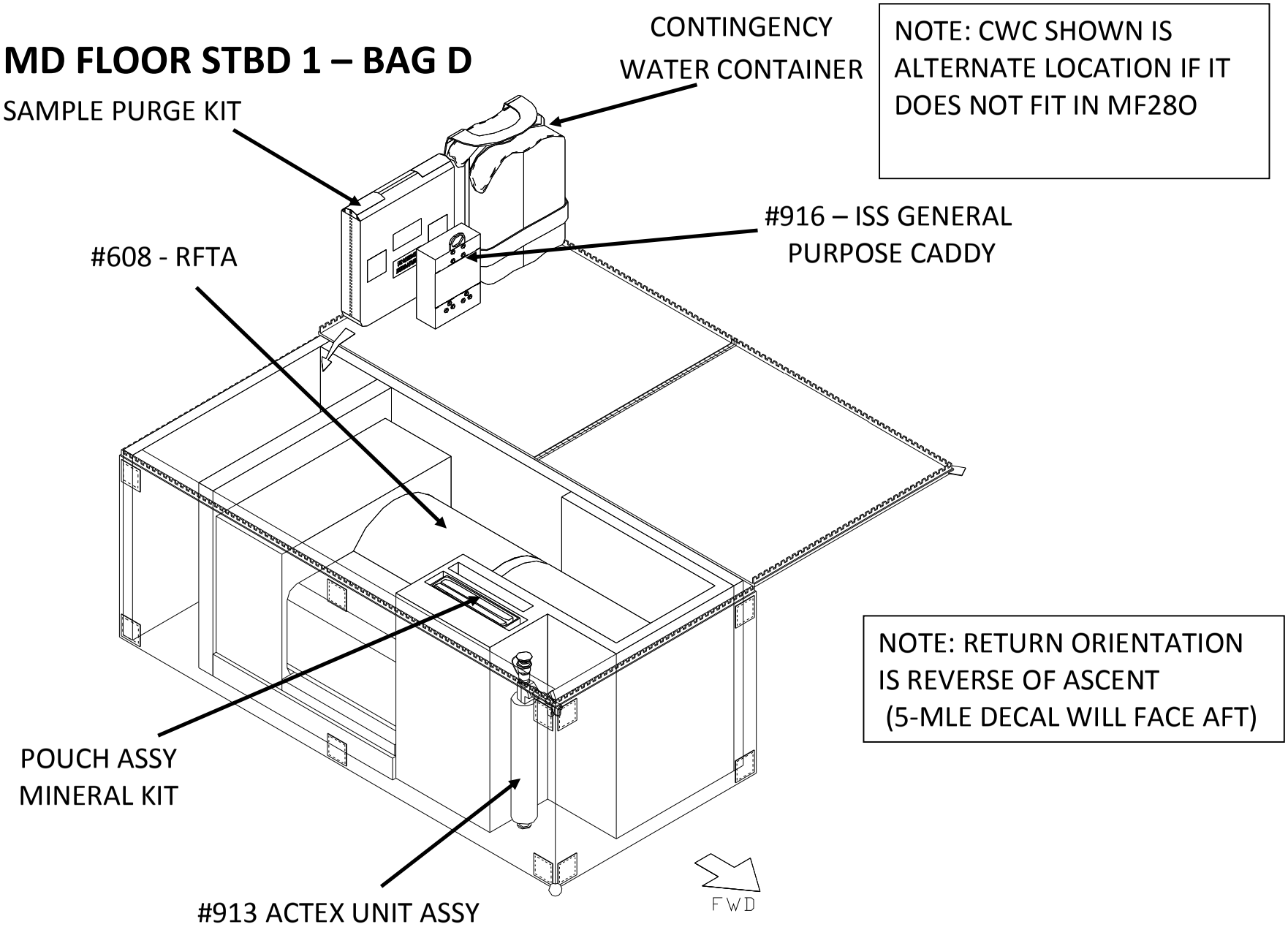


NOTE: CWC SHOWN IS ALTERNATE LOCATION IF IT DOES NOT FIT IN MF28O

NOTE: RETURN ORIENTATION IS REVERSE OF ASCENT (5-MLE DECAL WILL FACE AFT)

# MD CEIL PORT 1 – BAG C

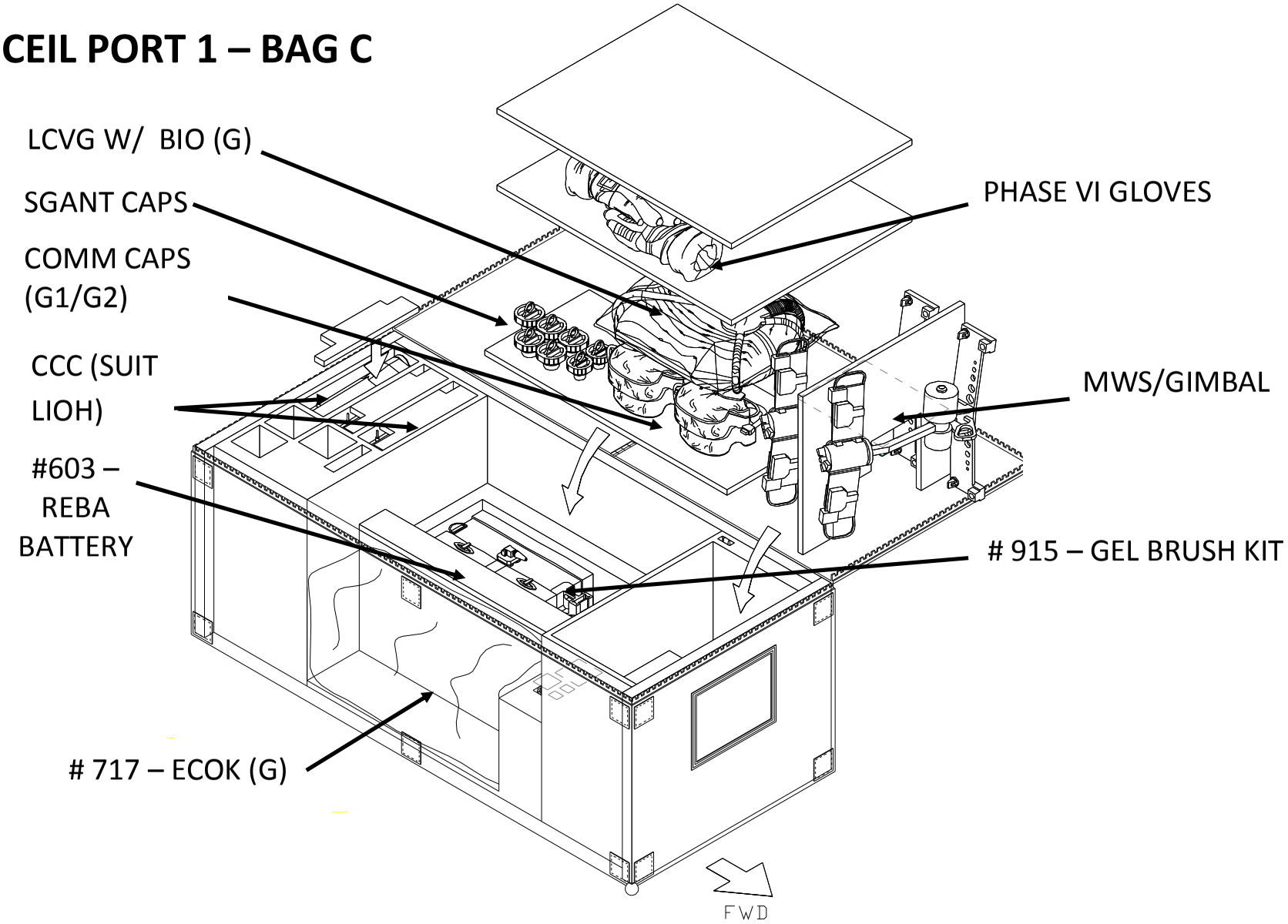

# MD CEIL PORT 1 – BAG Z

NOTE: ALL FOAM IN THIS BAG IS FROM BAG A (ASCENT)

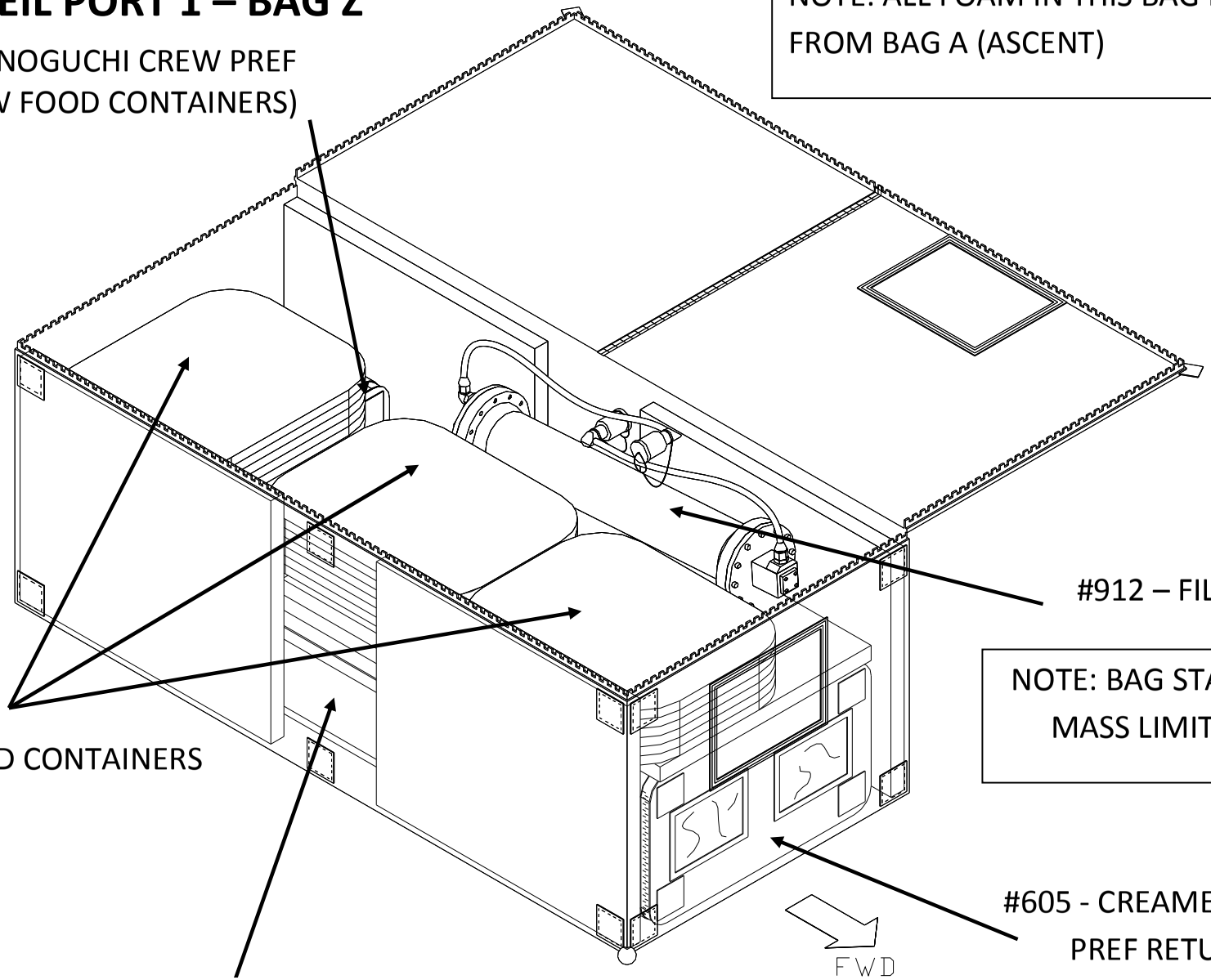


NOTE: BAG STACK IS MASS LIMITED

# SEAT 7 BAG

NOTE: FILL REMAINING VOIDS WITH FOAM AND/OR SOFT GOODS TO FURTHER SECURE THE EDV IN ITS CURRENT ORIENTATION

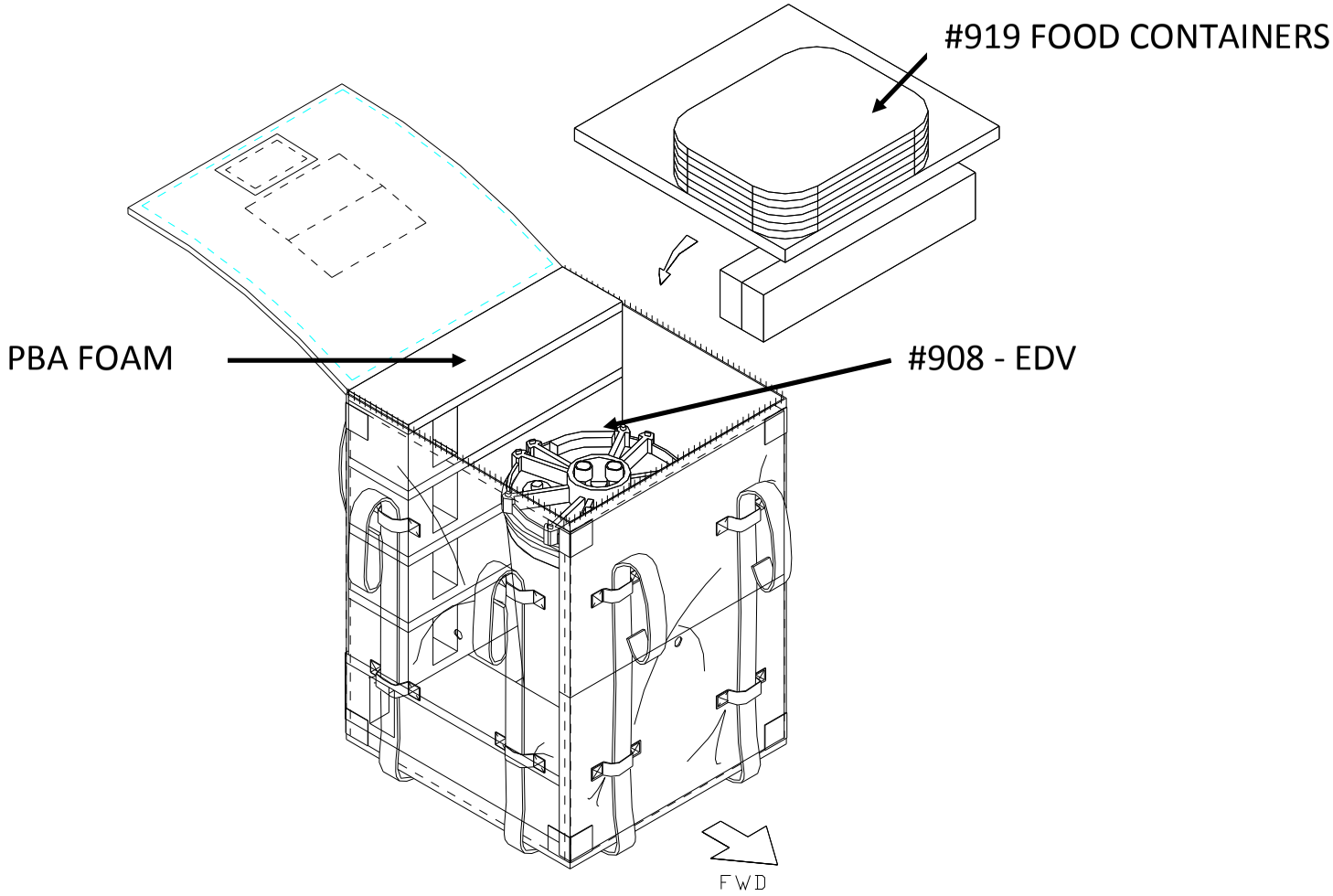

# DESCENT MODULAR LOCKER LAYOUT

| | |
|---|---|
| CDR | KEN HAM |
| PLT | TONY ANTONELLI |
| M/S #1 | GARRETT REISMAN |
| M/S #2 | MICHAEL GOOD |
| M/S #3 | STEVE BOWEN |
| M/S #4 | PIERS SELLERS |

| | |
|---|---|
| LEADER: | DEWEY LOUVIER |
| DATE: | 05-21-10 |
| LAUNCH: | 5-14-2010 |
| FLIGHT | STS-132/ULF4 |
| VEHICLE | OV-104 |
| CREW: | 6 CREW/12 + 0 + 2 DAYS |
| RQMTS: | NO RCRS, SLEEPING |
| | BAGS, EXT A/L, ERGOMETER, RMS |
| | LW MAR, NON-EDO VOL B |

LW MAR SJD32108929-366

ML60B 6013 -311

ML60E 1434 -306

TBD ITEM

ML60M 6014 -312

PANTRY FOOD 1622 -308 | MF57A PANTRY FOOD UTENSILS 1622 -308 | PANTRY FOOD 1622 -302

MIDDECK FORWARD

MF43C 1817 -301: # 400 HCTB | # 403 HCTB

MF57C 1820 -301: #402 CTB; #721, 722, 723 GSC; #906 CSA CP MONS (2); #709 CSA CP RESPLY

MF71C 1779 -302: #713 ECCO

MF14E 6269 -315: 6256-311

MF28E/G 1159 -301: #726 GLACIER (36 CFM/REAR BREATHER)

MF43E 6697 -341

MF57E 1900 -308

MF71E 1157 -301: MICRO 2(CGBA2)

MF14G 2766 -305

MF43G 1908 -309

MF57G 6240 -311

MF71G 2765 -304

MF14H 6250 -358: IFM TOOLS; # 907 NEEDLE NOSE PLIERS; # 727 ☒ MULTIMETER

MF28H 5452 -331: # 720 FOAM APLTRS (ALTIMETER ON LOCKER DR)

MF43H 1902 -309

MF57H 5473 -305

MF71H 1903 -305

MF14K 1805 TBD: POST INSERTION 2; ACTIWATCH (4); #920 TVIS DEBRIS

MF28K 6231 -382

MF43K 2764 -306

MF57K 2760 -306: WATER SAMPLES; #905 COMMEMORATIVE ITEM

MF71K 2767 -304

MF14M 6299 -327: # 736 ☒ WORK LTS(2)/LT; #911 D2X BATTERIES

MF28M 2763 -304

MF43M 1904 -309

MF57M 1901 -306

MF71M 3005 -304

MCIU

PDI

MF14O

MF28O 8965 -325

MF43O 8719 -309

MF57O 8723 -302

MF710 2768 -303

MIDDECK AFT

MA9D 1801 -301

MA16D 5971 -311: # 708 CGBA 6

MA9F 1821 -301: #405 CTB; #903 RET TO HOUSTON; #904 PASSIVE DET PCH

MA16F 1819 -301: GAP (8) | #401 HCTB

MA9G 8737 -311

MA16G 1818 -301: # 404 HCTB | #900 COMMEM ITEMS (QTY 10) (HCTB)

MA9J TBD: #710 COLD BAG

MA16J TBD: #711 COLD BAG

MA9L TBD: #712 COLD BAG

MA16L 9014 -319

MA9N 7432 -344: SOFT STWG BAGS

MA16N 0631 -321

VOL B (MA4D/J)

VOL 3B (MA75J) 7425 -328

A16 7490 -313

A17 7424 -304

VOLUME D (MD52C) 7498 -304

VOLUME F (MD76M) 1403 -306: WET TRASH

VOLUME G (MD80R) 1800 -346

VOLUME H (MD23R) 8068 -331: EVA ACCESS (INBD) 8065 -319; EVA ACCESS (OBD)

4575 -322

WMC (MAB2H) 0914 -332

5555 -346 EXT A/L 7404 -322: 2-EMUs; EXT A/L FLOOR 1791 -TBD; #729 ☒ SAFER (1); ☒ HAND CONTROLLER/ (DCM HARD MOUNT)

MD CEIL (PORT 1) 1816 -301 Z: #604 HCTB; #605 HCTB; #609 MSL GAS SUPPLY; # 912 FILTER KIT; # 918 FOOD CONTAINERS

MD CEIL (PORT 2) 1795 -309 C: # 603 REBA BATTERY; MWS/GIMBAL (2), CCC (3); ☒ COMM CAPS (G1/G2); LCVG/BIO, # 717 ECOK (G); # 915 GEL BRUSH KIT; PHASE VI GLOVES; SGANT CAPS

MD CEIL (STBD) 7440 -TBD: 5-MLE BAG/EMU COVER; #917 ORU BAG (LG); #406

MD FLOOR (PORT 2) 1814 -301 F: CDRA FOAM; #600 MPC (MSL SCA); #601 MPC (MSL SCA); #607 400MM LENS

MD FLOOR (PORT 1) 1796 -317 B: #602 RFTA (FILLED); #606 CD LIBRARY, CCC (1); #706 APEX WTR REFILL KIT; #707 ABRS AIR FLTR CART; # 733 TORQUE WRENCH; # 901 ABRS AIR FLTR CART; #914 BLOOD KITS

MD FLOOR (STBD 2) 1797 -304 E: FOAM IN PLACE OF ENTRY GARMENTS

MD FLOOR (STBD 1) 1796 -316 D: #608 RFTA (FILLED); WATER TRANS EQUIP; CWC/RESID H20; #913 ACTEX UNIT ASSY; #916 ISS GENERAL PURPOSE CADDY

ONLY LOCATIONS THAT CHANGED OR CONTAIN TRANSFER ITEMS ARE SHOWN

LIOH BOX: #724; 128 CANS: #30, #31; 129 CANS: #26, #31, #32

| CTB | HLF | SGL |
|---|---|---|
| LAUNCH | 8 | 9 |
| RETURN | TBD | TBD |

RUNWAY DESTOW

☒ SWAP

CTB CARGO TRANSFER BAG

HCTB HALF CARGO TRANSFER BAG

SEAT 7 1815 -301 REPLACEMENT BAG: # 908 EDV (QTY 1); PBA FOAM (6); # 919 FOOD CONTAINERS (3 MLE)

DWG NO. SGD32104455

CCMM: DELLA WYLIN 281-483-9790 /USR/DWGS/LOCKER/STS-132

NOTE: LOCKER LAYOUTS ARE FOR REFERENCE ONLY & ARE NOT RELEASED DWGS. FOR RELEASED DRAWING, REFER TO THE MIDDECK COMPARTMENT CONFIGURATION DRAWING FOR THIS FLIGHT (SGD32104455)

END OF PAGE 8 OF 8, MSG 084A

## 23-0688 (MSG 085) PDGF KEEP AWAY ZONES

Page 1 of 1 page

OBJECTIVE:

Power Data Grapple Fixture (PDGF) Keep Away Zones.

LOCATION:

A/L Crewlock

| WARNING |
| --- |
| Inadvertent contact with curvic couplings should be avoided, due to potential sharp edges. |

| CAUTION |
| --- |
| 1. The Grapple Fixture shaft is covered with dry-film lube. Contact with self or any equipment should be avoided and could cause damage to shaft or contamination of other equipment. |
| 2. LEE Target Rod is fragile. Loads exceeding 20 lbf could cause damage. |

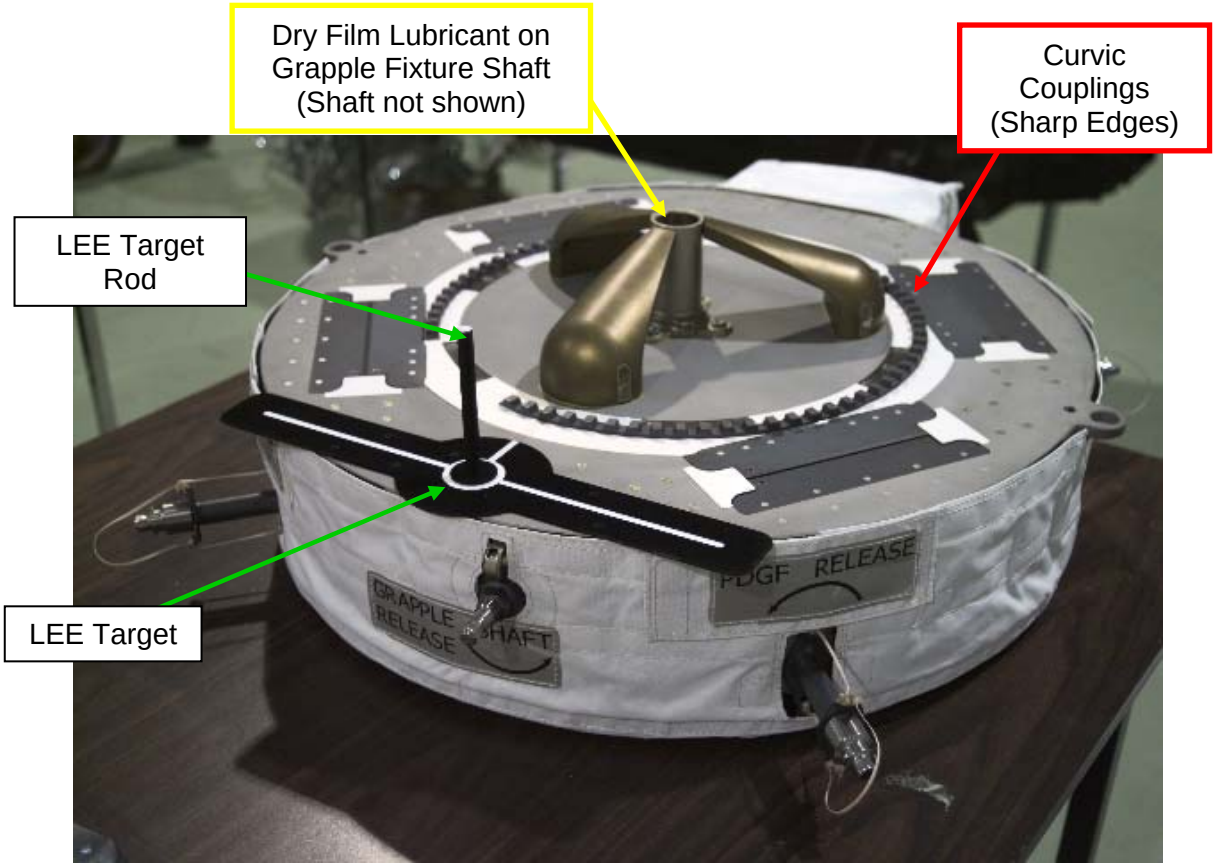


Figure 1.- PDGF (Note the Grapple Fixture Shaft is Missing in this Picture).