National Aeronautics and Space Administration

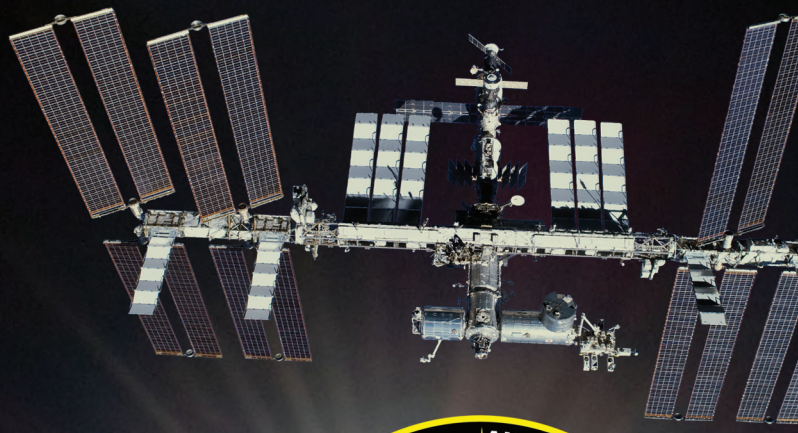

SPACE SHUTTLE MISSION

STS-132

Finishing Touches

PRESS KIT/May 2010

www.nasa.gov

United Space Alliance

CONTENTS

Section	Page
STS-132/ULF4 MISSION OVERVIEW	1
STS-132 TIMELINE OVERVIEW	13
MISSION PROFILE	17
MISSION OBJECTIVES	19
MISSION PERSONNEL	23
STS-132 CREW	25
PAYLOAD OVERVIEW	33
INTEGRATED CARGO CARRIER VERTICAL LIGHT DEPLOY (ICC-VLD)	33
MINI-RESEARCH MODULE-1	36
RENDEZVOUS & DOCKING	39
UNDOCKING, SEPARATION AND DEPARTURE	40
SPACEWALKS	43
EXPERIMENTS	51
SHORT-DURATION EXPERIMENTS TO BE PERFORMED ON STS-132/ULF4	51
SAMPLES/EXPERIMENTS TO BE RETURNED ON STS-132/ULF4	55
DETAILED SUPPLEMENTARY OBJECTIVES AND DETAILED TEST OBJECTIVES	57
HISTORY OF SPACE SHUTTLE ATLANTIS	59
SHUTTLE REFERENCE DATA	63
LAUNCH AND LANDING	81
LAUNCH	81
ABORT-TO-ORBIT (ATO)	81
TRANSATLANTIC ABORT LANDING (TAL)	81
RETURN-TO-LAUNCH-SITE (RTLS)	81
ABORT ONCE AROUND (AOA)	81
LANDING	81

Section **Page**

ACRONYMS AND ABBREVIATIONS 83

MEDIA ASSISTANCE 99

PUBLIC AFFAIRS CONTACTS 101

STS-132/ULF4 MISSION OVERVIEW

The space shuttle Atlantis' crew cabin and forward cargo bay are featured in this image photographed by an STS-129 crew member during the mission's first session of extravehicular activity.

The final planned mission of space shuttle Atlantis is scheduled for 12 days and begins at 2:20 p.m. EDT on Friday, May 14, with launch from the Kennedy Space Center. Its prime payloads destined for the International Space Station are the second of two Russian Mini-Research Modules and additional spare parts, including a set of batteries for the station's truss and a high-powered dish antenna assembly.

After launch on its 32nd mission, Atlantis will follow the standard two-day rendezvous profile leading to docking Sunday morning, May 16. On the way, the six-member crew will power up the Russian module and devote time inspecting the shuttle's Thermal Protection System for any damage that may have occurred during launch; check out spacesuits that will be used during three spacewalks; and test hardware used to assist with the rendezvous and docking.

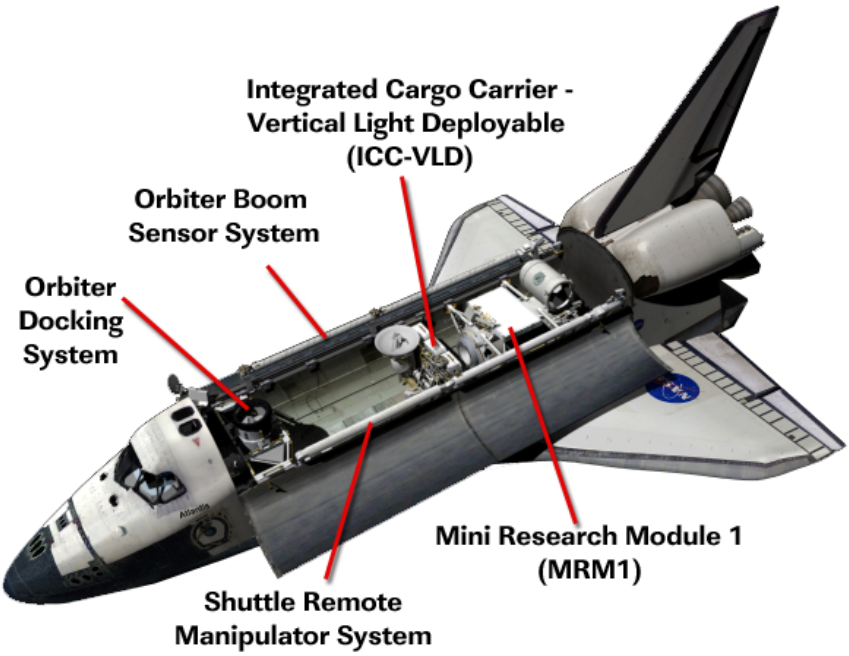

International Space Station Mass Numbers:

Before STS-132 docking, the International Space Station weighs 795,370 lbm (360,774 kg)

Integrated Cargo Carrier-Vertical Lightweight Deployable (ICC-VLD) launch mass is 7,532 lbm (3,417 kg)

ICC-VLD return mass is 6,466 lbm (2,933 kg)

Space-to-Ground Antenna (SGAnt) and boom will be added to station; mass is 645 lbm (293 kg)

Enhanced Orbital Replacement Unit (ORU) Temporary Platform (EOTP) is added to Special Purpose Dexterous Manipulator; mass is 421 lbm (191 kg)

Mini-Research Module-1 (MRM-1) launch mass is 17,670 lbm (8,015 kg)

Miscellaneous changes accounts for cargo transfer and water added to station: 1,413 lbm (641 kg)

After STS-132 undocks, the station will weigh 815,519 lbm (369,914 kg)

Mission "Quick Look"

- Launch: 2:20 p.m. EDT Friday, May 14
- OV-104 Atlantis (final flight of vehicle)
- Mission Duration: 12+0+2
- 7 full docked days
- Crew sleep shifts 4 hours earlier to support end of mission landing
- 3 spacewalks based out of the Quest Airlock
- 30 hours budgeted for shuttle middeck transfer

Leading the crew for STS-132 is Commander Ken Ham (Captain, U.S. Navy) flying for the second time following his first mission in May/June 2008 as pilot on the STS-124 flight of Discovery. He is joined by an all-veteran crew that includes Pilot Dominic "Tony" Antonelli (Captain, USN), Flight Engineer Michael Good (Colonel, USAF, Retired), Garrett Reisman, Steve Bowen (Captain, USN), and Piers Sellers.

Antonelli flew as pilot of Discovery's STS-119 mission in March 2009, which delivered the S6 Truss and solar array pair to the space station. Good flew last a year ago (May 2009) on the STS-125 flight of Atlantis to service the Hubble Space Telescope one final time. He conducted two spacewalks. Reisman spent 95 days in space – 90 aboard the space station as an Expedition 16/17 flight engineer. During his tour on the station, Reisman conducted one spacewalk. He launched with Endeavour's STS-123 crew in March 2008 and returned aboard Discovery in June 2008 at the conclusion of the STS-124 mission. Bowen flew aboard Endeavour on the STS-126 mission in November 2008 during which he conducted three spacewalks. Sellers flew previously on STS-112 aboard Atlantis in October 2002 and STS-121 on Discovery in July 2006. He, too, has performed three spacewalks.

While seated at the commander's station, astronaut Ken Ham, STS-132 commander, participates in a post insertion/de-orbit training session in the Crew Compartment Trainer (CCT-2) in the Space Vehicle Mock-up Facility at NASA's Johnson Space Center. Ham is wearing a training version of his shuttle launch and entry suit.

Aboard Atlantis in the payload bay is the Russian-built Mini-Research Module-1 (MRM-1) named "Rassvet," the Russian word for dawn or sunrise (pronounced Ross-vyet), along with a cargo carrier holding a spare set of batteries, a spare Ku Band antenna and components that will complement the Canadian-built Special Purpose Dextrous Manipulator – "Dextre."

While docked to the station, three crew members will share the spacewalking duties on the fourth, sixth and eighth mission days.

The day after launch, Antonelli and Sellers will share the duty of gathering sensor data and imagery using the shuttle's robotic arm and the Orbiter Boom Sensor System to transmit data to the ground for review to ensure the sensitive Thermal Protection System – particularly the wing leading edge panels and nose cap – was not damaged during launch. The same type of inspection will occur late in the mission after Atlantis departs the station to ensure no critical damage was incurred from micrometeoroid debris while in space.

NASA astronaut Tony Antonelli, STS-132 pilot, attired in a training version of his shuttle launch and entry suit, discusses training activities with United Space Alliance suit technician Andre Denard in the Space Vehicle Mock-up Facility at NASA's Johnson Space Center.

While the inspection takes place, Reisman, Bowen and Good will prepare the spacesuits, or Extravehicular Mobility Units, they will wear for their spacewalks to be conducted out of the station's Quest airlock.

Day three marks the arrival at the space station with rendezvous and docking. With Ham and Antonelli at the controls of Atlantis, the orbiter will close in for the final approach and docking to the station's forward docking port on the Tranquility module. After a series of jet firings to fine tune Atlantis' path to the station, the shuttle will arrive at a point about 600 feet directly below the station about an hour before docking. At that time, Ham will execute the R-Bar Pitch Maneuver (or RPM), a one-degree-per-second rotational "backflip" to enable station crew members to snap hundreds of detailed photos of the shuttle's heat shield and other areas of potential interest – another data point for imagery analysts to pore over in determining the health of the shuttle's Thermal Protection System.

Once the rotation is completed, Ham will maneuver Atlantis to a point 310 feet in front of the station before slowly closing in for docking. Less than two hours later, hatches will be opened between the two spacecraft and a combined crew of 12 will begin six days of work. Atlantis' crew will be working with Expedition 23 commander, Russian cosmonaut Oleg Kotov, and flight engineers T.J. Creamer, and Tracy Caldwell Dyson, both of NASA; Soichi Noguchi, a Japan Aerospace Exploration Agency astronaut; and cosmonauts Alexander Skvortsov and Mikhail Kornienko.

After docking, hatch opening and a safety briefing by the station crew for its newly arriving shuttle astronauts, robotics takes center stage as Sellers and Dyson operate the station's robotic arm (Canadarm2) to relocate the Integrated Cargo Carrier from Atlantis' payload bay to the station's Mobile Base System ahead of the next day's first spacewalk of the mission. This will preposition the components in close proximity to the worksite.

Flight day three ends with Reisman and Bowen sleeping in the Quest airlock as part of the overnight "campout" protocol that helps purge nitrogen from their bloodstreams, preventing decompression sickness that could occur otherwise. The campout is a standard procedure that will be repeated the night before each spacewalk.

Early on day four spacewalk preparations resume as Reisman (EV1) and Bowen (EV2) conduct the first of three outside excursions. EVA-1 tasks include installation of the spare Space-to-Ground Antenna and the Enhanced Orbital Replacement Unit Temporary Platform (EOTP) designed for stowage of spare parts. The two also will prepare new batteries for the other two planned spacewalks to shift brand new batteries from Atlantis to an outermost worksite on the P6 Truss. Reisman will wear an all-white spacesuit and Bowen will wear a suit with red stripes on the pant leg and upper backpack. Each spacewalk is budgeted to last approximately 6.5 hours.

extravehicular activity

- EVA 1 on Flight Day 4 (6.5 hrs) – Garrett Reisman (EV1) and Steve Bowen (EV2)
- EVA 2 on Flight Day 6 (6.5 hrs) – Steve Bowen (EV1) and Michael Good (EV2)
- EVA 3 on Flight Day 8 (6.5 hrs) – Michael Good (EV1) and Garrett Reisman (EV2)

The Russian Mini-Research Module-1 (MRM-1) installation on the station's Zarya module earth-facing docking port dominates day five of Atlantis' mission as robotics work takes center stage. The mission's primary objective involves using the station's robotic arm under control of Reisman and Sellers to remove the module from Atlantis and carefully install it on the Russian segment. Once capture is confirmed, an automatic docking sequence is initiated by the crew via a Russian segment laptop computer. Power from the station robotic arm to the module would then be terminated.

The 11,000-pound module is approximately 19 feet long and 8 feet in diameter and will increase the capabilities of the Russian segment of the space station by providing workstations for payloads and the conduct of experiments. MRM-1 will increase the technical and operational capabilities as well by providing accommodation for arriving and departing transport vehicles like the Soyuz and Progress spacecraft.

NASA astronaut Steve Bowen, STS-132 mission specialist, participates in an Extravehicular Mobility Unit spacesuit fit check in the Space Station Airlock Test Article in the Crew Systems Laboratory at NASA's Johnson Space Center. Astronaut Garrett Reisman, mission specialist, assists Bowen.

Stored inside the module for delivery to the station is one and a half tons of food, clothing and supplies. On its exterior are temporarily stowed items that will be relocated during future station spacewalks. An airlock on Rassvet will be attached to the Russian Multi-purpose Laboratory Module (MLM) after its launch atop a Russian Proton rocket in 2012. A European robot arm elbow joint also is attached to the outside and a Portable Work Post (PWP) to assist with the arm's activation, checkout and operation.

After the MRM-1 is installed, time is budgeted for focused inspection of Atlantis' heat shield if mission managers determine it is necessary. Reisman and Sellers would conduct the survey. If not required, the time allotted for focused inspection would free Ham, Antonelli and Good to help with middeck transfer activities.

The final robotic task for flight day five is using the station's robot arm Canadarm2 to grapple and hand off the shuttle's Orbiter Boom Sensor System to the shuttle arm. Canadarm2 will be prepositioned to assist with viewing for the next day's spacewalk.

Day six will see the second of the three planned spacewalks conducted by Bowen (EV1) and Good (EV2). Bowen again will be wearing the suit with red stripes and Good will wear a suit with broken barber pole stripes.

The focus of EVA-2 will be the removal and replacement of three of six batteries on the outermost truss segment on the port side of the station. These P6 truss batteries are the oldest of the station's exterior battery complement designed to store solar energy for use by station systems. The worksite will be prepared first – a task deferred from the previous mission of Discovery in April.

Russian Mini-Research Module-1 (MRM-1)

- Mini-Research Module-1 (Rassvet)
- Length 19.7 feet (6.0 meters)
- Diameter 7.7 ft (2.35 m)
- Mass (empty) 11,188 pounds (5,075 kilograms)
- Mass (loaded) 17,760 lbs (8,015 kg)
- ISS supplies 3,069 lbs (1,392 kg)
  1. Crew provisioning and support items
  2. Office supplies
  3. Food
  4. Crew Health Care System (CheCS) equipment
  5. Computers and accessories
  6. Equipment for cold storage and National Lab Pathfinder (NLP) experiment
- External items 2,889 lbs (1,310 kg)
  1. Spare elbow joint for ESA robot arm (ERA)
  2. Portable Work Post (PWP) for ERA activation, checkout and ops
  3. Radiator and airlock for future Russian Multi-purpose Lab Module (MLM)
- Pressurized volume 614 cubic feet (17.4 cubic meters)
- Habitable volume 207 cubic feet (5.8 cubic meters)

NASA astronaut Michael Good, STS-132 mission specialist, uses virtual reality hardware in the Space Vehicle Mock-up Facility at NASA's Johnson Space Center to rehearse some of his duties on the upcoming mission to the International Space Station. This type of virtual reality training allows the astronauts to wear a helmet and special gloves while looking at computer displays simulating actual movements around the various locations on the station hardware with which they will be working. David Homan assists Good.

The station robotic arm, under shared control of Reisman and Sellers, will maneuver the Integrated Cargo Carrier to the worksite for the spacewalkers to use as a platform and repository. Once the spacewalk is completed, the robotic arm will be maneuvered clear of the Solar Alpha Rotary Joint so that it can be commanded to rotate again.

Each battery measures 40 x 36 x 18 inches and weighs 375 pounds. The battery set to be replaced was launched as part of the P6 Truss segment delivered to the space station in November/December 2000.

P6 Battery

- 40" x 36" x 18"
- 375 pounds (170 kilograms)
- 38 lightweight Nickel Hydrogen cells
- Provides 8 kilowatts of electrical power (two batteries connected in series)
- 6.5 year average design life
- Can exceed 38,000 charge/discharge cycles at 35 percent depth of discharge

Flight day seven focuses on hatch opening and entry into the MRM-1 following leak checks. After the atmosphere is scrubbed, the docking mechanism will be removed and hatch left slightly ajar. Actual ingress into the module will wait until after Atlantis departs and the station crew is back on its own. This day also includes some crew off duty time ahead of day eight's third spacewalk.

The third and final planned spacewalk of the mission will be conducted on flight day eight by Good (EV1) and Reisman (EV2). Good will wear a suit with the barber pole red stripes and Reisman once again will be wearing a suit with no markings.

Their focus will be on removal and replacement of the final three batteries on the P6 truss and returning the full set of old batteries to the Integrated Cargo Carrier for eventual return to Atlantis' payload bay and return home.

Time permitting, the spacewalkers will retrieve a new grapple fixture for the station's robot arm from the sidewall of Atlantis and install it on the station. The Power Data Grapple Fixture (PDGF) will provide an additional active location from which the robot arm can operate.

With the outside work complete, day nine focuses on cleanup by relocating the Integrated Cargo Carrier from its temporary location on the station's Mobile Base System to the shuttle's payload bay for return home.

If required, the station's orbit will be raised slightly using subtle thruster firings on Atlantis followed by some off duty time for the crews. A placeholder in the timeline is budgeted for Ham and Antonelli should the station program elect to exercise the reboost option.

Attired in a training version of his shuttle launch and entry suit, astronaut Piers Sellers, STS-132 mission specialist, participates in a training session on the middeck of the crew compartment trainer (CCT-2) in the Space Vehicle Mockup Facility at NASA's Johnson Space Center.

The crews of Atlantis and the station will bid farewell to one another early on flight day 10 after six full days of joint operations (not including docking and undocking days). Shortly after undocking Antonelli will be at the controls of the shuttle for the traditional one lap fly around to document the new configuration of the station before departing the area.

Left behind will be the International Space Station with its newest module and a mass in space of more than 815,000 pounds (370,000 kilograms).

After Atlantis departs, the station crew will turn its attention to preparations for the next crew arrival on a Russian Soyuz spacecraft and spacewalks to outfit the MRM-1 and installation of a PDGF on the Zarya module.

On flight day 11 Ham, Antonelli, Reisman and Sellers will again use the OBSS to inspect the wing leading edges and nose cap for any evidence of damage due to micrometeoroid debris before return home. The data gathered will be shipped to the ground for review by imagery experts in Mission Control – the same group that pores over imagery after launch.

The day before landing is set aside for the traditional tests of hydraulics, flight control systems and thruster jets ahead of landing. With cabin stowage activities ongoing in parallel, Ham, Antonelli and Good will pressurize the hydraulic system to test the movable surfaces on the wings and tail and fire steering jets setting the stage for Atlantis' return home.

After Atlantis Departs

- 21 Soyuz undocks and lands June 2 ending Expedition 23
- Oleg Kotov, Soichi Noguchi and T.J. Creamer return after 163 days in space leaving Alexander Skvortsov, Tracy Caldwell Dyson and Mikhail Kornienko behind to begin Expedition 24
- 23 Soyuz launches June 16 and docks 18
- Fyodor Yurchikhin, Doug Wheelock and Shannon Walker join Expedition 24
- 23 Soyuz Relocate June 22
- The moves Soyuz from SM Aft to MRM-1 in preparation for 38P docking.
- Russian Progress 38 Supply Craft launches June 30 and docks July 2
- STS-134/ISS ULF6 Preparations
- U.S. Spacewalk July 8
- The primary task is to install a Power and Data Grapple Fixture (brought inside during STS-132 for outfitting) on the Zarya module (Dyson and Wheelock)
- Russian Spacewalk July 23
- The primary tasks will focus on MRM-1 activation. (Kornienko and Yurchikhin)

Attired in training versions of their shuttle launch and entry suits, the STS-132 crew members take a brief break for a portrait in the Space Vehicle Mock-up Facility at NASA's Johnson Space Center. NASA astronaut Ken Ham, commander, holds the STS-132 mission logo. Also pictured (from the left) are NASA astronauts Piers Sellers, Garrett Reisman, both mission specialists; Tony Antonelli, pilot; Michael Good and Steve Bowen, both mission specialists.

The STS-132 mission ends with landing on flight day 12 back at the Kennedy Space Center's Shuttle Landing Facility. Landing currently is planned for the early morning of May 26 after 12 days in space. STS-132 is the 132nd space shuttle mission; the 34th shuttle flight devoted to space station assembly and operation and the 32nd and final planned flight of Atlantis.

This page intentionally blank

STS-132 TIMELINE OVERVIEW

Flight Day 1

- Launch
- Payload Bay Door Opening
- Ku-band Antenna Deployment
- Shuttle Robotic Arm Activation and payload bay survey
- Umbilical Well and Handheld External Tank Photo and TV Downlink

Flight Day 2

- Atlantis' Thermal Protection System Survey with Shuttle Robotic Arm/Orbiter Boom Sensor System (OBSS)
- Extravehicular Mobility Unit Checkout
- Centerline Camera Installation
- Orbiter Docking System Ring Extension
- Orbital Maneuvering System Pod Survey
- Rendezvous tools checkout

Flight Day 3

- Rendezvous with the International Space Station
- Rendezvous Pitch Maneuver Photography of Atlantis' Thermal Protection System by Expedition 23 crew members Creamer and Kotov
- Docking to Harmony/Pressurized Mating Adapter-2
- Hatch Opening and Welcoming
- Canadarm2 grapple of Integrated Cargo Carrier, unberthing from Atlantis' payload bay and temporary park on the Mobile Base System's payload attachment device
- Spacewalk 1 preparations by Reisman and Bowen
- Spacewalk 1 procedure review
- Spacewalk 1 campout by Reisman and Bowen in the Quest airlock

Flight Day 4

- Spacewalk 1 by Reisman and Bowen (Installation of the backup Space-to-Ground Antenna on the Z1 truss and installation of a new tool platform on the Dextre robot)

Flight Day 5

- Unberth of the Russian Rassvet module from Atlantis' payload bay and installation on the Earth-facing port of the Zarya module
- Canadarm unberth of the Orbiter Boom Sensor System and handoff to the shuttle's robotic arm
- Focused inspection of Atlantis' thermal protection heat shield, if required
- Spacewalk 2 preparations by Bowen and Good
- Spacewalk 2 procedure review
- Spacewalk 2 campout by Bowen and Good in the Quest airlock

Flight Day 6

- Canadarm 2 removal of the Integrated Cargo Carrier from the Mobile Base System attachment device and relocation at the Spacewalk 2 worksite
- Spacewalk 2 by Bowen and Good (remove and replace three of the six batteries in the P6 truss)

Flight Day 7

- Middeck cargo transfer from Atlantis to the space station
- Rassvet/Zarya leak checks and Rassvet hatch opening for air duct installation (complete outfitting of Rassvet will be delayed until after Atlantis departs)
- Crew off duty period
- Spacewalk 3 preparations by Reisman and Good
- Spacewalk 3 procedure review
- Spacewalk 3 campout by Reisman and Good in the Quest airlock

Flight Day 8

- Spacewalk 3 by Reisman and Good (remove and replace the last three batteries on the P6 truss and, if time permits, retrieve a spare Power and Data Grapple Fixture from the sidewall of Atlantis' payload bay to be brought inside the station)
- Canadarm 2 returns the Integrated Cargo Carrier to the Mobile Base System attachment device

Flight Day 9

- Canadarm 2 berths the Integrated Cargo Carrier in Atlantis' cargo bay
- Middeck cargo transfer from Atlantis to the station
- Crew off duty time

Flight Day 10

- Final middeck cargo transfer from Atlantis to the station
- Rendezvous Tool Checkout
- Joint Crew News Conference
- Farewells and Hatch Closure
- Centerline Camera installation
- Atlantis undocking from station and flyaround
- Final separation from the station

Flight Day 11

- OBSS late inspection of Atlantis' thermal heat shield
- OBSS berth

Flight Day 12

- Cabin stowage
- Flight Control System checkout
- Reaction Control System hot-fire test
- Deorbit Preparation Briefing
- Ku-band antenna stowage

Flight Day 13

- Deorbit preparations
- Payload Bay Door closing
- Deorbit burn
- KSC Landing

This page intentionally blank

MISSION PROFILE

CREW

Commander:	Ken Ham
Pilot:	Tony Antonelli
Mission Specialist 1:	Garrett Reisman
Mission Specialist 2:	Michael Good
Mission Specialist 3:	Steve Bowen
Mission Specialist 4:	Piers Sellers

LAUNCH

Orbiter:	Atlantis (OV-104)
Launch Site:	Kennedy Space Center Launch Pad 39A
Launch Date:	May 14, 2010
Launch Time:	2:20 p.m. EDT (Preferred In-Plane launch time for 5/14)
Launch Window:	10 Minutes
Altitude:	22 Nautical Miles (140 Miles) Orbital Insertion; 190 NM (218 Miles) Rendezvous
Inclination:	51.6 Degrees
Duration:	11 Days 18 Hours 23 Minutes

VEHICLE DATA

Shuttle Liftoff Weight:	4,519,769 pounds
Orbiter/Payload Liftoff Weight:	263,100 pounds
Orbiter/Payload Landing Weight:	209,491 pounds
Software Version:	OI-34

Space Shuttle Main Engines:

SSME 1:	2052
SSME 2:	2051
SSME 3:	2047
External Tank:	ET-136
SRB Set:	BI-143
RSRM Set:	111

SHUTTLE ABORTS

Abort Landing Sites

RTLS:	Kennedy Space Center Shuttle Landing Facility
TAL:	Primary – Zaragoza, Spain. Alternates – Moron, Spain and Istres, France
AOA:	Primary – Kennedy Space Center Shuttle Landing Facility Alternate – White Sands Space Harbor

LANDING

Landing Date:	May 26, 2010
Landing Time:	08:44 a.m. EDT
Primary landing Site:	Kennedy Space Center Shuttle Landing Facility

PAYLOADS

Mini-Research Module-1
Integrated Cargo Carrier

This page intentionally blank

MISSION OBJECTIVES

MAJOR OBJECTIVES

1. Rendezvous and dock space shuttle Atlantis to the station's Pressurized Mating Adapter (PMA)-2 and perform mandatory safety briefing for all crew members

2. Activate and check out Mini-Research Module-1 (MRM-1) in the shuttle payload bay

3. Support dual docked operations for 23S docking (if required)

4. Perform robotic installation of the MRM-1 to the Zarya nadir port

   – Closure of a minimum of one set of hooks in the MRM-1/Zarya nadir interface

   – Confirmation of electrical connectivity through the MRM-1/Zarya Interface

5. Transfer mandatory quantities of water from the shuttle to the space station per Flight Utilization Logistics Flight (ULF) 4 Transfer Priority List (TPL)

6. Transfer critical items per Flight ULF4 TPL

7. Deploy Integrated Cargo Carrier – Vertical Lightweight Deployable-2 (ICC-VLD-2) with Orbital Replacement Units (ORUs) from the payload bay and stow on Mobile Transporter (MT) Payload ORU Accommodation (POA)

8. Install the Space-to-Ground Antenna (SGAnt) and SGAnt boom on Z1 truss

9. Install the Enhanced ORU Temporary Platform (EOTP) on the Special Purpose Dexterous Manipulator (SPDM)

10. Replace the six P6 channel 4B batteries currently in orbit with new batteries from the ICC-VLD-2 and return the old batteries on ICC-VLD-2

11. Return the ICC-VLD2 with old batteries to the shuttle payload bay

12. Transfer mission success items per the Flight ULF4 TPL

13. Remove the Payload Data Grapple Fixture (PDGF) from the shuttle sidewall carrier and transfer to the space station

14. Perform Intravehicular Activity (IVA) tasks to allow for return of in-orbit hardware

15. Perform daily station payload status checks, as required

16. Perform nonrecoverable station utilization/science activities (not listed in priority order):

    – Bisphosphonates

    – Double Coldbag (DCB) packing

    – Waving and Coiling of Arabidopsis Roots at Different g-levels (WAICO) bag packing

    – General Laboratory Active Cryogenic ISS Experiment Refrigerator (GLACIER)

    – Microbiology-2 (Micro-2)

- Mycological Evaluation of Crew Exposure to ISS Ambient Air (Myco)
- National Lab Pathfinder (NLP) vaccine-9
- SPINAL long (station U.S. Operating Segment (USOS) crew) and SPINAL short (shuttle crew)
- Fish Scales

17. Transfer additional quantities of water from the shuttle to station per ULF4 TPL
18. Transfer remaining cargo items per Flight ULF4 TPL
19. The following spacewalk tasks are deemed to fit within the existing extravehicular activity (EVA) timelines; however, they may be deferred if the EVA is behind schedule. The EVA will not be extended to complete these tasks:
    - Install EOTP input drive mechanism and two fuse ORUs
20. Perform daily middeck status checks to support payloads
21. Perform remaining station payload research operations tasks
    - SDBI 1634 SLEEP/WAKE actigraphy and light exposure during spaceflight ("Sleep-Short")
22. Perform Russian resupply
23. Transfer nitrogen from the shuttle to the station's airlock High Pressure Gas Tanks (HGPTs)
24. Transfer oxygen from the shuttle to the station's airlock HGPTs as consumables allow
25. Perform imagery survey of the station's exterior during fly-around after undock
26. Perform reboost of the station with the shuttle if mission resources allow and are consistent with station trajectory analysis and planning
27. Perform program-approved EVA get-ahead tasks. The following EVA get-ahead tasks do not fit in the existing EVA timelines; however, the EVA team will be trained and ready to perform them, should the opportunity arise:
    - Port 3 Crew and Equipment Transfer/Translation Aid (CETA) light
    - Port 4/Port 5 NH3 jumper
28. Perform program-approved IVA get-ahead tasks. The following IVA get-ahead tasks do not fit in the existing IVA timelines; however, the IVA team will be trained and ready to perform should the opportunity arise:
    - Ingress MRM-1
29. Perform Station Development Test Objective (SDTO) 13005-U, ISS Structural Life Validation and Extension, during MRM-1 installation
30. Perform SDTO 13005-U, ISS Structural Life Validation and Extension, during shuttle-mated reboost

31. Perform SDTO 13005-U, ISS Structural Life Validation and Extension, during ULF4 docking

32. Perform SDTO 13005-U, ISS Structural Life Validation and Extension, during ULF4 undocking, if crew time available

33. Perform payload of opportunity operations to support Maui Analysis of Upper Atmospheric Injections (MAUI), Shuttle Exhaust Ion Turbulence Experiment (SEITE), Shuttle Ionospheric Modification with Pulsed Local Exhaust (SIMPLEX) and Ram Burn Observations (RAMBO-2)

This page intentionally blank

MISSION PERSONNEL

KEY CONSOLE POSITIONS FOR STS-132

	Flt. Director	CAPCOM	PAO
Ascent	Richard Jones	Charlie Hobaugh TBD (Wx)	Kyle Herring
Orbit 1 (Lead)	Mike Sarafin	Chris Cassidy	Kyle Herring
Orbit 2	Chris Edelen	Stan Love	Josh Byerly
Planning	Ginger Kerrick	Shannon Lucid	Nicole Cloutier-Lemasters
Entry	Tony Ceccacci	Charlie Hobaugh TBD (Wx)	Josh Byerly
Shuttle Team 4	TBD	N/A	N/A
ISS Orbit 1	Holly Ridings	Zach Jones	N/A
ISS Orbit 2 (Lead)	Emily Nelson	Steve Swanson	N/A
ISS Orbit 3	Dina Contella	Rob Hayhurst	N/A
Station Team 4	Royce Renfrew		

JSC PAO Representative at KSC for Launch – Kelly Humphries

KSC Launch Commentator – George Diller

KSC Launch Director – Mike Leinbach

NASA Launch Test Director – Jeremy Graeber

This page intentionally blank

STS-132 CREW

The STS-132 mission will be the 32nd flight of the space shuttle Atlantis. The primary STS-132 mission objective is to deliver the Russian-made MRM-1 (Mini-Research Module) to the International Space Station. Atlantis also will deliver a new communications antenna and a new set of batteries for one of the station's solar arrays. The STS-132 mission patch features Atlantis flying off into the sunset as the end of the Space Shuttle Program approaches. However, the sun is also heralding the promise of a new day as it rises for the first time on a new station module, the MRM-1, named "Rassvet," the Russian word for dawn.

Short biographical sketches of the crew appear in this package.

More detailed biographies are available at: http://www.jsc.nasa.gov/bios/

The STS-132 crew members, shown clockwise, are NASA astronauts Ken Ham (bottom), commander; Garrett Reisman and Michael Good, mission specialists; Tony Antonelli, pilot; and Piers Sellers and Steve Bowen, mission specialists.

STS-132 CREW BIOGRAPHIES

Ken Ham

Ken Ham, a captain in the U.S. Navy, will command STS-132 and its crew. As commander, he will have overall responsibility for the safety and execution of the mission and will oversee the crew and ensure mission objectives are met. He will fly Atlantis during its rendezvous and docking to the space station and landing back on Earth.

Before being selected by NASA in 1998, Ham was temporarily assigned to the NASA-JSC zero-g office at Ellington Field in Houston where he flew as a crew member on the NASA zero-g research aircraft.

In 2008, Ham served as pilot of STS-124, which delivered the Kibo pressurized science laboratory to the space station. He has spent more than 13 days in space and has logged more than 5,000 flight hours in more than 40 different types of aircraft.

Tony Antonelli

A commander in the U.S. Navy, Tony Antonelli will pilot STS-132. He will assist Ham with rendezvous and landing, and will fly the orbiter during undocking and the flyaround.

This will be Antonelli's second trip to space. Selected as a pilot by NASA in 2000, Antonelli has accumulated more than 3,600 hours of flight time in more than 41 different kinds of aircraft.

He served as pilot of STS-119 in 2009, which delivered the S6 Integrated Truss Segment and the final pair of power-generating solar array wings to the space station.

Garrett Reisman

Garrett Reisman, who holds a Ph.D. in mechanical engineering, will serve as mission specialist 1 on STS-132. Following Astronaut Candidate Training in 1998, he completed work in the Astronaut Office Robotics Branch, primarily working on the space station robotic arm, and then later served in the Astronaut Office Advanced Vehicles Branch, working on the displays and checklists to be used in the next-generation space shuttle cockpit. In 2003, he was a crew member on NEEMO V, living on the bottom of the sea in the Aquarius habitat for two weeks.

In 2008, Reisman completed his first spaceflight, spending more than three months in space and accruing more than seven hours of extravehicular activity, or EVA, time. He launched to space with the STS-123 crew and returned home on STS-124. He served with the Expedition 16 and Expedition 17 crews as a flight engineer.

Michael Good

A retired colonel in the U.S. Air Force, Michael Good will be making his second trip to space on STS-132, serving as mission specialist 2.

After being selected by NASA as a mission specialist in 2000, Good was assigned technical duties in the Astronaut Office Advanced Vehicles Branch and the Space Shuttle Branch. In 2009, he served on the crew of STS-125, the final space shuttle mission to the Hubble Space Telescope, spending nearly 13 days in space and logging almost 16 hours of EVA time during two spacewalks.

Steve Bowen

The first-ever submarine officer selected by NASA, Steve Bowen, a captain in the U.S. Navy, is assigned to serve as mission specialist 3 on STS-132.

Upon completion of Astronaut Candidate Training, Bowen was initially assigned technical duties in the Astronaut Office Station Operations Branch. He completed his first spaceflight aboard STS-126 in 2008 where he spent more than 15 days in space and logged more than 19 hours of EVA time in three spacewalks.

Piers Sellers

Veteran astronaut Piers Sellers will serve as mission specialist 4 on STS-132. His two previous spaceflights include STS-112 in 2002 and STS-121 in 2006.

Selected as an astronaut candidate by NASA in 1996, Sellers was initially assigned technical duties in the Astronaut Office Computer Support Branch, then moved to the Astronaut Office Space Station Branch during which he worked part time in Moscow as a technical liaison on station computer software.

He has logged more than 559 hours in space, including nearly 41 EVA hours in six spacewalks.

PAYLOAD OVERVIEW

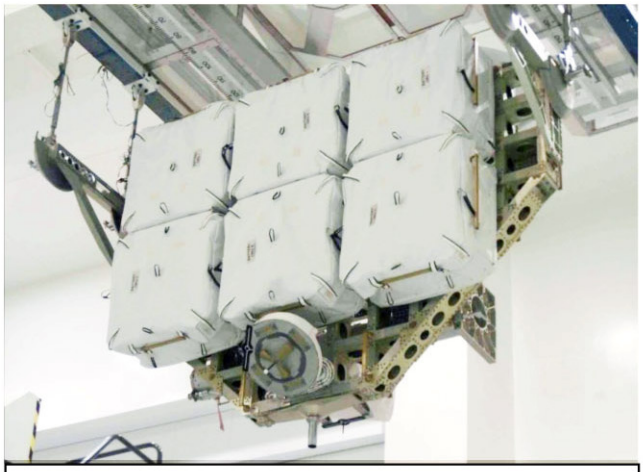

BATTERIES

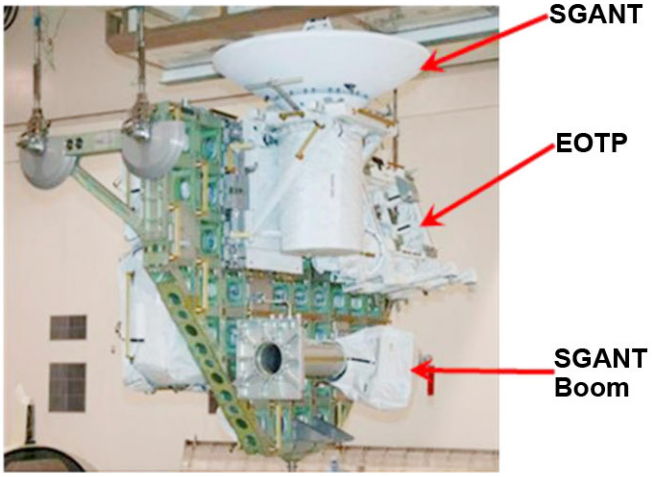

INTEGRATED CARGO CARRIER VERTICAL LIGHT DEPLOY (ICC-VLD)

Astronauts use the Integrated Cargo Carrier (ICC) to help transfer unpressurized cargo such as Orbital Replacement Units (ORUs) from the space shuttle to the International Space Station and from the station to worksites on the truss assemblies. The carrier also is used to return items for refurbishment.

The Astrium ICC, formerly provided by SPACEHAB Inc., is an unpressurized flatbed pallet and keel yoke assembly housed in the shuttle's payload bay. Constructed of aluminum, it is approximately 8 feet long (105 inches), 13 feet wide (165 inches) and 10 inches thick, and carries cargo on both the top and bottom faces of the pallet. Using modular elements, several pallet configurations are available, accommodating various mass capabilities and cargo envelopes.

The ICC configuration flown on STS-132 is called the ICC – VLD and provides heater power and electrical connections for the ORUs. The empty weight of the ICC – VLD is 2,645 pounds. The total weight of the ORUs and ICC – VLD is approximately 8,330 pounds. The STS-132 assembly mission ICC – VLD will carry replacement components and spare parts for the space station.

The ICC is grabbed by the space shuttle and the space station robotic arms during its move from the payload bay. It is attached to the station's mobile transporter and can be held at the various worksites by the station's robotic arm while the ORUs are transferred.

The ICC – VLD will carry six battery ORUs for the Port 6 (P6) Integrated Equipment Assembly (IEA). The P6 containing the initial station high-power components was launched on Nov. 30, 2000. The IEA contains 12 Battery Subassembly ORUs (six batteries) that are charged from the solar arrays during sunlit

periods and provide station power during eclipse and maintenance periods. Previously, six of the original P6 battery ORUs were changed out during the STS-127 (2J/A) mission. Thirty-eight Individual Pressure Vessel (IPV) Nickel Hydrogen (Ni-H2) battery cells are connected in series and packaged in a battery ORU. Two ORUs are connected in series, utilizing a total of 76 cells to form one battery. Each battery is designed to deliver more than 25 amps in a low-demand orbit to as high as 75 amps to meet short peaking load requirements at a battery operating voltage range of 76 to 123 V dc. The batteries will be replaced during two spacewalks and the old ones will be returned. The six batteries weigh 2,204 pounds and have a design life of approximately six and a half years.

In addition to the batteries, the ICC – VLD will have one Space-to-Ground Antenna (SGANT), one SGANT boom, and one Enhanced Orbital Replacement Unit Temporary Platform (EOTP). These components will be stored on External Stowage Platform 3 (ESP-3) on the Port 3 truss. When the ICC – VLD with the old batteries is returned to Earth aboard the space shuttle, it will weigh 6,017 pounds.

The SGANT provides Ku band communication between the space station and the Tracking Data and Relay (TDRS) satellites for payload data, video to the ground and the crew Orbiter Communications Adapter (OCA). The OCA allows for telephone calls, emails and other two-way communications services. The SGANT currently is mounted on top of the Zenith one (Z1) truss. Eventually, a second Z1 boom will be mounted with an additional SGANT in a standby backup mode. If ever needed, it could be brought on line quickly. The SGANT dish measures 6 feet (72 inches) in diameter, and 6 feet (72 inches) high, including gimbals, and weighs 194 pounds.

The SGANT Orbital Replacement Unit (ORU), the SGANT Flight Support Equipment (FSE) Installation Kit, and the Small Adapter Plate Assembly (SAPA) comprise the Integrated Assembly, SGANT FSE Installation Kit (hereafter referred to as the Integrated Assembly). The installation kit is composed of hardware that provides a mechanical, structural and electrical bonding interface between the SGANT ORU and the SAPA. The SGANT FSE Installation Kit provides thermal conditioning of the SGANT ORU. The hardware is extravehicular activity (EVA) compatible. The FSE Installation Kit is used to support transportation of SGANT ORUs from Earth to orbit, cargo transfer to the in-orbit position on the International Space Station, and return from orbit to Earth. When used with the proper carrier or storage platform, the SGANT FSE Installation Kit can be used to support storage of the SGANT ORU at in-orbit station external payload sites. It can be separated from the Passive Flight Releasable Attachment Mechanism (PFRAM) Interface Plate (IP) Assembly mounted to the launch carrier, or the station stowage platform.

The SGANT Boom Assembly provides power, data, and structural support to the redundant SGANT and the Space-to-Ground Transmit Receive Controller (SGTRC) units. The SGANT Boom Assembly will attach to the Integrated Truss Structure (ITS) Z1 berthing face at the original SGANT launch location for transmission of mechanical loads and vibrations. It will position and align the redundant SGANT to be ready for use should the primary SGANT fail in orbit. The Boom Attached Cables (BAC) provide an electrical

interface to the SGANT and SGTRC units for power, 1553 command and control data, and Radio Frequency (RF) signals and Intermediate Frequency (IF) signals carrying International Space Station space-to-ground communications. The waveguide is also attached to the Boom Assembly and provides a conduit for Radio Frequency (RF) signals between the SGTRC and SGANT.

The Enhanced ORU Temporary Platform (EOTP) is hardware supporting the operation of the Special Purpose Dexterous Manipulator (SPDM). It is built by MDA and provided as NASA Government Furnished Equipment. Return of the EOTP is not planned for this mission. The EOTP has a Passive FRAM interface, which is used to transfer launch loads. The interface structure between EOTP and the ICC-VLD is Flight Support Equipment (FSE) developed and owned by Astrium-ST. It interfaces with the PFRAM of the EOTP. The EOTP does not require power or data interfaces while on the ICC.

ICC-VLD Launch Configuration

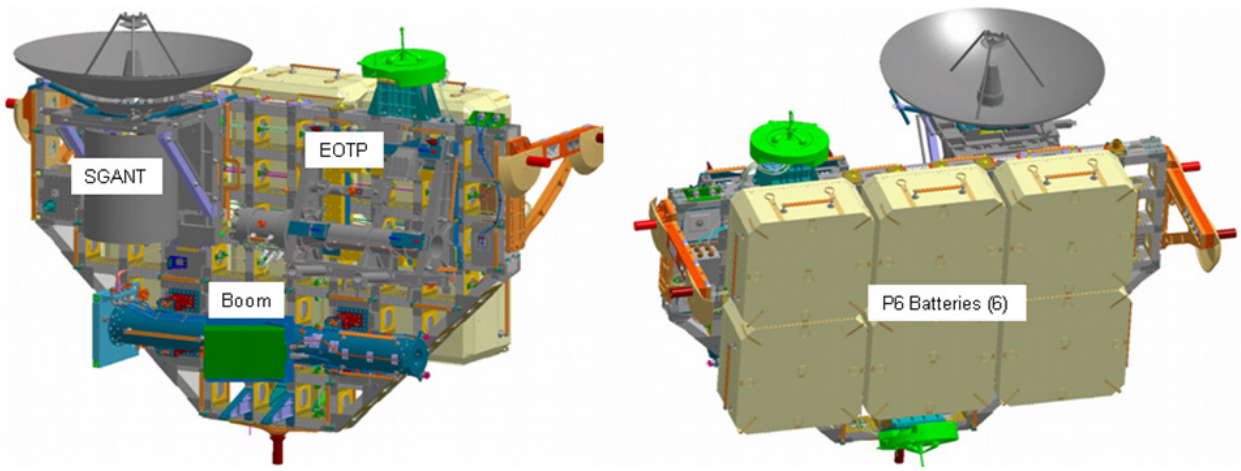

ICC-VLD Return Configuration

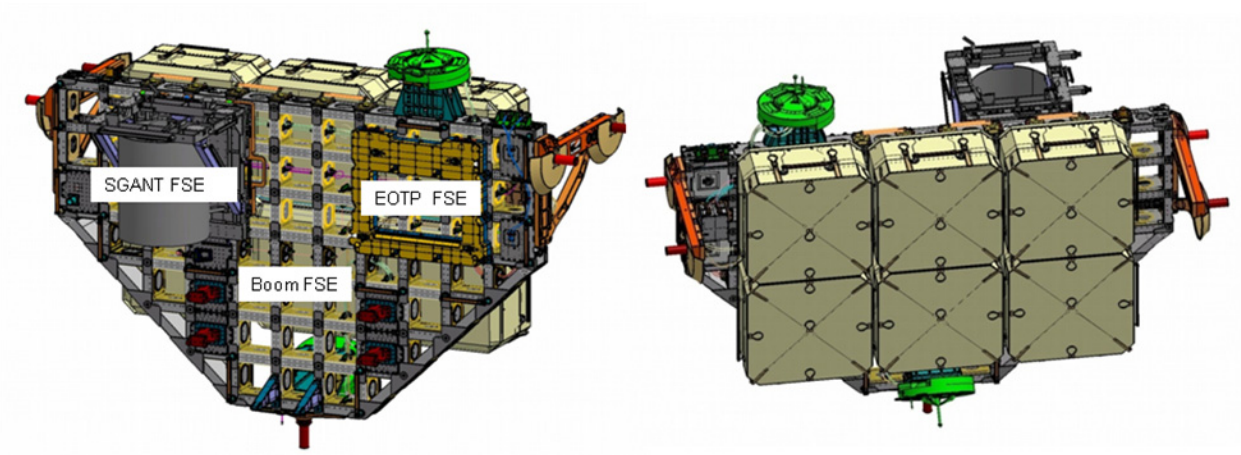

MINI-RESEARCH MODULE-1

The Mini-Research Module-1 (MRM-1) is a new Russian module that will be delivered to the International Space Station by space shuttle Atlantis on the STS-132 mission.

MRM-1, which has been named Rassvet, a Russian word meaning dawn, will be used primarily for cargo storage and some payload operations. The module will be berthed to the Earth-facing port of the Zarya module using the station robotic arm on Flight Day 5.

Developed at Korolev Rocket and Space Corp. Energia (RSC Energia), MRM-1 also will provide a fourth docking port on the Russian operation segment of the station for the docking of Soyuz and Progress vehicles.

MRM-1 is 19.7 feet long (6 meters), has a maximum exterior diameter of 7.7 feet (2.35 meters) and weighs 11,188 pounds (5,075 kilograms). For its flight to the station, the MRM-1 will carry a total of 6,482 pounds (2,940 kilograms) of cargo on its internal and exterior stowage locations while in Atlantis' payload bay.

On its shell, Rassvet will carry a spare elbow joint for the European Robotic Arm (ERA) and outfitting equipment for the Russian Multi-Purpose Laboratory Module (MLM), which is scheduled to launch on a Russian rocket in 2012. The outfitting equipment will include a radiator, an airlock for payloads, and a Portable Work Post (PWP) that will provide a spacewalk worksite for ERA activation, checkout, and operations.

Once MRM-1 is installed on its Zarya port, its 614 cubic feet (17 cubic meters) of pressurized volume, will increase the space station's total pressurized volume to 29,561 cubic feet (837 cubic meters), and its 207 cubic feet (5.8 cubic meters) will increase the total habitable volume to 12,705 cubic feet (360 cubic meters). After installation and Atlantis' departure, the station's total mass will be 815,519 pounds (369,914 kilograms).

MRM-1 (Rassvet) Basic Specifications:

Module launch mass:	11,188 pounds (5,075 kilograms)
Total launch mass:	17,760 pounds (8,015 kilograms), including cargo (European Robotic Arm for Columbus, airlock for Multipurpose Laboratory Module and a portable workplace)
Maximum hull diameter:	7.7 feet (2.35 meters)
Hull length between docking assembly planes:	19.7 feet (6.0 meters)
Pressurized volume:	614 cubic feet (17.4 cubic meters)
Habitable volume:	207 cubic feet (5.85 cubic meters)

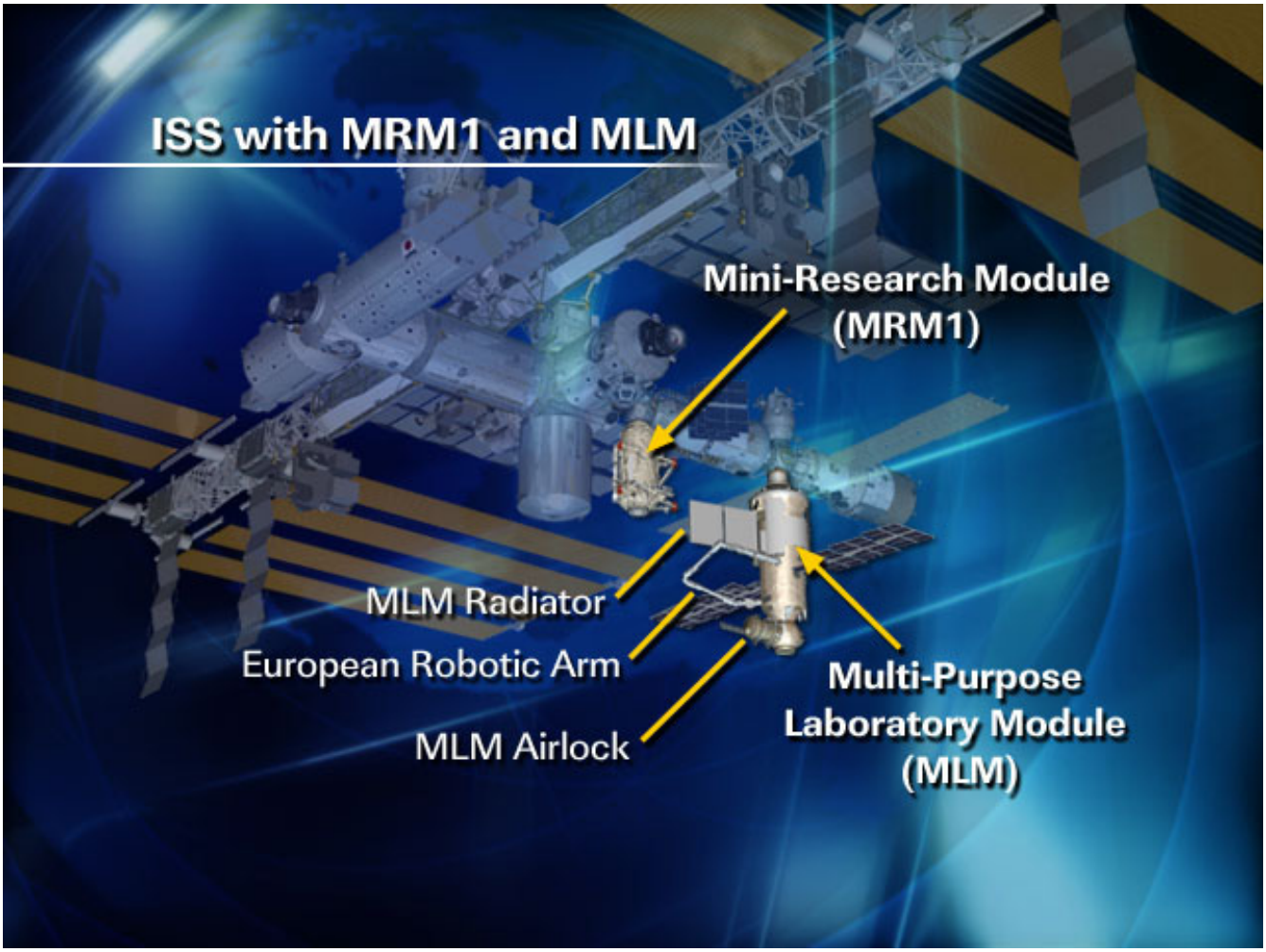
ISS with MRM1 and MLM
Mini-Research Module
(MRM1)
MLM Radiator
European Robotic Arm
MLM Airlock
Multi-Purpose
Laboratory Module
(MLM)

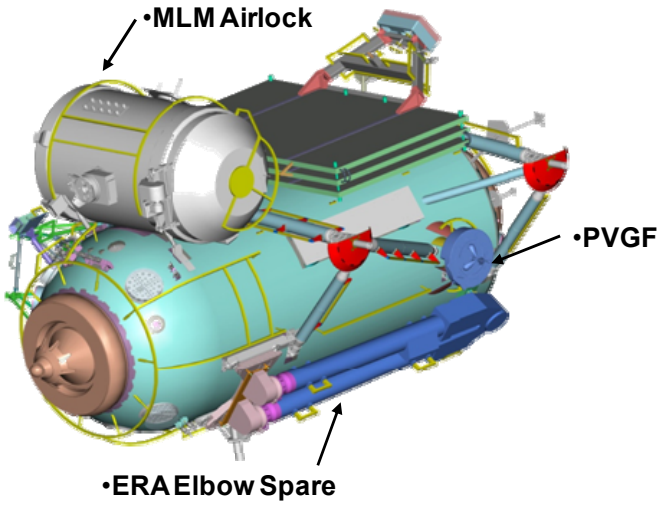

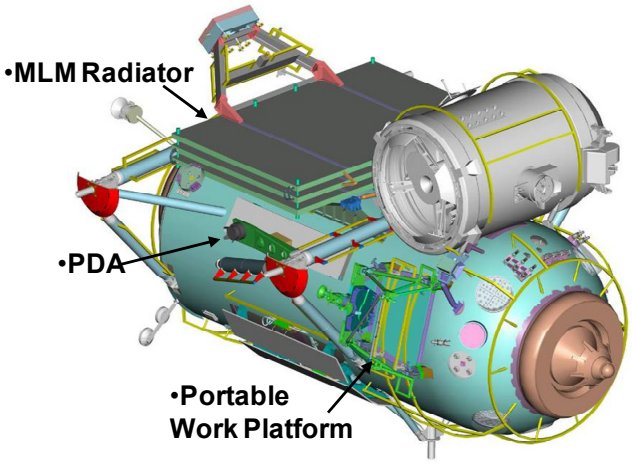

MRM-1 Overview

- Mini-Research Module-1 (MRM-1) was manufactured from the residual Dynamic Test Article of the Science Power Platform (SPP)
- MLM outfitting hardware is mounted externally on MRM-1
- 3,086 pounds of NASA cargo launches inside (211 cubic feet of usable on-orbit stowage volume)

RENDEZVOUS & DOCKING

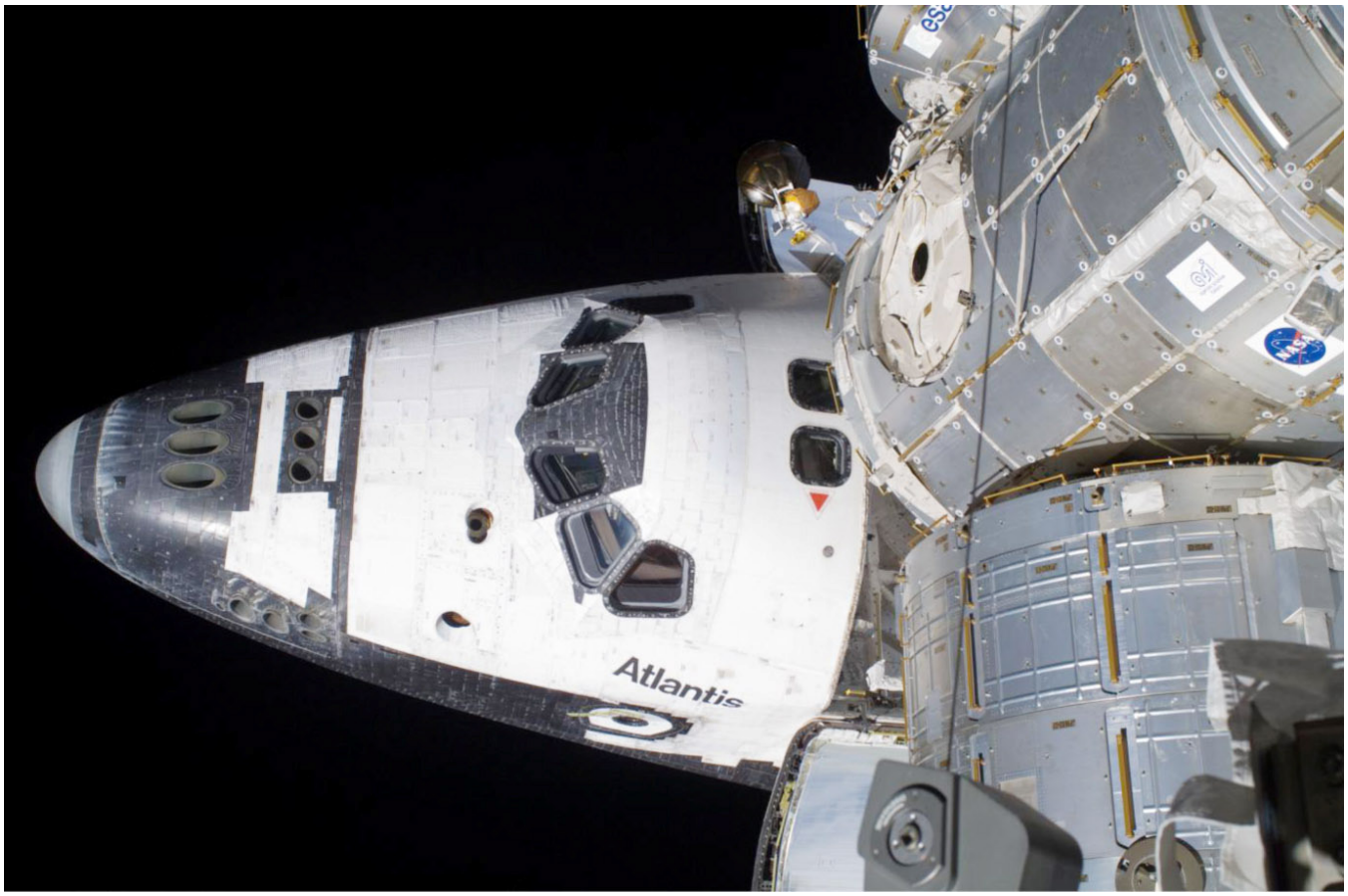

This is a high-angle view of the crew cabin of the space shuttle Atlantis during the second spacewalk of Atlantis' visit to the International Space Station.

Atlantis' launch for the STS-132 mission is precisely timed to lead to a linkup with the International Space Station about 220 miles above Earth. A series of engine firings during the first two days of the mission will bring the shuttle to a point about 50,000 feet behind the station. Once there, Atlantis will start its final approach. About 2.5 hours before docking, the shuttle's jets will be fired during what is called the terminal initiation burn. The shuttle will cover the final miles to the station during the next orbit.

As Atlantis moves closer to the station, its rendezvous radar system and trajectory control sensor will provide the crew with range and closing-rate data. Several small correction burns will place the shuttle about 1,000 feet below the station.

Commander Ken Ham, with help from Pilot Tony Antonelli and other crew members, will manually fly the shuttle for the remainder of the approach and docking.

Ham will stop Atlantis about 600 feet below the station. Timing the next steps to occur with proper lighting, he will maneuver the shuttle through an approximate eight-minute back flip called the Rendezvous Pitch Maneuver, also known as the R-bar Pitch Maneuver since Atlantis is in line with an imaginary vertical R-bar directly below the station. During this maneuver, station crew members Oleg Kotov and Timothy (T.J.) Creamer will photograph Atlantis' upper and lower surfaces through windows of the Zvezda Service Module. They will use digital cameras equipped with an 800mm lens to provide up to one-inch resolution and a 400mm lens providing three-inch resolution.

The photography is one of several techniques used to inspect the shuttle's Thermal Protection System for possible damage. Areas of special interest include the thermal protection tiles, the reinforced carbon-carbon panels along the wing leading edges and the nose cap, landing gear doors and the elevon cove. The photos will be downlinked through the station's Ku-band communications system for analysis by imagery experts in Mission Control.

When Atlantis completes its back flip, it will be back where it started with its payload bay facing the station. Ham then will fly the shuttle through a quarter circle to a position about 400 feet directly in front of the station. From that point he will begin the final approach to docking to the Pressurized Mating Adapter 2 at the forward end of the Harmony node.

The shuttle crew members will operate laptop computers that process the navigational data, the laser range systems and Atlantis' docking mechanism.

Using a video camera mounted in the center of the Orbiter Docking System, Ham will line up the docking ports of the two spacecraft. If necessary, he will pause the shuttle 30 feet from the station to ensure proper alignment of the docking mechanisms. He will maintain the shuttle's speed relative to the station at about one-tenth of a foot per second, while both Atlantis and the station are moving at about 17,500 mph. Ham will keep the docking mechanisms aligned to a tolerance of three inches.

When Atlantis makes contact with the station, preliminary latches will automatically link the two spacecraft. The shuttle's steering jets will be deactivated to reduce the forces acting at the docking interface. Shock absorber springs in the docking mechanism will dampen any relative motion between the shuttle and station.

Once motion between the shuttle and the station has been stopped, the docking ring will be retracted to close a final set of latches between the two vehicles.

UNDOCKING, SEPARATION AND DEPARTURE

At undocking time, the hooks and latches will be opened and springs will push the shuttle away from the station. Atlantis' steering jets will be shut off to avoid any inadvertent firings during the initial separation.

Once the shuttle is about two feet from the station and the docking devices are clear of one another, Antonelli will turn the steering jets back on and will manually control Atlantis within a tight corridor as the shuttle separates from the station.

Atlantis will move to a distance of about 450 feet, where Antonelli will begin to fly around the station. Atlantis will circle the shuttle around the station at a distance of 600-700 feet.

Once the shuttle completes 1.5 revolutions of the complex, Antonelli will fire Atlantis' jets to leave the area. The shuttle will begin to increase its distance behind the station with each trip around Earth while ground teams analyze data from the late inspection of the shuttle's heat shield. However, the distance will be close enough to allow the shuttle to return to the station in the unlikely event that the heat shield is damaged, preventing the shuttle's safe re-entry.

This page intentionally blank

SPACEWALKS

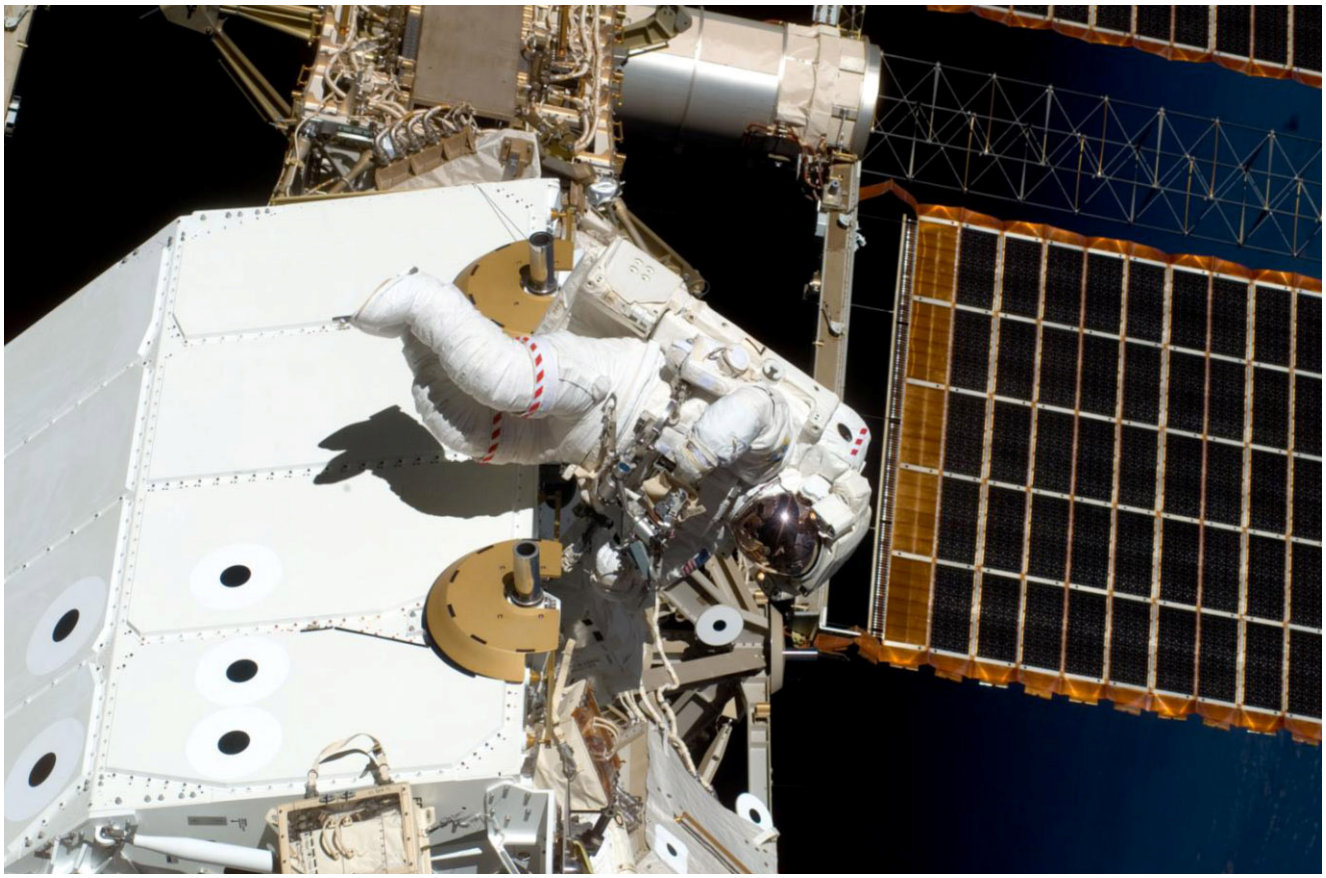

Astronaut Garrett Reisman, Expedition 16 flight engineer, participates in the STS-123 mission's first scheduled session of extravehicular activity as construction and maintenance continue on the International Space Station.

Over the course of the three spacewalks of the STS-132 mission, the International Space Station will gain spare and replacement parts that will help it continue functioning well into the future.

Mission Specialists Garrett Reisman, Michael Good and Steve Bowen will spend a total of 19.5 hours outside the station on flight days 4, 6 and 8. As all three crew members are experienced spacewalkers, they have elected not to designate one person as lead spacewalker for the mission; instead they'll each take a turn in that role on a different spacewalk. Bowen, who performed three spacewalks totaling 19 hours and 56 minutes during the STS-126 mission in 2008, will wear a spacesuit marked with a red stripe. He'll act as lead on the second spacewalk. Good, who spent 15 hours and 58 minutes working on the Hubble Space Telescope during STS-125 in 2009, will wear a suit with a band of red and white barber pole stripes and take the lead position on the third spacewalk. And Reisman, who took part in one spacewalk during the STS-123 mission in 2008,

will sport an all-white spacesuit. He'll lead the first spacewalk.

When a spacewalk – also called extravehicular activity, or EVA for short – is going on outside, one crew member inside the International Space Station is assigned the job of intravehicular officer, or spacewalk choreographer. In this case, that crew member will be Pilot Tony Antonelli. The spacewalks will also require astronauts inside the station to be at the controls of the station's 58-foot-long robotic arm to maneuver ammonia tank assembly and other pieces of hardware. Mission Specialist Piers Sellers will be at the arm's controls for those operations, along with whichever spacewalker isn't outside the station on a given day and, in the case of the first and third spacewalks, station Flight Engineer Tracy Caldwell Dyson.

Preparations will start the night before each spacewalk, when the astronauts spend time in the station's Quest Airlock. This practice is called the campout pre-breathe protocol and is used to purge nitrogen from the spacewalkers' systems and prevent decompression sickness, also known as "the bends."

During the campout, the two astronauts performing the spacewalk will isolate themselves inside the airlock while the air pressure is lowered to 10.2 pounds per square inch, or psi. The station is kept at the near-sea-level pressure of 14.7 psi. The morning of the spacewalk, the astronauts will wear oxygen masks while the airlock's pressure is raised back to 14.7 psi for an hour and the hatch between the airlock and the rest of the station is opened. That allows the spacewalkers to perform their morning routines before returning to the airlock, where the air pressure is lowered again. Approximately 50 minutes after the spacewalkers don their spacesuits, the pre-breathe protocol will be complete.

The procedure enables spacewalks to begin earlier in the crew's day than was possible before the protocol was adopted.

EVA-1

Duration: 6 hours, 30 minutes
EVA Crew: Reisman (lead) and Bowen
IV CREW: Antonelli
Robotic Arm Operators: Sellers, Good and Dyson

EVA Operations:

- Install spare space-to-ground antenna
- Install spare parts platform on the Special Purpose Dexterous Manipulator (Dextre)
- Loosen P6 battery bolts

The first spacewalk of the mission will be the only spacewalk not devoted to battery replacement – though there will be some prep work for that task before the spacewalkers finish for the day.

Once they've made their way out of the Quest airlock, Reisman and Bowen will move to a pallet of equipment brought up inside the shuttle's cargo bay and moved to the robotic arm's mobile base during flight day 3. On it are six new batteries for the P6 solar array, a spare space-to-ground antenna and a new piece of equipment for the Special Purpose Dexterous Manipulator, or Dextre.

At the pallet, Bowen will prepare the space-to-ground antenna dish for removal, then he and Reisman will each release four of the eight bolts holding the boom of the antenna onto the pallet. Reisman will then climb onto the end of the space station's robotic arm, so that he can carry the boom via the robotic arm to the Z1 segment of the station's truss system. And once Reisman is on his way, Bowen will prepare for removal a new storage platform brought up for Dextre.

When the spacewalkers meet back up at the Z1 segment of the truss, Bowen will install the antenna boom by driving two mounting bolts, and then begin connecting six power and data cables to the antenna while Reisman rides the robotic arm back to the pallet to retrieve the antenna dish, a task that will require removing two more bolts. Bowen should also have time to remove some insulation from the boom before Reisman returns.

Installing the antenna dish will require the spacewalkers to secure four bolts, then Reisman will connect two final cables, and, if time permits, Bowen will install a heat shield on the antenna's group interface tube and remove locks that prevent the antenna dish from rotating.

Reisman will then travel back to the spare parts pallet to pick up Dextre's new storage platform, after removing the four bolts holding it in place. He'll meet Bowen back at Dextre on top of the Destiny laboratory, where they'll install four bolts to secure the platform to the robot and, if time permits, connect two electrical fuses and install a maintenance tether.

While Reisman is getting off the robotic arm, Bowen will wrap up the planned work for the spacewalk by moving out to the end of the port side of the station's truss to the batteries of the P6 solar arrays, which will be swapped out over the course of the following two spacewalks. He'll get the six batteries ready for removal by loosening the two bolts holding each one in place, and then make his way back to the airlock.

EVA-2

Duration: 6 hours, 30 minutes
EVA Crew: Bowen (lead) and Good
IV CREW: Antonelli
Robotic Arm Operators: Sellers and Reisman

EVA Operations:

- P6 battery swap, part 1

Bowen and Good will replace three of the six batteries on the B side of the P6 solar array during this spacewalk – each of the two wings of the four solar arrays at the space station are designated either A or B. The six batteries on the A side of the P6 were replaced on STS-127.

The new batteries will be designated by letters A through F, and the old batteries numbered one through six. Good will remove an old battery from the solar array's integrated electrical assembly using two "scoops" that will been installed by Bowen to make it possible to maneuver the batteries. After removing two bolts, Good will hand battery 1 off, get out of the foot restraint he was working in, move closer to Bowen and take hold of the battery again. Bowen will then release the battery, move slightly further down the truss and position himself to take hold of the battery. Good will hand the battery to Bowen and then move himself closer to once again take hold and control the battery. The process is called

"shepherding," and might appear as though the spacewalkers are "inch-worming" along the truss, except that one person is always holding a 367-pound battery.

To install the battery in a temporary storage location on the integrated electrical assembly, Good will use one of the scoops to attach it to a multi-use tether , or ball-stack. The spacewalkers will then remove battery A from the pallet it launched to the station on (the space station robotic arm will be holding the pallet nearby for the spacewalkers' access) and shepherd it back to the integrated electrical assembly for installation in slot 1. The next step will be to remove battery 2, shepherd it to the pallet to be installed in slot A, and remove battery B to be installed in slot 2.

The process will continue until three batteries have been installed, then the first battery will be removed from its temporary storage location and installed in the vacant spot on the pallet. The order will be:

Battery 1 to temporary storage
Battery A to Slot 1
Battery 2 to Slot A
Battery B to Slot 2
Battery 3 to Slot B
Battery C to Slot 3
Battery 1 to Slot C

EVA-3

Duration: 6 hours, 30 minutes
EVA Crew: Good (lead) and Reisman
IV CREW: Antonelli
Robotic Arm Operators: Sellers, Bowen and Dyson

EVA Operations:

- P6 battery swap, part 2

Good and Reisman will spend the third and final spacewalk finishing up the battery swap work that Good and Bowen started. They'll use the same procedure and perform the work in the following order:

Battery 4 to temporary storage
Battery D to Slot 4
Battery 5 to Slot D
Battery E to Slot 5
Battery 6 to Slot E
Battery F to Slot 6
Battery 1 to Slow F

This page intentionally blank

EXPERIMENTS

The STS-132/ULF-4 mission will deliver Mini-Research Module-1, a Russian storage module that also will include a Russian payloads airlock destined for use on the Russian Multi-Purpose Laboratory Module (MLM) once it is launched, and continues the transition from International Space Station assembly to continuous scientific research though the end of the decade.

In addition to the module, Atlantis will deliver inside MRM, also known as Rassvet, Crew Health Care System medical support equipment, and equipment for cold storage and National Laboratory Pathfinder equipments.

Nearly 150 operating experiments in biological and biotechnology; human research; physical and materials sciences; technology development; Earth and space science, and educational activities will be conducted aboard the station, including several pathfinder investigations under the auspices of the station's new role as a U.S. National Laboratory.

In the past, assembly and maintenance activities have dominated the available time for crew work. But as completion of the orbiting laboratory nears, additional facilities and the crew members to operate them is expanding the time devoted to research as a national and multinational laboratory.

On STS-132, research continues into how the human body is affected by long-duration stays in microgravity. Among the experiments being delivered to the space station, of note, is the Nutritional Status Assessment, the most comprehensive in-flight study done by NASA to date of human physiologic changes during long-duration spaceflight.

Included in multiple experiments returning on STS-132 will be NASA's Integrated Immune study samples, which will allow researchers to assess and address the adverse effects of spaceflight on the human immune system. JAXA's NeuroRad, which has studied the effects of space radiation on nerve cell tumors, and ESA's DOSIS-DOBIES, addressing the distribution and measurement of radiation inside the space station and crew, are returning as well.

Also, three major additions to the research facilities aboard the station – the Minus Eighty-Degree Laboratory Freezer for ISS (MELFI), a multi-purpose freezer for storing samples, the Window Observational Research Facility (WORF), a facility for Earth science remote sensing instruments, and Express Rack 7, a multi-purpose payload rack for experiments – were delivered by Discovery's crew on the recent STS-131 shuttle mission. Those facilities have been installed and checked out inside the station and will be used by the Expedition 23 and Expedition 24 crews to expand the station's research potential.

SHORT-DURATION EXPERIMENTS TO BE PERFORMED ON STS-132/ULF4

Research activities on the shuttle and station are integrated to maximize return during station assembly. The shuttle serves as a platform for completing short-duration research, while providing supplies and sample return for ongoing research on station.

Biology and Biotechnology

Microbiology – 2 (Micro-2) is a fundamental biology experiment that expands our understanding of the fundamental basis of how spaceflight affects the biological and molecular functions of the cell and the molecular mechanisms, by which cells and tissues respond to spaceflight conditions. (NASA)

National Lab Pathfinder – Cells – 4 (NLP-Cells-4) is a commercial payload serving as a pathfinder for the use of the space station as a National Laboratory after station assembly is complete. It contains several different experiments that examine cellular replication and differentiation of cells. This research is investigating the use of spaceflight to enhance or improve cellular growth processes utilized in ground-based research. Principal investigator: Timothy Hammond, Durham Veterans Affairs Medical Center, Durham, N.C. (NASA)

National Lab Pathfinder – Vaccine – 9 (NLP-Vaccine-9) is a commercial payload serving as a pathfinder for the use of the space station as a National Laboratory. It contains several different pathogenic (disease causing) organisms. This research is investigating the use of spaceflight to develop potential vaccines for the prevention of different infections caused by these pathogens on Earth and in microgravity. Principal investigator: Timothy Hammond, Durham Veterans Affairs Medical Center, Durham, N.C. (NASA)

Human Research

Hypersole will determine how balance control is affected by changes in skin sensitivity pre- and post-spaceflight, specifically changes in skin sensitivity of the sole of the foot where receptors related to balance and maintaining balance while moving are located. Principal investigator for Hypersole: Dr. Leah R. Bent of the University of Guelph in Guelph, Ontario, Canada. (CSA)

Sleep-Wake Actigraphy and Light Exposure During Spaceflight – Short (Sleep-Short) will examine the effects of spaceflight on the sleep of the astronauts during space shuttle missions. Advancing state-of-the-art technology for monitoring, diagnosing and assessing treatment of sleep patterns is vital to treating insomnia on Earth and in space. Principal investigator: Charles A. Czeisler, Brigham and Women's Hospital, Harvard Medical School, Boston, Mass. (NASA)

Technology

Maui Analysis of Upper Atmospheric Injections (MAUI), a Department of Defense experiment, observes the space shuttle engine exhaust plumes from the Maui Space Surveillance Site in Hawaii when the space shuttle fires its engines at night or twilight. A telescope and all-sky imagers will take images and data while the space shuttle flies over the Maui site. The images are analyzed to better understand the interaction between the spacecraft plume and the upper atmosphere of Earth. Principal investigator: Rainer A. Dressler, Hanscom Air Force Base, Lexington, Mass. (NASA)

Ram Burn Observations (RAMBO) an experiment uses a satellite to observe space shuttle orbital maneuvering system engine burns. Its purpose is to improve plume models, which predict the direction the plume, or rising column of exhaust, will move as the shuttle maneuvers in orbit. Understanding the direction in which the spacecraft engine plume or exhaust flows could be significant to the safe

arrival and departure of spacecraft on current and future exploration missions. Principal investigator: William L. Dimpfl, Aerospace Corporation, Los Angeles. (NASA)

Shuttle Exhaust Ion Turbulence Experiments (SEITE), a Department of Defense experiment, uses space-based sensors to detect the ionospheric turbulence inferred from the radar observations from previous Space Shuttle Orbital Maneuvering System (OMS) burn experiments using ground-based radar. Principal investigator: Paul A. Bernhardt, Naval Research Laboratory, Washington D.C. (NASA)

Shuttle Ionospheric Modification with Pulsed Localized Exhaust Experiments (SIMPLEX), a Department of Defense experiment, investigates plasma turbulence driven by rocket exhaust in the ionosphere using ground-based radars. Principal investigator: Paul A. Bernhardt, Naval Research Lab, Washington D.C. (NASA)

EXPERIMENTS TO BE DELIVERED TO THE STATION ON STS-132/ULF4

Biology and Biotechnology

Gravity Related Genes in Arabidopsis – A (Genara-A) seeks to provide an understanding of microgravity-induced, altered-molecular activities that will help to find plant systems that compensate the negative impact on plant growth in space. Principal investigator: Eugenie Carnero-Diaz, Ph.D., Universite Pierre et Marie Curie, Paris, France. (ESA).

Regulation by Gravity of Ferulate Formation in Cell Walls of Rice Seedlings (Ferulate) tests the hypothesis that microgravity modifies ferulic acid, thereby decreasing the mechanical strength of cell walls. Principal investigator: Kazuyuki Wakabayashi, Osaka City University, Osaka, Japan. (JAXA)

Investigation of the Osteoclastic and Osteoblastic Responses to Microgravity Using Goldfish Scales (Fish Scales) will examine regenerating scales collected from anesthetized goldfish in microgravity using the Cell Biology Experiment Facility (CBEF); the results will be compared with ground controls. Principal investigator: Nobuo Suzuki, Kanazawa University, Kanazawa, Ishikawa, Japan. (JAXA)

Hydrotropism and Auxin-Inducible Gene Expression in Roots Grown Under Microgravity Conditions (HydroTropi) determines whether hydrotropic response can be used for the control of cucumber (*Cucumis sativus*) root growth orientation in microgravity. Principal investigator: Hideyuki Takahashi, Ph.D., Tohoku University, Sendai, Japan. (JAXA)

Microbial Dynamics in International Space Station (Microbe-I) experiment monitors microbes on board the space station that may affect the health of crew members. Principal investigator: Koichi Makimura, Teikyo University, Otsuka, Hachioji, Japan. (JAXA)

Educational Activities

Cube Lab is a low-cost 1 kilogram platform for educational projects on the space station. (NASA)

Japan Aerospace Exploration Agency – Education Payload Observation (JAXA-EPO) activities demonstrate educational events and artistic activities on board the space station to enlighten the general public about microgravity research and human spaceflight. Principal

investigator: Naoko Matsuo, Japan Aerospace Exploration Agency, Tsukuba, Japan. (JAXA)

Human Research

Bisphosphonates as a Countermeasure to Spaceflight Induced Bone Loss (Bisphosphonates) examines whether antiresorptive agents, which help reduce bone loss, in conjunction with the routine in-flight exercise program, will protect station crew members from the regional decreases in bone mineral density documented on previous space station missions. Principal investigators: Adrian LeBlanc, Division of Space Life Sciences, Universities Space Research Association, Houston; Toshio Matsumoto, University of Tokushima, Kuramoto, Japan. (NASA)

Nutritional Status Assessment (Nutrition) is the most comprehensive in-flight study done by NASA to date of human physiologic changes during long-duration spaceflight. This study includes measures of bone metabolism, oxidative damage, nutritional assessments, and hormonal changes. This study will affect both the definition of nutritional requirements and development of food systems for future space exploration missions. This experiment will also help to understand the impact of countermeasures (exercise and pharmaceuticals) on nutritional status and nutrient requirements for astronauts. Principal investigator: Scott M. Smith, Johnson Space Center, Houston. (NASA)

Dietary Intake Can Predict and Protect Against Changes in Bone Metabolism During Spaceflight and Recovery (Pro K) investigation is NASA's first evaluation of a dietary countermeasure to lessen bone loss of astronauts. Pro K proposes that a flight diet with a decreased ratio of animal protein to potassium will lead to decreased loss of bone mineral. Pro K will have an impact on the definition of nutritional requirements and development of food systems for future exploration missions, and could yield a method of counteracting bone loss that would have virtually no risk of side effects. Principal investigator: Scott M. Smith, Johnson Space Center, Houston. (NASA)

National Aeronautics and Space Administration Biological Specimen Repository (Repository) is a storage bank that is used to maintain biological specimens over extended periods of time and under well-controlled conditions. Biological samples from the space station, including blood and urine, are collected, processed and archived during the preflight, in-flight and post-flight phases of space station missions. This investigation has been developed to archive biosamples for use as a resource for future spaceflight-related research. Principal investigator: Kathleen A. McMonigal, Johnson Space Center, Houston. (NASA)

Physical and Materials Science

Selectable Optical Diagnostics Instrument – Aggregation of Colloidal Suspensions (SODI-Colloid) studies the aggregation (mass) phenomena of colloids (tiny solid particles suspended in a liquid) in the microgravity environment on board the space station. Principal investigator: Gerard Wegdam, Van der Waals-Zeeman Institute, University of Amsterdam, Amsterdam, The Netherlands. (ESA)

Technology

Japan Aerospace Exploration Agency – Commercial Payload Program (JAXA-Commercial Payload Program) consists of commercial items sponsored by JAXA sent to the space station to experience the microgravity environment. (JAXA)

SAMPLES/EXPERIMENTS TO BE RETURNED ON STS-132/ULF4

Biology and Biotechnology

APEX-CSA2 is one of a pair of investigations that use the Advanced Biological Research System (ABRS). APEX-CSA2 will compare the genes and tissue of the white spruce (Picea glauca) grown in space with those grown on Earth to help researchers understand the influence of gravity on plant physiology, growth and wood formation. APEX-CSA2 is led by Dr. Jean Beaulieu of Natural Resources Canada's Canadian Wood Fibre Centre in Quebec City, Quebec, Canada with the close collaboration of the Canadian Space Agency (CSA) and NASA.

Mycological Evaluation of Crew Exposure to Space Station Ambient Air (Myco) evaluates the risk of microorganisms via inhalation and adhesion to the skin to determine which fungi act as allergens on the space station. Principal investigator: Chiaki Mukai, Japan Aerospace Exploration Agency, Tsukuba, Japan. (JAXA)

Biomedical Analyses of Human Hair Exposed to a Long-term Spaceflight (Hair) examines the effect of long-duration spaceflight on gene expression and trace element metabolism in the human body. Principal investigator: Chiaki Mukai, Japan Aerospace Exploration Agency, Tsukuba, Japan. (JAXA)

Molecular Mechanism of Microgravity-Induced Skeletal Muscle Atrophy – Physiological Relevance of Cbl-b Ubiquitin Ligase (MyoLab) studies a rat muscle gene modified cell line to determine the effects of microgravity. Principal investigator: Takeshi Nikawa, The University of Tokushima, Tokoshima, Japan. (JAXA)

Biological Effects of Space Radiation and Microgravity on Mammalian Cells (NeuroRad) studies the effects of space radiation on the human neuroblastoma (nerve cell containing a tumor) cell line in microgravity. Principal investigator: Hideyuki Majima, Kagoshima University, Kagoshima, Japan. (JAXA)

Comprehensive Characterization of Micro-organisms and Allergens in Spacecraft (SWAB) uses advanced molecular techniques to comprehensively evaluate microbes on board the space station, including pathogens (organisms that may cause disease). It also will track changes in the microbial community as spacecraft visit the station and new station modules are added. This study allows an assessment of the risk of microbes to the crew and the spacecraft. Principal investigator: Duane L. Pierson, Johnson Space Center, Houston. (NASA)

Waving and Coiling of Arabidopsis Roots at Different g-levels (WAICO) studies the interaction of circumnutation (the successive bowing or bending in different directions of the growing tip of the stems and roots) and gravitropism (a tendency to grow toward or away from gravity) in microgravity and 1-g of Arabidopsis thaliana. Principal investigator: Guenther Scherer, Leibniz Universitat Hannover, Hannover, Germany. (ESA)

Human Research

Mental Representation of Spatial Cues During Spaceflight (3D-Space) experiment investigates the effects of exposure to microgravity on the mental representation of spatial cues by astronauts during and after spaceflight. The absence of the gravitational frame of reference during spaceflight could be responsible for disturbances in the mental representation of spatial cues, such as the perception of horizontal and vertical lines, the perception of an object's depth, and the perception of a target's distance. Principal investigator: Gilles Clement, Centre National de la Recherche Scientifique, Toulouse, France. (ESA)

Validation of Procedures for Monitoring Crew Member Immune Function (Integrated Immune) will assess the clinical risks resulting from the adverse effects of spaceflight on the human immune system and will validate a flight-compatible immune monitoring strategy. Researchers will collect and analyze blood, urine and saliva samples from crew members before, during and after spaceflight to monitor changes in the immune system. Changes in the immune system will be monitored by collecting and analyzing blood and saliva samples from crew members during flight and blood, urine, and saliva samples before and after spaceflight. Principal investigator: Clarence Sams, Johnson Space Center, Houston. (NASA)

IntraVenous Fluid GENeration for Exploration Missions (IVGEN) demonstrates the capability to purify water to the standards required for intravenous administration, then mix the water with salt crystals to produce normal saline. This hardware is a prototype that will allow flight surgeons more options to treat ill or injured crew members during future long-duration exploration missions. Hardware project scientist: John McQuillen, Glenn Research Center, Cleveland. (NASA)

Changes in Nutrient Contents in Space Food After Long-term Spaceflight (Space Food Nutrient) assesses the changes in nutrient contents in Japanese space foods after exposure to the space station environment for long-duration spaceflight. Principal investigator: Akiko Matsumoto, Japan Aerospace Exploration Agency, Tsukuba, Japan. (JAXA)

Physical and Materials Science

Materials Science Laboratory – Columnar-to-Equiaxed Transition in Solidification Processing and Microstructure Formation in Casting of Technical Alloys Under Diffusive and Magnetically Controlled Convective Conditions (MSL-CETSOL and MICAST) are two investigations that support research into metallurgical solidification, semiconductor crystal growth (Bridgman and zone melting), and measurement of thermophysical properties of materials. This is a cooperative investigation with the European Space Agency (ESA) and National Aeronautics and Space Administration (NASA) for accommodation and operation aboard the space station. Principal investigators: Charles-Andre Gandin, Ecole de Mines de Paris, ARMINES-CEMEF; Sophia Antipolis, France (CETSOL); Lorenz Ratke, German Aerospace Center, Cologne, Germany (MICAST). (NASA)

Space Dynamically Responding Ultrasonic Matrix System (SpaceDRUMS) comprises a suite of hardware that enables containerless processing (samples of experimental materials can be processed without ever touching a container wall). Using a collection of 20 acoustic beam emitters, SpaceDRUMS can

completely suspend a baseball-sized solid or liquid sample during combustion or heat-based synthesis. Because the samples never contact the container walls, materials can be produced in microgravity with an unparalleled quality of shape and composition. The ultimate goal of the SpaceDRUMS hardware is to assist with the development of advanced materials of a commercial quantity and quality, using the space-based experiments to guide development of manufacturing processes on Earth. Principal investigator: Jacques Guigne, Guigne Space Systems Inc., Paradise, Newfoundland, Canada. (NASA)

Selectable Optical Diagnostics Instrument – Diffusion and Soret Coefficient (SODI-DSC) studies the diffusion in six different liquids over time in the absence of convection induced by the gravity field. (ESA)

Earth and Space Sciences

Dose Distribution Inside ISS – Dosimetry for Biological Experiments in Space (DOSIS-DOBIES) provides documentation of the actual nature and distribution of the radiation field inside the space station and develops a standard method to measure the absorbed doses in biological samples on board the station. Principal investigator: Guenther Reitz, German Aerospace Center, Cologne, Germany. (ESA)

For more information on the science performed on the International Space Station, visit:

http://www.nasa.gov/mission_pages/station/science/

DETAILED SUPPLEMENTARY OBJECTIVES AND DETAILED TEST OBJECTIVES

DSO-641

Risk of Orthostatic Intolerance During Re-exposure to Gravity. One of the most important physiological changes that may negatively impact crew safety is post-flight orthostatic intolerance. Astronauts who have orthostatic intolerance are unable to maintain a normal systolic blood pressure during head-up tilt have elevated heart rates and may experience presyncope or syncope with upright posture. This problem affects about 30 percent of astronauts who fly short-duration missions (4–18 days) and 83 percent of astronauts who fly long-duration missions. This condition creates a potential hazard for crew members during re-entry and after landing, especially for emergency egress contingencies.

Two countermeasures are currently employed to ameliorate post-flight orthostatic intolerance: fluid loading and an antigravity suit. Unfortunately, neither of these are completely effective for all phases of landing and egress; thus, continued countermeasure development is important. Preliminary evidence has shown that commercial compression hose that include abdominal compression can significantly improve orthostatic tolerance. These data are similar to clinical studies using inflatable compression garments.

Custom-fitted, commercial compression garments will be evaluated as countermeasures to immediate and longer-term post-flight orthostatic intolerance. These garments will provide a continuous, graded compression from the foot to the hip, and a static

compression over the lower abdomen. These garments should provide superior fit and comfort as well as being easier to don. Tilt testing will be used as an orthostatic challenge before and after spaceflight.

DTO 805 Crosswind Landing Performance (If opportunity)

The purpose of this DTO is to demonstrate the capability to perform a manually controlled landing in the presence of a crosswind. The testing is done in two steps.

1. Pre-launch: Ensure planning will allow selection of a runway with Microwave Scanning Beam Landing System support, which is a set of dual transmitters located beside the runway providing precision navigation vertically, horizontally and longitudinally with respect to the runway. This precision navigation subsystem helps provide a higher probability of a more precise landing with a crosswind of 10 to 15 knots as late in the flight as possible.

2. Entry: This test requires that the crew perform a manually controlled landing in the presence of a 90-degree crosswind component of 10 to 15 knots steady state.

During a crosswind landing, the drag chute will be deployed after nose gear touchdown when the vehicle is stable and tracking the runway centerline.

DTO 900 Solid Rocket Booster Thrust Oscillation

The Space Shuttle Program is continuing to gather data on pressure oscillation, or periodic variation, a phenomenon that regularly occurs within solid rocket motors through the remaining shuttle flights. The data obtained from five flights designated to acquire pressure oscillation data have provided a better understanding of solid rocket motor dynamics. The collection of these additional data points will provide greater statistical significance of the data for use in dynamic analyses of the four segment motors. These analyses and computer models will be used for future propulsion system designs.

The pressure oscillation that is observed in solid rocket motors is similar to the hum made when blowing into a bottle. At 1.5 psi, or pounds per square inch, a pressure wave will move up and down the motor from the front to the rear, generating acoustic noise as well as physical loads in the structure. These data are necessary to help propulsion engineers confirm modeling techniques of pressure oscillations and the loads they create. As NASA engineers develop alternate propulsion designs for use in NASA, they will take advantage of current designs from which they can learn and measure.

In an effort to obtain data to correlate pressure oscillation with the loads it can generate, the Space Shuttle Program is continuing to use the Enhanced Data Acquisition System to gather detailed information.

The Enhanced Data Acquisition System, or EDAS, is a data acquisition system that will record pressure data from one of the Reusable Solid Rocket Booster Operational Pressure Transducers, or OPT, and from accelerometers and strain gages placed on the forward skirt walls. These data will provide engineers with time synchronized data that will allow them to determine the accelerations and loads that are transferred through the structure due to the pressure oscillation forces.

HISTORY OF SPACE SHUTTLE ATLANTIS

Space shuttle Atlantis' spaceflight career began on Oct. 3, 1985, with launch on its maiden voyage to begin STS-51J – a dedicated Department of Defense mission. It was the fourth orbital vehicle manufactured following Columbia, Challenger and Discovery.

Construction of Atlantis, referenced internally by its airframe number OV-104, began in March 1980 at the Palmdale, Calif., manufacturing plant. It was transported to Kennedy Space Center in April 1985 ahead of its maiden voyage.

BACKGROUND

Atlantis was named after the primary research vessel for the Woods Hole Oceanographic Institute in Massachusetts from 1930 to 1966. The two-masted, 460-ton ketch was the first U.S. vessel to be used for oceanographic research. Such research was considered to be one of the last bastions of the sailing vessel as steam-and-diesel-powered vessels dominated the waterways.

The steel-hulled ocean research ship was approximately 140 feet long and 29 feet wide to add to her stability. She featured a crew of 17 and room for five scientists. The research personnel worked in two onboard laboratories, examining water samples and marine life brought to the surface by two large winches from thousands of feet below the surface. The water samples taken at different depths varied in temperature, providing clues to the flow of ocean currents. The crew also used the first electronic sounding devices to map the ocean floor.

Space shuttle Atlantis has carried on the spirit of the sailing vessel with voyages of its own, including missions to the Russian Space Station Mir, deployment of the Galileo planetary spacecraft in 1989 and the deployment of the Arthur Holley Compton Gamma Ray Observatory in 1991.

UPGRADES AND FEATURES

Atlantis benefited from lessons learned in the construction and testing of Enterprise, Columbia, Challenger and Discovery. At rollout, its weight was 6,974 pounds less than Columbia.

The experience gained during its assembly also enabled Atlantis to be completed with a 49 percent reduction in man hours (compared to Columbia). Much of this time savings was attributed to the greater use of thermal protection blankets on the upper orbiter body instead of tiles.

During the construction of Discovery and Atlantis, NASA opted to have the various contractors manufacture a set of "structural spares" to facilitate the repair of an orbiter should one be damaged. This contract was valued at $389 million and consisted of a spare aft-fuselage, mid-fuselage, forward fuselage halves, vertical tail and rudder, wings, elevons and a body flap.

These spares were used later in the assembly of Endeavour.

After the loss of Challenger, Atlantis was shipped to California for upgrades and modifications, including

- A drag chute
- New plumbing to allow for extended duration missions
- More than 800 new heat protection tiles and blankets
- New insulation for the main landing gear doors
- Structural modifications to its airframe

Altogether, 165 modifications were made to Atlantis over the 20 months it spent in the Palmdale, Calif., manufacturing facility.

CONSTRUCTION MILESTONES

Jan. 29, 1979
Contract Award

March 3, 1980
Start structural assembly of Crew Module

Nov. 23, 1981
Start structural assembly of aft-fuselage

June 13, 1983
Wings arrive at Palmdale from Grumman

Dec. 2, 1983
Start of Final Assembly

April 10, 1984
Complete final assembly

March 6, 1985
Rollout from Palmdale

April 3, 1985
Overland transport from Palmdale to Edwards Air Force Base, Calif.

April 12-13, 1985
Ferry Flight from Edwards to Kennedy Space Center (overnight 4/12 at Ellington)

Sept. 5, 1985
Flight Readiness Firing

Oct. 3, 1985
First Flight (STS-51J)

May 14, 2010
Final Scheduled Flight (STS-132)

FLIGHT MILESTONES

1. STS-51J (Oct. 3-7, 1985)	1,682,641 miles
2. STS-61B (Nov. 26-Dec. 3, 1985)	2,466,956 miles
3. STS-27 (Dec. 2-6, 1988)	1,812,075 miles
4. STS-30 (May 4-8, 1989)	1,477,500 miles
5. STS-34 (Oct. 18-23, 1989)	1,800,000 miles
6. STS-36 (Feb. 28-March 4, 1990)	1,837,962 miles
7. STS-38 (Nov. 15-20, 1990)	2,045,056 miles
8. STS-37 (April 5-11, 1991)	2,487,075 miles
9. STS-43 (Aug. 2-11, 1991)	3,700,400 miles
10. STS-44 (Nov. 24-Dec. 1, 1991)	2,890,067 miles
11. STS-45 (March, 24-April 2, 1992)	3,274,946 miles
12. STS-46 (July 31-Aug. 8, 1992)	3,321,007 miles
13. STS-66 (Nov. 3-14, 1994)	4,554,791 miles
14. STS-71 (June 27-July 7, 1995)	4,100,000 miles
15. STS-74 (Nov. 12-20, 1995)	3,400,000 miles
16. STS-76 (March 22-31, 1996)	3,800,000 miles
17. STS-79 (Sept. 16-26, 1996)	3,900,000 miles
18. STS-81 (Jan. 12-22, 1997)	3,900,000 miles
19. STS-84 (May 15-24, 1997)	3,600,000 miles
20. STS-86 (Sept. 25-Oct. 6, 1997)	4,225,000 miles
21. STS-101 (May 19-29, 2000)	5,076,281 miles
22. STS-106 (Sept. 8-20, 2000)	4,919,243 miles
23. STS-98 (Feb. 7-20, 2001)	5,369,576 miles
24. STS-104 (July 12-24, 2001)	5,309,429 miles
25. STS-110 (April 8-19, 2002)	4,525,299 miles
26. STS-112 (Oct. 7-18, 2002)	4,513,015 miles
27. STS-115 (Sept. 9-21, 2006)	4,910,288 miles
28. STS-117 (June 8-22, 2007)	5,809,363 miles
29. STS-122 (Feb. 7-20,2008)	5,296,842 miles
30. STS-125 (May 11-24, 2009)	5,276,000 miles
31. STS-129 (Nov. 16-27, 2009)	4,490,138 miles
32. STS-132 (May 14-26, 2010)	Approx. 4.4 million
Total Atlantis Miles	**115,770,929 (through STS-129)**

ATLANTIS BY THE NUMBERS

Total Atlantis miles traveled	115,770,929 (through STS-129)
Total number of days in orbit	282
Total number of orbits	4,462
Total number of flights	31
Total number of crew members	185
Mir dockings	7
International Space Station dockings	10

SHUTTLE REFERENCE DATA

SHUTTLE ABORT MODES

Redundant Sequence Launch Sequencer (RSLS) Aborts

These occur when the on-board shuttle computers detect a problem and command a halt in the launch sequence after taking over from the ground launch sequencer and before solid rocket booster ignition.

Ascent Aborts

Selection of an ascent abort mode may become necessary if there is a failure that affects vehicle performance, such as the failure of a space shuttle main engine or an orbital maneuvering system engine. Other failures requiring early termination of a flight, such as a cabin leak, might also require the selection of an abort mode. There are two basic types of ascent abort modes for space shuttle missions: intact aborts and contingency aborts. Intact aborts are designed to provide a safe return of the orbiter to a planned landing site. Contingency aborts are designed to permit flight crew survival following more severe failures when an intact abort is not possible. A contingency abort would generally result in a ditch operation.

Intact Aborts

There are four types of intact aborts: abort to orbit (ATO), abort once around (AOA), transoceanic abort landing (TAL) and return to launch site (RTLS).

Return to Launch Site

The RTLS abort mode is designed to allow the return of the orbiter, crew, and payload to the launch site, KSC, approximately 25 minutes after liftoff.

The RTLS profile is designed to accommodate the loss of thrust from one space shuttle main engine between liftoff and approximately four minutes 20 seconds, after which not enough main propulsion system propellant remains to return to the launch site. An RTLS can be considered to consist of three stages – a powered stage, during which the space shuttle main engines are still thrusting; an external tank separation phase; and the glide phase, during which the orbiter glides to a landing at the KSC. The powered RTLS phase begins with the crew selection of the RTLS abort, after solid rocket booster separation. The crew selects the abort mode by positioning the abort rotary switch to RTLS and depressing the abort push button. The time at which the RTLS is selected depends on the reason for the abort. For example, a three-engine RTLS is selected at the last moment, about 3 minutes, 34 seconds into the mission; whereas an RTLS chosen due to an engine out at liftoff is selected at the earliest time, about 2 minutes, 20 seconds into the mission (after solid rocket booster separation).

After RTLS is selected, the vehicle continues downrange to dissipate excess main propulsion system propellant. The goal is to leave only enough main propulsion system propellant to be able to turn the vehicle around, fly back toward the KSC and achieve the proper main engine cutoff conditions so the vehicle can glide to the KSC after external tank separation. During the downrange phase, a pitch-around maneuver is initiated (the time depends in part on the time of a space shuttle main engine

failure) to orient the orbiter/external tank configuration to a heads-up attitude, pointing toward the launch site. At this time, the vehicle is still moving away from the launch site, but the space shuttle main engines are now thrusting to null the downrange velocity. In addition, excess orbital maneuvering system and reaction control system propellants are dumped by continuous orbital maneuvering system and reaction control system engine thrustings to improve the orbiter weight and center of gravity for the glide phase and landing.

The vehicle will reach the desired main engine cutoff point with less than 2 percent excess propellant remaining in the external tank. At main engine cutoff minus 20 seconds, a pitch down maneuver (called powered pitch-down) takes the mated vehicle to the required external tank separation attitude and pitch rate. After main engine cutoff has been commanded, the external tank separation sequence begins, including a reaction control system maneuver that ensures that the orbiter does not recontact the external tank and that the orbiter has achieved the necessary pitch attitude to begin the glide phase of the RTLS.

After the reaction control system maneuver has been completed, the glide phase of the RTLS begins. From then on, the RTLS is handled similarly to a normal entry.

Transoceanic Abort Landing

The TAL abort mode was developed to improve the options available when a space shuttle main engine fails after the last RTLS opportunity but before the first time that an AOA can be accomplished with only two space shuttle main engines or when a major orbiter system failure, for example, a large cabin pressure leak or cooling system failure, occurs after the last RTLS opportunity, making it imperative to land as quickly as possible.

In a TAL abort, the vehicle continues on a ballistic trajectory across the Atlantic Ocean to land at a predetermined runway. Landing occurs about 45 minutes after launch. The landing site is selected near the normal ascent ground track of the orbiter to make the most efficient use of space shuttle main engine propellant. The landing site also must have the necessary runway length, weather conditions and U.S. State Department approval. The three landing sites that have been identified for a launch are Zaragoza, Spain; Moron, Spain; and Istres, France.

To select the TAL abort mode, the crew must place the abort rotary switch in the TAL/AOA position and depress the abort push button before main engine cutoff (depressing it after main engine cutoff selects the AOA abort mode). The TAL abort mode begins sending commands to steer the vehicle toward the plane of the landing site. It also rolls the vehicle heads up before main engine cutoff and sends commands to begin an orbital maneuvering system propellant dump (by burning the propellants through the orbital maneuvering system engines and the reaction control system engines). This dump is necessary to increase vehicle performance (by decreasing weight) to place the center of gravity in the proper place for vehicle control and to decrease the vehicle's landing weight. TAL is handled like a normal entry.

Abort to Orbit

An ATO is an abort mode used to boost the orbiter to a safe orbital altitude when performance has been lost and it is impossible

to reach the planned orbital altitude. If a space shuttle main engine fails in a region that results in a main engine cutoff under speed, the MCC will determine that an abort mode is necessary and will inform the crew. The orbital maneuvering system engines would be used to place the orbiter in a circular orbit.

Abort Once Around

The AOA abort mode is used in cases in which vehicle performance has been lost to such an extent that either it is impossible to achieve a viable orbit or not enough orbital maneuvering system propellant is available to accomplish the orbital maneuvering system thrusting maneuver to place the orbiter on orbit and the deorbit thrusting maneuver. In addition, an AOA is used in cases in which a major systems problem (cabin leak, loss of cooling) makes it necessary to land quickly. In the AOA abort mode, one orbital maneuvering system thrusting sequence is made to adjust the post-main engine cutoff orbit so a second orbital maneuvering system thrusting sequence will result in the vehicle deorbiting and landing at the AOA landing site (White Sands, N.M.; Edwards Air Force Base, Calif.; or the Kennedy Space Center, Fla). Thus, an AOA results in the orbiter circling the Earth once and landing about 90 minutes after liftoff.

After the deorbit thrusting sequence has been executed, the flight crew flies to a landing at the planned site much as it would for a nominal entry.

Contingency Aborts

Contingency aborts are caused by loss of more than one main engine or failures in other systems. Loss of one main engine while another is stuck at a low thrust setting also may necessitate a contingency abort. Such an abort would maintain orbiter integrity for in-flight crew escape if a landing cannot be achieved at a suitable landing field.

Contingency aborts due to system failures other than those involving the main engines would normally result in an intact recovery of vehicle and crew. Loss of more than one main engine may, depending on engine failure times, result in a safe runway landing. However, in most three-engine-out cases during ascent, the orbiter would have to be ditched. The inflight crew escape system would be used before ditching the orbiter.

Abort Decisions

There is a definite order of preference for the various abort modes. The type of failure and the time of the failure determine which type of abort is selected. In cases where performance loss is the only factor, the preferred modes are ATO, AOA, TAL and RTLS, in that order. The mode chosen is the highest one that can be completed with the remaining vehicle performance.

In the case of some support system failures, such as cabin leaks or vehicle cooling problems, the preferred mode might be the one that will end the mission most quickly. In these cases, TAL or RTLS might be preferable to AOA or ATO. A contingency abort is never chosen if another abort option exists.

Mission Control Houston is prime for calling these aborts because it has a more precise knowledge of the orbiter's position than the crew can obtain from on-board systems. Before main engine cutoff, Mission Control makes periodic calls to the crew to identify which abort mode is (or is not) available. If ground communications are lost, the flight crew has

onboard methods, such as cue cards, dedicated displays and display information, to determine the abort region. Which abort mode is selected depends on the cause and timing of the failure causing the abort and which mode is safest or improves mission success. If the problem is a space shuttle main engine failure, the flight crew and Mission Control Center select the best option available at the time a main engine fails.

If the problem is a system failure that jeopardizes the vehicle, the fastest abort mode that results in the earliest vehicle landing is chosen. RTLS and TAL are the quickest options (35 minutes), whereas an AOA requires about 90 minutes. Which of these is selected depends on the time of the failure with three good space shuttle main engines.

The flight crew selects the abort mode by positioning an abort mode switch and depressing an abort push button.

SHUTTLE ABORT HISTORY

RSLS Abort History

(STS-41 D) June 26, 1984

The countdown for the second launch attempt for Discovery's maiden flight ended at T-4 seconds when the orbiter's computers detected a sluggish valve in main engine No. 3. The main engine was replaced and Discovery was finally launched on Aug. 30, 1984.

(STS-51 F) July 12, 1985

The countdown for Challenger's launch was halted at T-3 seconds when onboard computers detected a problem with a coolant valve on main engine No. 2. The valve was replaced and Challenger was launched on July 29, 1985.

(STS-55) March 22, 1993

The countdown for Columbia's launch was halted by onboard computers at T-3 seconds following a problem with purge pressure readings in the oxidizer preburner on main engine No. 2. Columbia's three main engines were replaced on the launch pad, and the flight was rescheduled behind Discovery's launch on STS-56. Columbia finally launched on April 26, 1993.

(STS-51) Aug. 12, 1993

The countdown for Discovery's third launch attempt ended at the T-3 second mark when onboard computers detected the failure of one of four sensors in main engine No. 2 which monitor the flow of hydrogen fuel to the engine. All of Discovery's main engines were ordered replaced on the launch pad, delaying the shuttle's fourth launch attempt until Sept. 12, 1993.

(STS-68) Aug. 18, 1994

The countdown for Endeavour's first launch attempt ended 1.9 seconds before liftoff when onboard computers detected higher than acceptable readings in one channel of a sensor monitoring the discharge temperature of the high pressure oxidizer turbopump in main engine No. 3. A test firing of the engine at the Stennis Space Center in Mississippi on September 2nd confirmed that a slight drift in a fuel flow meter in the engine caused a slight increase in the turbopump's temperature. The test firing also confirmed a slightly slower start for main engine No. 3 during the pad abort, which could have contributed to the higher temperatures. After Endeavour was brought back to the Vehicle Assembly Building to be outfitted with three replacement engines,

NASA managers set Oct. 2 as the date for Endeavour's second launch attempt.

Abort to Orbit History

(STS-51 F) July 29, 1985

After an RSLS abort on July 12, 1985, Challenger was launched on July 29, 1985. Five minutes and 45 seconds after launch, a sensor problem resulted in the shutdown of center engine No. 1, resulting in a safe "abort to orbit" and successful completion of the mission.

SPACE SHUTTLE MAIN ENGINES

Developed in the 1970s by NASA's Marshall Space Flight Center, in Huntsville, Ala., the space shuttle main engine is the most advanced liquid-fueled rocket engine ever built. Every space shuttle main engine is tested and proven flight worthy at NASA's Stennis Space Center in south Mississippi, before installation on an orbiter. Its main features include variable thrust, high performance reusability, high redundancy and a fully integrated engine controller.

The shuttle's three main engines are mounted on the orbiter aft fuselage in a triangular pattern. Spaced so that they are movable during launch, the engines are used, in conjunction with the solid rocket boosters, to steer the shuttle vehicle.

Each of these powerful main engines is 14 feet long, weighs about 7,000 pounds and is 7.5 feet in diameter at the end of its nozzle.

The engines operate for about 8.5 minutes during liftoff and ascent, burning more than 500,000 gallons of super-cold liquid hydrogen and liquid oxygen propellants stored in the external tank attached to the underside of the shuttle. The engines shut down just before the shuttle, traveling at about 17,000 miles per hour, reaches orbit.

The main engine operates at greater temperature extremes than any mechanical system in common use today. The fuel, liquefied hydrogen at -423 degrees Fahrenheit, is the second coldest liquid on Earth. When it and the liquid oxygen are combusted, the temperature in the main combustion chamber is 6,000 degrees Fahrenheit, hotter than the boiling point of iron.

The main engines use a staged combustion cycle so that all propellants entering the engines are used to produce thrust, or power, more efficiently than any previous rocket engine. In a staged combustion cycle, propellants are first burned partially at high pressure and relatively low temperature, and then burned completely at high temperature and pressure in the main combustion chamber. The rapid mixing of the propellants under these conditions is so complete that 99 percent of the fuel is burned.

At normal operating level, each engine generates 490,847 pounds of thrust, measured in a vacuum. Full power is 512,900 pounds of thrust; minimum power is 316,100 pounds of thrust.

The engine can be throttled by varying the output of the preburners, thus varying the speed of the high-pressure turbopumps and, therefore, the flow of the propellant.

At about 26 seconds into ascent, the main engines are throttled down to 316,000 pounds of thrust to keep the dynamic pressure on the vehicle below a specified level, about 580 pounds per square foot, known as max q. Then, the engines are throttled back up to

normal operating level at about 60 seconds. This reduces stress on the vehicle. The main engines are throttled down again at about seven minutes, 40 seconds into the mission to maintain three g's, three times the Earth's gravitational pull, reducing stress on the crew and the vehicle. This acceleration level is about one-third the acceleration experienced on previous crewed space vehicles.

About 10 seconds before main engine cutoff, or MECO, the cutoff sequence begins. About three seconds later the main engines are commanded to begin throttling at 10 percent thrust per second until they achieve 65 percent thrust. This is held for about 6.7 seconds, and the engines are shut down.

The engine performance has the highest thrust for its weight of any engine yet developed. In fact, one space shuttle main engine generates sufficient thrust to maintain the flight of two and one-half Boeing 747 airplanes.

The space shuttle main engine also is the first rocket engine to use a built-in electronic digital controller, or computer. The controller accepts commands from the orbiter for engine start, change in throttle, shutdown and monitoring of engine operation.

NASA continues to increase the reliability and safety of shuttle flights through a series of enhancements to the space shuttle main engines. The engines were modified in 1988, 1995, 1998, 2001 and 2007. Modifications include new high-pressure fuel and oxidizer turbopumps that reduce maintenance and operating costs of the engine, a two-duct powerhead that reduces pressure and turbulence in the engine, and a single-coil heat exchanger that lowers the number of post flight inspections required. Another modification incorporates a large-throat main combustion chamber that improves the engine's reliability by reducing pressure and temperature in the chamber.

The most recent engine enhancement is the Advanced Health Management System, or AHMS, which made its first flight in 2007. AHMS is a controller upgrade that provides new monitoring and insight into the health of the two most complex components of the space shuttle main engine – the high pressure fuel turbopump and the high pressure oxidizer turbopump. New advanced digital signal processors monitor engine vibration and have the ability to shut down an engine if vibration exceeds safe limits. AHMS was developed by engineers at Marshall.

After the orbiter lands, the engines are removed and returned to a processing facility at NASA's Kennedy Space Center, Fla., where they are rechecked and readied for the next flight. Some components are returned to the main engine's prime contractor, Pratt & Whitney Rocketdyne, West Palm Beach, Fla., for regular maintenance. The main engines are designed to operate for 7.5 accumulated hours.

SPACE SHUTTLE SOLID ROCKET BOOSTERS (SRB)

The two solid rocket boosters required for a space shuttle launch and first two minutes of powered flight boast the largest solid-propellant motors ever flown. They are the first large rockets designed for reuse and are the only solid rocket motors rated for human flight. The SRBs have the capacity to carry the entire weight of the external fuel tank, or ET, and orbiter, and to transmit the weight load through their structure to the mobile launcher platform, or MLP.

The SRBs provide 71.4 percent of the thrust required to lift the space shuttle off the launch pad and during first-stage ascent to an altitude of about 150,000 feet, or 28 miles. At launch, each booster has a sea level thrust of approximately 3.3 million pounds and is ignited after the ignition and verification of the three space shuttle main engines, or SSMEs.

SRB apogee occurs at an altitude of about 230,000 feet, or 43 miles, 75 seconds after separation from the main vehicle. At booster separation, the space shuttle orbiter has reached an altitude of 24 miles and is traveling at a speed in excess of 3,000 miles per hour.

The primary elements of each booster are nose cap, housing the pilot and drogue parachute; frustum, housing the three main parachutes in a cluster; forward skirt, housing the booster flight avionics, altitude sensing, recovery avionics, parachute cameras and range safety destruct system; four motor segments, containing the solid propellant; motor nozzle; and aft skirt, housing the nozzle and thrust vector control systems required for guidance. Each SRB possesses its own redundant auxiliary power units and hydraulic pumps.

SRB impact occurs in the ocean approximately 140 miles downrange. SRB retrieval is provided after each flight by specifically designed and built ships. The frustums, drogue and main parachutes are loaded onto the ships along with the boosters and towed back to NASA's Kennedy Space Center, where they are disassembled and refurbished for reuse. Before retirement, each booster can be used as many as 20 times.

Each booster is just over 149 feet long and 12.17 feet in diameter. Both boosters have a combined weight of 1,303,314 pounds at lift-off. They are attached to the ET at the SRB aft attach ring by an upper and lower attach strut and a diagonal attach strut. The forward end of each SRB is affixed to the ET by one attach bolt and ET ball fitting on the forward skirt. While positioned on the launch pad, the space shuttle is attached to the MLP by four bolts and explosive nuts equally spaced around each SRB. After ignition of the solid rocket motors, the nuts are severed by small explosives that allow the space shuttle vehicle to perform lift off.

United Space Alliance (USA)

USA, at Kennedy facilities, is responsible for all SRB operations except the motor and nozzle portions. In conjunction with maintaining sole responsibility for manufacturing and processing of the non-motor hardware and vehicle integration, USA provides the service of retrieval, post flight inspection and analysis, disassembly and refurbishment of the hardware. USA also exclusively retains comprehensive responsibility for the orbiter.

The reusable solid rocket motor segments are shipped from ATK Launch Systems in Utah to Kennedy, where they are mated by USA personnel to the other structural components – the forward assembly, aft skirt, frustum and nose cap – in the Vehicle Assembly Building. Work involves the complete disassembly and refurbishment of the major SRB structures – the aft skirts, frustums, forward skirts and all ancillary hardware – required to complete an SRB stack and mate to the ET. Work then proceeds to ET/SRB mate, mate with the orbiter and finally, space shuttle close out operations. After hardware restoration concerning flight configuration is complete, automated checkout and hot fire are performed early in hardware flow to ensure that the refurbished components satisfy all flight performance requirements.

ATK Launch Systems (ATK)

ATK Launch Systems of Brigham City, Utah, manufactures space shuttle reusable solid rocket motors, or RSRMs, at their Utah facility. Each RSRM – just over 126 feet long and 12 feet in diameter – consists of four rocket motor segments and an aft exit cone assembly is. From ignition to end of burn, each RSRM generates an average thrust of 2.6 million pounds and burns for approximately 123 seconds. Of the motor's total weight of 1.25 million pounds, propellant accounts for 1.1 million pounds. The four motor segments are matched by loading each from the same batches of propellant ingredients to minimize any thrust imbalance. The segmented casing design assures maximum flexibility in fabrication and ease of transportation and handling. Each segment is shipped to KSC on a heavy-duty rail car with a specialty built cover.

SRB Hardware Design Summary

Hold-Down Posts

Each SRB has four hold-down posts that fit into corresponding support posts on the MLP. Hold-down bolts secure the SRB and MLP posts together. Each bolt has a nut at each end, but the top nut is frangible, or breakable. The top nut contains two NASA Standard detonators, or NSDs, that, when ignited at solid rocket motor ignition command, split the upper nut in half.

Splitting the upper nuts allow the hold-down bolts to be released and travel downward because of NSD gas pressure, gravity and the release of tension in the bolt, which is pretensioned before launch. The bolt is stopped by the stud deceleration stand which contains sand to absorb the shock of the bolt dropping down several feet. The SRB bolt is 28 inches long, 3.5 inches in diameter and weighs approximately 90 pounds. The frangible nut is captured in a blast container on the aft skirt specifically designed to absorb the impact and prevent pieces of the nut from liberating and becoming debris that could damage the space shuttle.

Integrated Electronic Assembly (IEA)

The aft IEA, mounted in the ET/SRB attach ring, provides the electrical interface between the SRB systems and the obiter. The aft IEA receives data, commands, and electrical power from the orbiter and distributes these inputs throughout each SRB. Components located in the forward assemblies of each SRB are powered by the aft IEA through the forward IEA, except for those utilizing the recovery and range safety batteries located in the forward assemblies. The forward IEA communicates with and receives power from the orbiter through the aft IEA, but has no direct electrical connection to the orbiter.

Electrical Power Distribution

Electrical power distribution in each SRB consists of orbiter-supplied main dc bus power to each SRB via SRB buses A, B and C. Orbiter main dc buses A, B and C supply main dc bus power to corresponding SRB buses A, B and C. In addition, orbiter main dc, bus C supplies backup power to SRB buses A and B, and orbiter bus B supplies backup power to SRB bus C. This electrical power distribution arrangement allows all SRB buses to remain powered in the event one orbiter main bus fails.

The nominal dc voltage is 28 V dc, with an upper limit of 32 V dc and a lower limit of 24 V dc.

Hydraulic Power Units (HPUs)

There are two self-contained, independent HPUs on each SRB. Each HPU consists of an auxiliary power unit, or APU; Fuel Supply Module, or FSM; hydraulic pump; hydraulic reservoir; and hydraulic fluid manifold assembly. The APUs are fueled by hydrazine and generate mechanical shaft power to a hydraulic pump that produces hydraulic pressure for the SRB hydraulic system. The APU controller electronics are located in the SRB aft integrated electronic assemblies on the aft ET attach rings. The two separate HPUs and two hydraulic systems are located inside the aft skirt of each SRB between the SRB nozzle and skirt. The HPU components are mounted on the aft skirt between the rock and tilt actuators. The two systems operate from T minus 28 seconds until SRB separation from the orbiter and ET. The two independent hydraulic systems are connected to the rock and tilt servoactuators.

The HPUs and their fuel systems are isolated from each other. Each fuel supply module, or tank, contains 22 pounds of hydrazine. The fuel tank is pressurized with gaseous nitrogen at 400 psi to provide the force to expel via positive expulsion the fuel from the tank to the fuel distribution line. A positive fuel supply to the APU throughout its operation is maintained.

The fuel isolation valve is opened at APU startup to allow fuel to flow to the APU fuel pump and control valves and then to the gas generator. The gas generator's catalytic action decomposes the fuel and creates a hot gas. It feeds the hot gas exhaust product to the APU two-stage gas turbine. Fuel flows primarily through the startup bypass line until the APU speed is such that the fuel pump outlet pressure is greater than the bypass line's, at which point all the fuel is supplied to the fuel pump.

The APU turbine assembly provides mechanical power to the APU gearbox, which drives the APU fuel pump, hydraulic pump and lube oil pump. The APU lube oil pump lubricates the gearbox. The turbine exhaust of each APU flows over the exterior of the gas generator, cooling it and directing it overboard through an exhaust duct.

When the APU speed reaches 100 percent, the APU primary control valve closes and the APU speed is controlled by the APU controller electronics. If the primary control valve logic fails to the open state, the secondary control valve assumes control of the APU at 112 percent speed. Each HPU on an SRB is connected to both servoactuators. One HPU serves as the primary hydraulic source for the servoactuator and the other HPU serves as the secondary hydraulics for the servoactuator. Each servoactuator has a switching valve that allows the secondary hydraulics to power the actuator if the primary hydraulic pressure drops below 2,050 psi. A switch contact on the switching valve will close when the valve is in the secondary position. When the valve is closed, a signal is sent to the APU controller that inhibits the 100 percent APU speed control logic and enables the 112 percent APU speed control logic. The 100 percent APU speed enables one APU/HPU to supply sufficient operating hydraulic pressure to both servoactuators of that SRB.

The APU 100 percent speed corresponds to 72,000 rpm, 110 percent to 79,200 rpm and 112 percent to 80,640 rpm.

The hydraulic pump speed is 3,600 rpm and supplies hydraulic pressure of 3,050, plus or

minus 50 psi. A high-pressure relief valve provides overpressure protection to the hydraulic system and relieves at 3,750 psi.

The APUs/HPUs and hydraulic systems are reusable for 20 missions.

Thrust Vector Control (TVC)

Each SRB has two hydraulic gimbal servoactuators: one for rock and one for tilt. The servoactuators provide the force and control to gimbal the nozzle for TVC. The all-axis gimbaling capability is 8 degrees. Each nozzle has a carbon cloth liner that erodes and chars during firing. The nozzle is a convergent-divergent, movable design in which an aft pivot-point flexible bearing is the gimbal mechanism.

The space shuttle ascent TVC portion of the flight control system directs the thrust of the three SSMEs and the two SRB nozzles to control shuttle attitude and trajectory during liftoff and ascent. Commands from the guidance system are transmitted to the ascent TVC, or ATVC, drivers, which transmit signals proportional to the commands to each servoactuator of the main engines and SRBs. Four independent flight control system channels and four ATVC channels control six main engine and four SRB ATVC drivers, with each driver controlling one hydraulic port on each main and SRB servoactuator.

Each SRB servoactuator consists of four independent, two-stage servovalves that receive signals from the drivers. Each servovalve controls one power spool in each actuator, which positions an actuator ram and the nozzle to control the direction of thrust.

The four servovalves in each actuator provide a force-summed majority voting arrangement to position the power spool. With four identical commands to the four servovalves, the actuator force-sum action prevents a single erroneous command from affecting power ram motion. If the erroneous command persists for more than a predetermined time, differential pressure sensing activates a selector valve to isolate and remove the defective servovalve hydraulic pressure. This permits the remaining channels and servovalves to control the actuator ram spool.

Failure monitors are provided for each channel to indicate which channel has been bypassed. An isolation valve on each channel provides the capability of resetting a failed or bypassed channel.

Each actuator ram is equipped with transducers for position feedback to the thrust vector control system. Within each servoactuator ram is a splashdown load relief assembly to cushion the nozzle at water splashdown and prevent damage to the nozzle flexible bearing.

SRB Rate Gyro Assemblies (RGAs)

Each SRB contains two RGAs mounted in the forward skirt watertight compartment. Each RGA contains two orthogonally mounted gyroscopes – pitch and yaw axes. In conjunction with the orbiter roll rate gyros, they provide angular rate information that describes the inertial motion of the vehicle cluster to the orbiter computers and the guidance, navigation and control system during first stage ascent to SRB separation. At SRB separation, all guidance control data is handed off from the SRB RGAs to the orbiter RGAs. The RGAs are designed and qualified for 20 missions.

Propellant

The propellant mixture in each SRB motor consists of ammonium perchlorate, an oxidizer, 69.6 percent by weight; aluminum, a fuel, 16 percent by weight; iron oxide, a catalyst, 0.4 percent by weight; polymer, a binder that holds the mixture together, 12.04 percent by weight; and epoxy curing agent, 1.96 percent by weight. The propellant is an 11-point star-shaped perforation in the forward motor segment and a double truncated cone perforation in each of the aft segments and aft closure. This configuration provides high thrust at ignition and then reduces the thrust by about one-third 50 seconds after liftoff to prevent overstressing the vehicle during maximum dynamic pressure.

SRB Ignition

SRB ignition can occur only when a manual lock pin from each SRB safe and arm device has been removed by the ground crew during prelaunch activities. At T minus 5 minutes, the SRB safe and arm device is rotated to the arm position. The solid rocket motor ignition commands are issued when the three SSMEs are at or above 90 percent rated thrust; no SSME fail and/or SRB ignition pyrotechnic initiator controller, or PIC low voltage is indicated; and there are no holds from the launch processing system, or LPS.

The solid rocket motor ignition commands are sent by the orbiter computers through the master events controllers, or MECs, to the NSDs installed in the safe and arm device in each SRB. A pyrotechnic initiation controller, or PIC, is a single-channel capacitor discharge device that controls the firing of each pyrotechnic device. Three signals must be present simultaneously for the PIC to generate the pyro firing output. These signals – arm, fire 1 and fire 2 – originate in the orbiter general-purpose computers and are transmitted to the MECs. The MECs reformat them to 28 V dc signals for the PICs. The arm signal charges the PIC capacitor to 40 V dc, minimum 20 V dc.

The fire 2 commands cause the redundant NSDs to fire through a thin barrier seal down a flame tunnel. This ignites a pyro booster charge, which is retained in the safe and arm device behind a perforated plate. The booster charge ignites the propellant in the igniter initiator; and combustion products of this propellant ignite the solid rocket motor igniter, which fires down the length of the solid rocket motor igniting the solid rocket motor propellant.

The general purpose computer, or GPC, launch sequence also controls certain critical main propulsion system valves and monitors the engine-ready indications from the SSMEs. The main propulsion system, or MPS, start commands are issued by the on-board computers at T minus 6.6 seconds. There is a staggered start – engine three, engine two, engine one – within 0.25 of a second, and the sequence monitors the thrust buildup of each engine. All three SSMEs must reach the required 90 percent thrust within three seconds; otherwise, an orderly shutdown is commanded and safing functions are initiated.

Normal thrust buildup to the required 90 percent thrust level will result in the SSMEs being commanded to the liftoff position at T minus 3 seconds as well as the fire 1 command being issued to arm the SRBs. At T minus 3 seconds, the vehicle base bending load modes are allowed to initialize.

At T minus 0, the two SRBs are ignited by the four orbiter on-board computers; commands are sent to release the SRBs; the two T-0 umbilicals, one on each side of the spacecraft, are retracted; the on-board master timing unit, event timer and mission event timers are started; the three SSMEs are at 100 percent; and the ground launch sequence is terminated.

SRB Separation

The SRB/ET separation subsystem provides for separation of the SRBs from the orbiter/ET without damage to or recontact of the elements – SRBs, orbiter/ET – during or after separation for nominal modes. SRB separation is initiated when the three solid rocket motor chamber pressure transducers are processed in the redundancy management middle value select and the head end chamber pressure of both SRBs is less than or equal to 50 psi. A backup cue is the time elapsed from booster ignition.

The separation sequence is initiated, commanding the thrust vector control actuators to the null position and putting the main propulsion system into a second-stage configuration 0.8 second from sequence initialization, which ensures the thrust of each SRB is less than 100,000 pounds. Orbiter yaw attitude is held for four seconds and SRB thrust drops to less than 60,000 pounds. The SRBs separate from the ET within 30 milliseconds of the ordnance firing command.

The forward attachment point consists of a ball on the SRB and socket on the ET, held together by one bolt. The bolt contains one NSD pressure cartridge at each end. The forward attachment point also carries the range safety system cross-strap wiring connecting each SRB range safety system, or RSS, and the ET RSS with each other.

The aft attachment points consist of three separate struts: upper, diagonal, and lower. Each strut contains one bolt with an NSD pressure cartridge at each end. The upper strut also carries the umbilical interface between its SRB and the external tank and on to the orbiter.

Redesigned Booster Separation Motors (RBSM)

Eight Booster Separation Motors, or BSMs, are located on each booster – four on the forward section and four on the aft skirt. BSMs provide the force required to push the SRBs away from the orbiter/ET at separation. Each BSM weighs approximately 165 pounds and is 31.1 inches long and 12.8 inches in diameter. Once the SRBs have completed their flight, the BSMs are fired to jettison the SRBs away from the orbiter and external tank, allowing the boosters to parachute to Earth and be reused. The BSMs in each cluster of four are ignited by firing redundant NSD pressure cartridges into redundant confined detonating fuse manifolds. The separation commands issued from the orbiter by the SRB separation sequence initiate the redundant NSD pressure cartridge in each bolt and ignite the BSMs to effect a clean separation.

Redesigned BSMs flew for the first time in both forward and aft locations on STS-125. As a result of vendor viability and manifest support issues, space shuttle BSMs are now being manufactured by ATK. The igniter has been redesigned and other changes include material upgrades driven by obsolescence issues and improvements to process and inspection techniques.

SRB Cameras

Each SRB flies with a complement of four cameras, three mounted for exterior views

during launch, separation and descent; and one mounted internal to the forward dome for main parachute performance assessment during descent.

The ET observation camera is mounted on the SRB forward skirt and provides a wide-angle view of the ET intertank area. The camera is activated at lift off by a G-switch and records for 350 seconds, after which the recorder is switched to a similar camera in the forward skirt dome to view the deployment and performance of the main parachutes to splash down. These cameras share a digital tape recorder located within the data acquisition system.

The ET ring camera is mounted on the ET attach ring and provides a view up the stacked vehicle on the orbiter underside and the bipod strut attach point.

The forward skirt camera is mounted on the external surface of the SRB forward skirt and provides a view aft down the stacked vehicle of the orbiter underside and the wing leading edge reinforced carbon-carbon, or RCC, panels.

The ET attach ring camera and forward skirt camera are activated by a global positioning system command at approximately T minus 1 minute 56 seconds to begin recording at approximately T minus 50 seconds. The camera images are recorded through splash down. These cameras each have a dedicated recorder and are recorded in a digital format. The cameras were designed, qualified, and implemented by USA after Columbia to provide enhanced imagery capabilities to capture potential debris liberation beginning with main engine start and continuing through SRB separation.

The camera videos are available for engineering review approximately 24 hours following the arrival of the boosters at KSC.

Range Safety Systems (RSS)

The RSS consists of two antenna couplers; command receivers/decoders; a dual distributor; a safe and arm device with two NSDs; two confined detonating fuse manifolds; seven confined detonator fuse, or CDF assemblies; and one linear-shaped charge.

The RSS provides for destruction of a rocket or part of it with on-board explosives by remote command if the rocket is out of control, to limit danger to people on the ground from crashing pieces, explosions, fire, and poisonous substances.

The space shuttle has two RSSs, one in each SRB. Both are capable of receiving two command messages – arm and fire – which are transmitted from the ground station. The RSS is only used when the space shuttle violates a launch trajectory red line.

The antenna couplers provide the proper impedance for radio frequency and ground support equipment commands. The command receivers are tuned to RSS command frequencies and provide the input signal to the distributors when an RSS command is sent. The command decoders use a code plug to prevent any command signal other than the proper command signal from getting into the distributors. The distributors contain the logic to supply valid destruct commands to the RSS pyrotechnics.

The NSDs provide the spark to ignite the CDF that in turn ignites the linear-shaped charge for space shuttle destruction. The safe and arm device provides mechanical isolation between

the NSDs and the CDF before launch and during the SRB separation sequence.

The first message, called arm, allows the onboard logic to enable a destruct and illuminates a light on the flight deck display and control panel at the commander and pilot station. The second message transmitted is the fire command. The SRB distributors in the SRBs are cross-strapped together. Thus, if one SRB received an arm or destruct signal, the signal would also be sent to the other SRB.

Electrical power from the RSS battery in each SRB is routed to RSS system A. The recovery battery in each SRB is used to power RSS system B as well as the recovery system in the SRB. The SRB RSS is powered down during the separation sequence, and the SRB recovery system is powered up.

Descent and Recovery

After separation and at specified altitudes, the SRB forward avionics system initiates the release of the nose cap, which houses a pilot parachute and drogue parachute; and the frustum, which houses the three main parachutes. Jettison of the nose cap at 15,700 feet deploys a small pilot parachute and begins to slow the SRB decent. At an altitude of 15,200 feet the pilot parachute pulls the drogue parachute from the frustum. The drogue parachute fully inflates in stages, and at 5,500 feet pulls the frustum away from the SRB, which initiates the deployment of the three main parachutes. The parachutes also inflate in stages and further slow the decent of the SRBs to their final velocity at splashdown. The parachutes slow each SRB from 368 mph at first deployment to 52 mph at splashdown, allowing for the recovery and reuse of the boosters.

Two 176-foot recovery ships, Freedom Star and Liberty Star, are on station at the splashdown zone to retrieve the frustums with drogue parachutes attached, the main parachutes and the SRBs. The SRB nose caps and solid rocket motor nozzle extensions are not recovered. The SRBs are dewatered using an enhanced diver operating plug to facilitate tow back. These plugs are inserted into the motor nozzle and air is pumped into the booster, causing it to lay flat in the water to allow it to be easily towed. The boosters are then towed back to the refurbishment facilities. Each booster is removed from the water and components are disassembled and washed with fresh and deionized water to limit saltwater corrosion. The motor segments, igniter and nozzle are shipped back to ATK in Utah for refurbishment. The nonmotor components and structures are disassembled by USA and are refurbished to like-new condition at both KSC and equipment manufacturers across the country.

SPACE SHUTTLE SUPER LIGHT WEIGHT TANK (SLWT)

The super lightweight external tank (SLWT) made its first shuttle flight June 2, 1998, on mission STS-91. The SLWT is 7,500 pounds lighter than the standard external tank. The lighter weight tank allows the shuttle to deliver International Space Station elements (such as the service module) into the proper orbit.

The SLWT is the same size as the previous design. But the liquid hydrogen tank and the liquid oxygen tank are made of aluminum lithium, a lighter, stronger material than the metal alloy used for the shuttle's current tank. The tank's structural design has also been

improved, making it 30 percent stronger and 5 percent less dense.

The SLWT, like the standard tank, is manufactured at NASA's Michoud Assembly Facility, near New Orleans, by Lockheed Martin.

The 154-foot-long external tank is the largest single component of the space shuttle. It stands taller than a 15-story building and has a diameter of about 27 feet. The external tank holds over 530,000 gallons of liquid hydrogen and liquid oxygen in two separate tanks. The hydrogen (fuel) and liquid oxygen (oxidizer) are used as propellants for the shuttle's three main engines.

EXTERNAL TANK

The 154-foot-long external tank is the largest single component of the space shuttle. It stands taller than a 15-story building and has a diameter of about 27 feet. The external tank holds more than 530,000 gallons of liquid hydrogen and liquid oxygen in two separate tanks, the forward liquid oxygen tank and the aft liquid hydrogen tank. An unpressurized intertank unites the two propellant tanks.

Liquid hydrogen (fuel) and liquid oxygen (oxidizer) are used as propellants for the shuttle's three main engines. The external tank weighs 58,500 pounds empty and 1,668,500 pounds when filled with propellants.

The external tank is the "backbone" of the shuttle during launch, providing structural support for attachment with the solid rocket boosters and orbiter. It is the only component of the shuttle that is not reused. Approximately 8.5 minutes after reaching orbit, with its propellant used, the tank is jettisoned and falls in a preplanned trajectory. Most of the tank disintegrates in the atmosphere, and the remainder falls into the ocean.

The external tank is manufactured at NASA's Michoud Assembly Facility in New Orleans by Lockheed Martin Space Systems.

Foam Facts

The external tank is covered with spray-on foam insulation that insulates the tank before and during launch. More than 90 percent of the tank's foam is applied using an automated system, leaving less than 10 percent to be applied manually.

There are two types of foam on the external tank, known as the Thermal Protection System, or TPS. One is low-density, closed-cell foam on the tank acreage and is known as Spray-On-Foam-Insulation, often referred to by its acronym, SOFI. Most of the tank is covered by either an automated or manually applied SOFI. Most areas around protuberances, such as brackets and structural elements, are applied by pouring foam ingredients into part-specific molds. The other is a denser composite material made of silicone resins and cork and called ablator. An ablator is a material that dissipates heat by eroding. It is used on areas of the external tank subjected to extreme heat, such as the aft dome near the engine exhaust, and remaining protuberances, such as the cable trays. These areas are exposed to extreme aerodynamic heating.

Closed-cell foam used on the tank was developed to keep the propellants that fuel the shuttle's three main engines at optimum temperature. It keeps the shuttle's liquid hydrogen fuel at -423 degrees Fahrenheit and the liquid oxygen tank at near

-297 degrees Fahrenheit, even as the tank sits under the hot Florida sun. At the same time, the foam prevents a buildup of ice on the outside of the tank.

The foam insulation must be durable enough to endure a 180-day stay at the launch pad, withstand temperatures up to 115 degrees Fahrenheit, humidity as high as 100 percent, and resist sand, salt, fog, rain, solar radiation and even fungus. Then, during launch, the foam must tolerate temperatures as high as 2,200 degrees Fahrenheit generated by aerodynamic friction and radiant heating from the 3,000 degrees Fahrenheit main engine plumes. Finally, when the external tank begins reentry into the Earth's atmosphere about 30 minutes after launch, the foam maintains the tank's structural temperatures and allows it to safely disintegrate over a remote ocean location.

Though the foam insulation on the majority of the tank is only 1-inch thick, it adds 4,823 pounds to the tank's weight. In the areas of the tank subjected to the highest heating, insulation is somewhat thicker, between 1.5 to 3 inches thick. Though the foam's density varies with the type, an average density is about 2.4 pounds per cubic foot.

Application of the foam, whether automated by computer or hand-sprayed, is designed to meet NASA's requirements for finish, thickness, roughness, density, strength and adhesion. As in most assembly production situations, the foam is applied in specially designed, environmentally controlled spray cells and applied in several phases, often over a period of several weeks. Before spraying, the foam's raw material and mechanical properties are tested to ensure they meet NASA specifications. Multiple visual inspections of all foam surfaces are performed after the spraying is complete.

Most of the foam is applied at NASA's Michoud Assembly Facility in New Orleans when the tank is manufactured, including most of the "closeout" areas, or final areas applied. These closeouts are done either by hand pouring or manual spraying. Additional closeouts are completed once the tank reaches NASA's Kennedy Space Center, Fla.

The super lightweight external tank, or SLWT, made its first shuttle flight in June 1998 on mission STS-91. The SLWT is 7,500 pounds lighter than previously flown tanks. The SLWT is the same size as the previous design, but the liquid hydrogen tank and the liquid oxygen tank are made of aluminum lithium, a lighter, stronger material than the metal alloy used previously.

Beginning with the first Return to Flight mission, STS-114 in June 2005, several improvements were made to improve safety and flight reliability.

Forward Bipod

The external tank's forward shuttle attach fitting, called the bipod, was redesigned to eliminate the large insulating foam ramps as a source of debris. Each external tank has two bipod fittings that connect the tank to the orbiter through the shuttle's two forward attachment struts. Four rod heaters were placed below each forward bipod, replacing the large insulated foam Protuberance Airload, or PAL, ramps.

Liquid Hydrogen Tank & Liquid Oxygen Intertank Flange Closeouts

The liquid hydrogen tank flange located at the bottom of the intertank and the liquid oxygen tank flange located at the top of the intertank provide joining mechanisms with the intertank.

After each of these three component tanks, liquid oxygen, intertank and liquid hydrogen, are joined mechanically, the flanges at both ends are insulated with foam. An enhanced closeout, or finishing, procedure was added to improve foam application to the stringer, or intertank ribbing, and to the upper and lower area of both the liquid hydrogen and liquid oxygen intertank flanges.

Liquid Oxygen Feedline Bellows

The liquid oxygen feedline bellows were reshaped to include a "drip lip" that allows condensate moisture to run off and prevent freezing. A strip heater was added to the forward bellow to further reduce the potential of high density ice or frost formation. Joints on the liquid oxygen feedline assembly allow the feedline to move during installation and during liquid hydrogen tank fill. Because it must flex, it cannot be insulated with foam like the remainder of the tank.

Other tank improvements include:

Liquid Oxygen & Liquid Hydrogen Protuberance Airload (PAL) Ramps

External tank ET-119, which flew on the second Return to Flight mission, STS-121, in July 2006, was the first tank to fly without PAL ramps along portions of the liquid oxygen and liquid hydrogen tanks. These PAL ramps were extensively studied and determined to not be necessary for their original purpose, which was to protect cable trays from aeroelastic instability during ascent. Extensive tests were conducted to verify the shuttle could fly safely without these particular PAL ramps. Extensions were added to the ice frost ramps for the pressline and cable tray brackets, where these PAL ramps were removed to make the geometry of the ramps consistent with other locations on the tank and thereby provide consistent aerodynamic flow. Nine extensions were added, six on the liquid hydrogen tank and three on the liquid oxygen tank.

Engine Cutoff (ECO) Sensor Modification

Beginning with STS-122, ET-125, which launched on Feb. 7, 2008, the ECO sensor system feed-through connector on the liquid hydrogen tank was modified by soldering the connector's pins and sockets to address false readings in the system. All subsequent tanks after ET-125 have the same modification.

Liquid Hydrogen Tank Ice Frost Ramps

ET-128, which flew on the STS-124 shuttle mission, May 31, 2008, was the first tank to fly with redesigned liquid hydrogen tank ice frost ramps. Design changes were incorporated at all 17 ice frost ramp locations on the liquid hydrogen tank, stations 1151 through 2057, to reduce foam loss. Although the redesigned ramps appear identical to the previous design, several changes were made. PDL* and NCFI foam have been replaced with BX* manual spray foam in the ramp's base cutout to reduce debonding and cracking; Pressline and cable tray bracket feet corners have been rounded to reduce stresses; shear pin holes have been sealed to reduce leak paths; isolators were primed to promote adhesion; isolator corners were rounded to help reduce thermal protection system foam stresses; BX manual spray was applied in bracket pockets to reduce geometric voids.

*BX is a type of foam used on the tank's "loseout," or final finished areas; it is applied manually or hand-sprayed. PDL is an acronym for Product Development Laboratory, the first

supplier of the foam during the early days of the external tank's development. PDL is applied by pouring foam ingredients into a mold. NCFI foam is used on the aft dome, or bottom, of the liquid hydrogen tank.

Liquid Oxygen Feedline Brackets

ET-128 also was the first tank to fly with redesigned liquid oxygen feedline brackets. Titanium brackets, much less thermally conductive than aluminum, replaced aluminum brackets at four locations, XT 1129, XT 1377, Xt 1624 and Xt 1871. This change minimizes ice formation in under-insulated areas, and reduces the amount of foam required to cover the brackets and the propensity for ice development. Zero-gap/slip plane Teflon material was added to the upper outboard monoball attachment to eliminate ice adhesion. Additional foam has been added to the liquid oxygen feedline to further minimize ice formation along the length of the feedline.

LAUNCH AND LANDING

LAUNCH

As with all previous space shuttle launches, Atlantis has several options to abort its ascent if needed after engine failures or other systems problems. Shuttle launch abort philosophy is intended to facilitate safe recovery of the flight crew and intact recovery of the orbiter and its payload.

Abort modes include:

ABORT-TO-ORBIT (ATO)

This mode is used if there is a partial loss of main engine thrust late enough to permit reaching a minimal 105 by 85 nautical mile orbit with the orbital maneuvering system engines. The engines boost the shuttle to a safe orbital altitude when it is impossible to reach the planned orbital altitude.

TRANSATLANTIC ABORT LANDING (TAL)

The loss of one or more main engines midway through powered flight would force a landing at either Zaragoza, Spain; Moron, Spain; or Istres, France. For launch to proceed, weather conditions must be acceptable at one of these TAL sites.

RETURN-TO-LAUNCH-SITE (RTLS)

If one or more engines shut down early and there is not enough energy to reach Zaragoza, the shuttle would pitch around toward Kennedy until within gliding distance of the Shuttle Landing Facility. For launch to proceed, weather conditions must be forecast to be acceptable for a possible RTLS landing at KSC about 20 minutes after liftoff.

ABORT ONCE AROUND (AOA)

An AOA is selected if the vehicle cannot achieve a viable orbit or will not have enough propellant to perform a deorbit burn, but has enough energy to circle the Earth once and land about 90 minutes after liftoff.

LANDING

The primary landing site for Atlantis on STS-132 is the Kennedy Space Center's Shuttle Landing Facility. Alternate landing sites that could be used if needed because of weather conditions or systems failures are at Edwards Air Force Base, Calif., and White Sands Space Harbor, N.M.

This page intentionally blank

ACRONYMS AND ABBREVIATIONS

2D-Nano Template	Two Dimensional Nano Template
3D-Space	Mental Representation of Spatial Cues during Spaceflight
A/G	Alignment Guides
A/L	Airlock
AAA	Avionics Air Assembly
ABC	Audio Bus Controller
ABRS	Advanced Biological Research System
ACBM	Active Common Berthing Mechanism
ACDU	Airlock Control and Display Unit
ACO	Assembly Checkout Officer
ACS	Atmosphere Control and Supply
ACU	Arm Control Unit
ADS	Audio Distribution System
AE	Approach Ellipsoid
AEP	Airlock Electronics Package
AI	Approach Initiation
AIS	Automatic Identification System
AJIS	Alpha Joint Interface Structure
ALI	Alice-Like Insert
ALTEA-Shield	Anomalous Long Term Effects on Astronauts Central Nervous System-Shield
AM	Atmosphere Monitoring
AMOS	Air Force Maui Optical and Supercomputing Site
AOH	Assembly Operations Handbook
APAS	Androgynous Peripheral Attachment
APCU	Assembly Power Converter Unit
APE	Antenna Pointing Electronics
	Audio Pointing Equipment
APFR	Articulating Portable Foot Restraint
APM	Antenna Pointing Mechanism
APS	Automated Payload Switch
APV	Automated Procedure Viewer
AR	Atmosphere Revitalization
ARCU	American-to-Russian Converter Unit
ARS	Atmosphere Revitalization System
ASW	Application Software
ATA	Ammonia Tank Assembly
ATCS	Active Thermal Control System
ATU	Audio Terminal Unit

BAC	Boom Attached Cables
BAD	Broadcast Ancillary Data
BC	Bus Controller
BCDU	Battery Charge/Discharge Unit
	Berthing Mechanism Control and Display Unit
BEP	Berthing Mechanism Electronics Package
BGA	Beta Gimbal Assembly
BIC	Bus Interface Controller
BIT	Built-In Test
BLT	Boundary Layer Transition
BM	Berthing Mechanism
BOS	BIC Operations Software
BRIC	Biological Research in Canisters
BSS	Basic Software
BSTS	Basic Standard Support Software
C&C	Command and Control
C&DH	Command and Data Handling
C&T	Communication and Tracking
C&W	Caution and Warning
C/L	Crew Lock
C/O	Checkout
CAM	Collision Avoidance Maneuver
CAPE	Canister for All Payload Ejections
CAPPS	Checkout, Assembly and Payload Process Services
CAS	Common Attach System
CB	Control Bus
CBCS	Centerline Berthing Camera System
CBM	Common Berthing Mechanism
CCA	Circuit Card Assembly
CCAA	Common Cabin Air Assembly
CCF	Capillary Chanel Flow
CCIS	Cardiovascular and Cerebrovacular on Return from Space Station
CCM	Cell Culture Module
CCP	Camera Control Panel
CCT	Communication Configuration Table
CCTV	Closed-Circuit Television
CDR	Space Shuttle Commander
CDRA	Carbon Dioxide Removal Assembly
CETA	Crew Equipment Transfer Aid
	Crew Equipment Translation Aid
CFE-2	Capillary Flow Experiment-2

CHeCS	Crew Health Care System
CHX	Cabin Heat Exchanger
CISC	Complicated Instruction Set Computer
CLA	Camera Light Assembly
CLPA	Camera Light Pan Tilt Assembly
CLSM-2	Coarsening in Solid Liquid Mixtures
CMG	Control Moment Gyro
COTS	Commercial Off the Shelf
CPA	Control Panel Assembly
CPB	Camera Power Box
CQ	Crew Quarters
CR	Change Request
CRT	Cathode-Ray Tube
CSA	Canadian Space Agency
CSA-CP	Compound Specific Analyzer
CTC	Cargo Transport Container
CVB	Constrained Vapor Bubble
CVIU	Common Video Interface Unit
CVT	Current Value Table
CZ	Communication Zone
DB	Data Book
DC	Docking Compartment
DCB	Double Coldbag
DCSU	Direct Current Switching Unit
DDCU	DC-to-DC Converter Unit
DECLIC-HTI	DEvice for the Study of Critical Liquids and Crystalization-High Temperature Insert
DEM	Demodulator
DFL	Decommutation Format Load
DIU	Data Interface Unit
DMS	Data Management System
DMS-R	Data Management System-Russian
DOSIS-DOBIES	Dose Distribution Inside ISS – Dosimetry for Biological Experiments in Space
DPG	Differential Pressure Gauge
DPU	Baseband Data Processing Unit
DRTS	Japanese Data Relay Satellite
DSO	Detailed Supplementary Objective
DTO	Detailed Test Objective
DYF	Display Frame

E/L	Equipment Lock
EATCS	External Active Thermal Control System
EBCS	External Berthing Camera System
ECC	Error Correction Code
ECLSS	Environmental Control and Life Support System
ECS	Environmental Control System
ECU	Electronic Control Unit
EDAS	Enhanced Data Acquisition System
EDSU	External Data Storage Unit
EDU	EEU Driver Unit
EE	End Effector
EETCS	Early External Thermal Control System
EEU	Experiment Exchange Unit
EF	Exposed Facility
EFBM	Exposed Facility Berthing Mechanism
EFHX	Exposed Facility Heat Exchanger
EFU	Exposed Facility Unit
EGIL	Electrical, General Instrumentation, and Lighting
EIU	Ethernet Interface Unit
ELC	ExPRESS Logistics Carrier
ELM-ES	Japanese Experiment Logistics Module – Exposed Section
ELM-PS	Japanese Experiment Logistics Module – Pressurized Section
ELPS	Emergency Lighting Power Supply
EMGF	Electric Mechanical Grapple Fixture
EMI	Electro-Magnetic Imaging
EMU	Extravehicular Mobility Unit
EOTP	Enhanced Orbital Replaceable Unit (ORU) Temporary Platform
EP	Exposed Pallet
EPO	Education Payload Operations
EPO-Robo	Education Payload Operations – Robotics
EPS	Electrical Power System
ES	Exposed Section
ESA	European Space Agency
ESC	JEF System Controller
ESP-3	External Stowage Platform 3
ESW	Extended Support Software
ET	External Tank
ETCS	External Thermal Control System
ETI	Elapsed Time Indicator
ETRS	EVA Temporary Rail Stop
ETVCG	External Television Camera Group
EV	Extravehicular

EVA	Extravehicular Activity
EXP-D	Experiment-D
EXPRESS	EXpedite the PRocessing of Experiments to Space Station
EXT	External
FA	Fluid Accumulator
FAS	Flight Application Software
FCT	Flight Control Team
FD	Flight Day
FDDI	Fiber Distributed Data Interface
FDIR	Fault Detection, Isolation, and Recovery
FDS	Fire Detection System
FE	Flight Engineer
FET-SW	Field Effect Transistor Switch
FGB	Functional Cargo Block
FOR	Frame of Reference
FPMU	Floating Potential Measurement Unit
FPP	Fluid Pump Package
FR	Flight Rule
FRD	Flight Requirements Document
FRGF	Flight Releasable Grapple Fixture
FRM	Functional Redundancy Mode
FSE	Flight Support Equipment
FSEGF	Flight Support Equipment Grapple Fixture
FSW	Flight Software
GAS	Get-Away Special
GATOR	Grappling Adaptor to On-orbit Railing
GCA	Ground Control Assist
GLA	General Lighting Assemblies
	General Luminaire Assembly
GLACIER	General Laboratory Active Cryogenic ISS Experiment Refrigerator
GLONASS	Global Navigational Satellite System
GNC	Guidance, Navigation, and Control
GPC	General Purpose Computer
GPS	Global Positioning System
GPSR	Global Positioning System Receiver
GUI	Graphical User Interface
H&S	Health and Status
HCE	Heater Control Equipment
HCTL	Heater Controller
HEPA	High Efficiency Particulate Acquisition

HPA	High Power Amplifier
HPGT	High Pressure Gas Tank
HPP	Hard Point Plates
HRDR	High Rate Data Recorder
HREL	Hold/Release Electronics
HRF	Human Research Facility
HRFM	High Rate Frame Multiplexer
HRM	Hold Release Mechanism
HRMS	High Rate Multiplexer and Switcher
HTV	H-II Transfer Vehicle
HTVCC	HTV Control Center
HTV Prox	HTV Proximity
HX	Heat Exchanger
I/F	Interface
IAA	Intravehicular Antenna Assembly
IAC	Internal Audio Controller
IBM	International Business Machines
ICB	Inner Capture Box
ICC	Integrated Cargo Carrier
ICC-VLD	Integrated Cargo Carrier – Vertical Lightweight Deployable
ICS	Interorbit Communication System
ICS-EF	Interorbit Communication System – Exposed Facility
IDRD	Increment Definition and Requirements Document
IEA	Integrated Equipment Assembly
IELK	Individual Equipment Liner Kit
IF	Intermediate Frequency
IFHX	Interface Heat Exchanger
IMCS	Integrated Mission Control System
IMCU	Image Compressor Unit
IMV	Intermodule Ventilation
INCO	Instrumentation and Communication Officer
IP	Interface Plate
	International Partner
IP-PCDU	ICS-PM Power Control and Distribution Unit
IP-PDB	Payload Power Distribution Box
IPV	Individual Pressure Vessel
ISP	International Standard Payload
ISPR	International Standard Payload Rack
ISS	International Space Station
ISSSH	International Space Station Systems Handbook
ITCS	Internal Thermal Control System

ITS	Integrated Truss Segment
IVA	Intravehicular Activity
IVGEN	IntraVenous Fluid GENeration for Exploration Missions
IVSU	Internal Video Switch Unit
JAXA	Japan Aerospace Exploration Agency
JCP	JEM Control Processor
JEF	JEM Exposed Facility
JEM	Japanese Experiment Module
JEM-EF	Japanese Experiment Module Exposed Facility
JEM-PM	Japanese Experiment Module – Pressurized Module
JEMAL	JEM Airlock
JEMRMS	Japanese Experiment Module Remote Manipulator System
JEUS	Joint Expedited Undocking and Separation
JFCT	Japanese Flight Control Team
JLE	Japanese Experiment Logistics Module – Exposed Section
JLP	Japanese Experiment Logistics Module – Pressurized Section
JLP-EDU	JLP-EFU Driver Unit
JLP-EFU	JLP Exposed Facility Unit
JPM	Japanese Pressurized Module
JPM WS	JEM Pressurized Module Workstation
JSC	Johnson Space Center
JTVE	JEM Television Equipment
Kbps	Kilobit per second
KOS	Keep Out Sphere
LB	Local Bus
LCA	LAB Cradle Assembly
LCD	Liquid Crystal Display
LCS	Laser Camera System
LED	Light Emitting Diode
LEE	Latching End Effector
LEO	Low Earth Orbit
LIDAR	Light Detection and Ranging
LMC	Lightweight Multipurpose Experiment Support Structure Carrier
LMM	Light Microscopy Module
LSW	Light Switch
LTA	Launch-to-Activation
LTAB	Launch-to-Activation Box
LTL	Low Temperature Loop

MA	Main Arm
MARES	Muscle Atrophy Research and Exercise System
MAUI	Main Analysis of Upper-Atmospheric Injections
Mb	Megabit
Mbps	Megabit per second
MBS	Mobile Base System
MBSU	Main Bus Switching Unit
MCA	Major Constituent Analyzer
MCC	Mission Control Center
MCC-H	Mission Control Center – Houston
MCC-M	Mission Control Center – Moscow
MCDS	Multifunction Cathode-Ray Tube Display System
MCS	Mission Control System
MDA	MacDonald, Dettwiler and Associates Ltd.
MDM	Multiplexer/Demultiplexer
MDP	Management Data Processor
MELFI	Minus Eighty-Degree Laboratory Freezer for ISS
MERLIN	Microgravity Experiment Research Locker Incubator II
MGB	Middle Grapple Box
Micro-2	Microbiology-2
Microbe-1	Microbial Dynamics in International Space Station
MIP	Mission Integration Plan
MISSE	Materials International Space Station Experiment
MKAM	Minimum Keep Alive Monitor
MLE	Middeck Locker Equivalent
MLI	Multi-layer Insulation
MLM	Multipurpose Laboratory Module
MMOD	Micrometeoroid/Orbital Debris
MOD	Modulator
MON	Television Monitor
MPC	Main Processing Controller
MPESS	Multi-Purpose Experiment Support Structure
MPEV	Manual Pressure Equalization Valve
MPL	Manipulator Retention Latch
MPLM	Multi-Purpose Logistics Module
MPM	Manipulator Positioning Mechanism
MPV	Manual Procedure Viewer
MRM-1	Mini-Research Module-1
MSD	Mass Storage Device
MSFC	Marshall Space Flight Center
MSL-CETSOL	Material Science Laboratory – Columnar-to-Equiaxcol Transition in Solidification
MSP	Maintenance Switch Panel

MSS	Mobile Servicing System
MT	Mobile Tracker
	Mobile Transporter
MTL	Moderate Temperature Loop
MUX	Data Multiplexer
Myco-2	Mycological Evaluation of Crew Exposure to Space Station Ambient Air-2
MyoLab	Molecular Mechanism of Micrograivty-Induced Skeletal Muscle Atrophy
n.mi.	nautical mile
NASA	National Aeronautics and Space Administration
NCS	Node Control Software
NET	No Earlier Than
NeuroRad	Biological Effects of Space Radiation and Microgravity on Mammalian Cells
Ni-H2	Nickel Hydrogen
NLP	National Lab Pathfinder
NLP-Cells-4	National Lab Pathfinder-Cells-4
NLP-Vaccine-9	National Lab Pathfinder-Vaccine-9
NLT	No Less Than
NPGS	Naval post Graduate School
NPRV	Negative Pressure Relief Valve
NSV	Network Service
NTA	Nitrogen Tank Assembly
NTSC	National Television Standard Committee
NUTRITION	Nutritional Status Assessment
OBSS	Orbiter Boom Sensor System
OCA	Orbital Communications Adapter
OCAD	Operational Control Agreement Document
OCAS	Operator Commanded Automatic Sequence
ODF	Operations Data File
ODS	Orbiter Docking System
OI	Orbiter Interface
OIU	Orbiter Interface Unit
OMS	Orbital Maneuvering System
OODT	Onboard Operation Data Table
OPT	Operational Pressure Tranducers
ORCA	Oxygen Recharge Compressor Assembly
ORU	Orbital Replacement Unit
OS	Operating System
OSA	Orbiter-based Station Avionics
OSE	Orbital Support Equipment

OTCM	ORU and Tool Changeout Mechanism
OTP	ORU and Tool Platform
P3R	Plants, Protocals, Procedures and Requirements
P/L	Payload
PACE	Preliminary Advanced Colloids Experiment
PADLES	Passive Dosimeter for Lifescience Experiment in Space
PAL	Planning and Authorization Letter
PAM	Payload Attach Mechanism
PAO	Public Affairs Office
PAS	Payload Adapter System
PBA	Portable Breathing Apparatus
PCA	Pressure Control Assembly
PCBM	Passive Common Berthing Mechanism
PCN	Page Change Notice
PCS	Portable Computer System
PCU	Plasma Contactor Unit
	Power Control Unit
PDA	Payload Disconnect Assembly
PDB	Power Distribution Box
PDGF	Power and Data Grapple Fixture
PDH	Payload Data Handling unit
PDRS	Payload Deployment Retrieval System
PDU	Power Distribution Unit
PEC	Passive Experiment Container
PEHG	Payload Ethernet Hub Gateway
PEMS II	Percutaneous Electrical Muscle Stimulator
PFE	Portable Fire Extinguisher
PFRAM	Passive Flight Releasable Attachment Mechanism
PGSC	Payload General Support Computer
PIB	Power Interface Box
PIU	Payload Interface Unit
PLB	Payload Bay
PLBD	Payload Bay Door
PLC	Pressurized Logistics Carrier
PLT	Payload Laptop Terminal
	Space Shuttle Pilot
PM	Pressurized Module
	Pump Module
PMA	Pressurized Mating Adapter
PMCU	Power Management Control Unit
PMU	Pressurized Mating Adapter

POA	Payload ORU Accommodation
POR	Point of Resolution
PPRV	Positive Pressure Relief Valve
PRCS	Primary Reaction Control System
PREX	Procedure Executor
PRLA	Payload Retention Latch Assembly
PRO	Payload Rack Officer
PROX	Proximity Communications Center
psia	Pounds per Square Inch Absolute
PSP	Payload Signal Processor
PSRR	Pressurized Section Resupply Rack
PTCS	Passive Thermal Control System
PTR	Port Thermal Radiator
PTU	Pan/Tilt Unit
PVCU	Photovoltaic Controller Unit
PVM	Photovoltaic Module
PVR	Photovoltaic Radiator
PVTCS	Photovoltaic Thermal Control System
PWP	Power Work Post
QD	Quick Disconnect
R&MA	Restraint and Mobility Aid
RACU	Russian-to-American Converter Unit
RAM	Read Access Memory
RAMBO	Ram Burn Observations
RBVM	Radiator Beam Valve Module
RCC	Range Control Center
RCT	Rack Configuration Table
Repository	National Aeronautics and Space Administration Biological Specimen Repository
RF	Radio Frequency
RGA	Rate Gyro Assemblies
RHC	Rotational Hand Controller
RIC	Rack Interface Controller
RIGEX	Rigidizable Inflatable Get-Away Special Experiment
RIP	Remote Interface Panel
RLF	Robotic Language File
RLT	Robotic Laptop Terminal
RMS	Remote Manipulator System
ROEU	Remotely Operated Electrical Umbilical
ROM	Read Only Memory
R-ORU	Robotics Compatible Orbital Replacement Unit

ROS	Russian Orbital Segment
RPC	Remote Power Controller
RPCM	Remote Power Controller Module
RPDA	Remote Power Distribution Assembly
RPM	Roll Pitch Maneuver
RS	Russian Segment
RSP	Resupply Stowage Platform
	Return Stowage Platform
RSR	Resupply Stowage Rack
RT	Remote Terminal
RTAS	Rocketdyne Truss Attachment System
RVFS	Rendezvous Flight Software
RWS	Robotics Workstation
SAFER	Simplified Aid for EVA Rescue
SAM	SFA Airlock Attachment Mechanism
SAPA	Small Adapter Plate Assembly
SARJ	Solar Alpha Rotary Joint
SASA	S-Band Antenna Sub-Assembly
SCU	Sync and Control Unit
SD	Smoke Detector
SDS	Sample Distribution System
SDTO	Station Development Test Objective
SEDA	Space Environment Data Acquisition equipment
SEDA-AP	Space Environment Data Acquisition equipment – Attached Payload
SEITE	Shuttle Exhaust Ion Turbulence Experiments
SELS	SpaceOps Electronic Library System
SEU	Single Event Upset
SFA	Small Fine Arm
SFAE	SFA Electronics
SGANT	Space to Ground Antenna
SGAnt	Space to Ground Antenna
SGTRC	Space-to-Ground Transmit Receive Control
SI	Smoke Indicator
SIMPLEX	Shuttle Ionospheric Modification with Pulsed Localized Exhaust Experiments
Sleep-Short	Sleep-Wake Actigraphy and Light Exposure During Spaceflight-Short
SLM	Structural Latch Mechanism
SLP-D	Spacelab Pallet – D
SLP-D1	Spacelab Pallet – Deployable
SLP-D2	Spacelab Pallet – D2
SLT	Station Laptop Terminal
	System Laptop Terminal

SM	Service Module
SMDP	Service Module Debris Panel
SOC	System Operation Control
SODF	Space Operations Data File
SODI-Colloid	Selectable Optical Diagnostics Instrument – Aggregation of Colloidal Suspensions
SODI-DSC	Selectable Optical Diagnostics Instrument – Diffusion and Soret Coefficient
SPA	Small Payload Attachment
SpaceDRUMS	Space Dynamically Responding Ultrasonic Matrix System
SPB	Survival Power Distribution Box
SPDA	Secondary Power Distribution Assembly
SPDM	Special Purpose Dexterous Manipulator
SPEC	Specialist
SRAM	Static RAM
SRB	Solid Rocket Booster
SRMS	Shuttle Remote Manipulator System
SSAS	Segment-to-Segment Attach System
SSC	Station Support Computer
SSCB	Space Station Control Board
SSE	Small Fine Arm Storage Equipment
SSIPC	Space Station Integration and Promotion Center
SSME	Space Shuttle Main Engine
SSOR	Space-to-Space Orbiter Radio
SSP	Standard Switch Panel
SSPTS	Station-to-Shuttle Power Transfer System
SSRMS	Space Station Remote Manipulator System
STC	Small Fire Arm Transportation Container
STEM	Science, Technology, Engineering and Mathematics
STL	Space Tissue Lost
STORRM	Sensor Test for Orion Relative Navigation Risk Mitigation
STR	Starboard Thermal Radiator
STS	Space Transfer System
STVC	SFA Television Camera
SVS	Space Vision System
SWAB	Surface, Water, and Air Biocharacterization
TA	Thruster Assist
TAC	TCS Assembly Controller
TAC-M	TCS Assembly Controller – M
TCA	Thermal Control System Assembly
TCB	Total Capture Box
TCCS	Trace Contaminant Control System

TCCV	Temperature Control and Check Valve
TCS	Trajectory Control Sensor
	Thermal Control System
TCV	Temperature Control Valve
TDK	Transportation Device Kit
TDRS	Tracking and Data Relay Satellite
THA	Tool Holder Assembly
THC	Temperature and Humidity Control
	Translational Hand Controller
THCU	Temperature and Humidity Control Unit
TIU	Thermal Interface Unit
TKSC	Tsukuba Space Center (Japan)
TLM	Telemetry
TMA	Russian vehicle designation
TMR	Triple Modular Redundancy
TPL	Transfer Priority List
TRRJ	Thermal Radiator Rotary Joint
TUS	Trailing Umbilical System
TVC	Television Camera
UCCAS	Unpressurized Cargo Carrier Attach System
UCM	Umbilical Connect Mechanism
UCM-E	UCM – Exposed Section Half
UCM-P	UCM – Payload Half
UHF	Ultrahigh Frequency
UIL	User Interface Language
ULC	Unpressurized Logistics Carrier
ULF	Utilization Logistics Flight
UMA	Umbilical Mating Adapter
UOP	Utility Outlet Panel
UPC	Up Converter
USA	United Space Alliance
US LAB	United States Laboratory
USOS	United States On-Orbit Segment
UTA	Utility Transfer Assembly
VAJ	Vacuum Access Jumper
VBSP	Video Baseband Signal Processor
VCAM	Vehicle Cabin Atmosphere Monitor
VCU	Video Control Unit
VDS	Video Distribution System
VLU	Video Light Unit

V02maX	Evaluation of Maximal Oxygen Uptake and Submaximal Estimates of V02max Before, During, and After Long Duration International Space Station Missions
VNS	Vision Navigation Sensor
VPU	Vegetable Production Unit
VRA	Vent Relief Assembly
VRCS	Vernier Reaction Control System
VRCV	Vent Relief Control Valve
VRIV	Vent Relief Isolation Valve
VSU	Video Switcher Unit
VSW	Video Switcher
WAICO	Waiving and Coiling
WCL	Water Cooling Loop
WETA	Wireless Video System External Transceiver Assembly
WIF	Work Interface
WORF	Window Observational Research Facility
WRM	Water Recovery and Management
WRS	Water Recovery System
WS	Water Separator
	Work Site
	Work Station
WVA	Water Vent Assembly
Z1	Zenith One
ZSR	Zero-g Stowage Rack

This page intentionally blank

MEDIA ASSISTANCE

NASA TELEVISION TRANSMISSION

NASA Television is carried on an MPEG-2 digital signal accessed via satellite AMC-6, at 72 degrees west longitude, transponder 17C, 4040 MHz, vertical polarization. For those in Alaska or Hawaii, NASA Television will be seen on AMC-7, at 137 degrees west longitude, transponder 18C, at 4060 MHz, horizontal polarization. In both instances, a Digital Video Broadcast, or DVB-compliant Integrated Receiver Decoder, or IRD, with modulation of QPSK/DBV, data rate of 36.86 and FEC 3/4 will be needed for reception. The NASA Television schedule and links to streaming video are available at:

http://www.nasa.gov/ntv

NASA TV's digital conversion will require members of the broadcast media to upgrade with an "addressable" Integrated Receiver De-coder, or IRD, to participate in live news events and interviews, media briefings and receive NASA's Video File news feeds on a dedicated Media Services channel. NASA mission coverage will air on a digital NASA Public Services "Free to Air" channel, for which only a basic IRD will be needed.

Television Schedule

A schedule of key in-orbit events and media briefings during the mission will be detailed in a NASA TV schedule posted at the link above. The schedule will be updated as necessary and will also be available at:

http://www.nasa.gov/multimedia/nasatv/mission_schedule.html

Status Reports

Status reports on launch countdown and mission progress, in-orbit activities and landing operations will be posted at:

http://www.nasa.gov/shuttle

This site also contains information on the crew and will be updated regularly with photos and video clips throughout the flight.

More Internet Information

Information on the ISS is available at:

http://www.nasa.gov/station

Information on safety enhancements made since the Columbia accident is available at:

http://www.nasa.gov/returntoflight/system/index.html

Information on other current NASA activities is available at:

http://www.nasa.gov

Resources for educators can be found at the following address:

http://education.nasa.gov

This page intentionally blank

PUBLIC AFFAIRS CONTACTS

NASA HEADQUARTERS
WASHINGTON, DC

John Yembrick
International Partners & Shuttle,
Space Station Policy
202-358-1100
john.yembrick-1@nasa.gov

Michael Curie
Shuttle, Space Station Policy
202-358-1100
michael.curie@nasa.gov

Stephanie Schierholz
Shuttle, Space Station Policy
202-358-1100
stephanie.schierholz@nasa.gov

Joshua Buck
Shuttle, Space Station Policy
202-358-1100
jbuck@nasa.gov

Michael Braukus
Research in Space
202-358-1979
michael.j.braukus@nasa.gov

Ashley Edwards
Research in Space
202-358-1756
ashley.edwards-1@nasa.gov

JOHNSON SPACE CENTER
HOUSTON, TEXAS

James Hartsfield
News Chief
281-483-5111
james.a.hartsfield@nasa.gov

Kyle Herring
Public Affairs Specialist
Space Shuttle Program Office
281-483-5111
kyle.j.herring@nasa.gov

Rob Navias
Program and Mission Operations Lead
281-483-5111
rob.navias-1@nasa.gov

Kelly Humphries
Public Affairs Specialist
International Space Station and Mission
Operations Directorate
281-483-5111
kelly.o.humphries@nasa.gov

Nicole Cloutier-Lemasters
Public Affairs Specialist
Astronauts
281-483-5111
nicole.cloutier-1@nasa.gov

KENNEDY SPACE CENTER
CAPE CANAVERAL, FLORIDA

Allard Beutel
News Chief
321-867-2468
allard.beutel@nasa.gov

Candrea Thomas
Public Affairs Specialist
Space Shuttle
321-867-2468
candrea.k.thomas@nasa.gov

Tracy Young
Public Affairs Specialist
International Space Station
321-867-2468
tracy.g.young@nasa.gov

MARSHALL SPACE FLIGHT CENTER
HUNTSVILLE, ALABAMA

Dom Amatore
Public Affairs Manager
256-544-0034
dominic.a.amatore@nasa.gov

June Malone
News Chief/Media Manager
256-544-0034
june.e.malone@nasa.gov

Steve Roy
Public Affairs Specialist
Space Shuttle Propulsion
256-544-0034
steven.e.roy@nasa.gov

STENNIS SPACE CENTER
BAY ST. LOUIS, MISSISSIPPI

Rebecca Strecker
News Chief
228-688-3249
rebecca.a.strecker@nasa.gov

Paul Foerman
Public Affairs Officer
228-688-1880
paul.foerman-1@nasa.gov

AMES RESEARCH CENTER
MOFFETT FIELD, CALIFORNIA

Mike Mewhinney
News Chief
650-604-3937
michael.s.mewhinney@nasa.gov

Rachel Prucey
Public Affairs Officer
650-604-0643
Rachel.L.Prucey@nasa.gov

Ruth Marlaire
Public Affairs Officer
650-604-4709
ruth.marlaire@nasa.gov

Cathy Weselby
Public Affairs Officer
650-604-2791
cathy.weselby@nasa.gov

Karen Hanner
Public Affairs Officer
650-604-4034
karen.c.hanner@nasa.gov

DRYDEN FLIGHT RESEARCH CENTER
EDWARDS, CALIFORNIA

Kevin Rohrer
Director, Public Affairs
661-276-3595
kevin.j.rohrer@nasa.gov

Alan Brown
News Chief
661-276-2665
alan.brown@nasa.gov

Leslie Williams
Public Affairs Specialist
661-276-3893
leslie.a.williams@nasa.gov

GLENN RESEARCH CENTER
CLEVELAND, OHIO

Lori Rachul
News Chief
216-433-8806
lori.j.rachul@nasa.gov

Sally Harrington
Public Affairs Specialist
216-433-2037
sally.v.harrington@nasa.gov

Katherine Martin
Public Affairs Specialist
216-433-2406
katherine.martin@nasa.gov

LANGLEY RESEARCH CENTER
HAMPTON, VIRGINIA

Marny Skora
Head, Office of Communications
757-864-6121
marny.skora@nasa.gov

Keith Henry
News Chief
757-864-6120
h.k.henry@nasa.gov

Kathy Barnstorff
Public Affairs Officer
757-864-9886
katherine.a.barnstorff@nasa.gov

Amy Johnson
Public Affairs Officer
757-864-7022
amy.johnson@nasa.gov

UNITED SPACE ALLIANCE

Jessica Pieczonka
Houston Operations
281-212-6252
832-205-0480
jessica.b.pieczonka@usa-spaceops.com

Tracy Yates
Florida Operations
321-861-3956
(c) 321-750-1739
tracy.e.yates@usa-spaceops.com

BOEING

Edmund G. Memi
Manager, Communications
The Boeing Co.
Space Exploration Division
281-226-4029
edmund.g.memi@boeing.com

Adam Morgan
Boeing
International Space Station
281-226-4030
adam.k.morgan@boeing.com

JAPAN AEROSPACE EXPLORATION AGENCY (JAXA)

Kumiko Sagara
JAXA Public Affairs Representative
Houston
281-792-7468
sagara.kumiko@jaxa.jp

JAXA Public Affairs Office
Tokyo, Japan
011-81-50-3362-4374
proffice@jaxa.jp

CANADIAN SPACE AGENCY (CSA)

Jean-Pierre Arseneault
Manager, Media Relations & Information Services
Canadian Space Agency
514-824-0560 (cell)
jean-pierre.arseneault@asc-csa.gc.ca

Media Relations Office
Canadian Space Agency
450-926-4370