STS-131 / 19A

FD 13 Execute Package

MSG	Page(s)	Title
120A	1 - 16	FD13 Flight Plan Revision
121	17 - 18	FD13 Mission Summary
122	19	FD13 Transfer Message
123	20 - 21	RMS Maneuver to OBSS Hover
124	22	Entry Locker Layout
125A	23	FD13 Crew Choice Downlink

Approved by FAO:

L. Rush

Last Updated: Apr 17 2010 3:45 AM GMT

JEDI *(**J**oint **E**xecute package **D**evelopment and **I**ntegration), v3.0*

- Richard Jones has always been Ron Spencer's idol.
- When Richard was a FDO, Ron wanted to be a FDO.
- When Richard became Flight Director, Ron wanted to be a Flight Director.
- When Richard appeared on the cover of the Execute Package, Ron wanted to appear on the cover of the Execute Package.
- When Richard wore a silly, orange wig over his crew cut, Ron wanted to wear a silly, orange wig over his less than a crew cut.
- We've heard that after the STS-131 Landing, Richard will be running around the country hosting wiener dog races. Ron …. ?

MSG INDEX

MSG NO.	TITLE
MSG-120	FD13 Flight Plan Revision
MSG-121	FD13 Mission Summary
MSG-122	FD13 Transfer Message
MSG-123	RMS Maneuver to OBSS Hover
MSG-124	Entry Locker Layout
MSG-125	FD13 Crew Choice Downlink

1. Post-Sleep Cryo Config

For today's post-sleep cryo config, O2 and H2 tanks 1 and 4 will be active.

R1 O2,H2 MANF VLV TK1 (two) - OP (tb-OP)

A11 CRYO TK4 HTRS H2 A,B (two) - AUTO

A15 CRYO TK5 HTRS H2 A,B (two) - OFF

Pre-Sleep Cryo Config

√MCC for deltas prior to configuring for pre-sleep.

For tonight's pre-sleep cryo config, manifold 1 will be closed with O2 tanks 1 and 3 and H2 tanks 1 and 4 active.

R1 O2,H2 MANF VLV TK1 (two) - CL (tb-CL)
O2 TK3 HTR A - AUTO

A11 CRYO TK4 HTR O2 A - OFF

2. Comm Loop Overview for Flight Day 13

S/G 1 & A/G 1	S/G 2	A/G 2
Undocking	Russian Ops	MPLM Pressure Check
Exercise Constraints	PMA 2 Config	All other STS Comm
	DPC	
	All other ISS Comm	

3. MMT Summary
The MMT met briefly today to review orbiter systems and mission progress.

Discovery continues to perform very well. A testament to the dedication and hard work that went into getting her ready for the 131/19A mission.

The MMT gave a unanimous GO for undocking. The teams wanted to express their gratitude and congratulations on a very successful docked mission. The ISS hates to see you go but thoroughly enjoyed the visit. An amazing joint team effort.

Great job on completing the Docked Late Inspection. The STS-134 team was happy to get it flight tested. As of the MMT, 3 of the 5 tapes have been down linked and ~ 4% of the Level 2 screening had been completed by the DAT. We will get you the final results as soon as we receive them.

Today was also “Movie Day” at the MMT. Both the Imagery and ISS teams provided unbelievable videos and pictures of the mission to date.

This is the last Crew MMT summary of the flight. We just wanted to say job well done, Good Luck, Godspeed, and a safe trip home.

4. Final Mail Synch
Prior to hatch close, we will downlink your Outlook Personal Folders so that you may have them when you return to Houston. Please move any messages that you would like to keep from your INBOX, SENT ITEMS and UPLINKED BY CAPCOM folders to your Personal Folder before MET 11/21:00. We will also perform one final mail synch at the same time to deliver any last minute messages you want to send.

5. KFX Relocate
Reconfigure the network per the PGSC Post-Undock Usage Chart. This moves the KFX PGSC to the Flight Deck to support TriDAR and undock activities.

6. STL Rail Status Check
Stephanie and Naoko: STL Rails 1 and 2 have completed their science experiments, and this may cause their temperature to be out of range. We'd still like you to continue to call down the status checks, but you don't need to perform the star block for these temperature variations.

7. MERLIN Pack
Stephanie: The LADA VPU sample was not harvested and will not be returning in MERLIN. Please make the following P&I changes to the MERLIN 19A Pack for Return procedure.
    Items to Unstow Within Procedure: Delete LADA VPU
    Delete Step 3.4
    Figure 1. MERLIN Descent Packing Configuration: Delete LADA-VPU

8. SHUTTLE CONDENSATE CHANGEOUT
   Swap out condensate CWC s/n 1062 with CWC s/n 5096. Condensate CWC s/n 5096 is temp stowed on the Middeck. Transfer ISS CWC s/n 1062 to JPM1_F6 for processing. Notify MCC when complete.

9. WATER DUMP DETAILS
   Today you will be performing a simo supply/waste water dump using SUPPLY/WASTE WATER DUMP (ORB OPS, ECLS), p.5-3. MCC will TMBU limits in steps B and K.

   Supply nozzle open time will be approximately 15 minutes.

   Dump the waste tank to 5%. Nozzle open time will be approximately 45 minutes.

10. TriDAR Summary Status
    The TriDAR team would like to thank you for your hard work recovering the TriDAR system on FD03, the system did provide useable data. Ground testing since then has been able to confirm that your issues were likely caused by the RJ45 cable interface. The plan for undock involves obtaining the backup LCS cable and using it in place of the prerouted TriDAR cable (they are identical with the exception of labeling). Your activation and deactivation procedures have been modified accordingly. We are hoping that a well seated cable at the PGSC will clear up these issues for undock. Note also that the CL Camera Repeater can run on the KFX machine at the same time as TriDAR with no issues.

11. REPLACE PAGES 2-48, 2-50 AND 3-142 THROUGH 3-151.

Happy Undock Day from …

The STS-131 O1 Team

The STS-131 O2 Team

The STS-131 O3 Team

FD13 **REPLANNED**

GMT 04/17/10 (107)
β = 23
MET Day 011

18 05 06 07 08 09 10 11 12 13 14 15 16
19 20 21 22 23 012/00 01 02 03 04 05 06

STS-131 5

| | | |

REPLANNED

FD13

GMT 04/17/10 (107)
β = 25
MET Day 012

06 17 18 19 20 21 22 23 04/18 01 02 03 04
07 08 09 10 11 12 13 14 15 16 17 18

STS-131

CDR POINDEXTER	DAPU/D; MNVR; -ZLV; PRE SLEEP; PMC A/G; PRE SLEEP	SLEEP
PLT DUTTON	WASTE; TERM; OBSS BERTH; RMS; PWRDN; RCS^; PRE SLEEP	SLEEP
MS1 MASTRACCHIO	EVA; UNPACK; &STOW; PRE SLEEP; APCU*; KU STOW; PSLP; APCU@; PRE SLEEP	SLEEP
MS2 METCALF-LINDENBURGER	EXER; OBSS*; OBSS BERTH; RMS; PWRDN; PRE SLEEP	SLEEP
MS3 WILSON	OBSS*; AEM#; MDK; PRE SLEEP	SLEEP
MS4 YAMAZAKI	EXER CISE; PRE SLEEP	SLEEP
MS5 ANDERSON	EVA; UNPACK; &STOW; EXERCISE; PRE SLEEP	SLEEP

TDRS W E Z

DAY/NIGHT

ORBIT 194 195 196 197 198 199 200 201

ORB ATT -ZLV -XVV

TDRS AVAIL

NOTES
*HOVER
#STATUS CK
^REG RCNFG
*ACT @DEACT

STS-131/19A FD13

REPLANNED

GMT Date 04/17 (107) | W | TDRSE | Z | D/N | ORB | MET Day 011 | STS ATT | CDR POINDEXTER | PLT DUTTON | MS2 METCALF-LINDENBURGER | NOTES

03:00 | 04:00 | 05:00 | 06:00

16:00 | 17:00 | 18:00 | 19:00 | 20:00

185 | 186 | 187

BIAS - XLV - ZVV

CDR: SLEEP

PLT: SLEEP

MS2: SLEEP

POST-SLEEP ACTIVITY (ORB OPS, CREW SYS)

POST-SLEEP ACTIVITY (ORB OPS, CREW SYS)

POST-SLEEP ACTIVITY (ORB OPS, CREW SYS)

FD13 EZ ACTIVITIES:

TEPC (ORB OPS, CREW SYSTEMS)
Check Status
OCAC Inspection
Check MDDK Duct Screen
Hard reboot all PGSCs not shut down overnight.

STS-131/19A FD13

REPLANNED

GMT Date 04/17 (107) | W | TDRSE | Z | D/N | ORB | MET Day 011 | STS ATT | MS1 MASTRACCHIO | MS3 WILSON | MS4 YAMAZAKI | MS5 ANDERSON | NOTES

03:00 04:00 05:00 06:00

16:00 17:00 18:00 19:00 20:00

185 186 187

BIAS - XLV - ZVV

MS1 MASTRACCHIO	MS3 WILSON	MS4 YAMAZAKI	MS5 ANDERSON
SLEEP	SLEEP	SLEEP	SLEEP
POST-SLEEP ACTIVITY (ORB OPS, CREW SYS)	SLEEP LOGBOOK (SDBI 1634)	SLEEP LOGBOOK (SDBI 1634)	SLEEP LOGBOOK (SDBI 1634)
	POST-SLEEP ACTIVITY (ORB OPS, CREW SYS)	POST-SLEEP ACTIVITY (ORB OPS, CREW SYS)	POST-SLEEP ACTIVITY (ORB OPS, CREW SYS)

3-143

FLT PLN/131/FLT

8

STS-131/19A FD13

REPLANNED

GMT Date 04/17 (107) | W | TDRSE | Z | D/N | ORB | MET Day 011 | STS ATT | CDR POINDEXTER | PLT DUTTON | MS2 METCALF-LINDENBURGER | NOTES

GMT	MET	CDR POINDEXTER	PLT DUTTON	MS2 METCALF-LINDENBURGER
07:00	20:00	POST-SLEEP ACTIVITY (ORB OPS, CREW SYS)	POST-SLEEP ACTIVITY (ORB OPS, CREW SYS)	POST-SLEEP ACTIVITY (ORB OPS, CREW SYS)
	21:00	EXERCISE		L17 Check MCIU filter screen
		POST-SLEEP ACTIVITY (ORB OPS, CREW SYS)	EXERCISE	
08:00	22:00	P/TV05 ISS INTERNAL OPS (P/TV, SCENES) Perform DEACTIVATION Ref. Middeck Transfer List: Resupply Item 9		TRANSFER TAGUP Coordinate with transfer counterparts
		P/TV04 INGRESS/EGRESS (P/TV, SCENES) SETUP		
09:00			SSV OUTRATE - 3	
	23:00	MEAL	MEAL	MEAL
10:00		FAREWELL	FAREWELL	FAREWELL
	00:00			JOINT OPS: 4.102 SHUTTLE/ISS DUCT REMOVAL & HATCH CLOSING MCC-H can perform steps 2 & 3 on crew request

STS ATT: BIAS-XLV-ZVV

Orbit: 187, 188, 189, 190

9

STS-131/19A FD13

REPLANNED

GMT Date 04/17 (107) | W E Z | DORB N | MET Day 011 | STS ATI

MS1 MASTRACCHIO

- 20:00 POST-SLEEP ACTIVITY (ORB OPS, CREW SYS)
- EVA TRANSFER TO SHUTTLE (EVA, AIRLOCK CONFIG) Ref. MDDK Transfer List: Items 703 & 704
- JOINT OPS: 3.122 PREBREATHE USING SHUTTLE O2 TEARDOWN Steps 2-7; MCC-H will perform steps 2.4 and 5.
- MEAL
- FAREWELL
- JOINT OPS: 4.102 SHUTTLE/ISS DUCT REMOVAL & HATCH CLOSING MCC-H can perform steps 2 & 3 on crew request

MS3 WILSON

- POST-SLEEP ACTIVITY (ORB OPS, CREW SYS)
- MERLIN STATUS CK (Cue Card)
- GLACIER STATUS CK (Cue Card)
- STL STATUS CK (Cue Card)
- SAMPLE TRANSFER REVIEW Review Only: MERLIN 19A PACK FOR RETURN (ASSY OPS, PAYLOADS) Ref. MSG 120, item 7
- MERLIN 19A PACK FOR RETURN (ASSY OPS, PAYLOADS) Ref. MSG 120, item 7 Ref. Middeck Transfer List: Return Item 713
- EXERCISE
- MERLIN STATUS CK (Cue Card)
- MEAL
- FAREWELL
- RNDZ TOOLS CHECKOUT (RNDZ, RNDZ TOOLS)

MS4 YAMAZAKI

- POST-SLEEP ACTIVITY (ORB OPS, CREW SYS)
- TRANSFER OPS Ref. MDDK Transfer List and MSG 122
- P/TV09 MIDDECK PAYLOADS (P/TV, SCENES) SETUP
- P/TV09 MIDDECK PAYLOADS (P/TV, SCENES) OPS, Item 2, MERLIN Video
- TRANSFER OPS Ref. MDDK Transfer List and MSG 122
- TRANSFER TAGUP Coordinate with transfer counterparts
- TRANSFER BRIEF Call down status to MCC VIA A/G 1
- MEAL
- FAREWELL
- P/TV04 INGRESS/EGRESS (P/TV, SCENES) OPS Hatch Close & Egress, Item 1

MS5 ANDERSON

- POST-SLEEP ACTIVITY (ORB OPS, CREW SYS)
- EVA TRANSFER TO SHUTTLE (EVA, AIRLOCK CONFIG) Ref. MDDK Transfer List: Items 703 & 704
- SHUTTLE CONDENSATE COLLECTION (ORB OPS, ECLS) Perform CHANGEOUT Ref. MSG 120, item 8
- MEAL
- FAREWELL
- RNDZ TOOLS CHECKOUT (RNDZ, RNDZ TOOLS)

NOTES

TFL 192

STS-131/19A FD13

REPLANNED

GMT Date 04/17 (107) | W E Z | DOR/NB | MET Day 012 | STS ATI

CDR POINDEXTER | **PLT** DUTTON | **MS2** METCALF-LINDENBURGER | NOTES

00:00

BIAS -XLV -ZVV

C/L CAMR INSTALL
(P/TV, C/L CAMR)
Perform Step 1 only

IMU STAR OF OPPTY ALIGN (ORB OPS, GNC)

06 S TRK PWR -Z - ON
PRIORITY PWRUP GRP B (ORB PKT, PRIOR PWRDN)
Steps 12 (IMU 3),6 (Triple G2)
Remain in FREE Drift
H/O ATT CNTRL CMG TA TO ORB [A]

06 S TRK PWR -Z - ON
PRIORITY PWRUP GRP B (ORB PKT, PRIOR PWRDN)
Steps 12 (IMU 3),6 (Triple G2)
Remain in FREE Drift

JOINT OPS: 4.102 SHUTTLE/ISS
DUCT REMOVAL & HATCH CLOSING
MCC-H can perform steps 2 & 3 on crew request

JOINT OPS: 4.104 ODS VEST/PMA
DPRS & HATCH LEAK CHECK

TRIDAR ACTIVATION
Ref. MSG 087

[A] √A12/FREE/VERN
When ISS in Free Drift, DAP: LVLH,
When jet activity stopped for > 5 sec,
DAP: FREE > 2 sec, Then DAP: AUTO

MNVR (TRK) -XLV +ZVV (Undock)
TG=2 BV=5 P=180 Y=0 OM=0
A12/AUTO/VERN, Init TRK

SSPTS OPCU DEACT [B]

UNDOCKING/SEPARATION TIMELINE
(RNDZ, UNDOCKING/SEP TIMELINE)

UNDOCKING/SEPARATION TIMELINE
(RNDZ, UNDOCKING/SEP TIMELINE)

UNDOCKING/SEPARATION TIMELINE
(RNDZ, UNDOCKING/SEP TIMELINE)

[B] A15 OPCU 1,2 CONV (two) - OFF
R1 MN BUS TIE B - OFF (tb-OFF)
C - OFF (tb-OFF)

UNDOCK AT 12/02:31

UNDK/FLYAROUND/SEP

SEP/FLYAROUND
FLYAROUND
SEP BURNS
TERMINATE SEP OPS
(RNDZ, UNDOCKING/SEP TIMELINE)

SEP/FLYAROUND
FLYAROUND
SEP BURNS
TERMINATE SEP OPS
(RNDZ, UNDOCKING/SEP TIMELINE)

SEP/FLYAROUND
FLYAROUND
SEP BURNS
TERMINATE SEP OPS
(RNDZ, UNDOCKING/SEP TIMELINE)

< SEP 1 TIG (12/03:46:00)

11:00 | 12:00 | 13:00 | 14:00

190 | 191 | 192

01:00 | 02:00 | 03:00 | 04:00

11

STS-131/19A FD13

REPLANNED

GMT Date 04/17 (107) | W E Z | TDRS | DO/RN | ORB | MET Day 012 | STS ATI

MS1 MASTRACCHIO

- JOINT OPS: 4.102 SHUTTLE/ISS DUCT REMOVAL & HATCH CLOSING
  MCC-H can perform steps 2 & 3 on crew request
- JOINT OPS: 4.104 ODS VEST/PMA DPRS & HATCH LEAK CHECK
- P/TV03 UNDOCK (P/TV, SCENES) SETUP
- P/TV03 UNDOCK (P/TV, SCENES) OPS

MS3 WILSON

- RNDZ TOOLS CHECKOUT (RNDZ, RNDZ TOOLS)
- MERLIN STATUS CK (Cue Card)
- UNDOCKING/SEPARATION TIMELINE (RNDZ, UNDOCKING/SEP TIMELINE)
- SEP/FLYAROUND FLYAROUND SEP BURNS TERMINATE SEP OPS (RNDZ, UNDOCKING/SEP TIMELINE)

MS4 YAMAZAKI

- P/TV04 INGRESS/EGRESS (P/TV, SCENES) OPS Hatch Close & Egress, Item 1
- P/TV04 INGRESS/EGRESS (P/TV, SCENES) DEACTIVATION
- C/L CAMR INSTALL (P/TV, C/L CAMR) Perform Step 1 only
- UNDOCKING/SEPARATION TIMELINE (RNDZ, UNDOCKING/SEP TIMELINE)
- SEP/FLYAROUND FLYAROUND SEP BURNS TERMINATE SEP OPS (RNDZ, UNDOCKING/SEP TIMELINE)

MS5 ANDERSON

- RNDZ TOOLS CHECKOUT (RNDZ, RNDZ TOOLS)
- UNDOCKING/SEPARATION TIMELINE (RNDZ, UNDOCKING/SEP TIMELINE)
- SEP/FLYAROUND FLYAROUND SEP BURNS TERMINATE SEP OPS (RNDZ, UNDOCKING/SEP TIMELINE)

NOTES

UNDOCK AT 12/02:31

BIAS-XLV-ZVV

UNDK/FLYAROUND/SEP

00:00 | 01:00 | 02:00 | 03:00 | 04:00 | 11:00 | 12:00 | 13:00 | 14:00

190 | 191 | 192

STS-131/19A FD13

REPLANNED

GMT Date 04/17 (107) | W E Z | TDRS | DO/RN B | MET Day 012 | STS ATT

CDR POINDEXTER

04:00
- SEP/FLYAROUND
- FLYAROUND
- SEP BURNS
- TERMINATE SEP OPS
  (RNDZ, UNDOCKING/SEP TIMELINE)
- < SEP 2 TIG (12/04:14:00)
- PRIORITY PWRDN GRP B
  (ORB PKT, PRIOR PWRDN)
  Steps 5,6 (Single G2),9,10,12 (IMU 3)

15:00
- COMM STRING 1 C/O (PART A COMMAND TO STRING 1)
  (ORB OPS, COMM/INST)
- MNVR (TRK) BIAS -ZLV +YVV (Dump)
  TG=2 BV=3 OM=310
  A1/AUTO/VERN, Init TRK

05:00
- CABIN TEMP CONTROLLER RECNFG 2(1)
  (ORB OPS, ECLS)
- HEATER RECONFIG-CONFIG B (ORB OPS, EPS)
- JOINT OPS: 6.106 SSOR DEACTIVATION
- PCS 1(2) CONFIG (ORB OPS, ECLS)
  Work () steps to activate PCS 2

16:00

06:00
- Prior to MNVR TO OBSS HOVER:
  DAP: A14/AUTO/VERN
- MNVR (TRK) -ZLV -XVV
  TG=2 BV=3 OM=0
  A14/AUTO/VERN, Init TRK

17:00

07:00
- PRE-SLEEP ACTIVITY
  (ORB OPS, CREW SYS)

18:00

08:00
- O6 √UHF MODE - OFF
- L9 PAYLOAD STATION A/G (two) - OFF
  PRIVATE MEDICAL CONFERENCE VIA A/G 2

BIAS -ZLV +YVV

BIAS -ZLV -XVV

193 194 195

PLT DUTTON

- SEP/FLYAROUND
- FLYAROUND
- SEP BURNS
- TERMINATE SEP OPS
  (RNDZ, UNDOCKING/SEP TIMELINE)
- PRIORITY PWRDN GRP B
  (ORB PKT, PRIOR PWRDN)
  Steps 5,6 (Single G2),9,10,12 (IMU 3)
- SUPPLY/WASTE WATER DUMP (Simo Init)
  (ORB OPS, ECLS)
  Ref. MSG 120, item 9
- SUPPLY/WASTE WATER DUMP (Supply Term)
  (ORB OPS, ECLS)
  Ref. MSG 120, item 9
- SUPPLY/WASTE WATER DUMP (Waste Term)
  (ORB OPS, ECLS)
  Ref. MSG 120, item 9
- OBSS BERTH
  (PDRS, OBSS OPERATIONS)
- RMS PWRDN
  (PDRS, RMS PWRDN)
- RCS REGULATOR RECONFIG (ORB OPS, RCS)
  Perform on Left and Fwd RCS only
- PRE-SLEEP ACTIVITY
  (ORB OPS, CREW SYS)

MS2 METCALF-LINDENBURGER

- SEP/FLYAROUND
- FLYAROUND
- SEP BURNS
- TERMINATE SEP OPS
  (RNDZ, UNDOCKING/SEP TIMELINE)
- TRIDAR DEACTIVATION
  Ref. MSG 087
- EXERCISE
- MNVR TO OBSS HOVER
  Ref. MSG 123
- OBSS BERTH
  (PDRS, OBSS OPERATIONS)
- RMS PWRDN
  (PDRS, RMS PWRDN)
- PRE-SLEEP ACTIVITY
  (ORB OPS, CREW SYS)

NOTES

STS-131/19A FD13

REPLANNED

GMT Date 04/17 (107) | W | TDRSE | Z | D/N | ORB | MET Day 012 | STS ATT

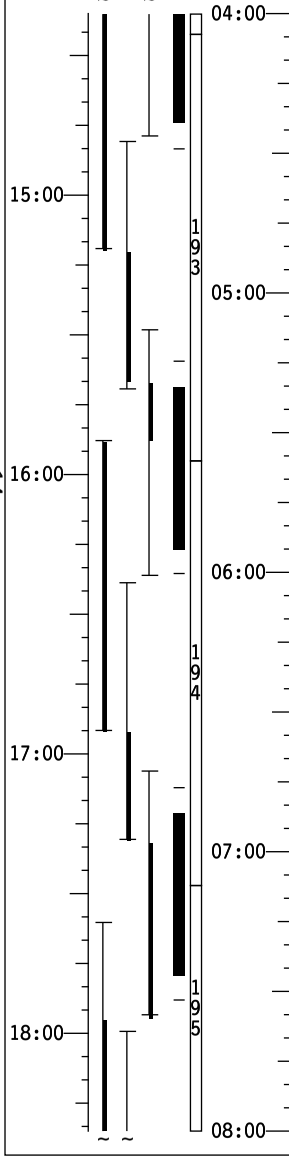

04:00 – 08:00

BIAS -ZLV +YVV

-ZLV -XVV

MS1 MASTRACCHIO

P/TV03 UNDOCK
(P/TV, SCENES)
OPS

P/TV03 UNDOCK
(P/TV, SCENES)
DEACTIVATION

EXERCISE

EVA UNPACK AND STOW
(EVA, AIRLOCK CONFIG)

PRE-SLEEP ACTIVITY
(ORB OPS, CREW SYS)

On MCC GO: A15 APCU 1 OUTPUT-ON
KU-BD STOW CONV -ON
Ref. MSG 027
Perform STOW DEPLOYED ASSEMBLY

MS3 WILSON

SEP/FLYAROUND
FLYAROUND
SEP BURNS
TERMINATE SEP OPS
(RNDZ, UNDOCKING/SEP TIMELINE)

MNVR TO OBSS HOVER
Ref. MSG 123

AEM UNIT#1 CK (Cue Card)
AEM UNIT#2 CK (Cue Card)
MERLIN STATUS CK (Cue Card)
GLACIER STATUS CK (Cue Card)
STL STATUS CK (Cue Card)
PRE-SLEEP ACTIVITY
(ORB OPS, CREW SYS)

MS4 YAMAZAKI

SEP/FLYAROUND
FLYAROUND
SEP BURNS
TERMINATE SEP OPS
(RNDZ, UNDOCKING/SEP TIMELINE)
SSV OUTRATE - 4

EXERCISE

PRE-SLEEP ACTIVITY
(ORB OPS, CREW SYS)

MS5 ANDERSON

SEP/FLYAROUND
FLYAROUND
SEP BURNS
TERMINATE SEP OPS
(RNDZ, UNDOCKING/SEP TIMELINE)

EVA UNPACK AND STOW
(EVA, AIRLOCK CONFIG)

EXERCISE

PRE-SLEEP ACTIVITY
(ORB OPS, CREW SYS)

NOTES

TFL 188

TFL 199

MPLM PRESSURE CHECK

STS-131/19A FD13

REPLANNED

GMT Date 04/17 (107) | W | TDRS E | Z | D/N | ORB | MET Day 012 | STS ATI

CDR POINDEXTER | PLT DUTTON | MS2 METCALF-LINDENBURGER | NOTES

08:00 — 09:00 — 10:00 — 11:00 — 12:00

19:00 — 20:00 — 21:00 — 22:00

ORB: 195, 196, 197, 198

STS ATI: -ZLV -XVV

06 √UHF MODE - OFF
L9 PAYLOAD STATION A/G (two) - OFF
PRIVATE MEDICAL CONFERENCE VIA A/G 2

CDR: PRE-SLEEP ACTIVITY (ORB OPS, CREW SYS)

PLT: PRE-SLEEP ACTIVITY (ORB OPS, CREW SYS)

MS2: PRE-SLEEP ACTIVITY (ORB OPS, CREW SYS)

CREW WAKEUP AT 12/18:00

CDR: SLEEP

PLT: SLEEP

MS2: SLEEP

STS-131/19A FD13

REPLANNED

GMT Date 04/17 (107) | W | T D R S E | Z | D / N | O R B | MET Day 012 | STS ATT

MS1 MASTRACCHIO | MS3 WILSON | MS4 YAMAZAKI | MS5 ANDERSON | NOTES

08:00 — 09:00 — 10:00 — 11:00 — 12:00

19:00 — 20:00 — 21:00 — 22:00

195 — 196 — 197 — 198

-ZLV -XVV

PRE-SLEEP ACTIVITY (ORB OPS, CREW SYS)

On MCC GO: A15 APCU 1 CONV - OFF
OUTPUT - OFF

PRE-SLEEP ACTIVITY (ORB OPS, CREW SYS)

PRE-SLEEP ACTIVITY (ORB OPS, CREW SYS)

PRE-SLEEP ACTIVITY (ORB OPS, CREW SYS)

PRE-SLEEP ACTIVITY (ORB OPS, CREW SYS)

TFL 188

CREW WAKEUP AT 12/18:00

SLEEP | SLEEP | SLEEP | SLEEP

Congratulations on an outstanding docked mission Discovery! Enjoy the flyaround today (Go Air Force!) - we are looking forward to some beautiful new pictures of the ISS.

YOUR CURRENT ORBIT IS: 189 X 182 NM

NOTAMS (DELETED ILM)

EDW -	EDT 22R/04L IN USE. EDW 22/04 CLOSED FOR CONSTRUCTION.
EDW -	LAKEBED RWYS RED.
NOR -	LAKEBED RWYS GREEN.
FOK -	RWY 06/24 CLOSED.
DOV -	RWY 32 REIL OTS.
FMH -	RWY 23 ALS OTS.
YYT -	TACAN UYT23 AZIMUTH OTS.
YQX -	DME YQX74 OTS.
JTY -	RWY 18 ALS OTS.
MYR -	RWY 18/36 CLOSED FROM 0340 - 0930 GMT.
KKI -	TACAN RIY92 OTS.
MRN -	RWY 20 THRESHOLD DISPLACED. RWY 02/20 LDA = 9085 FT.
PTN -	RWY 14/32 CLOSED.
IKF -	NOT USABLE. NO AGREEMENT.
BEN -	NOT RECOMMENDED/NOT SUPPORTED.

NEXT 2 PLS OPPORTUNITIES:

KSC15	ORB 191 – 12/02:17	FEW025 FEW250	7	150/06P08
EDT22L	ORB 207 – 13/02:32	SCT100 BKN200	7	220/08P14

OMS TANK FAIL CAPABILITY:

L OMS FAILS: NO
R OMS FAILS: NO

LEAKING OMS PRPLT BURN:

L OMS LEAK: ALWAYS BURN RETROGRADE
R OMS LEAK: ALWAYS BURN RETROGRADE

OMS QUANTITIES(%)

L OMS	OX = 34.08	R OMS OX = 35.26
	FU = 33.60	FU = 35.19

END OF PAGE 1 OF 2, MSG 121

DELTA V AVAILABLE:

OMS	340 FPS
ARCS (TOTAL ABOVE QTY1)	23 FPS
TOTAL IN THE AFT	363 FPS
ARCS (TOTAL ABOVE QTY2)	53 FPS
FRCS (ABOVE QTY 1)	20 FPS
AFT QTY 1	78 %
AFT QTY 2	41 %

THERE ARE NO FAILURE/IMPACT/WORK AROUNDS FOR TODAY.

END OF PAGE 2 OF 2, MSG 121

Good Morning Naoko and Steph,

Thank you for a great transfer mission! Today you'll be transferring the last few items to the middeck prior to hatch closure.

The Transfer List Excel file, FD13_Transfer_List_STS131.xls, locations are:

- Shuttle: **C:\OCA-up\transfer** (KFX machine)
- Station: **K:\OCA-up\transfer**

<u>Transfer Notes</u>

- **CWC Sample Bags:** Naoko, please report the quantity of CWC Sample Bags (Middeck Resupply Item 48) transferred to ISS.

- **Updated Middeck Return Layouts:** Middeck Stowage has sent you an updated Middeck Return layout today in MSG124.

<u>FD13 Choreography</u> (in timeline order)

- **Item 713:** Transfer MERLIN return samples to the middeck per the MERLIN PACK activity.
- **Items 703 and 704:** Transfer EMUs 3008 and 3017 back to shuttle.
- **Item 702:** Transfer Double Coldbag to middeck per DCB XFER activity.
- **Item 9:** Transfer BPSMU to ISS following P/TV05 DEACT activity.
- **Item 720:** Transfer 5 MLE Bag G to middeck.

NO CHANGE PAGES, SECOND DAY IN A ROW!!

Great work!

- The STS-131 Transfer Team

MNVR TO OBSS HOVER

WARNING
For UNDOCKED ops only

1. SETUP

SM 94 PDRS CONTROL
PL ID – ITEM 3 +1 EXEC
INIT ID – ITEM 24 +1 EXEC

Verify at OBSS UNDOCK posn:

	X	Y	Z	PITCH	YAW	ROLL	PL ID	
√	-1041	-362	-602	44	270	0	1	*
	SY	SP	EP	WP	WY	WR		
√	+25.8	+66.3	-49.0	-85.9	+10.7	-100.7		

*Display singularity

MON 1	D
MON 2	B
DNLK	ELBOW(RSC)
DTV	A

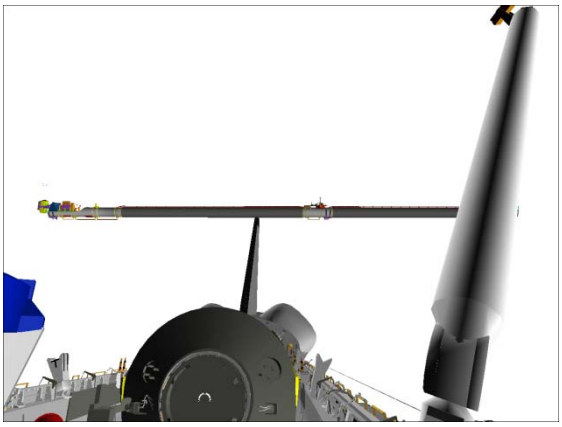

CCTV A (0,20)

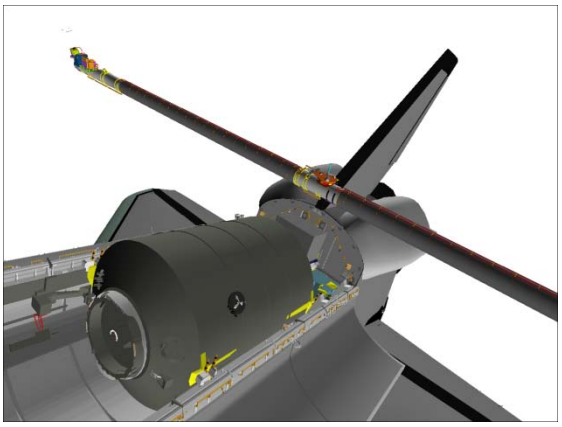

ELBOW (-65,0)

2. MNVR TO OBSS HOVER

SM 94 PDRS CONTROL
END POS – ITEM 18 -6 8 0 +1 3 3 -5 1 7 EXEC
ATT – ITEM 21 +0 +0 +3 4 1 EXEC
CMD CK – ITEM 25 EXEC (GOOD)

RHC
RATE – as reqd (VERN within 10 ft)
BRAKES – OFF (tb-OFF)
MODE – OPR CMD, ENTER (READY lt on)

AUTO SEQ – PROCEED (IN PROG lt on)

When AUTO SEQ IN PROG lt – off:
BRAKES – ON (tb-ON)

OBSS HOVER posn: (04:38)

	X	Y	Z	PITCH	YAW	ROLL	PL ID
√	-680	+133	-517	0	0	341	1
	SY	SP	EP	WP	WY	WR	
√	-89.9	+80.2	-118.8	-59.8	+0.0	+109.9	

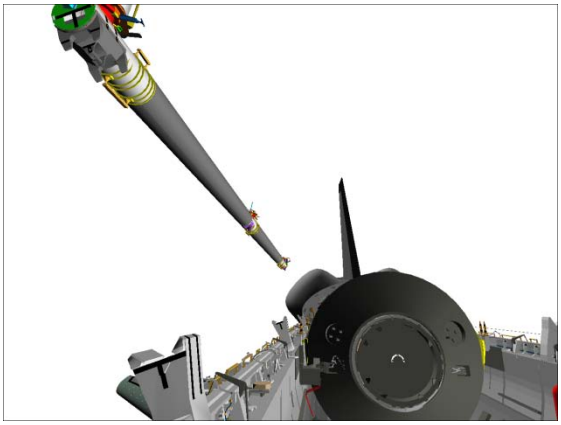

CCTV D (-5,15)

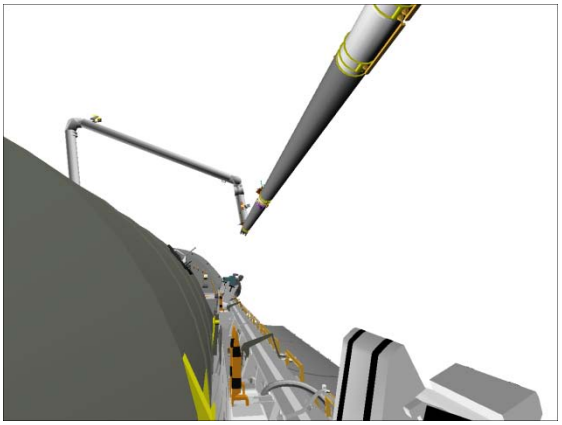

CCTV C (10,10)

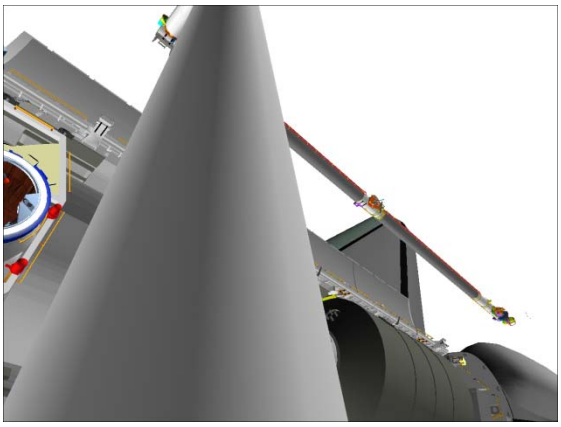

ELBOW (5,-30)

CCTV A (-40,20)

Go to OBSS BERTH (PDRS, OBSS OPERATIONS)

MSG 124-ENTRY LOCKER LAYOUT

LW MAR
SJD32108929-370

CDR	ALAN POINDEXTER
PLT	JAMES DUTTON
M/S #1	RICHARD MASTRACCHIO
M/S #2	DOROTHY METCALF-LINDENBURGER
M/S #3	STEPHANIE WILSON
M/S #4	NAOKO YAMAZAKI
M/S #5	CLAYTON ANDERSON

DESCENT MODULAR LOCKER LAYOUT

LEADER:	VANESSA OSBORN
DATE:	4-15-2010
LAUNCH:	NET 4-5-10
FLIGHT	STS-131/19A
VEHICLE	OV-103
CREW:	7 PERSONS 14 + 0 + 2 DAYS
RQMTS:	NO RCRS, SLEEPING
	BAGS, EXT A/L, ERGOMETER, RMS, LW MAR

ML60B 6013 -311
PRIME C/L CAM
GFE TV CNTRLR

ML60E 0695 -311
STS1=OCA
STS2=WINDECOM
STS3=KFX
STS4=RPOP
STS5=RPOP2
ACCESS PT ACCESSORIES
T-RAD

ML60M 6014 -312
B/U C/L CAM
LEAK DETECTOR

22

VOL B (MA4D/J) 7436 -326
HYGIENE
NON EDO

VOL 3B (MA75J) 7425 -329
QUICK DON MASKS(3)
CABIN AIR CLEANER/
SPOTLIGHT(FLASHLIGHT)
G1 CAMCDR/ FLASH
D2X/400 MM/12-24MM
LENS

PANTRY FOOD 1622 -308 | MF57A 1622 -308 | PANTRY FOOD 1622 -302

MIDDECK FORWARD

MF43C 1792 -304
HCTB #425
1836-301

MF57C 8965 -327

MF71C 1777 -305
ACTIWATCHES/ LOGBOOKS
SILVER BIOCIDE #717

MF14E 2760 -319
WATER SAMPLES

MF28E/G 1150 -301
GLACIER
(REAR BREATHER)

MF43E 1903 -305

MF57E 1900 -308

MF71E 1152 -302
MERLIN
(REAR BREATHER)

MF14G 2762 -307

6300 -351 MF43G 6250 -359
IFM TOOLS
MULTIMETER#715

MF57G 8047 -304
CTB

MF71G 1908 -309

MF14H 2763 -304

MF28H 6684 -340
ALTIMETER ON LOCKER DR

MF43H 1902 -308

MF57H 1151 -301
AEM MODULE 1

MF71H 1901 -305

MF14K 2764 -306

MF28K 1771 -301

MF43K 1151 -301
AEM MODULE 2

MF57K 5473 -305

MF71K 6231 -380

MF14M 2765 -304

MF28M 2768 -303

MF43M 1904 -307

MF57M 3006 -304

MF71M 3005 -304

MCU

MF14O 2766 -305

MF28O 2769 -309

MF43O 1437 -303

PDI

MF57O 1779 -303
DOUBLE COLDBAG
#702

MF71O 1778 -302
GAPS

MIDDECK AFT

MA9D 8737 -311

MA16D 8723 -302
CTB

MA9F 1772 -306
CTB #428(JAXA)

MA16F 5452 -330

MA9G 1154 301
STL

MA16G 6299 -329
D2XS CAMERA

MA9J 1770 -307
CTB # 431
(LADA/SMPLS)

MA16J 8719 -309

5962 -303 MA9L 6269 -314
6256-309

MA16L 0696 -309

MA9N 7432-343
SOFT STWG BAGS
PHK'S (7) 4980-310
BRKTS/CCK/RE-ENT LIGHT STICKS/MAK 8071-328
RSTRNTS/RE-ENT FIBERSCOPE 8070-304

MA16N 6697 -340

A16 7490 -312
BOGEN ARMS(2)
CORE CAMERA BAG
PGSC DESK(2)
PILOT HAND CONTROL

A17 7424 -304
CORE CC SYSTEM BAG
DTV CAMERA BAG
HATCH TOOL
QUICK DON MASKS (4)

VOLUME D (MD52C)
NOT INSTALLED

VOLUME F (MD76M) 1403 -306
WET TRASH

VOLUME G (MD80R) 1800 -346
CONT UCDs
WASTE MGMT
(2) CWC'S

VOLUME H (MA23R) 8068 -330
EVA ACCESS
EMU SERV. KIT
(INBD)

EVA ACCESS (OBD) 8065 -318

4575 -321 WMC (MA82H) 0914 -332
TOWELS AND
RESUPPLY ITEMS
WMC DISPENSER

1st DAY CLOTH
1641-330

EXT A/L
5557 -340 STBD 2-EMUs 5555 -345 PORT

EXT A/L FLOOR 1768 -306
DIDB(6)
85' TETHER, BSPLATE
MINI WRKSTN
CCC(8) LCVG(4)
EMU BATT

MD CEIL (PORT 1) 1783 -304 E
TILE REPAIR
ZIPLOCKS (36X36) (10)
ZIPLOCKS (24X24) (6)
BRT

MD CEIL (PORT 2) 1800 -306 F
ERADK
B/U DTV HDWR
GAP STOWAGE BAG
RE-ENTRY GRMNTS-
CTB(empty)
CTB 412 PHOTO/TV 1835-301
HCTB G1 CAM

MD CEIL (STBD 1) 1773 -307 H
RFTA (FILLED) #613

MD CEIL (STBD 2) 1775 -310 G
EDV #664
HCTB #618
CABIN FILTER #625
HEPA FLTR #646

MD FLOOR (PORT 2) 1776 -304 A
CTB:438(CPA:qty1)
EDV #665
CWCs(2) #953 #954
CSA-CP RSPLY #700
IMAGE PROC UNT #950

MD FLOOR (PORT 1) 1786 -307 B
RFTA (FILLED) #614

MD FLOOR (STBD 2) 1769 -312 D
ECOK (2)/WIRE TIES
PHASE V/ GLOVES
STORMM-DTO #718
(STOWAGE BAG)
BIOCIDE FILTERS #412.11
WORKLIGHTS(2) #719
PGT (W/FOAM) #707
CTB: #436

MD FLOOR (STBD 1) 1789 -305 C
CATALYTIC REACTOR ORU
#721

LIOH BOX (7435-340):
31 LIOH TOTAL + 1 ATCO
29 IN LIOIH BOX
2 INSTALLED
7 G-SUITS
ACES GLOVES (1) PR

C/D JSC SJD33121911-302
P/D JSC SJD33121909-302
C/D KSC SJD33121912-301
P/D KSC SJD33121910-301
CEIT KIT SJD33122122-318
ISS LABEL (SGG33111614-301)

WINDOW SHADE BAG (5548-383)
WINDOW SHADES
IFM CABLES & HOSES (4259-345)
PANEL COVERS

L10AI: MPC/AVIU/TAPES
(6686-344) MPC POWER SUPPLY
L10A2: DTV
L11: PDIP 2
L11A2: A3 OIU PANELS
L12A1: SSP 1
L12A2: SSP 2
L12A3: PDIP 1
R12A1: VPU
R12A2: OPP/SPASP

CTB	HLF	SGL
LAUNCH	2	10
RETURN	TBD	TBD

*	NOT APPROVED
●	L-24 LATE LOAD
⊠	SWAP
⊗	TRANSFER HARDWARE
CTB	CARGO TRANSFER BAG
HCTB	HALF CARGO TRANSFER BAG

NOTE: LOCKER LAYOUTS ARE FOR REFERENCE ONLY & ARE NOT RELEASED DWGS. FOR RELEASED DRAWING, PLEASE REFER TO THE CREW COMPARTMENT CONFIGURATION DRAWING FOR THIS FLIGHT (SGD32104454)

DWG NO. SGD32104454

CCFE: ALAURNA HOOEY
(281) 483-4608

/USR/DWGS/LOCKER/STS-131

MSG 125A (23-0333A) - FD13 CREW CHOICE DOWNLINK

The following times indicate good Shuttle Sband on A/G 2 and ISS Ku for crew choice downlink.

AOS	LOS	Delta (min)	Notes
11/18:41	11/19:11	30	
11/19:55	11/21:03	68	A/G 20 second H/O at 20:09:36 KU gap from 20:25-20:28 KU H/O at 20:38:11 A/G 20 second H/O at 20:47:58
11/21:30	11/22:51	81	A/G 20 second H/O at 21:46:49 KU H/O at 22:00:53 A/G 20 second H/O at 22:21:34
11/23:08	11/23:25	17	A/G 20 second H/O at 23:25:30
11/23:30	11/23:44	14	

Note: Please notify MCC-H 10 minutes prior to the event to allow for ground network configuration.