STS-131/19A

FD 05 Execute Package

MSG	Page(s)	Title
023A	1 - 14	FD05 Flight Plan Revision
024	15 - 16	FD05 Mission Summary
025	17 - 19	FD05 Transfer Message
026	20	FD04 MMT Summary
027A	21 - 22	KU-BAND STOW DELTAS
028	23 - 28	19A Return 5-MLE Bag Layouts

Approved by FAO:
L. Rush

Last Updated: Apr 8 2010 11:34 PM GMT
JEDI *(**J**oint **E**xecute package **D**evelopment and **I**ntegration), v3.0*

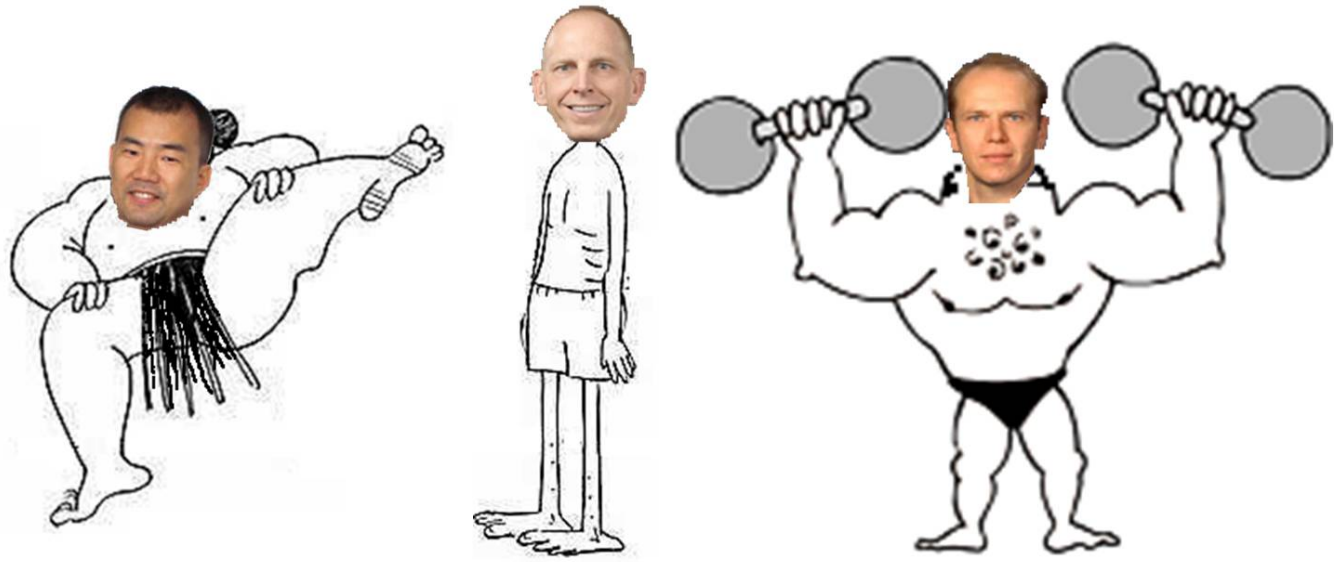

Clay's opinion of himself is deflated after "Sumo Soichi" and Oleg do his muscle work for him on Flight Day 4.

MSG INDEX

MSG NO.	TITLE
MSG023	FD05 Flight Plan Revision
MSG024	FD05 Mission Summary
MSG025	FD05 Transfer Message
MSG026	FD04 MMT Summary
MSG027	KU-BAND STOW DELTAS
MSG028	19A Return 5-MLE Bag Layouts

1. Post-Sleep Cryo Config

For today's post-sleep cryo config, O2 tanks 1, 3, and 4, and H2 tanks 1 and 4 will be active.

R1 O2,H2 MANF VLV TK1 (two) - OP (tb-OP)
O2 TK3 HTRS A,B (two) – AUTO

A11 CRYO TK4 HTRS O2 A,B (two) – AUTO

A15 CRYO TK5 HTRS O2 A,B (two) – OFF

Pre-Sleep Cryo Config

√MCC for deltas prior to configuring for pre-sleep.

For tonight's cryo config, Manifold 1 will be closed with O2 and H2 tanks 1 and 5 active.

R1 O2 TK3 HTRS A,B (two) – OFF
O2,H2 MANF VLV TK1 (two) - CL (tb-CL)

A15 CRYO TK5 HTRS O2 A - AUTO
H2 A,B (two) - AUTO

A11 CRYO TK4 HTRS O2,H2 A,B (four) - OFF

2. Comm Loop Overview for FD05

S/G 1 & A/G 1	S/G 2	A/G 2
EVA 1 - EV Crew	SSRMS Details	EVA 1 - IV Comm to MCC
Robotics EVA 1 Support	ISS Payloads	Transfer
Exercise Constraints	Russian Ops	All other STS Comm
	Rack Installs in ISS	
	DPC	
	All other ISS Comm	

3. Middeck Bag Layout
MSG 028 contains most of the middeck return bag layout updates. Bag I and Bag C are still being configured, so expect those layouts in the next couple of days.

4. KU GIMBAL LOCK AND STOW
MSG 027 includes procedures to lock the Ku band antenna gimbals and to stow the deployed assembly. We have scheduled the steps to lock the gimbals today as we are not planning any further troubleshooting. Locking the gimbals now verifies gimbal lock functionality and protects for any future failures. We are planning to stow the deployed assembly later on in the mission sometime after the OBSS is stowed.

5. Condensate CWC Check
To assist in our condensate changeout planning, please provide an estimate of how full condensate bag s/n 5096 (in the middeck) is at your convenience.

6. ET Window 4 Video
Unfortunately, the first downlink of the ET Window 4 video did not include the time just prior to Liftoff. The Imagery Team has requested to have the ET Window 4 video played back again via Standard Def starting with SSME ignition and out through ET Separation.

7. RGA
We appreciate the photos for the RGA housing paint scratches. The paint scratches on the housing are not an issue. This housing was brought back after the RGA R&R on 17A and refurbished, so these scratches are considered wear and tear and do not impact the thermal properties. Insulation blankets on the truss are sufficient for thermal protection.

8. JPM Window Constraints
Reminder that the JPM window shutters should remain closed when the EV crew is translating within 3 feet of the windows on the JPM Port Endcone for the MPAC&SEED task.

9. REPLACE PAGES 2-14, 2-16 AND 3-44 THROUGH 3-53.

REPLANNED

FD04

GMT 04/08/10 (098)
β = −18
MET Day 003

06 07 08 09 10 11 12 13 14 15 16 17 18 | 17 18 19 20 21 22 23 04/09 01 02 03 04

STS-131

| | | |

FD05 **REPLANNED**

GMT 04/09/10 (099)
β = −16
MET Day 003

18 19 20 21 22 23 004/00 01 02 03 04 05 06 (GMT) 05 06 07 08 09 10 11 12 13 14 15 16 (MET)

STS-131

| | | |

STS-131/19A FD05

REPLANNED

GMT Date 04/08 (098) | W | T D R S E | Z | D/N | O R B | MET Day 003 | STS ATI

CDR POINDEXTER | PLT DUTTON | MS2 METCALF-LINDENBURGER | NOTES

12:00 — 13:00 — 14:00 — 15:00 — 16:00

23:00 — 00:00 — 01:00 — 02:00

56 — 57 — 58

BIAS-XLV-ZVV

SLEEP (CDR) | SLEEP (PLT) | SLEEP (MS2)

FD05 EZ ACTIVITIES:
TEPC (ORB OPS, CREW SYSTEMS)
Check Status
OCAC Filter Inspection
Check MDDK Duct Screen
Hard reboot all PGSCs not shut down overnight, except: STS5 (RPOP2) and STS6 (WLES)

POST-SLEEP ACTIVITY (ORB OPS, CREW SYS) | POST-SLEEP ACTIVITY (ORB OPS, CREW SYS) | POST-SLEEP ACTIVITY (ORB OPS, CREW SYS)

PRIVATE MEDICAL CONFERENCE VIA S/G 2

EVA SYSTEMS: 1.211 HYGIENE BREAK
Steps 21-end. MCC-H will perform step 23.

STS-131/19A FD05

REPLANNED

GMT Date 04/08 (098) | W | TDRSE | Z | D/N | ORB | MET Day 003 | STS ATI | MS1 MASTRACCHIO | MS3 WILSON | MS4 YAMAZAKI | MS5 ANDERSON | NOTES

12:00 13:00 14:00 15:00 16:00

23:00 00:00 01:00 02:00

56 57 58

BIAS - XLV - ZVV

MS1 MASTRACCHIO	MS3 WILSON	MS4 YAMAZAKI	MS5 ANDERSON
SLEEP	SLEEP	SLEEP	SLEEP
POST-SLEEP ACTIVITY (ORB OPS, CREW SYS)	SLEEP LOGBOOK (SDBI 1634)	SLEEP LOGBOOK (SDBI 1634)	POST-SLEEP ACTIVITY (ORB OPS, CREW SYS)
	POST-SLEEP ACTIVITY (ORB OPS, CREW SYS)	POST-SLEEP ACTIVITY (ORB OPS, CREW SYS)	
EVA SYSTEMS: 1.211 HYGIENE BREAK MCC-H will perform steps 1-4, 16-20, and 23.			EVA SYSTEMS: 1.211 HYGIENE BREAK MCC-H will perform steps 1-4, 16-20, and 23.

3-45

FLT PLN/131/FLT

6

STS-131/19A FD05

REPLANNED

GMT Date 04/09 (099) | W | TDRSE | Z | D/N | ORB | MET Day 003 | STS ATT

CDR POINDEXTER	PLT DUTTON	MS2 METCALF-LINDENBURGER	NOTES
POST-SLEEP ACTIVITY (ORB OPS, CREW SYS)	EVA SYSTEMS: 1.211 HYGIENE BREAK Steps 21-end. MCC-H will perform step 23.	POST-SLEEP ACTIVITY (ORB OPS, CREW SYS)	
	EVA SYSTEMS: 1.216 EVA PREP		
		L17 Check MCIU filter screen	
EVA 1 INHIBIT PAD (EVA, TIMELINES)		TRANSFER OPS Ref. MPLM Transfer Lists and MSG 025	
	EVA SYSTEMS: 1.220 EMU PURGE		
	EVA SYSTEMS: 1.225 EMU PREBREATHE		
TRANSFER OPS Ref. MPLM Transfer Lists and MSG 025			
	EVA SYSTEMS: CREWLOCK DEPRESS/REPRESS CUE CARD Perform CREWLOCK DEPRESS	IVA SUPPORT PREP	
P/TV07 EVA (P/TV, SCENES) SETUP			
	C-LK DPRS/RPRS CC (POST DEPRESS)		
CWC-I FILL #7 (ORB OPS, ECLS) Perform Parts D & E Ref. MSG 012		IVA SUPPORT FOR EVA 1	NO UNISOLATED EXERCISE (WHILE CREW IN APFR)
CWC-I FILL #8 (ORB OPS, ECLS) Perform Parts D,E,&F Ref. MSG 012	MEAL		

Time scale: 03:00, 04:00, 05:00, 06:00; 16:00, 17:00, 18:00, 19:00, 20:00

Day 003: 59, 60, 61

BIAS-XLV-ZVV

7

STS-131/19A FD05

REPLANNED

GMT Date 04/09 (099) | W | TDRSE | Z | D/N | ORB | MET Day 003 | STS ATI

MS1 MASTRACCHIO	MS3 WILSON	MS4 YAMAZAKI	MS5 ANDERSON	NOTES
EVA SYSTEMS: 1.211 HYGIENE BREAK MCC-H will perform steps 1-4, 16-20, and 23.	POST-SLEEP ACTIVITY (ORB OPS, CREW SYS)	POST-SLEEP ACTIVITY (ORB OPS, CREW SYS)	EVA SYSTEMS: 1.211 HYGIENE BREAK MCC-H will perform steps 1-4, 16-20, and 23.	
EVA SYSTEMS: 1.216 EVA PREP			EVA SYSTEMS: 1.216 EVA PREP	
	MERLIN STATUS CK (Cue Card) GLACIER STATUS CK (Cue Card) STL STATUS CK (Cue Card)	DAILY TRANSFER LIST UPDATE Ref. Transfer Lists & MSG 025 KU-BD LOCK GIMBALS Ref. MSG 027 Perform LOCK GIMBALS		
	EXERCISE			
EVA SYSTEMS: 1.220 EMU PURGE		TRANSFER OPS Ref. MPLM Transfer Lists and MSG 025	EVA SYSTEMS: 1.220 EMU PURGE	
EVA SYSTEMS: 1.225 EMU PREBREATHE			EVA SYSTEMS: 1.225 EMU PREBREATHE	
EVA SYSTEMS: CREWLOCK DEPRESS/REPRESS CUE CARD Perform CREWLOCK DEPRESS	TRANSFER OPS Ref. MPLM Transfer Lists and MSG 025	EXERCISE	EVA SYSTEMS: CREWLOCK DEPRESS/REPRESS CUE CARD Perform CREWLOCK DEPRESS	
C-LK DPRS/RPRS CC (POST DEPRESS)		Remove Soft Dummy Panel at JLP1A1 (Velcro), then: 2.100 ZSR TRANSFER MPLM TO ISS (ASSY OPS, TRANSFER) Ref. MPLM Resupply Transfer List: Item 236	C-LK DPRS/RPRS CC (POST DEPRESS)	
EGRESS			EGRESS	NO UNISOLATED EXERCISE (WHILE CREW IN APFR)
RETRIEVE FGB FROM S1 ATA	MEAL	1.115 ZSR RACK DEPLOY IN JPM OR JLP (ASSY OPS, ACT&C/O)	RELEASE S1 ATA FQDs	

Time scale: 03:00, 04:00, 05:00, 06:00; 16:00, 17:00, 18:00, 19:00, 20:00

Day 003: 59, 60, 61

BIAS-XLV-ZVV

8

STS-131/19A FD05

REPLANNED

GMT Date 04/09 (099) | W | TDRSE | Z | D/N | ORB | MET Day 003 | STS ATI | CDR POINDEXTER | PLT DUTTON | MS2 METCALF-LINDENBURGER | NOTES

20:00

CWC-I FILL #8 Ref. pg 3-46

CWC-I TRANSFER
Transfer 2 CWC-Is to ISS

MEAL

NO UNISOLATED EXERCISE (WHILE CREW ON JEF)

07:00

POC: 2.7.501 DOUG STARTUP PROCEDURE
Step 1

ROBO: 1.300 EVA 1 SUPPORT

21:00

MEAL

NO UNISOLATED EXERCISE (WHILE CREW ON ESP#2)

BIAS-XLV-ZVV

IMU STAR OF OPPTY ALIGN (ORB OPS, GNC)

P/TV07 EVA
(P/TV, SCENES)
OPS

08:00

22:00

IVA SUPPORT FOR EVA 1

09:00

23:00

NO EXERCISE (WHILE ATA IS DUAL GRAPPLED BY SSRMS & POA

10:00

00:00

6

STS-131/19A FD05

REPLANNED

GMT Date 04/09 (099) | W | TDRSE | Z | D/N | ORB | MET Day 003 | STS ATI

MS1 MASTRACCHIO	MS3 WILSON	MS4 YAMAZAKI	MS5 ANDERSON	NOTES
RETRIEVE FGB FROM S1 ATA		1.115 ZSR RACK DEPLOY IN JPM OR JLP (ASSY OPS, ACT&C/O)	RELEASE S1 ATA FQDs	
PREP PLB ATA FOR RELEASE	MEAL		PREP PLB ATA FOR RELEASE	NO UNISOLATED EXERCISE (WHILE CREW ON JEF)
	ROBO: 1.300 EVA 1 SUPPORT	MEAL		
RELEASE PLB ATA & H/O TO SSRMS		2.106 RACK TRANSFER FROM MPLM TO ISS (MELFI-3) (ASSY OPS, TRANSFER) Ref. MPLM Resupply Transfer List: Item 108	RELEASE PLB ATA & H/O TO SSRMS	NO UNISOLATED EXERCISE (WHILE CREW ON ESP#2)
JEM SEED RETRIEVE			PLB CLEANUP & XLATION TO ESP-2	
AGB RETRIEVE/INSTALL		2.104 RACK TRANSFER FROM MPLM TO ISS (ER7, CQ2, MARES) (ASSY OPS, TRANSFER) Perform for CQ2 Ref. MPLM Resupply Transfer List: Item 170	AGB RETRIEVE/INSTALL	
SO RGA R&R		TRANSFER OPS Ref. MPLM Transfer Lists and MSG 025	SO RGA R&R	NO EXERCISE (WHILE ATA IS DUAL GRAPPLED BY SSRMS & POA
			P1 FHRC P-CLAMP RELEASE	

Time scale: 07:00, 08:00, 09:00, 10:00; 20:00, 21:00, 22:00, 23:00, 00:00

STS ATI: BIAS - XLV - ZVV

Z: 61, 62, 63, 64

10

STS-131/19A FD05

REPLANNED

GMT Date 04/09 (099) | W | TDRS E | Z | D/N | ORB | MET Day 004 | STS ATI

CDR POINDEXTER | PLT DUTTON | MS2 METCALF-LINDENBURGER | NOTES

00:00 — 11:00 — 12:00 — 13:00 — 14:00 — 01:00 — 02:00 — 03:00 — 04:00

64 — 65 — 66

BIAS - XLV - ZVV

CDR

P/TV07 EVA (P/TV, SCENES) OPS

P/TV07 EVA (DEACTIVATION) (P/TV, SCENES)

TRANSFER OPS Ref. MPLM Transfer Lists and MSG 025

EXERCISE

PLT

ROBO: 1.300 EVA 1 SUPPORT

TRANSFER OPS Ref. MPLM Transfer Lists and MSG 025

C-LK DPRS/RPRS CC (PRE REPRESS)

EVA SYSTEMS: CREWLOCK DEPRESS/REPRESS CUE CARD Perform CREWLOCK REPRESS

EVA SYSTEMS: 1.240 POST EVA With EMU H2O Recharge, No METOX Ref. CONSUMABLES TRACKING CUE CARD

EXERCISE

MS2

IVA SUPPORT FOR EVA 1

EXERCISE

TRANSFER OPS Ref. MPLM Transfer Lists and MSG 025

NOTES

NO UNISOLATED EXERCISE (WHILE CREW ON ESP#2)

STS-131/19A FD05

REPLANNED

GMT Date 04/09 (099) | W E Z | D/N | ORB | MET Day 004 | STS ATI

MS1 MASTRACCHIO

SO RGA R&R

WIF EXTENDER RELOCATE

S1 ATA FGB BOLTS

GET AHEADS

CLEANUP

INGRESS

C-LK DPRS/RPRS CC (PRE REPRESS)

EVA SYSTEMS: CREWLOCK DEPRESS/REPRESS CUE CARD
Perform CREWLOCK REPRESS

EVA SYSTEMS: 1.240 POST EVA
With EMU H2O Recharge, No METOX
Ref. CONSUMABLES TRACKING CUE CARD

MS3 WILSON

ROBO: 1.300 EVA 1 SUPPORT

TRANSFER OPS
Ref. MPLM Transfer Lists and MSG 025

GLACIER COLD HEAD CHECK (ASSY OPS, PAYLOADS)

MERLIN STATUS CK (Cue Card)

STL STATUS CK (Cue Card)

AEM UNIT#1 CK (Cue Card)

AEM UNIT#2 CK (Cue Card)

TRANSFER TAGUP
Coordinate with transfer counterparts

MS4 YAMAZAKI

TRANSFER OPS
Ref. MPLM Transfer Lists and MSG 025

2.104 RACK TRANSFER FROM MPLM TO ISS (ER7, CQ2, MARES)
(ASSY OPS, TRANSFER)
Perform for MARES
Ref. MPLM Resupply Transfer List: Items 262 & 263

TRANSFER OPS
Ref. MPLM Transfer Lists and MSG 025

2.110 WORF TRANSFER MPLM TO ISS
(ASSY OPS, TRANSFER)
Steps 1.1-1.18

PRE-SLEEP ACTIVITY
(ORB OPS, CREW SYS)

TRANSFER TAGUP
Coordinate with transfer counterparts

MS5 ANDERSON

P1 FHRC P-CLAMP RELEASE

SO RGA R&R

P1 FHRC P-CLAMP RELEASE

GET AHEADS

CLEANUP

INGRESS

C-LK DPRS/RPRS CC (PRE REPRESS)

EVA SYSTEMS: CREWLOCK DEPRESS/REPRESS CUE CARD
Perform CREWLOCK REPRESS

EVA SYSTEMS: 1.240 POST EVA
With EMU H2O Recharge, No METOX
Ref. CONSUMABLES TRACKING CUE CARD

NOTES

NO UNISOLATED EXERCISE (WHILE CREW ON ESP#2)

BIAS_XLV_ZVV

STS-131/19A FD05

REPLANNED

GMT Date 04/09 (099) | W | TDRSE | Z | D/N | ORB | MET Day 004 | STS ATT | CDR POINDEXTER | PLT DUTTON | MS2 METCALF-LINDENBURGER | NOTES

15:00 16:00 17:00 18:00

66 67 68 69

04:00 05:00 06:00 07:00 08:00

BIAS-XLV-ZVV

PRE-SLEEP ACTIVITY (ORB OPS, CREW SYS) Air Quality Report

L9 PAYLOAD STATION A/G (two) - OFF
PRIVATE MEDICAL CONFERENCE VIA A/G 2

PRE-SLEEP ACTIVITY (ORB OPS, CREW SYS)

SLEEP

EXERCISE

PRE-SLEEP ACTIVITY (ORB OPS, CREW SYS)

SLEEP

PRE-SLEEP ACTIVITY (ORB OPS, CREW SYS)

SLEEP

CREW WAKEUP AT 04/15:00

STS-131/19A FD05

REPLANNED

GMT Date 04/09 (099) | W | TDRS E | TDRS Z | DON | ORB | MET Day 004 | STS ATI

MS1 MASTRACCHIO | MS3 WILSON | MS4 YAMAZAKI | MS5 ANDERSON | NOTES

04:00 — PRE-SLEEP ACTIVITY (ORB OPS, CREW SYS)

15:00

05:00 — TRANSFER BRIEF
Call down status to MCC

PRE-SLEEP ACTIVITY (ORB OPS, CREW SYS)

16:00

06:00

17:00

07:00 — **CREW WAKEUP AT 04/15:00**

18:00

08:00

SLEEP

BIAS-XLV-ZVV

66 67 68 69

MSG 024 - FD05 MISSION SUMMARY

Discovery,

Excellent job getting Leonardo attached to ISS yesterday! We're looking forward to following along with EVA 1 today!

YOUR CURRENT ORBIT IS: 191 X 182 NM

NOTAMS (ADDED KKI, HNL, DELETED YQX.)

EDW -	EDT 22R/04L IN USE. EDW 22/04 CLOSED FOR CONSTRUCTION.
EDW -	LAKEBED RWYS RED.
NOR -	LAKEBED RWYS GREEN.
FOK -	RWY 06/24 CLOSED.
DOV -	RWY 32 REIL OTS.
FMH -	RWY 23 ALS OTS.
YYT -	TACAN UYT23 AZIMUTH OTS.
JTY -	RWY 18 ALS OTS.
MYR -	RWY 18/36 CLOSED FROM 0340 - 0930 GMT.
KKI -	TACAN RIY92 OTS.
HNL -	RWY 08R/26L CLOSED.
IKF -	NOT USABLE. NO AGREEMENT.
BEN -	NOT RECOMMENDED/NOT SUPPORTED

<u>NEXT 2 PLS OPPORTUNITIES:</u>

EDT22R	ORB 64 – 4/00:27	SKC	7	230/3P5
EDT22R	ORB 79 – 4/23:16	SCT250	7	210/5P7

<u>OMS TANK FAIL CAPABILITY:</u>

L OMS FAILS: NO
R OMS FAILS: NO

<u>LEAKING OMS PRPLT BURN:</u>

L OMS LEAK: ALWAYS BURN RETROGRADE
R OMS LEAK: ALWAYS BURN RETROGRADE

<u>OMS QUANTITIES(%)</u>

L OMS OX = 34.08 R OMS OX = 35.28
FU = 33.60 FU = 35.21

END OF PAGE 1 OF 2, MSG 024

MSG 024 - FD05 MISSION SUMMARY

DELTA V AVAILABLE:

OMS	371 FPS
ARCS (TOTAL ABOVE QTY1)	31 FPS
TOTAL IN THE AFT	402 FPS
ARCS (TOTAL ABOVE QTY2)	64 FPS
FRCS (ABOVE QTY 1)	30 FPS
AFT QTY 1	81 %
AFT QTY 2	43 %

THERE ARE NO FAILURE/IMPACT/WORK AROUNDS FOR TODAY.

END OF PAGE 2 OF 2, MSG 024

Good Morning Naoko and Steph,

It was great to see you in the MPLM yesterday beginning transfer ops! Thank you for the extra work at the end of what was already a busy day.

As you know, today is the first of two rack-transfer days. You'll begin by transferring the ZSR from MPL1S2 to ISS, followed by MELFI 3, Crew Quarters, and the MARES rack. In addition, you can also expect to rearrange a bit of the MPLM in preparation for the FD06 rack transfers.

The Transfer List Excel file, FD05_Transfer_List_STS131.xls, locations are:

- Shuttle: **C:\OCA-up\transfer** (KFX machine)
- Station: **K:\OCA-up\transfer**

Transfer Notes

- **JLP1A1 Rack Bay:** The ISS crew has been asked to remove some temporarily stowed items from the JLP1A1 rack bay prior to the ZSR installation today. Please confirm this bay is empty prior to transferring the ZSR. In addition, if the soft dummy panel is still installed, please remove it and temp stow on the JPM1D5 Rack Front.

- **MMOD Shields:** In the event the MMOD Shields are retrieved and brought inside during today's EVA, we recommend you temp stow them in the MPLM endcone until their return location (MPL1A4_A1) is open.

- **ISP Removal Procedure Update:** The OSO team has made some updates to 1.248 ISP REMOVAL which have been uplinked directly to iPV. We have also uplinked an updated version in today's transfer message to replace the hard-copy in your MPLM Resupply Transfer Book.

FD05 Choreography (in timeline order)

- Remove NOD2P5 Crew Quarters bumpout to allow Crew Quarters install at NOD2O5.
- **Item 236:** Transfer ZSR from MPL1S2 rack front to JLP1A1.
- **Items 786 and 787:** Temp stow ziplock of RSR/ZSR launch brackets and pip pins for return - will add brackets and pip pins from MPL1S4 ZSR on FD06.
- **Item 128:** Retrieve KBARS/PIVOT PINS from MPL1A4_A1 prior to rack transfers.
- **Items 106 and 107:** Remove handrails (qty 2) from MELFI rack-front prior to transferring rack.
- **Item 108:** Transfer MELFI 3 rack from MPL1A1 to JPM1A1.
- Remove M-bag from F1_A1 and temp stow in endcone.
- Fold F1_A1 RSP fence to provide clearance for Crew Quarters rack removal.
- **Item 170:** Transfer Crew Quarters rack from MPL1P1 to NOD2O5.
- Re-install NOD2P5 Crew Quarters bumpout once new Crew Quarters is installed at NOD2O5.
- **Item 116:** Retrieve and transfer ARIS HARDWARE 1 bag from MPL1A2_H1 prior to deploying bungee jail.
    - ARIS Mod Temp TCS Supply and ARIS Mod Temp TCS Return umbilicals required prior to EXPRESS Rack 7 transfer on FD06.
- Deploy inter-rack bungee jail across A1 empty bay for M-bag temp stow.
- Relocate F1_A1 M-bag from endcone to A1 bungee jail.

- Remove M-bags from F3_C1 and A3_A1 RSP locations and temp stow in A1 bungee jail.
- Retrieve foam pieces for TeSS return from F4_A1 M-03 bag for use while folding A3 fences (reference Assembly Operations, 2.120 TESS TRANSFER FROM ISS TO MPLM as needed).
- Fold fences on F3_C1, A3_A1, and A3_C1 locations to clear translation path for rack transfers.
    - While folding A3 front-side fences, install foam pieces per TeSS Transfer from ISS to MPLM.
- Remove MARES stowage bags from rack and temp stow prior to transferring rack.
- **Items 260 and 261:** Remove handrails (qty 2) from MARES rack-front prior to transferring rack.
- **Item 262 and 263:** Transfer MARES rack and Knee Braces from MPL1S3 to COL1F3.
- Transfer MARES stowage bags to MARES rack at COL1F3.
- **Item 754:** Transfer MPAC SEED hardware and temp stow in MPLM endcone after MPAC SEED STOW activity.
- **Item 785:** Temp stow WORF Launch Bolts ziplock for return at MPL1S4_K2.
- Transfer pre-packed bags/items from LAB1P2 and P4 to MPLM endcone in preparation for FD06 rack transfers.

FD05 Transfer Get-aheads

☑	Get-ahead Activity	Nominally scheduled
	Complete transferring pre-packed bags/items from LAB1P4 to MPLM endcone.	Late FD05
	Transfer pre-packed bags/items from LAB1P2 to MPLM endcone in preparation for EXPRESS Rack 7 transfer on FD06.	FD06
	Transfer ZSR from MPL1S4 to LAB1P4.	FD06
	Install pivot pins for rotating MPL1A4, F2, and F4 RSPs.	FD06
	Transfer ISPs from NOD3F5 to MPL1S3, P2, and P3.	FD06

Please incorporate uplink pages as follows (we've listed the updates in the order they printed out for you):

In the Middeck Transfer List **RETURN** tab
Replace the following pages:
Return 1
Return 3

In the MPLM Resupply Transfer List **PROCEDURES** tab
Replace all pages of the following procedure:
1.248 INTEGRATED STOWAGE PLATFORM (ISP) REMOVAL

In the MPLM Return Transfer List **RETURN** tab
Replace the following pages:
Return 17
Return 19
Return 22

<u>FD06 Choreography</u> (in timeline order)

- Transfer additional pre-pack items from LAB1P2 and P4 to endcone if not complete on FD05.
- **Item 717:** Transfer Silver Biocide Syringe Kit (s/n 1006) to middeck prior to first silver CWC fill.
- **Item 171:** Remove handrail (qty 1) from WORF rack-front prior to transferring rack.
- **Item 127:** Retrieve WORF Closeout Seals and Lower Restraints prior to WORF XFER activity.
- **Items 172 and 173:** Transfer WORF rack and Knee Braces from MPL1P2 to LAB1D3.
- **Item 431.2:** Stow LADA Root Module Return Kits in Bag 431 following the БИО-5-DEINSTL activity.
- **Item 264:** Transfer ZSR from MPL1S4 rack front to LAB1P4.
- **Items 786 and 787:** Stow RSR/ZSR launch brackets and pip pins in ziplock with other RSR/ZSR hardware for return.
- **Items 174 and 175:** Remove handrails (qty 2) from EXPRESS Rack 7 rack-front prior to transferring rack.
- **Item 176:** Transfer EXPRESS Rack 7 from MPL1P3 to LAB1P2.
- **Item 763:** Remove MPL1P3 knee braces (qty 2) and stow in MPL1A4_A1 for return prior to ISP install at P3.
- **Items 758, 759 and 760:** Transfer ISP racks (qty 3) from NOD3F5 to MPL1S2, P3, and P2.
- **Items 102 and 213:** Install pivot pins on MPL1F2, F4, and A4 RSPs to allow RSP rotations.
- **Item 214:** Transfer Radiator Stowage Beams (Inboard and Outboard) from MPL1S1_D2 for EVA 2 prep.
- **Item 425.1:** Stow Post-flight Analysis Packets in Bag 425 following sampling activities.

Have a nice day and let us know if you have any questions!

- The STS-131 Transfer Team

The MMT reviewed orbiter systems and mission progress. Discovery continues to perform well. The team is assessing the Ku Stow plan and is currently planning to perform gimbal lock at the end of FD05. Ku antenna stow would be deferred until after OBSS berth since the camera D views are desirable for that activity, and the stowed antenna would partially block camera D.

The team also reviewed the possibility of adding a docked day in order to accomplish all of the timelined mission objectives and to perform the late inspection while docked. This plan would insert the additional docked day after FD11. The collective teams will evaluate the additional day and a decision is expected at the FD05 MMT.

Damage Assessment Team: The DAT review of the downlink imagery and data continues. The Focused Inspection meeting is scheduled for tonight, but so far, a Focused Inspection is not expected. That determination will be finalized tonight. The DAT has reviewed all of the downlinked TPS imagery and has cleared much of the orbiter including the ET doors and the port ET door tile chip. The remaining areas being reviewed are the FRCS gap filler, the vertical stabilizer, and 3 small damage sites on the LOMS pod tile. All of this analysis is expected to be completed within the next day or two. Additionally, the review of the RCC is continuing and is expected to be completed later tonight.

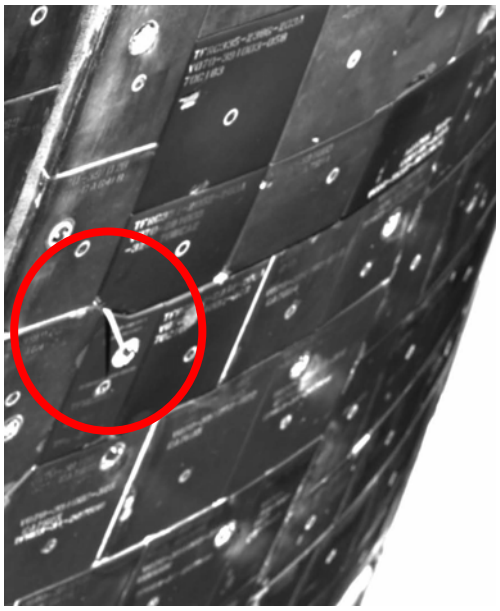

FRCS Protruding Gap Filler

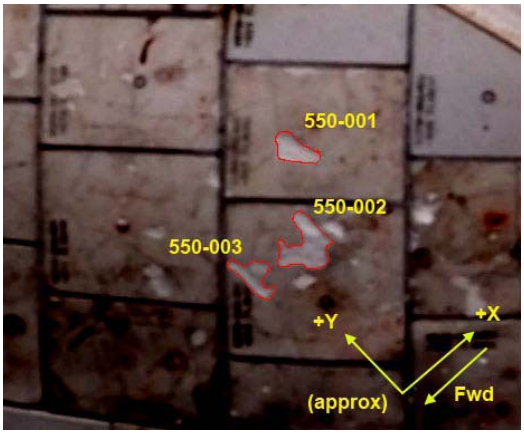

LOMS Pod Tile damage

In order to lock the Ku-band antenna gimbals without stowing it, perform the **LOCK GIMBALS** steps below only. To stow the Ku-band antenna at a later time, perform the **STOW DEPLOYED ASSEMBLY** steps below.

LOCK GIMBALS

R13L 1. √PL BAY MECH PWR SYS 1,2 (two) – OFF
A1U √CNTL – CMD
√RADAR OUTPUT – LOW

NOTE
If docked to ISS √MCC for Traveling Wave Tube inhibit prior to next step

2. KU BD PWR – ON
MODE – RDR PASSIVE
CNTL – PNL
KU BD sel – MAN SLEW

A2 √DIGI DIS SEL – EL/AZ
A1U SLEW RATE – as reqd

SLEW ELEV – as reqd
A2 R/EL ind: -27.0 (± 1°)

A1U SLEW AZM – as reqd
A2 RR/AZM ind: -123.0 (± 1°)

R13L 3. KU ANT – STO

A2 √R/EL ind: -29.0 (± 1°)
√RR/AZM ind: -125.0 (± 1°)

00:00 Start Event Timer
A2 Monitor KU ANT gimbal angles for 50 sec (gimbal lock test), then:

* If KU ANT gimbal movement occurs within 50 sec, and/or if gimbal angles incorrect after 50 sec, perform MAL, MECH, 9.3c *

A1U 4. KU BD PWR – OFF (Expect 'BCE BYP KU' msg)

Install sw guard (stowed in IFM Tool Kit) over the KU BD PWR sw

R14:C cb MNB KU ELEC – op
cb MNC KU SIG PROC – op

R13L KU ANT – GND

NOTE
KU BD PWR must remain OFF throughout the remainder of the mission to avoid reopening the gimbal lock pins.

This portion of the procedure will lock the gimbals without stowing the antenna. Stowing the Ku-Band would block the Camera D view which is needed to support OBSS Berthing operations.

STOW DEPLOYED ASSEMBLY

> CAUTION
> √MCC to verify Gimbals are locked before applying this procedure

> CAUTION
> If OBSS cradled, OBSS MPMs must be stowed prior to Ku-band antenna stow to prevent antenna/OBSS contact

1. If the OBSS is cradled and shuttle is docked to ISS:

MA73C :A	MCA LOGIC	MNB MID 2 – OFF
:B		MNA MID 3 – OFF

2. Config CCTVs to monitor KU Ant motion
   Point CCTV as reqd
   Record all motion on VTR

R13L	3. √PL BAY MECH PWR SYS 1,2 (two)	– OFF
A1U	√KU BD PWR	– OFF
	√CNTL	– PNL
R13L	√KU ANT	– GND

> CAUTION
> Ku Ant switch must be in GND position prior to use of Direct Stow sw to prevent phase-to-phase short of STO/DPY mtrs

4. KU ANT DIRECT STO – ON
   PL BAY MECH PWR SYS 1,2 (two) – ON
   √KU ANT tb – STO (~23-46 sec)
   DIRECT STO – OFF
   PL BAY MECH PWR SYS 1,2 (two) – OFF

5. If MCA LOGIC switches were turned off in step 1 above:

MA73C :A	MCA LOGIC	MNB MID 2 – ON
:B		MNA MID 3 – ON

From the LOCK GIMBALS procedure above, the KU BD PWR is OFF and power is removed to Electronics Assembly 1. This configuration prevents the KU ANT switch from being able to stow the Ku Antenna. The steps above bypass this configuration using the KU Direct Stow switch, which will stow the antenna in its current (gimbal locked) configuration.

Good Morning,

Below you will find the updated 5-MLE bag layouts. The current 5-MLE bag configurations optimize the weight and c.g. of the stacks.

- The STS-131 Middeck Stowage Team

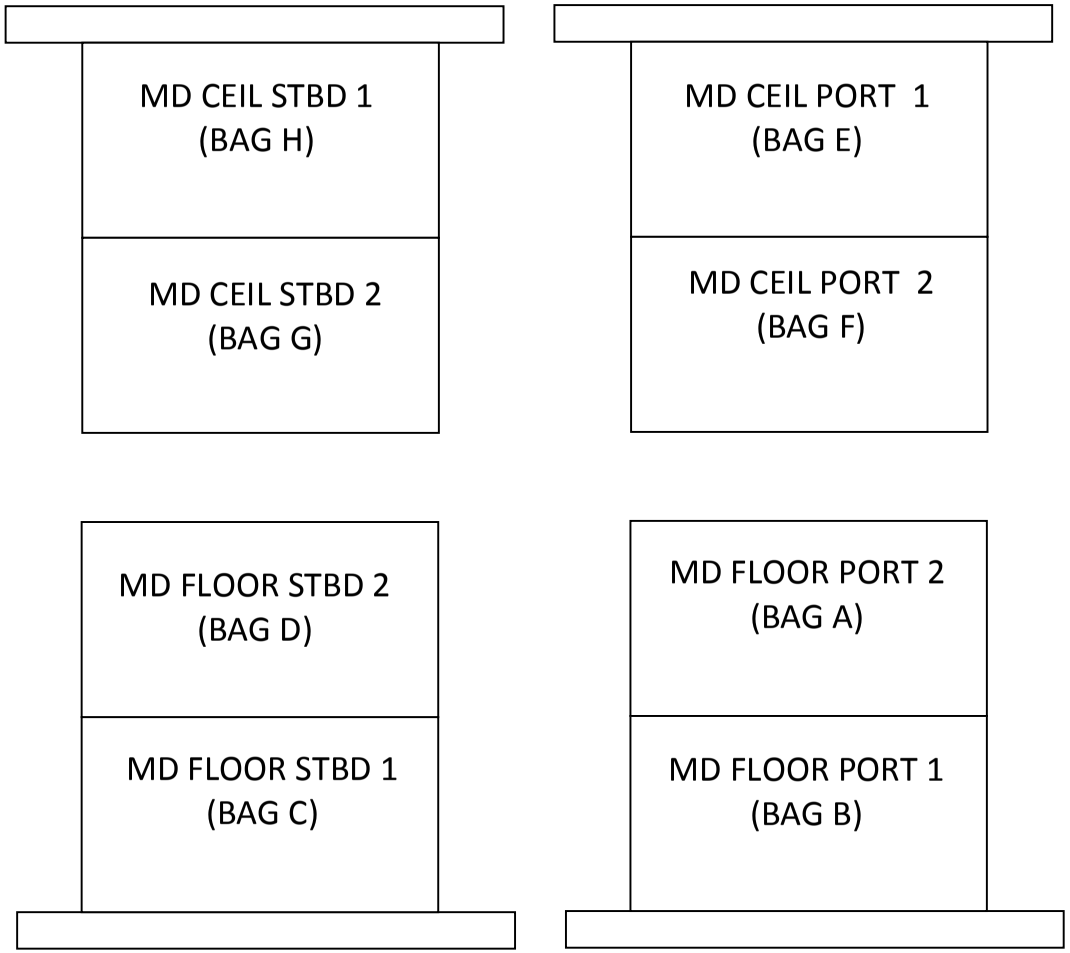

VIEW: DITCH LOOKING AFT

MD CEIL STBD 2(BAG G)

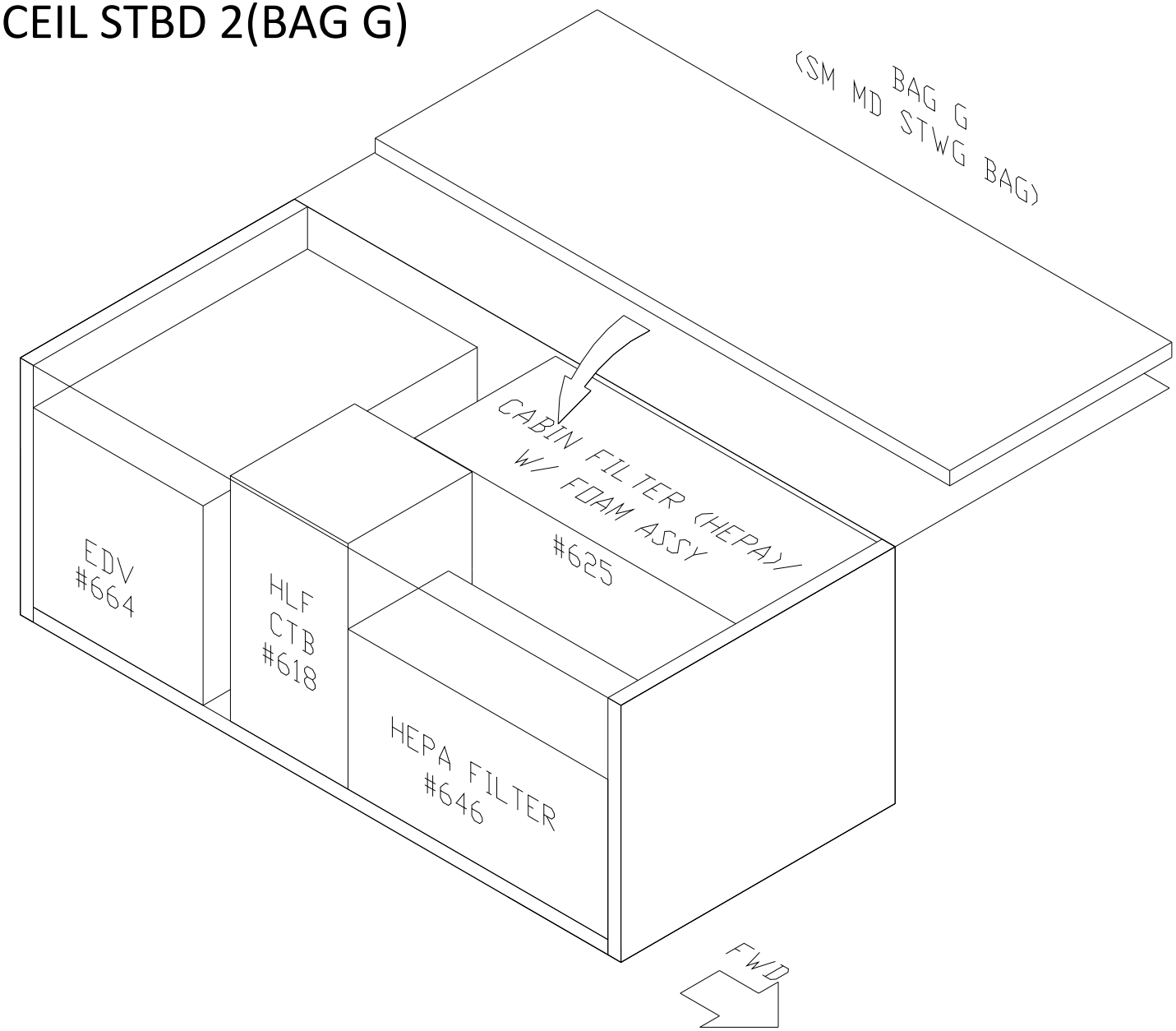

MD CEIL STBD 1(BAG H)

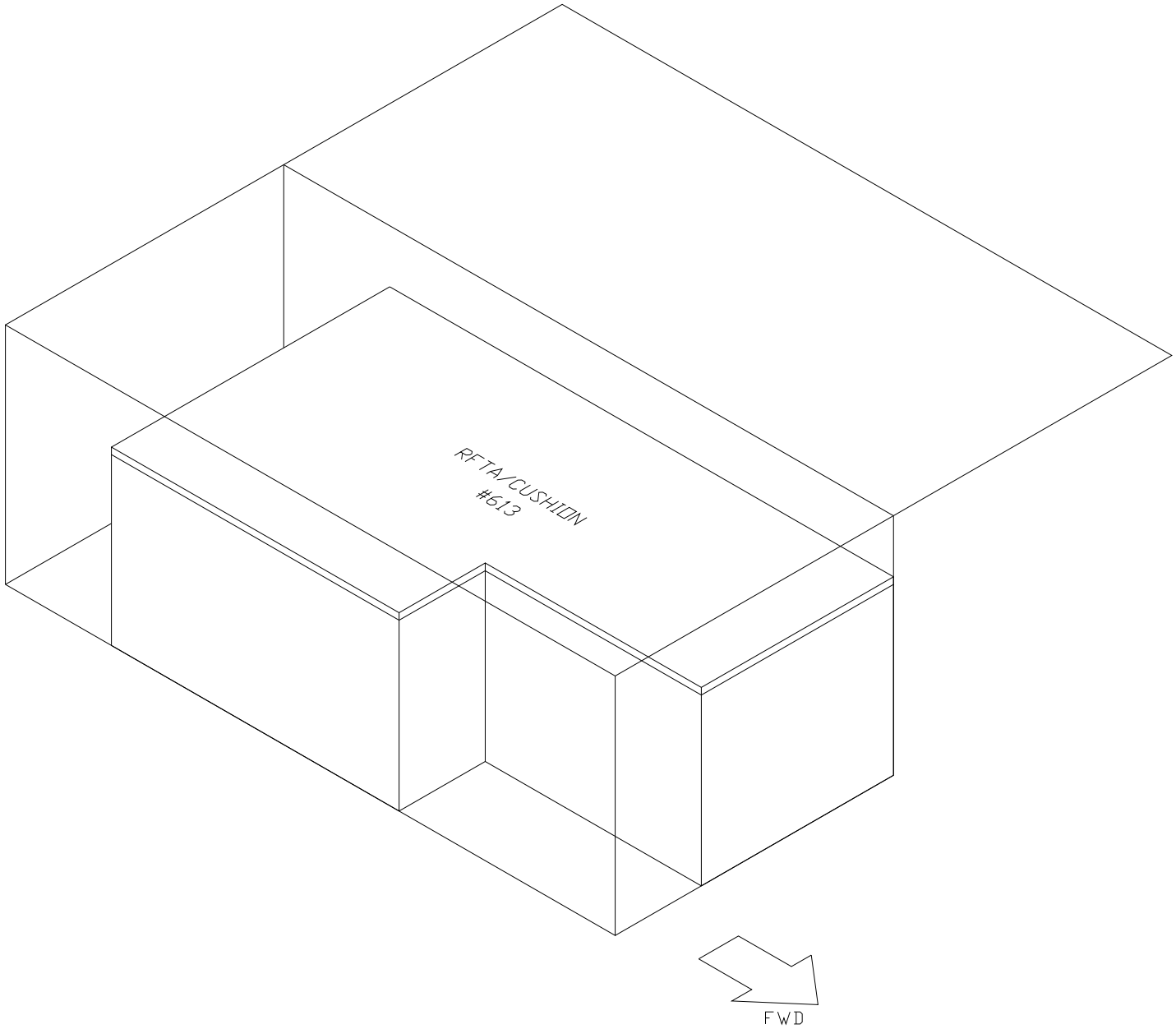

MD FLOOR PORT 2 (BAG A)

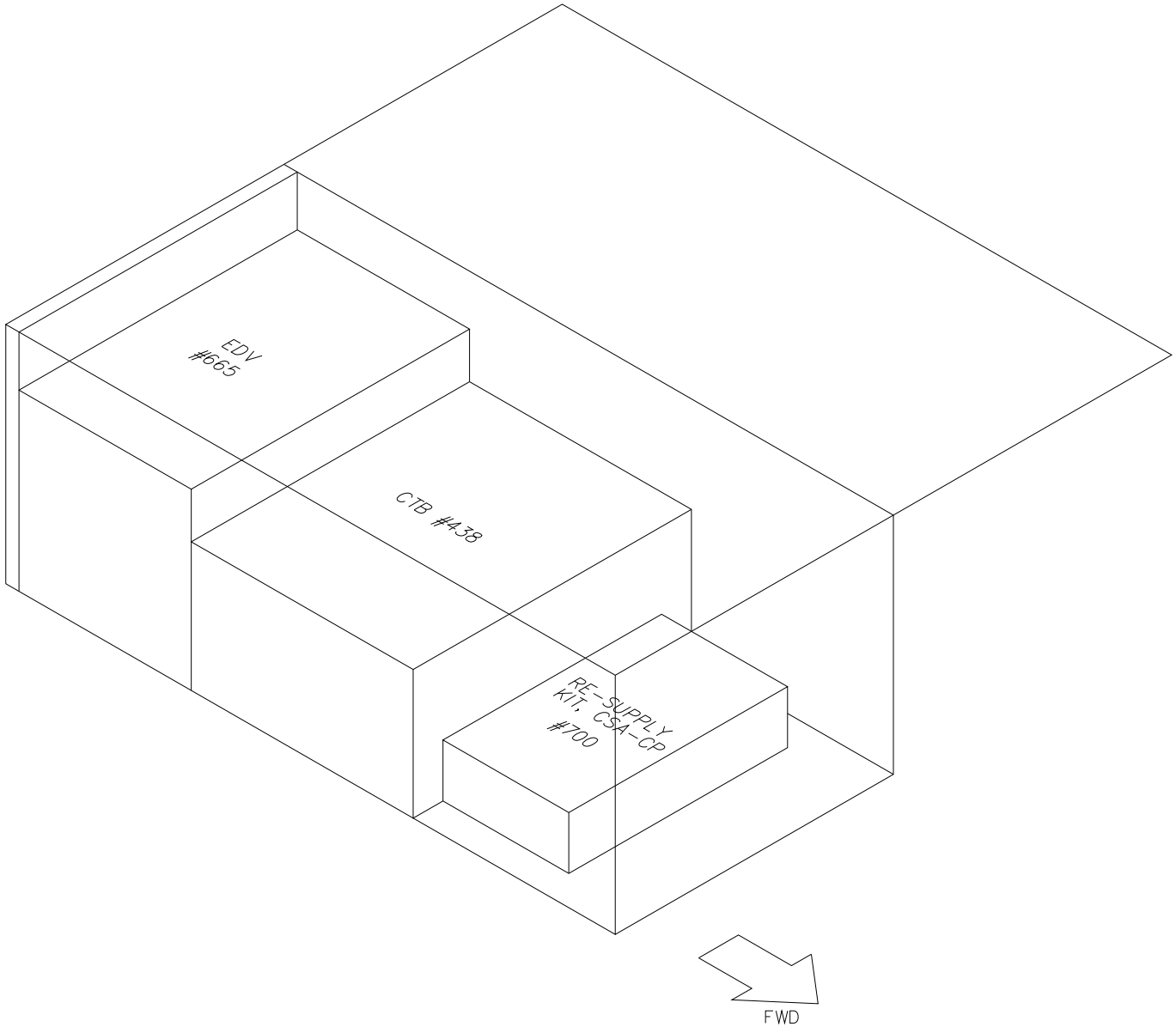

MD FLOOR PORT 1 (BAG B)

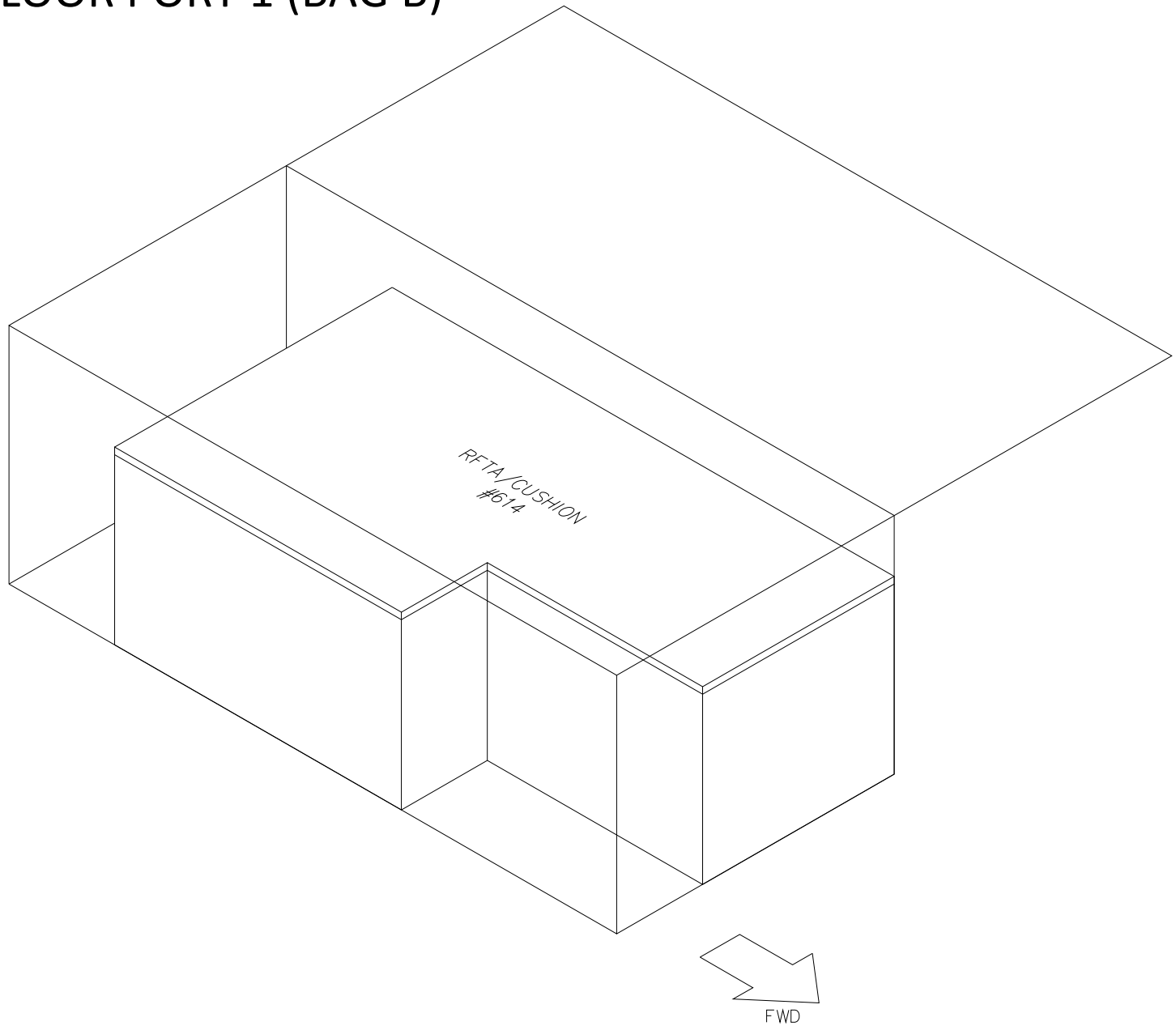
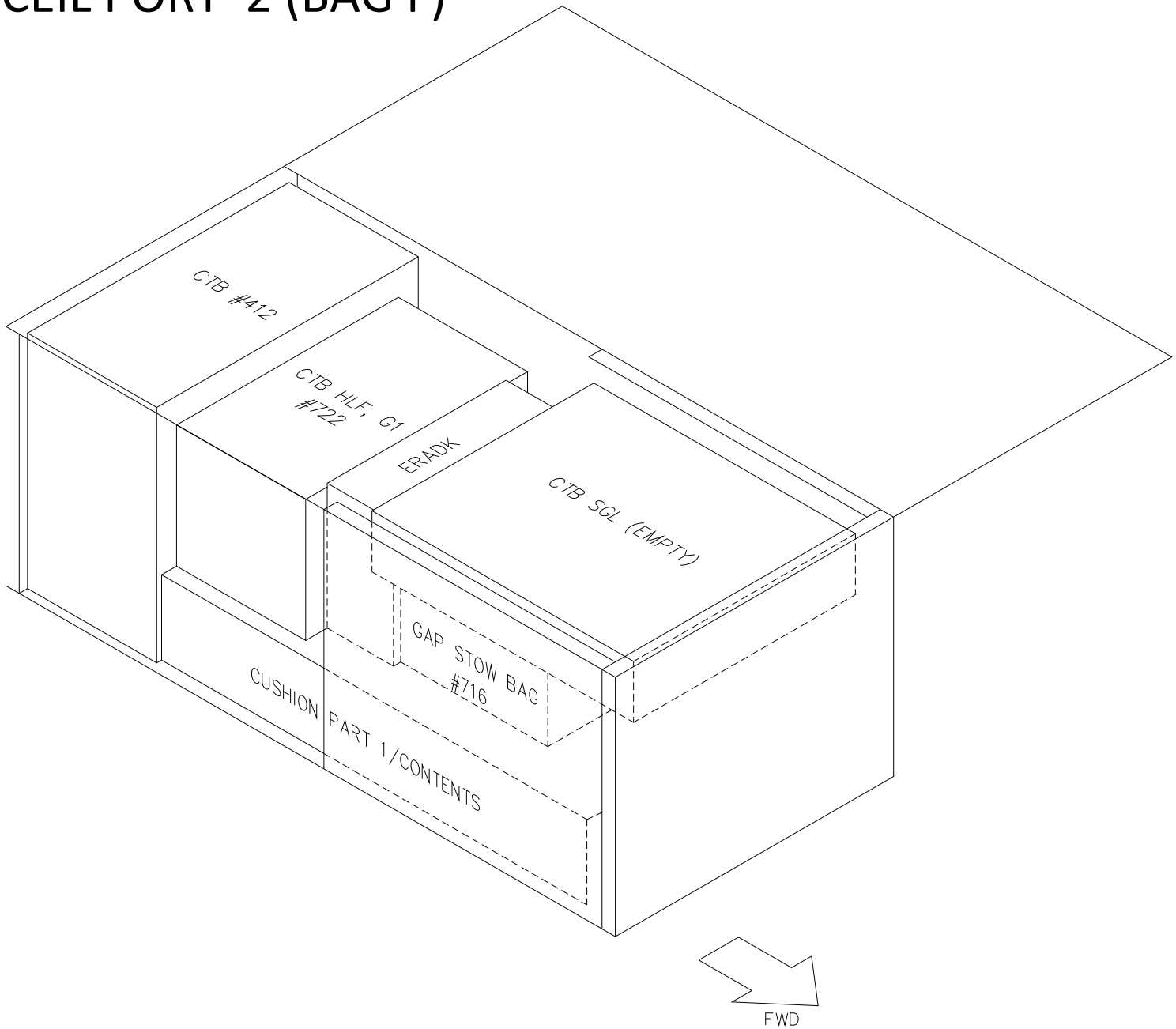
MD CEIL PORT 2 (BAG F)