STS-130/20A

FD 08 Execute Package

MSG	Page(s)	Title
088C	1 - 14	FD08 Flight Plan Revision
089A	15 - 16	FD08 Mission Summary
090A	17 - 22	FD08 Transfer Message
091	23	FD08 Crew Choice Downlink
092	24 - 47	Stowage Locations for FD08 (GMT 046)
093	48 - 50	Cupola Vestibule Outfitting Matrix
094	---	Daily Summary (Electronic Only)
095	51 - 56	Descent Sample Transfer from MELFI to GLACIER
096	57	CGBA Swap Overview
097	---	FD08 PAO Event Summary - WOR RADIO, KTVI-TV AND WREG-TV (Electronic Only)
098A	---	FD08 PAO EVENT SUMMARY MESSAGE - EXPLORER SCHOOLS EDUCATION EVENT (Electronic Only)
099	---	IMMT Results - 2/14/10 (Electronic Only)
100	58 - 66	NH3 Jumper MLI Closeout Photo Details
102	67	FD08 EVA Deltas
103	68 - 71	20A CGBA Swap - Unpowered
104	72 - 84	SSRMS Cupola Return to N3 Port
105	85 - 87	Reference Data for Contingency Cupola Return

Approved by FAO:

R. Smith

Last Updated: Feb 14 2010 9:11 PM GMT

JEDI *(**J**oint **E**xecute package **D**evelopment and **I**ntegration), v3.0*

The 7 bad words according to George Carlin:	The 7 bad words according to Shannon Lucid:
1. CENSORED	1. Darn!
2. CENSORED	2. Rats!
3. CENSORED	3. Barnacles!
4. CENSORED	4. Shoot!
5. CENSORED	5. Crickey!
6. CENSORED	6. Shucks!
7. CENSORED	7. Whoopie

THIS PAGE INTENTIONALLY BLANK

MSG INDEX

MSG NO.	TITLE
MSG-088	FD08 Flight Plan Revision
MSG-089	FD08 Mission Summary
MSG-090	FD08 Transfer Message
MSG-091	FD08 Crew Choice Downlink
MSG-092	Stowage Locations for FD08 (GMT 046)
MSG-093	Cupola Vestibule Outfitting Matrix
MSG-094	Daily Summary
MSG-095	Descent Sample Transfer from MELFI to GLACIER
MSG-096	CGBA Swap Overview
MSG-097	FD08 PAO Event Summary - WOR Radio, KTVI-TV And WREG-TV
MSG-098	FD08 PAO Event Summary Message - Explorer Schools Education Event
MSG-099	IMMT Results - 2/14/10
MSG-100	NH3 Jumper MLI Closeout Photo Details
MSG-102	FD08 EVA Deltas
MSG-103	20A CGBA Swap - Unpowered
MSG-104	SSRMS Cupola Return to N3 Port
MSG-105	Ref Data for Contingency Cupola Return

1. Post-Sleep Cryo Config

For today's Post-Sleep cryo config, O2 tanks 2, 3, and 4 and H2 tanks 2 and 4 will be active.

R1 O2,H2 MANF VLV TK2 (two) - OP (tb-OP)
O2 TK3 HTR A - AUTO

A11 CRYO TK4 HTR O2 A - AUTO

A15 CRYO TK5 HTR O2 A - OFF

Pre-Sleep Cryo Config

√MCC for deltas prior to configuring for Pre-Sleep.

For tonight's Pre-Sleep cryo config, Manifold 1 will be closed with O2 tanks 1 and 5 and H2 tanks 1 and 4 active.

A15 CRYO TK5 HTR O2 A - AUTO

A11 CRYO TK4 HTR O2 A - OFF

R1 O2 TK1 HTR A - AUTO
H2 TK1 HTRS A,B (two) - AUTO
O2,H2 TK2 HTRS A,B (four) - OFF
O2 TK3 HTR A - OFF
O2,H2 MANF VLV TK1 (two) - CL (tb-CL)

2. Zambo & Steve,

We have a minor delta to the N3 POT BUS VENT/FILL activity scheduled at MET 6/18:05. In Assy Ops procedure {1.109 NODE 1 AND NODE 3 POTABLE WATER AND URINE BUS PURGE WITH VACUUM BACKFILL OF POTABLE WATER BUS}, step 11.5, rather than using a PWR, you will need to use CWC-I S/N 2009. The PWRs available will have too much gas. To connect the CWC-I, you will need a R-Y adapter. Ask TJ for that R-Y adapter when you're ready for it and then return it to him when you're done.

Thank you!

3. REPLACE PAGES 2-26 THROUGH 2-29 and 3-80 THROUGH 3-87.

NO EXERCISE
[FROM 3RD SET OF BOLTS RELEASED UNTIL A-BOLTS COMPLETE]

REPLANNED

FD08
GMT 02/14/10 (045)
MET Day 006

12 22 23 02/15 01 02 03 04 05 06 07 08 09 007/00
13 14 15 16 17 18 19 20 21 22 23

STS-130	CDR ZAMKA	LOG; POST SLEEP; N2-I; CWC; INIT #3; EXERCISE; CWC; TERM; CWC; XFER; ILUM-O; IMU; N2-T; N3 URIN/POT BUS VENT; N3 URINE BUS FILL; N3 POT BUS VENT/FILL; MEAL; COND; CHG/O; XFER OPS
	PLT VIRTS	LOG; POST SLEEP; PFC OCA; POST SLEEP; CUPOLA DEPRESS PART1; SSRMS CONT PROC RVW; DPRS P2; CUPOLA; DEPRESS; PART3; MNVR TO CPLA & GRPL; N3P*; MEAL; PAO; CUPOLA UNBTH & RELOC; RELOC; LIMP; BRAKE; NOD3; ENABLE; CBCS MOVE N3N N3P; N3N*; NOD304 RACK OUTFIT; EXERCISE; CUP VEST OUTFIT PT1
	MS1 HIRE	POST SLEEP; CUPOLA DEPRESS PART1; SSRMS CONT PROC RVW; DPRS P2; CBCS S/U; CUPOLA; DEPRESS; PART3; MNVR TO CPLA & GRPL; CUPOLA CBM DEMATE; PAO; CUPOLA UNBTH & RELOC; VERIFY; RELOC; 1ST STG CAP; LIMP; 2ND STG CAP; BRAKE; MEAL; EXERCISE; STBD DECK IMV C/O; STAND; SPINAL; CUP VEST OUTFIT PT1
	MS2 ROBINSON	POST SLEEP; PFC OCA; POST SLEEP; XFER; UPDATE; EXERCISE; EVA TOOL CONFIG; N3 URIN/POT BUS VENT; N3 URINE BUS FILL; N3 POT BUS VENT/FILL; MEAL; XFER OPS; STAND; SPINAL; XFER OPS; NOD3@; N3 NAD MPEV INSTL; ♣
	MS3 PATRICK	ASPIRIN; LOG; POST SLEEP; PFC OCA; POST SLEEP; EXERCISE; EVA TOOL CONFIG; TOOL AUDIT; GALLEY@; E_LK PREP; GALLEY#; P/TV06; S/U; P/TV06 ROBO OPS; MEAL; GLCR; P/TV09; CGBA UNIT SWAP; STAND; SPINAL
	MS4 BEHNKEN	ASPIRIN; POST SLEEP; GLCR; EVA TOOL CONFIG; TOOL AUDIT; E_LK PREP; MEAL; SMP XFR RVW; MLF GLCR 20A SMP XFR; BSA-T; INSTL^; EMU SWP; STAND; SPINAL; EXER
STS	DAY/NIGHT	
	ORBIT	103; 104; 105; 106; 107; 108; 109; 110; 111
	TDRS W E Z	
	ORB ATT	BIAS -XLV -ZVV
ISS	TDRS AVAIL	
	NOTES	*HATCH UNLATCH; #MORNING CONFIG; @OVERNIGHT CONFIG; *HATCH LATCH; ^METOX & BATTERY; ♣N3 STBD MF; @NADIR HATCH OPEN; GROUND BOLTING

4

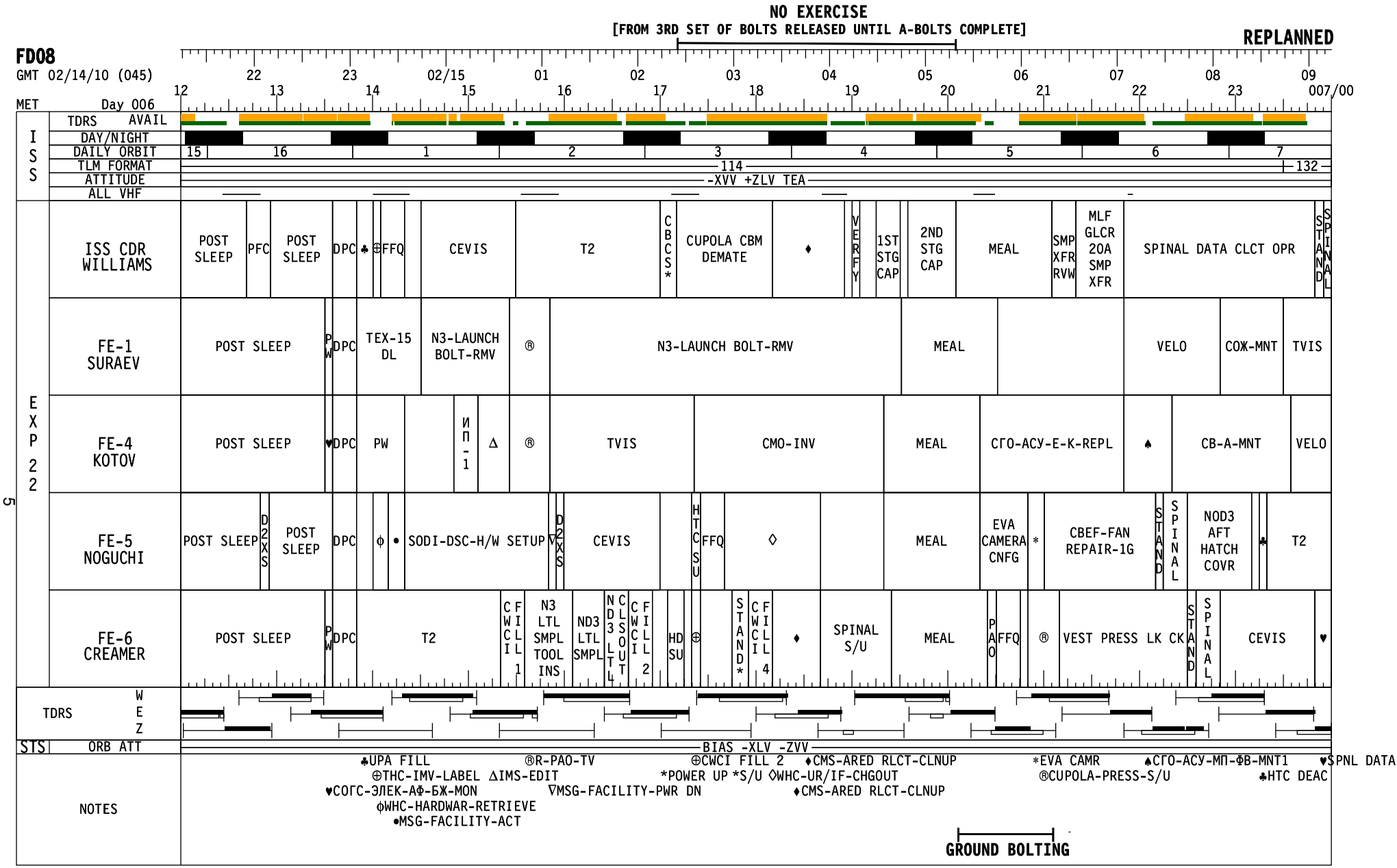
NO EXERCISE
[FROM 3RD SET OF BOLTS RELEASED UNTIL A-BOLTS COMPLETE]
REPLANNED
FD08
GMT 02/14/10 (045)
MET Day 006
12 13 14 15 16 17 18 19 20 21 22 23 007/00
22 23 02/15 01 02 03 04 05 06 07 08 09
ISS
TDRS AVAIL
DAY/NIGHT
DAILY ORBIT 15 16 1 2 3 4 5 6 7
TLM FORMAT 114 132
ATTITUDE -XVV +ZLV TEA
ALL VHF
EXP 22
ISS CDR WILLIAMS
POST SLEEP
PFC
POST SLEEP
DPC
♣
⊕
FFQ
CEVIS
T2
CBCS*
CUPOLA CBM DEMATE
♦
VERFY
1ST STG CAP
2ND STG CAP
MEAL
SMP XFR RVW
MLF GLCR 20A SMP XFR
SPINAL DATA CLCT OPR
STAND
SPINAL
FE-1 SURAEV
POST SLEEP
PW
DPC
TEX-15 DL
N3-LAUNCH BOLT-RMV
®
N3-LAUNCH BOLT-RMV
MEAL
VELO
COЖ-MNT
TVIS
FE-4 KOTOV
POST SLEEP
♥
DPC
PW
И П - 1
Δ
®
TVIS
CMO-INV
MEAL
СГО-АСУ-Е-К-REPL
♠
CB-A-MNT
VELO
FE-5 NOGUCHI
POST SLEEP
D2XS
POST SLEEP
DPC
ϕ
•
SODI-DSC-H/W SETUP
∇
D2XS
CEVIS
HTCSU
FFQ
◊
MEAL
EVA CAMERA CNFG
*
CBEF-FAN REPAIR-1G
STAND
SPINAL
NOD3 AFT HATCH COVR
♣
T2
FE-6 CREAMER
POST SLEEP
PW
DPC
T2
CWCI
FILL 1
N3 LTL SMPL TOOL INS
ND3 LTL SMPL
ND3 LTL CLSOUT
CWCI
FILL 2
HD SU
⊕
STAND*
CWCI
FILL 4
♦
SPINAL S/U
MEAL
PAO
FFQ
®
VEST PRESS LK CK
STAND
SPINAL
CEVIS
♥
TDRS W E Z
STS ORB ATT
BIAS -XLV -ZVV
NOTES
♣UPA FILL
®R-PAO-TV
⊕CWCI FILL 2
♦CMS-ARED RLCT-CLNUP
*EVA CAMR
♠СГО-АСУ-МП-ФВ-MNT1
♥SPNL DATA
⊕THC-IMV-LABEL
ΔIMS-EDIT
*POWER UP *S/U
◊WHC-UR/IF-CHGOUT
®CUPOLA-PRESS-S/U
♣HTC DEAC
♥СОГС-ЭЛЕК-АФ-БЖ-MON
∇MSG-FACILITY-PWR DN
♦CMS-ARED RLCT-CLNUP
ϕWHC-HARDWAR-RETRIEVE
•MSG-FACILITY-ACT
GROUND BOLTING

REPLANNED

FD08

GMT 02/15/10 (046)

MET Day 007

007/00 10 11 12 13 14 15 16 17 18 19 20 21 01 02 03 04 05 06 07 08 09 10 11 12

STS-130	CDR ZAMKA	XFER; OPS-FLTR CLN INSPECT; ILLUM-I; FDCONF; PMC A/G; PRE SLEEP	SLEEP
	PLT VIRTS	CUP VEST OUTFIT PT1; C&W PNL; PRE SLEEP; PAO; PRE SLEEP	ISS EXTERNAL SURVEY; SLEEP
	MS1 HIRE	CUP VEST OUTFIT PT1; CUPOLA FN LK CK INIT; PRE SLEEP	SLEEP
	MS2 ROBINSON	♣; XFER TAGUP; XFER BREEF; DPC; PRE SLEEP	SLEEP
	MS3 PATRICK	PRE; SLEEP; PMA3 GRPL; PRE SLEEP	SLEEP
	MS4 BEHNKEN	EXER; PMA3 GRPL; MDK CK; PRE SLEEP; PAO; PRE SLEEP	SLEEP
STS	DAY/NIGHT		
	ORBIT	111 112 113 114 115 116 117 118 119	
	TDRS W E Z		
	ORB ATT	BIAS -XLV -ZVV	
ISS	TDRS AVAIL		
	NOTES	♣N3 STBD MPEV INSTL	

REPLANNED

FD08

GMT 02/15/10 (046)

MET Day 007

007/00 10 01 11 02 12 03 13 04 14 05 15 06 16 07 17 08 18 09 19 10 20 11 21 12

ISS

- TDRS AVAIL
- DAY/NIGHT
- DAILY ORBIT: 7, 8, 9, 10, 11, 12, 13, 14, 15
- TLM FORMAT: 132, 112, 114, 112
- ATTITUDE: -XVV +ZLV TEA
- ALL VHF

EXP 22

ISS CDR WILLIAMS	SPINAL	SPINAL H/W STOW	PW	DPC	PW	PRE SLEEP-ISS	ISS EXTERNAL SURVEY / SLEEP
FE-1 SURAEV	TVIS			DPC	PW	PRE SLEEP-ISS	SLEEP
FE-4 KOTOV	VELO		3 SKT	DPC	PW	PRE SLEEP-ISS	SLEEP
FE-5 NOGUCHI	T2			DPC	♣ PW	PRE SLEEP-ISS	SLEEP
FE-6 CREAMER	⊕		HD SU	DPC	H A M PW ♦	P A O PRE SLEEP-ISS	SLEEP

TDRS W E Z

STS ORB ATT: BIAS -XLV -ZVV

NOTES

♣UPA FILL

⊕SPNL DATA CLCT OPR ♦PRE SLEEP-ISS

STS-130 FD08

GMT Date 02/14 (045) | W | TDRS E | Z | DON/ORB | MET Day 006 | STS ATI

CDR ZAMKA | PLT VIRTS | MS1 HIRE | Notes

12:00 — 13:00 — 14:00 — 15:00 — 16:00 — 22:00 — 23:00 — 00:00 — 01:00

DON/ORB: 103, 104, 105, 106

STS ATI: BIAS-XLV-ZVV

CDR ZAMKA

SLEEP LOGBOOK (ORB OPS, SDBI)
POST-SLEEP ACTIVITY
(ORB OPS, CREW SYS)

N2 REPRESS INIT [B]
CWC FILL (ORB OPS, CWC OPS)
Init Fill #3
Ref. MSG 027

EXERCISE

CWC FILL (ORB OPS, CWC OPS)
Perform FILL TERMINATION

CWC TRANSFER
Transfer CWC to ISS

PLT VIRTS

SLEEP LOGBOOK (ORB OPS, SDBI)
POST-SLEEP ACTIVITY
(ORB OPS, CREW SYS)

L9 PAYLOAD STATION AUDIO A/G (two) - OFF
NETMEETING VIDEO CONFERENCING
(ORB OPS, PGSC) Private Family Conference
KU TDRE (13:28-14:06) [A] Gimbal Flip:13:53

POST-SLEEP ACTIVITY
(ORB OPS, CREW SYS)

1.182 CUPOLA DEPRESSURIZATION(NODE 3 PORT) WITH NODE 3 PCA
(ASSY OPS, ACT&C/O)
Steps 1-6.3

SSRMS CONTINGENCY PROC REVIEW
Ref. MSG 104 & MSG 105

1.182 CUPOLA DEPRESS(N3 PORT) WITH N3 PCA
(ASSY OPS,ACT&C/O) Steps 6.5-7.3

MS1 HIRE

POST-SLEEP ACTIVITY
(ORB OPS, CREW SYS)

1.182 CUPOLA DEPRESSURIZATION(NODE 3 PORT) WITH NODE 3 PCA
(ASSY OPS, ACT&C/O)
Steps 1-6.3

SSRMS CONTINGENCY PROC REVIEW
Ref. MSG 104 & MSG 105

1.182 CUPOLA DEPRESS(N3 PORT) WITH N3 PCA
(ASSY OPS,ACT&C/O) Steps 6.5-7.3

1.178 20A CBCS INSTL/RMVL-CUPOLA INSTL
(ASSY OPS, ACT&C/O) Steps 1-5

FD08 EZ ACTIVITIES:
√OCAC FILTER & MDDK DUCT SCREEN
TEPC (STATUS CHECK)
(ORB OPS, CREW SYS)
HARD REBOOT ALL PGSCs EXCEPT:
STS-6(WLES),STS-5(RPOP2),&
OCA ROUTER.
Return all Shuttle IFM tools
used on ISS, per MSG 052, to
Endeavour prior to sleep.

[A] Omit steps 1.2 and 3
Use A/G 2 for audio
Inform MCC which PGSC will be used

[B] N2 REPRESS USING P/L N2 VLVS
(ORB OPS, ECLS) Steps 1-6;
MCC will TMBU S/W FDA in Step 1.
On MCC go, perform Step 7.
Work the ()s for all steps performed

STS-130 FD08

GMT Date 02/14 (045) | W | TDRS E | Z | DO/N | ORB | MET Day 006 | STS ATI

MS2 ROBINSON

12:00 — POST-SLEEP ACTIVITY (ORB OPS, CREW SYS)

13:00 — L9 PAYLOAD STATION AUDIO A/G (two) - OFF
NETMEETING VIDEO CONFERENCING (ORB OPS, PGSC) Private Family Conference KU TDRE (14:24-14:56) [A]
POST-SLEEP ACTIVITY (ORB OPS, CREW SYS)
TRANSFER UPDATE Ref. Transfer List & MSG 090

14:00 — EXERCISE

15:00 — EXERCISE

16:00

MS3 PATRICK

EVA CREW: TAKE 1 ASPIRIN (325mg)
SLEEP LOGBOOK (ORB OPS, SDBI)
POST-SLEEP ACTIVITY (ORB OPS, CREW SYS)

L9 PAYLOAD STATION AUDIO A/G (two) - OFF
NETMEETING VIDEO CONFERENCING (ORB OPS, PGSC) Private Family Conference KU TDRW (12:57-13:21) [A]
POST-SLEEP ACTIVITY (ORB OPS, CREW SYS)

[A] Omit steps 1.2 and 3
Use A/G 2 for audio
Inform MCC which PGSC will be used

EXERCISE

EVA 3 TOOL CONFIG (EVA, TIMELINES) Ref. MSG 102

MS4 BEHNKEN

EVA CREW: TAKE 1 ASPIRIN (325mg)
POST-SLEEP ACTIVITY (ORB OPS, CREW SYS)

GLACIER RECORD QUICK DIAGNOSTICS DATA (NOM) (ASSY OPS, P/L), page 705
EVA 3 TOOL CONFIG (EVA, TIMELINES) Ref. MSG 102

Notes

BIAS-XLV-ZVV

103 104 105 106

22:00 23:00 00:00 01:00

9

STS-130 FD08

GMT Date 02/15 (046) | W | TDRS E | TDRS Z | DO/N | ORB | MET Day 006 | STS ATI

MET	CDR ZAMKA	PLT VIRTS	MS1 HIRE	Notes
16:00	CWC TRANSFER Transfer CWC to ISS TV (ILLUMINATOR OPS) (PHOTO/TV, CC) ILLUMINATORS OFF - A & D IMU STAR OF OPPTY ALIGN (ORB OPS, GNC) N2 REPRESS TERM (On MCC GO) [C]	1.182 CUPOLA DEPRESSURIZATION(NODE 3 PORT) WITH NODE 3 PCA (ASSY OPS, ACT&C/O) Steps 7.5-end. Step 9, remove VAJ/ISA setup from NOD3 Port hatch MPEV when complete and temp stow VAJ/ISA setup for Urine/Potable bus vent ops.	1.178 20A CBCS INSTL/RMVL-CUPOLA INSTL (ASSY OPS, ACT&C/O) Steps 1-5 1.182 CUPOLA DEPRESSURIZATION(NODE 3 PORT) WITH NODE 3 PCA (ASSY OPS, ACT&C/O) Steps 7.5-end. Step 9, remove VAJ/ISA setup from NOD3 Port hatch MPEV when complete and temp stow VAJ/ISA setup for Urine/Potable bus vent ops.	
02:00	1.109 NODE1 & NODE3 POTABLE WATER BUS PRG AND VACUUM BACKFILL OF POTABLE WATER BUS (ASSY OPS, ACT&C/O) Steps 1-9.18 Step 5.7:use NOD3 PCA, skip step 5.9	ROBO: 1.410 SSRMS CUPOLA RELOCATE Steps 1-4	ROBO: 1.410 SSRMS CUPOLA RELOCATE Steps 1-4	
17:00		S&M:1.606 HTCH LTCH POSN TO HDSTP, N3 PORT	S&M: 1.539 CBM CUPOLA RELOCATE: NODE 3 PORT TO NODE 3 NADIR Step 1	
03:00	1.113 NODE 3 URINE BUS FILL (ASSY OPS, ACT&C/O) [C] N2 REPRESS USING P/L N2 VLVS (ORB OPS, ECLS) on MCC GO, perform Steps 8-13 MCC will TMBU S/W FDA in Step 13 Work the ()s for all steps performed	MEAL		
18:00	1.109 NODE1 & NODE3 POTABLE WATER BUS PRG AND VACUUM BACKFILL OF POTABLE WATER BUS (ASSY OPS, ACT&C/O) Steps 9.19-end Step 12:Temp stow ISA/VAJ setup for CUP repress. 35' VAJ can be stowed. Ref. MSG 088, Item 2 Ref. MSG 092	PUBLIC AFFAIRS EVENT ISS KU AVAIL: 18:05-18:46 Ref. MSG 098 ROBO: 1.410 SSRMS CUPOLA RELOCATE Steps 5-9 EXERCISE CONSTRAINT	PUBLIC AFFAIRS EVENT ISS KU AVAIL: 18:05-18:46 Ref. MSG 098 ROBO: 1.410 SSRMS CUPOLA RELOCATE Steps 5-9 EXERCISE CONSTRAINT	NO EXERCISE FROM 3RD SET OF BOLTS UNTIL A-BOLTS COMPLETE
04:00				
19:00		ROBO: 1.410 SSRMS CUPOLA RELOCATE Step 10 EXERCISE CONSTRAINT	S&M:1.539 CBM CUP RELO:N3 PORT/NAD Step 3 ROBO: 1.410 SSRMS CUPOLA RELOCATE Step 10 EXERCISE CONSTRAINT S&M: 1.539 CBM CUPOLA RELOCATE: NODE 3 PORT TO NODE 3 NADIR Steps 4.1-4.4 EXERCISE CONSTRAINT	
		ROBO: 1.410 SSRMS CUPOLA RELOCATE Step 11 EXERCISE CONSTRAINT	ROBO: 1.410 SSRMS CUPOLA RELOCATE Step 11 EXERCISE CONSTRAINT S&M: 1.539 CBM CUPOLA RELOCATE: NODE 3 PORT TO NODE 3 NADIR Steps 4.5-4.8 EXERCISE CONSTRAINT	
05:00	MEAL			
20:00				

BIAS-XLV-ZVV

106 107 108

10

REPLANNED

STS-130 FD08

GMT Date 02/15 (046) | W | T D R S E Z | D/N | O R B | MET Day 006 | STS ATI

MS2 ROBINSON | MS3 PATRICK | MS4 BEHNKEN | Notes

16:00

EXERCISE

EVA 3 TOOL CONFIG
(EVA, TIMELINES)
Ref. MSG 102

EVA 3 TOOL CONFIG
(EVA, TIMELINES)
Ref. MSG 102

EVA 3 TOOL CONFIG
(EVA, TIMELINES)
Ref. MSG 102

106

02:00

EVA TOOL AUDIT
Ref. EVA 3 TOOL CONFIG (EVA, TIMELINES)
Ref. MSG 102

EVA TOOL AUDIT
Ref. EVA 3 TOOL CONFIG (EVA, TIMELINES)
Ref. MSG 102

17:00

1.109 NODE1 & NODE3 POTABLE WATER BUS PRG AND VACUUM BACKFILL OF POTABLE WATER BUS
(ASSY OPS, ACT&C/O)
Steps 1-9.18
Step 5.7:use NOD3 PCA, skip step 5.9

GALLEY OVERNIGHT CONFIG (ORB OPS,ECLS)

EVA SYSTEMS: 1.305 EQUIPMENT LOCK PREP
Retrieve both WI1 Comm Cap (s/n 1199) & WI2 Comm Cap (s/n 1205) from WI ECOK in NOD1D2 and stow in E/Lk. Fill 2 Drink Bags with cold H2O(1 per EVA crew) In step 27,use Vacuum Manometer s/n 13.

EVA SYSTEMS: 1.305 EQUIPMENT LOCK PREP
Retrieve both WI1 Comm Cap (s/n 1199) & WI2 Comm Cap (s/n 1205) from WI ECOK in NOD1D2 and stow in E/Lk. Fill 2 Drink Bags with cold H2O(1 per EVA crew) In step 27,use Vacuum Manometer s/n 13.

107

03:00

1.113 NODE 3 URINE BUS FILL
(ASSY OPS, ACT&C/O)

18:00

√All EVA drink bag fills complete,THEN:
GALLEY MORNING CONFIG (ORB OPS,ECLS)

1.109 NODE1 & NODE3 POTABLE WATER BUS PRG AND VACUUM BACKFILL OF POTABLE WATER BUS
(ASSY OPS, ACT&C/O)
Steps 9.19-end
Step 12:Temp stow ISA/VAJ setup for CUP repress. 35' VAJ can be stowed.
Ref. MSG 088, Item 2
Ref. MSG 092

P/TV06 ROBOTICS OPERATIONS
(PHOTO/TV, SCENES)
Perform SETUP

P/TV06 ROBOTICS OPERATIONS
(PHOTO/TV, SCENES)

NO EXERCISE FROM 3RD SET OF BOLTS UNTIL A-BOLTS COMPLETE

04:00

19:00

108

MEAL

05:00

20:00

BIAS-XLV-ZVV

11

STS-130 FD08

GMT Date 02/15 (046) | W | TDRS E | TDRS Z | DO/N | ORB | MET Day 006 | STS ATI

109 | 110 | 111

BIAS -XLV -ZVV

CDR ZAMKA

MEAL

SHUTTLE CONDENSATE COLLECTION(ORB OPS,ECLS)
Perform CHANGEOUT. Use ISS CWC S/N 1070. Ask ISS crew for CWC location. Transfer Orbiter CWC S/N 5030 to NOD202 for processing. Notify MCC when complete.

TRANSFER OPS
Ref. Transfer List & MSG 090

D 1. Verify Node 3 Nadir Hatch Ratchet in LATCH Position.
2. Engage Crank Handle.
3. Turn Crank Handle in LATCH direction until fully latched.
4. Stow Crank Handle.

PLT VIRTS

ROBO: 1.410 SSRMS CUPOLA RELOCATE Step 12

1.126 NODE 3 ELPS ENABLE POWER SENSING
(ASSY OPS, ACT&C/O)

1.178 20A CBCS INSTL/RMVL-CUPOLA INSTL
(ASSY OPS, ACT&C/O) Steps 8-10

N3N HATCH LATCH D

1.144 NODE 3 AVIONICS RACKS OUTFITTING
(ASSY OPS, ACT&C/O)
Perform for NOD304 only.

EXERCISE

1.156 VESTIBULE OUTFITTING N3-CUPOLA
(ASSY OPS, ACT&C/O) Steps 1-5
Ref. MSG 093

MS1 HIRE

S&M: 1.539 CBM CUPOLA RELOCATE:
NODE 3 PORT TO NODE 3 NADIR
Steps 4.5-4.8 EXERCISE CONSTRAINT

ROBO: 1.410 SSRMS CUPOLA RELOCATE Step 12

MEAL

EXERCISE

1.118 NODE 3 STBD DECK NPRV RMVL & IMV VLV INSTL
(ASSY OPS, ACT&C/O)
Step 6

SPINAL STAND HEIGHT SUBJECT

SPINAL ELONG CREW DATA CLCT

1.156 VESTIBULE OUTFITTING N3-CUPOLA
(ASSY OPS, ACT&C/O) Steps 1-5
Ref. MSG 093

Notes

NO EXERCISE FROM 3RD SET OF BOLTS UNTIL A-BOLTS COMPLETE

REPLANNED

STS-130 FD08

GMT Date 02/15 (046) | W | T D R S E | Z | D/N | O R B | MET Day 006 | STS ATI

MS2 ROBINSON

MEAL

TRANSFER OPS
Ref. Transfer List & MSG 090

SPINAL STAND HEIGHT SUBJECT
SPINAL ELONG CREW DATA CLCT

TRANSFER OPS
Ref. Transfer List & MSG 090

1.156 VEST O/F N3-CUP(ASSYOPS,ACT&C/O)Stp1
1.122 NODE 3 PPRV REMOVAL & MPEV INSTL
(ASSY OPS, ACT&C/O)
Perform for Node 3 Nadir Hatch

1.122 NODE 3 PPRV REMOVAL & MPEV INSTL
(ASSY OPS, ACT&C/O)
Perform for Node 3 Stbd Hatch

MS3 PATRICK

P/TV06 ROBOTICS OPERATIONS
(PHOTO/TV, SCENES)

MEAL

P/TV09 GLACIER
(PHOTO/TV, SCENES)
Perform SETUP & OPS

20A CGBA SWAP - UNPOWERED
Ref. MSG 096 & MSG 103
Ref. Transfer List: Items 29,706

SPINAL STAND HEIGHT SUBJECT
SPINAL ELONG CREW DATA CLCT

MS4 BEHNKEN

MEAL

20A DESCENT SAMPLE TRANSFER FROM MELFI TO GLACIER
REVIEW ONLY and Ref. MSG 095

20A DESCENT SAMPLE TRANSFER FROM MELFI TO GLACIER
Ref. MSG 095
Ref. Transfer List: Item 721

EVA SYSTEMS: 1.605 BSA BATTERY RECHARGE
TERMINATE [E]

EMU METOX & BATTERY INSTALL [E]
Ref EVA SYS:1.515 EMU METX/LIOH/BAT REPLCE

EMU SWAP FOR EVA3: MOVE EMU 3004 to AFT EDDA, EMU 3018 to FWD EDDA

[E] Ref. STS-130 Consumables Tracking CC(EVA)
Ref. STS-130 Battery Recharge Plan (EVA)

SPINAL STAND HEIGHT SUBJECT
SPINAL ELONG CREW DATA CLCT

EXERCISE

Notes

NO EXERCISE FROM 3RD SET OF BOLTS UNTIL A-BOLTS COMPLETE

STS-130 FD08

GMT Date 02/15 (046) | W | T D R S E Z | D/N | O R B | MET Day 007 | STS ATI

CDR ZAMKA

00:00 TRANSFER OPS
Ref. Transfer List & MSG 090

FILTER CLEANING
(IFM, SCHEDULED MAINTENANCE)
Inspect filters and clean as necessary

01:00 TV (ILLUMINATOR OPS) (PHOTO/TV, CC)
ILLUMINATORS ON - A & D

FLIGHT DIRECTOR CONFERENCE

PRIVATE MEDICAL CONFERENCE

L9 PAYLOAD STATION A/G (two) - OFF
Perform via A/G2

PRE-SLEEP ACTIVITY
(ORB OPS, CREW SYS)

PLT VIRTS

1.156 VESTIBULE OUTFITTING N3-CUPOLA
(ASSY OPS, ACT&C/O) Steps 1-5
Ref. MSG 093

C&W PANEL COVER DEPLOY F

PRE-SLEEP ACTIVITY
(ORB OPS, CREW SYS)

PUBLIC AFFAIRS EVENT
ISS KU AVAIL: 01:38-02:17
Ref. MSG 097

PRE-SLEEP ACTIVITY
(ORB OPS, CREW SYS)

MS1 HIRE

1.156 VESTIBULE OUTFITTING N3-CUPOLA
(ASSY OPS, ACT&C/O) Steps 1-5
Ref. MSG 093

1.188 CUPOLA FINE LEAK CHECK ON NODE3 DECK
(ASSY OPS, ACT&C/O)
Steps 1-6.9
VAJ/ISA to remain mated to NOD2 Deck MPEV

PRE-SLEEP ACTIVITY
(ORB OPS, CREW SYS)

Notes

F C&W COVER PANEL DEPLOY
Install the C&W Panel Emergency Button Cover (Part #528-21469-1) on the Node 3 C&W panel and the COL Starboard C&W Panel. Replace the current Lab C&W panel shield with this new part also. The old Lab cover should be placed in a ziplock bag and the front of the bag labeled "P/N:UHW-CW,Part Name INC1C&W PANEL" for return.

BIAS-XLV-ZVV

10:00 11:00 12:00 13:00 04:00

111 112 113 114

CREW WAKE AT 07/12:00

REPLANNED

STS-130 FD08

GMT Date 02/15 (046) | W E | T D R S Z | D/N | O R B | MET Day 007 | STS ATI

MS2 ROBINSON | MS3 PATRICK | MS4 BEHNKEN | Notes

00:00

1.122 NODE 3 PPRV REMOVAL & MPEV INSTL
(ASSY OPS, ACT&C/O)
Perform for Node 3 Stbd Hatch

TRANSFER TAGUP
Coordinate with transfer counterpart

TRANSFER BRIEF
Call down status to MCC

10:00

01:00

DAILY PLANNING CONFERENCE

PRE-SLEEP ACTIVITY
(ORB OPS, CREW SYS)

11:00

02:00

BIAS-XLV-ZVV

12:00

03:00

13:00

04:00

111 112 113 114

PRE-SLEEP ACTIVITY
(ORB OPS, CREW SYS)

ROBO: 1.510 SSRMS CUPOLA RELEASE AND PMA3 RELOCATE
Steps 1-5

PRE-SLEEP ACTIVITY
(ORB OPS, CREW SYS)

EXERCISE

ROBO: 1.510 SSRMS CUPOLA RELEASE AND PMA3 RELOCATE
Steps 1-5

GLACIER STATUS CHECK (ASSY OPS,CC)

PRE-SLEEP ACTIVITY
(ORB OPS, CREW SYS)

PUBLIC AFFAIRS EVENT
ISS KU AVAIL: 01:38-02:17
Ref. MSG 097

PRE-SLEEP ACTIVITY
(ORB OPS, CREW SYS)

CREW WAKE AT 07/12:00

15

Good Morning Endeavour!!!!

Your EVA yesterday was awesome!!!! Congratulations on getting the lights turned on in Node 3! Node 3 is now open for business!!!!

Because of your excellent work in checking interferences, we are now comfortable with proceeding with cupola depress and relocate today!!! Thanks so much!!! (If you wish, you can see the technical details for this decision in the Daily Summary MSG 094)

Have a great cupola relocate day!!!!

YOUR CURRENT ORBIT IS: 188 X 181 NM

NOTAMS: NO CHANGE

EDW -	TEMP RWY IN USE. PERM RWY CLOSED FOR CONSTRUCTION.
EDW -	LAKEBED RWYS RED.
NOR -	LAKEBED RWYS USABLE. DRYING OUT.
WAL-	CLOSED.
ZZA -	ARRESTING NET INSTALLED 40M FROM END OF RWY 30L.
ESN -	RWY 03R/21L CLOSED. 03L/21R USABLE.
GUA -	RWY 06L/24R RWY END LIGHTS OUT OF SERVICE.
PTN -	CLOSED FOR RUNWAY CONSTRUCTION.
IKF -	NOT USABLE. NO AGREEMENT.
BEN -	NOT RECOMMENDED/NOT SUPPORTED.

NEXT 2 PLS OPPORTUNITIES:

EDT04L	ORB 110 – 6/22:15	FEW180	7	020/3P4
EDT22R	ORB 126 – 7/22:38	SKC	7	200/3P4

OMS TANK FAIL CAPABILITY:

L OMS FAILS: NO
R OMS FAILS: NO

LEAKING OMS PRPLT BURN:

L OMS LEAK: ALWAYS BURN RETROGRADE
R OMS LEAK: ALWAYS BURN RETROGRADE

OMS QUANTITIES(%)

L OMS	OX = 30.2	R OMS	OX = 31.4
	FU = 29.9		FU = 31.2

Subtract interconnect counter for current OMS quantities.

DELTA V AVAILABLE:

OMS	321 FPS
ARCS (TOTAL ABOVE QTY1)	44 FPS
TOTAL IN THE AFT	365 FPS
ARCS (TOTAL ABOVE QTY2)	77 FPS
FRCS (ABOVE QTY 1)	32 FPS
AFT QTY 1	82 %
AFT QTY 2	44 %

SYSTEM	FAILURE	IMPACT	WORK AROUND
EVA	During EVA2 PREP, Behnken reported no EMU CWS Audio Tones with his backup comm cap.	Behnken backup EVA comm cap was not used for EVA2.	Bob is using Patrick backup comm cap. Both of Williams' comm caps will be available for backup on EVA3.

Good morning Kay, Terry, & Steve,

You are still ahead of schedule on transfer overall, and now 56 percent complete! Today you have many hours of XFER OPS in store, so you can work on any unconstrained return items. If it makes it easier for you, we have outlined the open items that we think you can work on, and these are listed in your choreography below.

The Transfer List Excel file, FD08_Transfer_List_STS130.xls, is located on the KFX machine in **C:\OCA-up\transfer** (and available via the **PGSC homepage**).

For ISS, the Transfer List Excel file, FD08_Transfer_List_STS130.xls, is located in **K:\OCA-up\transfer**.

Change Pages
Please incorporate changes as follows:

In the Transfer List **RESUPPLY** tab
- Pen and Ink the following page:
  - Resupply – 6
    - For item 25: in the notes field, change “FD11” to “FD12”
- Replace the following page:
  - Resupply – 8
- Pen and Ink the following page:
  - Resupply – 14
    - For item 804: in the notes field, change “FD11” to “FD12”

In the Transfer List **RETURN** tab
- Pen and Ink the following page:
  - Return – 3
    - For item 702 & 704: in the notes field, change “FD11” to “FD12”
- Replace the following page:
  - Return – 5, 6, and 9

Questions for Kay
1. From our discussion in last night’s Transfer Brief, you were going to check on whether item 608 can be marked complete (this item is on Return page 2).
2. We understand Jeff did not create a CTB for his GSC sample collected on FD06. Please get an empty 1.0 CTB from NOD1D2 and record the CTB s/n (we will get this info from you at the Transfer Brief tonight). Place the CTB in MF57O. If the GSC is already in the locker, please wrap it in a towel or bubble wrap and stow it in the CTB. If it is not in the locker, we recommend you tag up with Jeff on its location. You can also complete item 718 by placing it into the same CTB.

FD08 Choreography
- TJ: Transfer Node 3 ITCS sample per N3-LTL-ITCS-SAMPLE activity (Item 740)
- Bob & Jeff: Transfer cold samples from ISS MELFI to shuttle Glacier per MLF GLCR 20A SMP XFR activity (Item 721)
- Nick: Transfer CGBAs per CGBA UNIT SWAP activity (Items 29 and 706)

- XFER OPS:
    - Return pages 1, 2, and 9 (all items on these pages)
    - Return page 6 (Items 723 and 725)
    - Return page 8 (Item 738)

Have a great day!

- The 20A Transfer Team

20A Transfer Choreography

<u>FD09 (no xfer brief)</u>

- Terry: Return old C&W panel per C&W PANEL COVER DEPLOY activity (Item 705)

<u>FD10</u>

- XFER OPS:
    - Transfer returning RFTA after Soichi's WRS-RFTA-R&R activity (Item 732)
    - After EVA3 A/L egress, transfer CSA-O2s (Items 707 and 708)

<u>FD11</u>

- XFER OPS:
    - Continue return transfers

<u>FD12</u>

- Jeff: Transfer returning blood sample per BLD STW activity (Item 704)
- TJ: Transfer returning saliva sample per SLV STW activity (Item 728)
- Steve: Transfer AFD PCS per AFT PCS XFER activity (Item 39)
- Steve: Transfer SSC back to ISS during SSC RETURN activity (Item 804)
- Bob: Transfer SAFER to shuttle per SAFER XFER activity (Item 714)
- Nick & Bob: Transfer EVA items to shuttle per EVA RECONFIG & XFER activity (Items 702, 712, 713, and 715)
- Soichi: Transfer returning RAMs to shuttle per RAM INSTALL activity (Item 726)
- Soichi: Transfer DCBs to shuttle per DCB-TRANSFER activity (Item 709 and 710)
- XFER OPS:
    - Complete water hardware transfers (Items 24, 25, 801, 729, and 735)
    - Transfer Return to Houston Imagery ziplock (Item 727)
    - Transfer remaining 5 MLE bags (Items 408 and 701)

<u>5 MLE Bag Plan (9 total)</u>

- Bags B & H: to Columbus for temp stow (as needed)
- Bag F: to Columbus permanently (return prepacked 5 MLE in its place)
- Bags C, D & E: remain on shuttle for unpacking/repacking
- Bag A: contains UPA DA, temp stow in JEM for FD04
- Bags G & I: handled via EVA procedures (G will be temp stowed in Node 1)

CHNG	☑	FD	Initials	Item #	Item Name	Qty	Initial Stowage	Temp Stowage	Stowage at Undock	Wt (lbs)	ACTIVITY / **Constraints** / **Comments
	☑	3		36	ECOK [Be]	1	Shuttle A/L Floor Bag (in Bag I)		ISS A/L	8.20	**Transfer on FD03 per POST DOCK EVA XFER activity.**
	☑	3		37	ECOK [Pk]	1	Shuttle A/L Floor Bag (in Bag I)		ISS A/L	7.20	**Transfer on FD03 per POST DOCK EVA XFER activity.**
				38	Entry Garments + Spare ACES gloves (2 pr)	1 mesh bag	Shuttle A/L Floor Bag (in Bag I)		Middeck Crew Preference	12.80	**Remove from Bag I and stow on the middeck for use on entry day. Do not transfer to ISS.**
X				39	AFD PCS [s/n 1032]	1		Shuttle Flight Deck deployed	NOD1S4_A1	6.50	**Transfer on FD12 ~~FD11~~ per AFT PCS XFER activity.** **Transfer laptop only.**
X				~~40~~	~~Shuttle MPC~~ ~~[s/n 1008]~~ Item Deleted	~~1~~		~~Shuttle Flight Deck deployed~~	~~LAB1OS4 installed~~	~~9.50~~	~~**Transfer on FD09.**~~ ~~**Swap with return item #720.**~~

CHNG	☑	FD	Initials	Item #	Item Name	Qty	Initial Stowage	Temp Stowage	Stowage at Undock	Wt (lbs)	ACTIVITY / **Constraints** / **Comments
	☑	5		716	Foam labeled "PFE"	1		COL1D2 (in Bag F)	MD FLOOR STBD 1 (in Bag C)	1.00	**Reference resupply item #6.3.
	☑	5		717	Foam labeled "NODE 3 QDM"	1		COL1D2 (in Bag F)	MD FLOOR STBD 1 (in Bag C)	1.00	**Reference resupply item #6.2.
				718	Food Warmer [s/n 1007]	1		MDDK (in Bag D)	MF57O (in CTB)	13.00	**Transfer after FD06.** **Swaps with resupply item 20.1.**
				719	GSC [s/n 1082] [in CTB]	1.0 CTB	in use		MF57O	5.10	**Transfer after EHS-GSC-OPS activity on FD06.**
X				~~720~~	~~Lab MPC~~ ~~[s/n 1004]~~ Item Deleted	~~1~~	~~LAB1OS4 installed~~		~~Shuttle Flight Deck deployed~~	~~9.50~~	~~**Transfer on FD09.**~~ ~~**Swap with resupply item #40.**~~
				721	MELFI Samples	-	MELFI		MF28E/G (in Glacier)	11.90	**Transfer on FD08 per MLF GLCR 20A SMP XFR activity.**
	☑	4		722	Multimeter [DOPEY]	1	NOD2 deployed (in Multimeter Kit)		MA16D (in Multimeter Kit)	1.40	**Swap with resupply item #1.** **Transfer multimeter only, leave kit and leads.**

CHNG	☑	FD	Initials	Item #	Item Name	Qty	Initial Stowage	Temp Stowage	Stowage at Undock	Wt (lbs)	ACTIVITY / **Constraints** / **Comments
				723	Pre-Treat Tank (E-K) [s/n 802025]	1.0 CTB		A/L Floor (strapped to Bag I)	MD CEIL STBD 1 (in Bag I)	5.84	**Don PPE - Tox 2 fluid. Verify PY-4, PY-5 connectors closed (position "3"). Verify PY-4 capped. Wrap Pretreat Tank and hose in bubble wrap to prevent damage to Hefty Bag during return. Bag Pretreat Tank and attached hose in Hefty Bag. Secure, tie open end of bag and grey tape. Place assembly into a 1.0 CTB (use empty CTB from NOD1D2).**
				725	PWR	1.0 CTB	MF14K		MD FLOOR STBD 1 (in Bag C)	5.50	**Only CTB and foam return in shuttle; the PWR that launched inside transferred to ISS. Reference resupply item #17.
X				726	Radiation Area Monitors	1 ziplock	ISS installed		MF57O (in CTB)	0.55	**Transfer on <u>FD12</u> ~~FD11~~ after RAM INSTALL activity.**
X				727	Return to Houston Imagery	1 ziplock	NOD2P4 (in 0.5 CTB s/n 1360)		MF14K (in item 403)	1.61	**Transfer on <u>FD12</u> ~~FD11.~~** **Tapes will continue to be added until after EVA3.
X				728	Saliva Sample Return Pouch	1	in use		MF57O (in CTB)	0.26	**Transfer on <u>FD12</u> ~~FD11~~ per SALIVA STOW activity.**
X				729	Silver Biocide Syringe Kit [s/n 1001]	1	NOD2O2 (in M-02 Bag s/n 1026)		MF57K	1.34	**Transfer on <u>FD12</u> ~~FD11~~ after final CWC fill.** **Swaps with return item 25.** **Use per water ops cue card, then transfer to shuttle.

CHNG	☑	FD	Initials	Item #	Item Name	Qty	Initial Stowage	Temp Stowage	Stowage at Undock	Wt (lbs)	ACTIVITY / **Constraints** / **Comments
			Return Realtime Additions								
X				901	EMU Power Harness Assy. [s/n 1042]	1	ISS A/L (in EVA Task Xfer Bag)		MD FLOOR STBD 2 (in Bag G)	0.50	**Remove from mesh bag and wrap with towels, foam or bubble wrap. Bend radius should not be smaller than 6 inches.**

FD 8 Crew Choice Times

TDRS	AOS	LOS	Delta (min)	Notes
W-171	7/01:48	7/02:20	32	
E-275	7/03:15	7/03:25	10	Gimbal flip at 7/03:23; Analog only

Note: Please notify MCC-H 10 minutes prior to the event to allow for ground network configuration.

END OF PAGE 1 OF 1, MSG 091

Contents:

Timeline Procedures:

**CUPOLA DEPRESS PART1
**CUPOLA DEPRESS PART2
**CUPOLA DEPRESS PART3
**CBCS MOVE N3N N3P
**CBCS SETUP
SODI-DSC-H/W SETUP
CUPOLA-PRESS-CK
CUPOLA-PRESS-S/U
CUPOLA-PRESS
**CUPOLA FN LK CK INIT
WHC HARDWARE RETRIEVE
N3-LAUNCH BOLT-RMV
**N3 URIN/POT BUS VENT
**N3 POT BUS VENT/FILL
N3-LTL-SMPL TOOL INS
N3-LTL ITCS-CLOSEOUT
WRS-UPA-FILL
N3-LTL ITCS-SAMPLE
**N3 URINE BUS FILL
**NOD3 ELPS ENABLE
SPINAL-H/W-SETUP
SPINAL-STND-HT-S/U
SPINAL-DATA-CLCT-OPR
SPINAL-DATA-COLLECT
SPINAL-STND-HT-CLCT
SPINAL-H/W-STOW
**N3 NAD MPEV INSTL
** N3 STBD MPEV INSTL
P/TV-EVA CAMR-CONFG
MLF-GLCR-20A-SMP XFR
WRS-CWCI-FILL-PT1
WRS-CWCI-FILL-PT2
** NOD3O4 RACK OUTFIT
WHC-UR/IF-CHGOUT

ESA Timeline Procedures:
FSL-HANDLE-RPAR
FSL-VMU HW-UPDATE S1

JAXA Timeline Procedures:
CBEF-FAN REPAIR-1G

Tasklist Procedures:
BCAT3-CRYSTAL-CHECK
WHC-KTO-REPLACE
WHC-ЕДВ-У-R&R
PWD-BEV ADPTR-R&R

JAXA Tasklist Procedures:
None

ESA Tasklist Procedures:
None

Timeline Procedures:

****CUPOLA DEPRESS PART1 **CUPOLA DEPRESS PART2 **CUPOLA DEPRESS PART3**						
1.172 Cupola Depressurization (Node 3 Port)						
Type: Standard						
#	**LOCATION**	**ITEM NAME**	**P/N**	**S/N**	**B/C**	**Notes**
1	**Temp stowed NOD3 from NOD1/NOD3 vestibule leak check**	MPEV Internal Sampling Adapter (ISA)	97M55830-1	2	000002M	
2		Scopemeter Pressure Probe	SEG39130244-302	-	004461J	Installed on ISA
3		VAJ-78-1 5ft	683-17111-1	-	00002677J	
4		Multimeter Kit	10118-10018-04	1017	-	
5		Multimeter	87	1010	00088636J	Happy

Type: Restow						
6	**Leave connected to NOD3 Port Hatch MPEV for FD8 CUP pressure check**	MPEV Internal Sampling Adapter (ISA)	97M55830-1	2	000002M	
7		Scopemeter Pressure Probe	SEG39130244-302	-	004461J	Installed on ISA
8		VAJ-78-1 5ft	683-17111-1	-	00002677J	
9		Multimeter Kit	10118-10018-04	1017	-	
10		Multimeter	87	1010	00088636J	Happy

1
2

****CBCS MOVE N3N N3P** ****CBCS SETUP**						
1.403 CBCS INSTALLATION/REMOVAL - GENERIC						
Type: Standard						
#	**LOCATION**	**ITEM NAME**	**P/N**	**S/N**	**B/C**	**Notes**
1	**Temp stowed at N1 Port Hatch from FD 5**	CBCS Camera Assembly	SEG33112576-301	-	-	

3

SODI-DSC-H/W SETUP						
2.006 DSC EXPERIMENT SETUP						
Type: Standard						
#	**LOCATION**	**ITEM NAME**	**P/N**	**S/N**	**B/C**	**Notes**
1	**ToolSet “Jeff” or “TV”**	Ratchet, 1/4" Drive	T936	-	-	
2		Driver Handle, 1/4" Drive	TM4B	-	-	
3		Static Wrist Tether	WS-AM6-4MM	-	-	
4	**NOD1D4**	5 mm Hex Head, 1/4" Drive	SKG33117562-615	-	-	
5	**ТГК404ГрО_2_2** Cargo Bay Zone 2 Plain 2	DSC Cell Array Stowage Bag 1	SODI-01-1515-1000-000-VE	-	00SOD100M	(Blue Container lined with foam labeled "KEEP WITH HARDWARE.")

6	**COL1_STBD_ Endcone** 3.0 CTB, S/N 1068, B/C 004253J	DSC Flash Disk Stowage Bag	SODI-01-1524-1000-000-VE	-	01SOD100M	

CUPOLA-PRESS-CK
CUPOLA-PRESS-S/U
CUPOLA-PRESS
****CUPOLA FN LK CK INIT**

1.172 CUPOLA DEPRESSURIZATION (NODE 3 PORT)
1.174 CUPOLA PRESSURIZATION AND LEAK CHECK
1.188 CUPOLA FINE LEAK CHECK ON NODE 3 DECK

Type: Standard

#	LOCATION	ITEM NAME	P/N	S/N	B/C	Notes
1	**Temp Stow NOD3**	MPEV Internal Sampling Adapter	97M55830-1	2	000002M	
2		Scopemeter Pressure Probe	SEG39130244-302	-	004461J	
3		VAJ-83-1 35ft	683-17111-2	-	00002676J	
4		VAJ-78-1 5ft	683-17111-1	-	00002677J	
5		Multimeter Kit	10118-10018-04	1017	-	
6		Multimeter	87	1010	00088636J	“Happy”
7	**Pregathered Toolset “Jeff” or “TV”**	Ratchet, 1/4" Drive	-	-	-	
8		5/32" Hex Head, 1/4" Drive	-	-	-	

WHC HARDWARE RETRIEVE						
Type: Standard						
#	**LOCATION**	**ITEM NAME**	**P/N**	**S/N**	**B/C**	**Notes**
1	**LAB1P2**	Urine Filter Hose	10523.6728.00.020	704003	00100237J	Behind panel WHC-03 taped to Wring Collector (COT). Transfer to NOD3F4
2	**LAB1S1**	ЕДВ Крышка (EDV Lid)	11Ф615.8711-180A15-1	910	00098602R	Transfer to NOD3F4
3		ЕДВ Корпус (EDV Bucket)	11Ф615.8711-120A15-1	474	00050804R	
Type: Restow						
4	**NOD3F4**	ЕДВ Крышка (EDV Lid)	11Ф615.8711-180A15-1	910	00098602R	Temp stow EDV and hose for N3 Urine Bus Fill task.
5		ЕДВ Корпус (EDV Bucket)	11Ф615.8711-120A15-1	474	00050804R	
6		Urine Filter Hose	10523.6728.00.020	704003	00100237J	

N3-LAUNCH BOLT-RMV						
1.138 NODE 3 LAUNCH RESTRAINT BOLTS REMOVAL						
Type: Standard						
#	**LOCATION**	**ITEM NAME**	**P/N**	**S/N**	**B/C**	**Notes**
1	**NOD1D4_B2** 0.5 CTB, S/N 1175, B/C 006624J	Driver Drill Kit	SJG33109829-301	-	003422J	
2	**NOD1D4**	Hex Shank, 1/4" Drive	SKG33117562-008	-	-	
3	**Pregathered Toolset "Jeff" or "TV"**	5/32" Hex Head, 1/4" Drive	SKG33117562-742	-	-	
4		3/16" Hex Head, 1/4" Drive	SKG33117562-743	-	-	
5		Driver Handle, 1/4" Drive	SKG33117562-941	-	-	

Type: Restow						
6	**NOD1P2** 3.0 CTB: Node 3 Vestibule Outfitting kit (VOK), S/N 1048, B/C 004233J	0.5 CTB: NOD3 Uninstalled Hardware	SEG33111836-303	1065	003947J	
7		Ziplock Bag	-	-	-	
8		Launch Restraint Bolts	-	-	-	

****N3 URIN/POT BUS VENT** ****N3 POT BUS VENT/FILL**						
1.109 NODE 1 AND NODE 3 POTABLE WATER AND URINE BUS PURGE WITH VACUUM BACKFILL OF POTABLE WATER BUS						
Type: Standard						
#	**LOCATION**	**ITEM NAME**	**P/N**	**S/N**	**B/C**	**Notes**
1	**NOD3F1** 2.0 CTB: INSTALLATION HW 2, S/N 1045, B/C 004179J	Potable Water Purge/Fill Adapter	683-64435-1	000001	00060128H	
2	**LAB1P4**	Ziplock	-	-	-	
3		Ziplock: “Yellow/Yellow Hose - QD Removed on GMT XXX”	-	-	-	
4		R/Y QD Adapter	10108-20175-01	5008	-	You can get this adapter from TJ, who will be using it for his CWC-I fill activity in the Lab.
5	**JLP1F1**	CWC-Iodine	SEG33120607-303	2009	00107911J	Use CWC-I PWR with R-Y adapter in place of a PWR.

6	**Temp Stow NOD3**	MPEV Internal Sampling Adapter	97M55830-1	2	000002M	
7		Scopemeter Pressure Probe	SEG39130244-302	-	004461J	
8		VAJ-78-1 5ft	683-17111-1	-	00002677J	
9		VAJ-83-1 35 ft	683-17111-2	-	00002676J	
10		Multimeter Kit	10118-10018-04	1017	-	
11		Multimeter	87	1010	00088636J	“Happy”
12	**NOD1D4**	(10-50 in-lbs) Trq Wrench 1/4" Drive	-	-	-	
13		Flex Handle Ratchet, 3/8" Drive	-	-	-	
14		1 5/8" Crowfoot, 3/8" Drive	-	-	-	
15		1 1/4" Crowfoot, 3/8" Drive	-	-	-	
16	**Pregathered Toolset “Jeff” or “TV”**	1/4" to 3/8" Adapter	-	-	-	
17		Ratchet, 3/8" Drive	-	-	-	
Type: Restow						
18	**LAB1D5** 0.5 CTB: WRS Caps&Plugs Potable Water Refill Purge Adaper, S/N 1379, B/C CTB00284J	Potable Water Purge/Fill Adapter	683-64435-1	000001	00060128H	

N3-LTL-SMPL TOOL INS **N3-LTL ITCS-CLOSEOUT**						
1.130 NODE 3 ITCS SAMPLING ADAPTER INSTALLATION - LTL (NOD3D6)						
Type: Standard						
#	**LOCATION**	**ITEM NAME**	**P/N**	**S/N**	**B/C**	**Notes**
1	**NOD3F1** 2.0 CTB: INSTALLATION HW 2, S/N 1045, B/C 004179J	ITCS Coolant Sampling Adapter	683-56147-14	Any	Any	**Report S/N and B/C to MCC-H**
2		ITCS Coolant Sampling Adapter Mitten	5561ND001-415	-	-	
3		ITCS Coolant Sampling Adapter Mitten	5561ND001-413	-	-	
4	**NOD1D4**	(10-50 in-lbs) Trq Wrench, 1/4" Drive	SEG33112395-301	M206422	-	
5	**Pregathered Toolset "Jeff" or "TV"**	5/32" Hex Head, 1/4" Drive	TMA5E	-	-	
6		Ratchet, 1/4" Drive	SKG33117562-939	-	-	
Type: Restow						
7	**Temp Stow Near ITCS QD Mounting Bracket.**	"Ziplock": NOD3D6 Insulation and ITCS Coolant Sampling Adapter Cap, Plug, & Spacer."	-	-	-	
8		TCS LTL SPLY TO HX Insulation	-	-	-	
9		TCS Coolant Sampling Adapter Cap	-	-	-	
10		TCS Coolant Sampling Adapter Plug	-	-	-	
11		TCS Coolant Sampling Adapter Adapter	-	-	-	

WRS-UPA-FILL						
21-0223 1.904 UPA ACTIVATION						
Type: Standard						
#	**LOCATION**	**ITEM NAME**	**P/N**	**S/N**	**B/C**	**Notes**
1	**LAB1P2** 0.5 CTB, S/N 1221, B/C 010402J	Regen ECLSS Tox-2 PPE Kit	SEG42103702-302	1002	CHCCPK02J	
2		Safety Goggles	503R	-	-	
3		Mess-Up Mitts	RMUM-12	-	-	
4		Silver Shield Gloves	SS104M	-	-	
5		Surgical Masks	8210	-	-	

N3-LTL ITCS-SAMPLE						
1.1.601 ITCS FLUID SAMPLING - GENERIC						
Type: Standard						
#	**LOCATION**	**ITEM NAME**	**P/N**	**S/N**	**B/C**	**Notes**
1	**LAB1S5_D1** 1.0 CTB: ITCS Sampling Hardware, S/N 1376, B/C CTB00042J	ITCS Coolant Quality Monitoring Kit	SEG46118274-305	1004	00096080J	This CQMK is labeled "ULF2"
2		Port Flush Bag	SEG46118252-302	-	Any	**Report B/C to MCC-H**
3		Fluid Sample Bag	SEG46118249-302	-	Any	**Report B/C to MCC-H**
4		ITCS Sample Return Ziplock Bag Assy	SEG46118278-701	Any	Any	**Report S/N to MCC-H**
Type: Restow						
5	**Transfer List Return Item #740**	ITCS Sample Return Ziplock Bag Assy	SEG46118278-701	Any	-	
6		Fluid Sample Bag	SEG46118249-302	-	-	

****N3 URINE BUS FILL**						
1.113 N3 URINE JUMPER FILL						
Type: Standard						
#	**LOCATION**	**ITEM NAME**	**P/N**	**S/N**	**B/C**	**Notes**
1	**LAB1P2** 0.5 CTB, S/N 1221, B/C 010402J	Regen ECLSS Tox-2 PPE Kit	SEG42103702-302	1002	CHCCPK02J	
2		Safety Goggles	503R	-	-	
3		Mess-Up Mitts	RMUM-12	-	-	
4		Silver Shield Gloves	SS104M	-	-	
5		Surgical Masks	8210	-	-	
6	**Temp Stowed at NOD3F4**	Ziplock	-	-	-	Moved to NOD3 during WHC HARDWARE RETRIEVE Task
7		Ziplock	-	-	-	
8		Urine Filter Hose	10523.6728.00.020	704003	00100237J	
9	**NOD3F4**	ЕДВ Крышка (EDV Lid)	11Ф615.8711-180A15-1	910	00098602R	
10		ЕДВ Корпус (EDV Bucket)	11Ф615.8711-120A15-1	474	00050804R	
Type: Restow						
11	**LAB1S1**	ЕДВ Крышка (EDV Lid)	11Ф615.8711-180A15-1	910	00098602R	
12		ЕДВ Корпус (EDV Bucket)	11Ф615.8711-120A15-1	474	00050804R	
13	**NOD1S1** Jettison Stowage Bag: “WHC Trash Items”	Urine Filter Hose	10523.6728.00.020	704003	00100237J	

****NOD3 ELPS ENABLE**						
1.126 NODE 3 ELPS ENABLE POWER SENSING						
Type: Standard						
#	**LOCATION**	**ITEM NAME**	**P/N**	**S/N**	**B/C**	**Notes**
1	**Pregathered Toolset "Jeff" or "TV"**	5/32" Hex Head, 1/4" Drive	SKG33117562-742	-	-	
2		Driver Handle, 1/4" Drive	SKG33117562-941	-	-	

SPINAL-H/W-SETUP **SPINAL-STND-HT-S/U** **SPINAL-DATA-CLCT-OPR** **SPINAL-DATA-COLLECT** **SPINAL-STND-HT-CLCT** **SPINAL-H/W-STOW**						
Spinal Elongation Operator Procedure						
Type: Standard						
#	**LOCATION**	**ITEM NAME**	**P/N**	**S/N**	**B/C**	**Notes**
1	**JPM1F6_B1**	Spinal Elongation Kit	SJG46121776-301	1004	HRF09342J	Kit is to be restowed in original ISS location.

****N3 NAD MPEV INSTL** **** N3 STBD MPEV INSTL**						
1.122 NODE 3 PPRV REMOVAL AND MPEV INSTALLATION						
Type: Standard						
#	**LOCATION**	**ITEM NAME**	**P/N**	**S/N**	**B/C**	**Notes**
1	**LAB1D5** 1.0 CTB: 20A Pregather #1, S/N 1263, B/C 010599J	Braycote	601	-	-	
2	**NOD1D4**	(40-200 in-lb) Trq Wrench, 1/4" Drive	SEG33112394-301	M206421	-	

3	**Pregathered Toolset "Jeff" or "TV"**	5/32" Hex Head, 1/4" Drive	SKG33117562-742	-	-	
4		Ratchet, 1/4" Drive	SKG33117562-939	-	-	
5		4" Ext, 1/4" Drive	SKG33117562-764	-	-	
Type: Restow						
6	**NOD1P2** 3.0 CTB: Node 3 Vestibule Outfitting kit (VOK), S/N 1048, B/C 004233J	0.5 CTB: NOD3 Uninstalled Hardware	SEG33111836-303	1065	003947J	
7		PPRV [QTY: 2]	683-16321-11	**Any**	**Any**	**Report** S/N and B/C **to MCC-H**

P/TV-EVA CAMR-CONFG						
3.701 D2Xs EVA CAMERA						
Type: Standard						
#	**LOCATION**	**ITEM NAME**	**P/N**	**S/N**	**B/C**	**Notes**
1	**NOD1P4_A1** 1.0 CTB: EVA CAMERA ACCESSORIES, S/N 1221, B/C 006717J	Camera Mtg Assy Thermal Blanket	SED33117417-301	Any	-	**Report S/N to MCC-H** Labeled as "Thermal Blanket, Camera Mtg Assy"
2		Camera Mounting Assy	SED33113695-302	-	-	Installed on Thermal Blanket.
3		EVA Camera Blanket	SEZ33120543-301	Any	-	**Report S/N to MCC-H**
4		28mm, 35mm, 50mm, Lens Cap	SEZ33113449-303	-	-	
5		EVA Camera Eyepiece	SEZ33120546-301	Any	-	**Report S/N to MCC-H**
6		28mm EVA Lens	SED33105019-301	Any	-	**Report S/N to MCC-H**

1

MLF-GLCR-20A-SMP XFR						
DESCENT SAMPLE TRANSFER FROM MELFI TO GLACIER						
Type: Standard						
#	**LOCATION**	**ITEM NAME**	**P/N**	**S/N**	**B/C**	**Notes**
1	**IFM Tools MA16D**	4" Ext, 1/4" Drive	-	-	-	
2		1/4" TO 3/8" ADAPTER (1/4" Drive)	-	-	-	
3		Ratchet, 1/4" Drive	-	-	-	
4		3/16" Hex Head, 3/8" Drive	SKG33117562-746	-	-	
5		(40-200 in-lbs) Trq Wrench, 1/4" Drive	SEG33112394-301	M206421	-	
6	**JPM1F7** (drying location)	Double Coldbag	SEG39136374-301	1006	00050400J	
7		Icepac Belt -21°C [QTY:2]	SEG33118113-307	-	00050441J	
8				-	00050443J	
9	**LAB1S2_Rack Front (MELFI-2)**	LtWt Cryo Gloves, (a.k.a. Mechanix Wear)	SEG32109404-30X	-	-	
10	**JPM1D4 (MELFI-1)** Dewar 3, Tray D, Section 3	Icepac Belt -21°C	SEG33118113-307	-	-	**REPORT B/C#** of of Icepac retrieved from this location to POIC
11	**JPM1D4 (MELFI-1)** Dewar 2, Tray B, Section 4	Vial Bags [QTY:2] (HRP Blood)	03218	-	-	
12	**JPM1D4 (MELFI-1)** Dewar 2, Tray D, Section 2	Vial Bags [QTY:4] (HRP Blood)	03218	-	-	
13		3X5 Mesh Bag (HRP Urine)	SEG33121012-301	-	-	
14	**JPM1D4 (MELFI-1)** Dewar 2, Tray A, Section 1	Vial Bags [QTY:4] (HRP Blood)	03218	-	-	
15	**JPM1D4 (MELFI-1)**	Vial Bag (HRP Blood)	03218	-	-	

	Dewar 2, Tray A, Section 2/3					
16	**JPM1D4 (MELFI-1)** Dewar 3, Tray D, Section 4	Icepac Belt -21°C	SEG33118113-307	-	00050447J	
17	**LAB1S2 (MELFI-2)** Dewar 2, Tray A, Section 3/4	APEX-Cambium KFT [Qty:5]	-	-	-	
18	**LAB1S2 (MELFI-2)** Dewar 2, Tray C, Section 3/4	CERISE Large Bag [QTY:2] (JAXA CERISE)	LSE-ZIP006V-CER	001 002	CBES0561N CBES0562N	
19		Clear Plate	MCMFM37115	001 002	CBES51N CBES52N	Stowed in Large Bag one each
20		Meas Exp Culture Bag Holder	MCMFM37100	012 010	CBES0503N CBES0501N	Stowed in Large Bag one each
21	**LAB1S2 (MELFI-2)** Dewar 2, Tray D, Section 3/4	CERISE Large Bag [QTY:2] (JAXA CERISE)	LSE-ZIP006V-CER	003 004	CBES0563N CBES0564N	
22		Clear Plate	MCMFM37115	003 004	CBES53N CBES54N	Stowed in Large Bag one each
23		Meas Exp Culture Bag Holder	MCMFM37100	013 011	CBES0504N CBES0502N	Stowed in Large Bag one each
Type: Restow						
24	**MF28E/G** Glacier Tray A	CERISE Large Bag [QTY:2] (JAXA CERISE)	LSE-ZIP006V-CER	001 002	CBES0561N CBES0562N	Contains a Clear Plate and a Meas Exp Culture Bag Holder each Transfer List Return Item #721
25	**MF28E/G** Glacier Tray B	CERISE Large Bag [QTY:2] (JAXA CERISE)	LSE-ZIP006V-CER	003 004	CBES0563N CBES0564N	Contains a Clear Plate and a Meas Exp Culture Bag Holder each Transfer List Return Item #721

26	**MF28E/G** Glacier Tray C	APEX-Cambium KFT [Qty:5]	-	-	-	Transfer List Return Item #721
27	**MF28E/G** Glacier Tray D	Vial Bags [Qty:11] (containing HRP blood samples)	03218	-	-	Transfer List Return Item #721
28		3X5 Mesh Bag (HRP Urine)	SEG33121012-301	-	-	
29	**Drying Location**	Double Coldbag	SEG39136374-301	1006	00050400J	**REPORT drying location to POIC**
30		Icepac Belt -21°C	SEG33118113-307	-	-	**REPORT** B/C# of this icebelt, Item#10
31		Icepac Belt -21°C	SEG33118113-307	-	00050447J	
32	**JPM1F5_L1**	Icepac Belt -21°C	SEG33118113-307	-	00050441J	
33		Icepac Belt -21°C	SEG33118113-307	-	00050443J	

WRS-CWCI-FILL-PT1 **WRS-CWCI-FILL-PT2**						
20-0021 2.913 CWC - Iodine Fill from WPA with WPA H2O Transfer Common Hose						
Type: Standard						
#	**LOCATION**	**ITEM NAME**	**P/N**	**S/N**	**B/C**	**Notes**
1	**NOD2O2** Mesh Bag	CWC-Iodine	SEG33120607-301	2018	00107930J	
2		CWC-Iodine	SEG33120607-301	2019	00107931J	
3	**LAB1O3**	WPA H2O Transfer Common Hose	SEG33119491-302	1004	00073323J	
4	**LAB1P4**	Ziplock	-	-	-	
5		Ziplock: “Yellow/Yellow Hose - QD Removed on GMT XXX”	-	-	-	
6		R/Y QD Adapter	10108-20175-01	5008	-	
Tpe: Restow						
7	**JLP1F1**	CWC-Iodine	SEG33120607-301	2018	00107930J	
8		CWC-Iodine	SEG33120607-301	2019	00107931J	

** NOD3O4 RACK OUTFIT						
1.144 Node 3 Avionics Racks Outfitting						
Type: Standard						
#	**LOCATION**	**ITEM NAME**	**P/N**	**S/N**	**B/C**	**Notes**
1	**LAB1D5** 1.0 CTB: 20A Pregather #1, S/N 1263, B/C 010599J	ARIS - Pivot Fitting Bottom Left	683-61711-31	1030	-	
2		ARIS - Pivot Fitting Bottom Right	683-61711-32	2025	-	
3		K-BAR Assy, Left	683-62201-33	002011	BOE00096J	
4		K-BAR Assy, Right	683-62201-34	002010	BOE00101J	
5	**Pregathered Toolset Labeled "Jeff" or "TV"**	Ratchet, 3/8" Drive	-	-	-	
6		5/32" Hex Head, 1/4" Drive	-	-	-	
7		Static Wrist Tether	-	-	-	
8	**NOD1D4**	(40-200 in-lbs) Trq Wrench, 3/8" Drive	-	-	-	
9		5/32" Hex Head, 3/8" Drive	-	-	-	
10		6" Long, 3/8" Hex Head, 3/8" Drive	-	-	-	
11		5" Long, 3/8" Ball Tip Hex Head, 3/8" Drive	-	-	-	
12		Speed Handle Assy	-	-	-	
Type: Restow						
13	**NOD1P2** 3.0 CTB: Node 3 Vestibule Outfitting kit (VOK), S/N 1048, B/C 004233J	0.5 CTB: NOD3 Uninstalled Hardware	SEG33111836-303	1065	003947J	
14		Knee Brace	683-50249-3	**Any**	**Any**	**REPORT** S/Ns to **MCC-H**

WHC-UR/IF-CHGOUT						
2.306 WHC URINE HOSE R&R						
Type: Standard						
#	**LOCATION**	**ITEM NAME**	**P/N**	**S/N**	**B/C**	**Notes**
1	**JLP1P2_B2**	Urine Receptacle (Urine Hose)	A8-9060-800-04	**Any**	**Any**	**REPORT S/Ns and B/Cs to MCC-H**
2		Insert Filter (Φ-B)	10182.5514.000	**Any**	**Any**	
3	**LAB1P2** Regen ECLSS Tox-2 PPE Kit	Silver Shield Gloves	-	-	-	
4		Surgical Mask	-	-	-	
5		Safety Goggles	-	-	-	
6	**LAB1D5** 1.0 CTB: 20A Pregather #1, S/N 1263, B/C 010599J	Braycote	-	-	-	
7	**Pregathered Toolset Labeled "Jeff" or "TV"**	Wire Cutters	-	-	-	
Type: Restow						
8	**NOD1S1** JSB: WHC Trash Items	24"x 24" Ziplock Bag for disposal	-	-	-	
9		Urine Receptacle (Urine Hose)	A8-9060-800-04	**Any**	**Any**	**REPORT S/Ns and B/Cs to MCC-H**
10		Insert Filter (Φ-B)	10182.5514.000	**Any**	**Any**	
10		Urine Receptacle (Urine Hose)	A8-9060-800-04	**Any**	**Any**	**REPORT S/Ns and B/Cs to MCC-H**
11		Insert Filter (Φ-B)	10182.5514.000	**Any**	**Any**	

ESA Timeline Procedures:

FSL-HANDLE-RPAR						
4.345 FSL CEM-LOWER LEFT DRAWER HANDLE TROUBLESHOOTING						
Type: Standard						
#	**LOCATION**	**ITEM NAME**	**P/N**	**S/N**	**B/C**	**Notes**
1	**Retrieve from Oleg** 0.5 CTB: ESA-7-0.5 CTB	FCE Drawer Handle	FSL-1-100-1010-000-VE	-	FSL00071E	Ref. 36P Unpack item #76.3
2	**COL1F3** Columbus Tool Kit #1	Torque Wrench 4-20 Nm	730/2-50180002	-	00000754E	
3	**COL1F3** Columbus Tool Kit #2	Flex Handle Ratchet, 1/4" Drive	TM831	-	00000760E	
4		Ratchet Wrench 3/8”	435-12110010	-	00000912E	
5		2” Extension 1/4" Drive	405/2-11010001	-	-	
6	**COL1F3** Columbus Tool Kit #3	M4 (3 mm) Hex Head Driver 1/4" Drive	44-01050003	-	-	Use 1/8” Hex Head, 1/4" Drive if 3 mm not available.
7		Ratchet Tool 3/8” Drive	735/5-58250005	-	00000888E	
8	**NOD1D4**	1/8” Hex Head, 1/4" Drive	SKG33117562-740	-	-	
9		8 mm Hex Head, 3/8” Drive	SKG33117562-612	-	-	
10		5-35 in-lbs Trq Driver, 1/4" Drive	SEG33117289-301	M206418	-	
11		10 mm Combination Wrench	SKG33117562-301	-	-	
12		Vise Grips	SKG33117562-947	-	-	
Type: Restow						
13	**COL1D4_A1**	Ziplock Bag	-	-	-	
14		LHANDLE-BOLT	FSL1074B	-	-	
15	**Temp Stow COL**	0.5 CTB: ESA-7-0.5 CTB	SEG33111836-303	1415	CTB00099E	**REPORT** location to **MCC-H**

FSL-VMU HW-UPDATE S1						
4.266 FSL VMU HARDWARE UPDATE						
Type: Standard						
#	**LOCATION**	**ITEM NAME**	**P/N**	**S/N**	**B/C**	**Notes**
1	**COL1F3** Columbus Tool Kit #2	Flex Handle Ratchet, 1/4" Drive	TM831	-	00000760E	
2		2” Extension 1/4" Drive	405/2-11010001	-	-	
3	**COL1F3** Columbus Tool Kit #3	M4 (3 mm) Hex Head Driver 1/4" Drive	44-01050003	-	-	Use 1/8” Hex Head, 1/4" Drive if 3 mm not available.
4	**NOD1D4**	5-35 in-lbs Trq Driver, 1/4" Drive	SEG33117289-301	M206418	-	
5		1/8” Hex Head, 1/4" Drive	SKG33117562-740	-	-	
6	**Retrieve from Oleg** 0.5 CTB: ESA-5-0.5 CTB	FSL VMU HDD 1	FSL 14.FM.450	FM001	FSL00263E	Ref. 36P Unpack item 74.2
7		FSL VMU HDD 2	FSL 14.FM.450	FM002	FSL00262E	
8	**COL1O1_J1**	VMU SDLT II Cartridge	FSL 14.FM.550	QH0711A MC00194	FSL00107E	
Type: Restow						
9	**COL1D4_C1** 0.5 CTB: FSL-6, S/N 1356, B/C CTB00315E	FSL VMU HDD 1	FSL 14.FM.420	FM001	FSL00019E	
10		FSL VMU HDD 2	FSL 14.FM.420	FM002	FSL00020E	
11		FSL VMU DLT	FSL 14.FM.520	FM001	FSL00017E	
12	**Temp Stow COL**	0.5 CTB: ESA-6-0.5 CTB	SEG33111836-303	1412	CTB00103E	**REPORT** location to **MCC-H**
13		0.5 CTB: ESA-5-0.5 CTB	SEG33111836-303	1414	CTB00104E	

JAXA Timeline Procedures:

CBEF-FAN REPAIR-1G						
F034596 4.017 CBEF 1G TEMP CONTROL FAN ATTACHMENT						
Type: Standard						
#	LOCATION	ITEM NAME	P/N	S/N	B/C	Notes
1	**Pregathered Toolset "Jeff" or "TV"**	Ratchet, 1/4" Drive	-	-	-	
2		5/32" Hex Head, 1/4" Drive	-	-	-	
3		Static Wrist Tether	-	-	-	
4	**NOD1O4_B1** 0.5 CTB, FCE SPARES, S/N 1220, B/C 010401J	LED Headlamp	SEZ33103989-301	**ANY**	-	
5	**NOD1D4 Under table** 2.0 CTB, S/N 1109, B/C 010697J	Bubble Wrap Bag "CBEF Fan Locking Bolt"	-	-	-	Transfer List Resupply Item # 32
6		CBEF Fan Locking Bolt	T6-24497-101	001 002	00111618N 00111619N	One of two bolts will be used. Another is spare.
7	**JPM1O3_C2** 1.0 CTB, JAXA #4, S/N 1048, B/C 002933J	Kapton Tape 1"	LSE-KAP001	002	JLS00412N	
8		Large Glove [QTY: 1 pair]	LSE-GV002	002	JLS00312N	
9	**JPM1O2_C1** 1.0 CTB, MEASUREMENT EXP/DOSIS, S/N 1329, B/C 010665J	1G Temp Control Fan	T6-24492-111	001	CBEFR002N	
10	**JPM1O3_C2** JEM Bag 6, S/N 001, B/C JBAG0006N	Ziplock Bag " CBEF IU Humidifier"	-	-	-	
11		CBEF IU Humidifier	T6-24280	002	CBEIHUM2N	
12	**JPM1O3_B2** 1.0 CTB, CTB-U-S2, S/N 1002, B/C 1CTB0002N	BZK Wipe	BCCK003	002	JLS00432N	

Type: Restow						
13	**JPM1O2_C1** 1.0 CTB, MEASUREMENT EXP/DOSIS, S/N 1329, B/C 010665J	Bubble Wrap Bag "CBEF Fan Locking Bolt"	-	-	-	
14		CBEF Fan Locking Bolt	T6-24497-101	002	00111619N	

Tasklist Procedures:

BCAT3-CRYSTAL-CHECK						
2.034 BCAT-4 CRYSTAL CHECK FOR SAMPLES 8,9, and 10						
Type: Standard						
#	**LOCATION**	**ITEM NAME**	**P/N**	**S/N**	**B/C**	**Notes**
1	**LAB1O7 Rack Front**	BCAT-3 Slow Growth Sample Module	67041FSM2200	-	00030426L	
2	**LAB1O4_J1** 0.5 CTB BCAT S/N 1240, B/C 010421J	LED Mini Maglight	60107MFA2017	-	00105256L	
3		1.5V Battery Size AA	528-41350-3	-	-	(if required)

WHC-KTO-REPLACE						
2.305 WHC [KTO] R&R						
Type: Standard						
#	**LOCATION**	**ITEM NAME**	**P/N**	**S/N**	**B/C**	**Notes**
1	**FGB Panel 220** or **FGB Floor** or **NOD1O2**	Solid Waste Container – Body (aka KTO Body)	11Φ615.8720A55-20	257 263 264 265 272 275 278 282 304 307 308 309	- 00112722J 00112724J 00112735J 00116316J 00116313J 00116302J 00116311J 00112744J 00112738J - 00112746J	This is the list of available KTO Bodies. **REPORT S/N and B/C**

				310 325	00112748J 00112736J	
2		Solid Waste Container – Lid (aka KTO Bottom)	11Φ615.8720A55-10	257 258 263 265 272 274 275 278 282 307 308 309 310 325	00098427R 00098428R 00112721J 00112733J 00098472R 00098474R 00098475R 00098438R 00098442R 00112737J - 00112745J 00112747J -	This is the list of available KTO Lids. **REPORT S/N and B/C**
3	**LAB1D1**	Solid Waste Container – Body (aka KTO Body)	11Φ615.8720A55-20	305	00112730J	Prepositioned for Install
4		Solid Waste Container – Lid (aka KTO Bottom)	11Φ615.8720A55-10	276	00098436R	
5	**NOD1D4**	Ratchet, 1/4" Drive	SKG33117562-939	-	-	
6		10 mm 6 Pt Socket, 1/4" Drive	SKG33117562-657	-	-	
7		(10-50 in-lbs) Trq Wrench, 1/4" Drive	SEG33112395-301	M206422	-	
Type: Restow						
8	**LAB1S1** TeSS	Solid Waste Container – Body (aka KTO Body)	11Φ615.8720A55-20	-	-	**REPORT S/N and B/C**
9		Solid Waste Container – Lid (aka KTO Bottom)	11Φ615.8720A55-10	-	-	

WHC-ЕДВ-У-R&R						
2.302 WHC ЕДВ R&R						
Type: Standard						
#	**LOCATION**	**ITEM NAME**	**P/N**	**S/N**	**B/C**	**Notes**
1	**LAB1P2** 0.5 CTB S/N 1221, B/C 010402J	Regen ECLSS Tox-2 PPE KIT	SEG42103702-302	1002	CHCCPK02J	
2		Safety Goggles	16644-00000	-	-	
3		Silver Shield Gloves	SSG/10	-	-	
4		Dust Mask	9211	-	-	
5	**LAB1D1**	ЕДВ Крышка (EDV Lid)	11Ф615.8711-180A15-1	935	00125549J	Prepositioned
6		ЕДВ Корпус (EDV Bucket)	11Ф615.8711-120A15-1	459	00125565J	
7	**NOD1O2**	ЕДВ Крышка (EDV Lid)	11Ф615.8711-180A15-1	902	00098592R	
8		ЕДВ Крышка (EDV Lid)	11Ф615.8711-180A15-1	904	00098594R	
9		ЕДВ Крышка (EDV Lid)	11Ф615.8711-180A15-1	922	00047831R	
10	**FGB**	ЕДВ Крышка (EDV Lid)	11Ф615.8711-180A15-1	-	-	**REPORT S/N and B/C**
11		ЕДВ Корпус (EDV Bucket)	11Ф615.8711-120A15-1	-	-	
Type: Restow						
12	**LAB1S1**	ЕДВ Крышка (EDV Lid)	11Ф615.8711-180A15-1	931	00116326J	
13		ЕДВ Корпус (EDV Bucket)	11Ф615.8711-120A15-1	455	00116319J	

PWD-BEV ADPTR-R&R						
22-0309 PWD Beverage Adapter Modification and Install						
Type: Standard						
#	**LOCATION**	**ITEM NAME**	**P/N**	**S/N**	**B/C**	**Notes**
1	**LAB1O4_D1**	PWD Beverage Adapter	SEG33120333-302	1002	-	
2	**NOD1D4**	Ratchet, 1/4” Drive	SKG33117562-939	-	-	
3		5/32” Hex Head, 1/4” Drive	SKG33117562-742	-	-	
Type: Restow						
4	**LAB1O4_D1**	PWD Beverage Adapter	SEG33120333-301	-	-	

JAXA Tasklist Procedures:
None

ESA Tasklist Procedures:
None

OVERVIEW: This message provides stowage information for the Cupola Vestibule Outfitting activities on FD08 and FD09.

Table A: Hardware and Tools

ITEM #	√	LOCATION	ITEM	P/N	S/N	B/C	NOTES
1		**JPM1F2** 2.0 CTB, S/N 1033, B/C 004167J	2.0 CTB	SEG33111839-303	**Any**	**Any**	**Empty REPORT S/N to MCC-H LABEL** "Cupola CBM CPAs"
2		**LAB1D5** 1.0 CTB: 20A Pregather #1, S/N 1263, B/C 010599J	Element Ground Strap Assy [QTY: 2]	683-13477-7	1028 1029	- -	
3			CTB Half Divider [QTY: 2]	SEG33111841-317	-	-	For CPA stowage
4			FFTD and Gamah Seal Maintenance Kit	SJG33114223-301	1001	-	
5			Fluid Fitting Torque Device	990204-101	-	-	
6			Drive Gear, 1.375"	26900-20066-301	-	-	
7			Reaction Gear, 1.0"	990204-032	-	-	
8			Gamah Fitting Maintenance Kit	683-60408-3	-	-	
9			Gamah Seal Removal Tool, 3/4" Gamah Fitting	683-60467-3	-	-	
10			Gamah Fitting Maintenance Kit	683-60408-4	-	-	
11			Retaining Ring Installation/Removal Tool, .750"	683-60474-3	-	-	
12			Gamah Seal Maintenance Kit	528-50000-4	-	-	
13			Metal Seals [QTY: 2]	S14707C	-	-	
14			Retaining Ring [QTY: 2]	R14107C	-	-	
15		**LAB1O5**	CSA-O2 [QTY: 2]	SED46115801-305	1046 1063	00054324J 00054341J	

ITEM #	√	LOCATION	ITEM	P/N	S/N	B/C	NOTES
16		**NOD1D4_G2** ISS IVA Toolbox Drawer 2	7/16" Deep Socket, 3/8" Drive	SKG33117562-709	-	-	
17			7/16" Socket, 1/4" Drive	SKG33117562-701	-	-	
18			1/4" Hex Head, 1/4" Drive	SKG33117562-745	-	-	
19			6" Ext, 3/8" Drive	SKG33117562-774	-	-	
20			(40-200 in-lbs) Trq Wrench, 3/8" Drive	SEG33117289-302	M213569	-	
21			(10-50 in-lbs) Trq Wrench, 1/4" Drive	SEG33112395-301	M206422	-	
22		**Pregathered ToolSet "Jeff", "TV", or Shuttle**	Ratchet, 1/4" Drive	SKG33117562-939	-	-	
23			Ratchet, 3/8" Drive	SKG33117562-938	-	-	
24			Driver Handle, 1/4" Drive	SKG33117562-941	-	-	
25			5/32" Hex Head, 1/4" Drive	SKG33117562-742	-	-	
26			3/16" Hex Head, 1/4" Drive	SKG33117562-743	-	-	
27			3/8" Socket, 1/4" Drive	SKG33117562-699	-	-	
28			4" Ext, 1/4" Drive	SKG33117562-764	-	-	
29			Wire Cutters	SKG33117562-926	-	-	
30			Static Wrist Tether	SKG33117562-335	-	-	
31		**NOD1P1** 1.0 CTB, S/N 1015, B/C 002310J	CTB Half Divider	SEG33111841-317	-	-	For CPA stowage
32		**NOD3F1** 2.0 CTB: Installation HW #1, S/N 1092, B/C 010680J	Ziplock" NODE 3 Nadir CBM CPA Removal Hardware"	528-50000-5	-	-	Contains CPA Protective Caps and 24" x 24" Ziplocks
33		**NOD1P2** 3.0 CTB: Node 3 Vestibule Outfitting kit (VOK), S/N 1048, B/C 004233J	Ziplock Bag labeled "NOD1-NOD3 IMV H/W"	-	-	-	From N3 Vestibule Outfitting Procedure
34			IMV Flange Saver	683-15016-2	-	-	**REPORT S/N to MCC-H**

1

Table B: Restow

ITEM #	√	LOCATION	ITEM	P/N	S/N	B/C	Notes
35		**NOD3O1** 3.0 CTB: Node 3 Vestibule Outfitting kit (VOK), S/N 1048, B/C 004233J	0.5 CTB: NOD3 Uninstalled Hardware	SEG33111836-303	1065	003947J	
36			Ziplock Bag	-	-	-	
37			Wire Ties	-	-	-	
38			Launch Bolts	-	-	-	
39			Ziplock Bag labeled “NOD1-NOD3 IMV H/W”	-	-	-	
40			Ziplock Bag “N3 Nadir IMV Supply Cap”	-	-	-	
41			Ziplock Bag “Node 3 Nadir Vestibule Protective Caps”	-	-	-	
42			Protective Caps [QTY: 8]	-	-	-	
43			1553 Bus Terminators [QTY: 2]	-	-	-	
44			Ziplock Bag “NOD3-Cupola HTL Gamah Caps”	-	-	-	
45			Gamah Caps [QTY: 2]	-	-	-	
46			CBM Center Disk Cover	683-14575	-	-	
47		**COL1D2** 5 MLE Bag F	Cupola Internal MLI	-	-	-	4 Pieces
48			Leftover HTL Insulation	-	-	-	
49		**NOD3D1**	2.0 CTB	SEG33111839-303	**Any**	**Any**	
50			CBM Controller Panel Assembly [QTY:4]	2355260-1-1	**Any**	**Any**	

OBJECTIVE:

This procedure will be used to transfer frozen science samples from both ISS MELFIs to Shuttle Glacier. One Double Coldbag will be used to transfer samples from both MELFIs to Glacier. This activity is performed by ISS and shuttle crewmembers.

PARTS:

Double Coldbag S/N 1006

LtWt Cryo Gloves (a.k.a Mechanix Wear)

TOOLS:

3/16" Hex Head, 3/8" Drive

4" Ext, 1/4" Drive

1/4" to 3/8" Adapter (1/4" Drive)

Ratchet, 1/4" Drive

(40-200 in-lbs) Trq Wrench, 1/4" Drive

Coldplate/Wireway Cover

ITEMS TO UNSTOW WITHIN PROCEDURE:

Icepac Belt -21° C (two) (unstow step 2)

Vial Bags (eleven) (unstow step 2)

3x5 Mesh Bag (unstow step 2)

APEX-Cambium KFT (five) (unstow step 2)

JAXA CERISE CBH (four) (unstow step 2)

MF28E/G (Glacier)

1. Unlock Glacier Door Captive Locks (two) using 3/16" Hex Head, 3/8" Drive; 4" Ext, 1/4" Drive; 1/4" to 3/8" Adapter (1/4" Drive); Ratchet, 1/4" Drive.

   Refer to Figure 1.

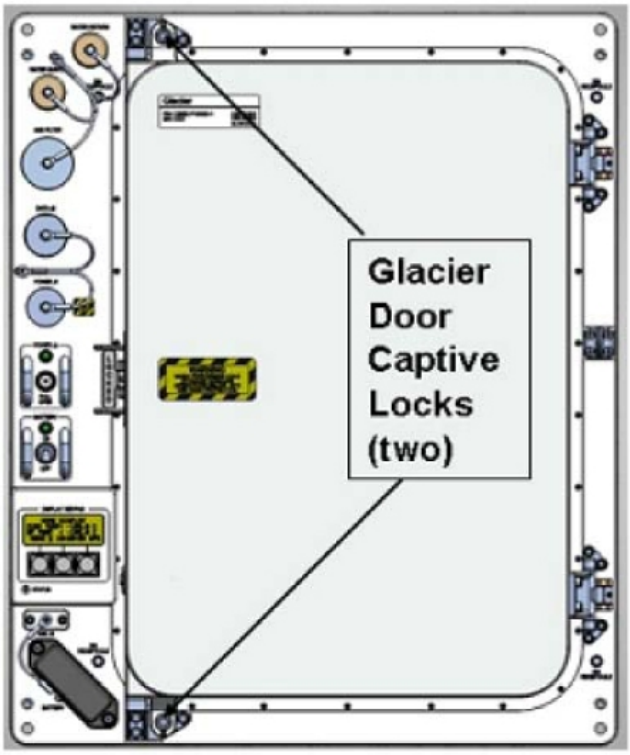

Figure 1. Glacier Door Captive Locks.

MELFI 2. PACKING MELFI SAMPLES INTO DOUBLE COLDBAG

WARNING
Protective Gloves must be worn when manipulating MELFI trays or samples to prevent injury to exposed skin.

CAUTION
1. Minimize exposure of MELFI trays, frozen Icepacs, and samples to ambient air to prevent increased sample temperatures.
2. Double Coldbag lid should remain closed when the internal volume is not being accessed.

NOTE

The 60 seconds and 45 minutes MELFI Dewar opening rules do not apply during packing of the Coldbag.

2.1 Don Gloves.

2.2 Pack Double Coldbag per Figure 2.

```
*****************************************************************************
*
*   If Tray is stuck and cannot be removed from Dewar
*
*   |     Insert Coldplate/Wireway Cover completely between Tray
*   |      and Dewar wall
*   |     Firmly holding both Coldplate/Wireway Cover and Tray
*   |      Handle, remove Tray from Dewar.
*   |     Reference: 4.010 MELFI REMOVAL OF A STUCK TRAY,
*   |      steps 5 to 13 (US PODF: MELFI) if needed.
*
*****************************************************************************
```

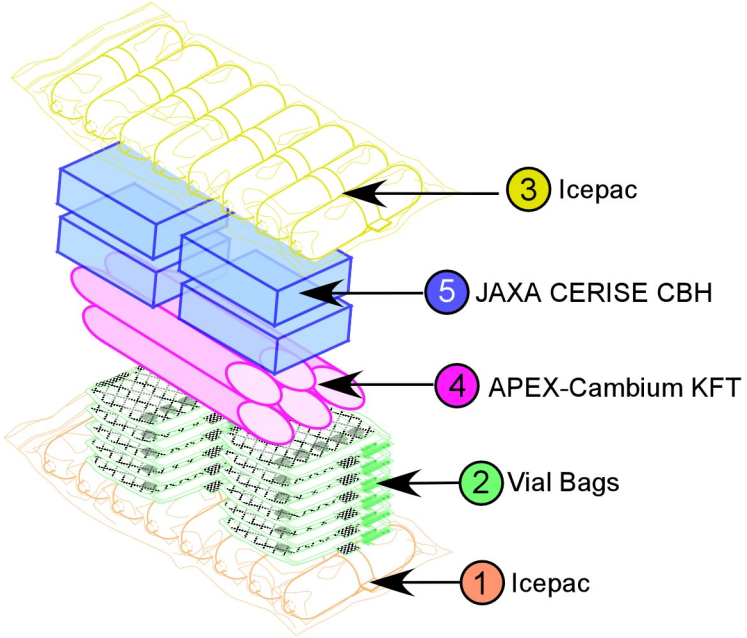

Step	From		Description
1	MELFI-1	3-D-3	Install Icepac Belt -21°C on bottom
2a	MELFI-1	2-B-4	Install Vial Bag (two), HRP Blood
2b	MELFI-1	2-D-2	Install Vial Bag (four), HRP Blood 3x5 Mesh Bag (one), HRP Urine
2c	MELFI-1	2-A-1	Install Vial Bag (four), HRP Blood
2d	MELFI-1	2-A-2,3	Install Vial Bag (one), HRP Blood *(leave urine wraps and mesh bags in this location)*
3	MELFI-1	3-D-4	Install Icepac Belt -21°C on top
Transfer Double Coldbag to MELFI-2 to retrieve remaining samples. When inserting remaining samples, remove top icepac belt to secure samples underneath.			
4	MELFI-2	2-A-3,4	Install APEX-Cambium KFT (five)
5a	MELFI-2	2-C-3,4	Install JAXA CERISE CBH (two)
5b	MELFI-2	2-D-3,4	Install JAXA CERISE CBH (two)

Figure 2. Double Coldbag Packing Configuration.

3. Transfer Double Coldbag to shuttle middeck.

4. UNPACKING DOUBLE COLDBAG AND INSERTING SAMPLES INTO GLACIER

WARNING
Protective gloves must be worn when handling frozen samples or manipulating inner doors, cold trays or samples in Glacier to prevent injury to exposed skin.

CAUTION
1. Minimize exposure of Glacier trays and samples to ambient air to prevent increased sample temperatures.
2. Glacier inner doors should remain closed when the internal volume is not being accessed. Glacier doors should not be open for longer than 2 minutes.

NOTE

1. First priority is to perform packing as quickly as possible.
2. Packing foam secured to bottom of each tray can be left in place.
3. Loose cushion foam may be left in tray if there is room, or it can be trashed.

MF28E/G (Glacier)

4.1 Don Gloves

4.2 Insert JAXA CERISE CBH (two) into Tray A.

4.3 Insert JAXA CERISECBH (two) in to Tray B.

4.4 Insert APEX-Cambium KFT (five) in Tray C

4.5 Insert Vial Bags (eleven) and 3x5 Mesh Bag (one) in Tray D

5. ✓Glacier Door is closed.

```
*****************************************************************************************
*
*
*   If Outer Door does not close
*
*   |   Press on top left corner and bottom left corner of door to assist with
*   |    closure.
*
*****************************************************************************************
```

6. ✓Door Latch – Locked (Finger latches fully spread apart and locking flap positioned between finger latches.)

WARNING

Glacier Door Captive Locks (two) must be torqued to 75 in-lbs to prevent door from opening during launch and return.

7. Fasten Glacier Door Captive Locks (two), torque to 75 in-lbs using 3/16" Hex Head, 3/8" Drive; 4" Ext, 1/4" Drive; 1/4" to 3/8" Adapter (1/4" Drive); (40-200 in-lbs) Trq Wrench, 1/4" Drive. Refer to Figure 1.

8. TEMPORARY STOW DOUBLE COLDBAG AND ICEPACS ON ISS

8.1 Temporary stow Double Coldbag on ISS in location that protects from kick loads.

8.2 Remove Icepac Belt -21° C (two) from Double Coldbag and place in temporary stowage location to air dry.

8.3 Notify MCC-H that transfer activities completed and locations for Double Coldbag and Icepacs.

9. GROUND UPDATES FOR IMS

Ground updates IMS for the following parts:

Double Cold Bag S/N 1006 TO: per crew call down (step 8.3)
Icepac Belt -21° C (two) TO: per crew call down (step 8.3)
Vial Bag (eleven) TO: Middeck Glacier
Mesh Bag TO: Middeck Glacier
APEX-Cambium KFT (five) TO: Middeck Glacier
JAXA CERISE CBH (four) TO: Middeck Glacier

Nick,
Today you will transfer CGBA-6 to ISS and return CGBA-4 to the middeck. The transfer scenario has changed since your pre-flight training. Please use the updated procedure uplinked and printed today. Below is an overview of the activity for your review:

Three CGBA units are onboard:

CGBA-6 located in the middeck containing NLP-Cells-3 Stowage bag
CGBA-4 located in US Lab, EXPRESS Rack 1 (LAB1O2)
CGBA-5 located in US Lab, EXPRESS Rack 2 (LAB1O1)

Overview of the CGBA and NLP transfer choreography:

- Transfer CGBA-6 from the middeck to the US Lab.
- Remove NLP-Cells-3 Stowage bag from CGBA-6.
- Remove CGBA-5 from ISS locker and insert NLP-Cells-3 Stowage bag into CGBA-5.
- Insert CGBA-5 back into the ISS locker, cable and apply power.
- Complete the CGBA-6 swap with CGBA-4:
  - Remove CGBA-4 from EXPRESS Rack 1
  - A Restraint System is stowed inside the left side of the Nomex cover of CGBA-4. Remove this restraint system and place with CGBA-6.
  - Insert CGBA-6 into EXPRESS Rack 1
  - Transfer CGBA-4 to middeck and install.

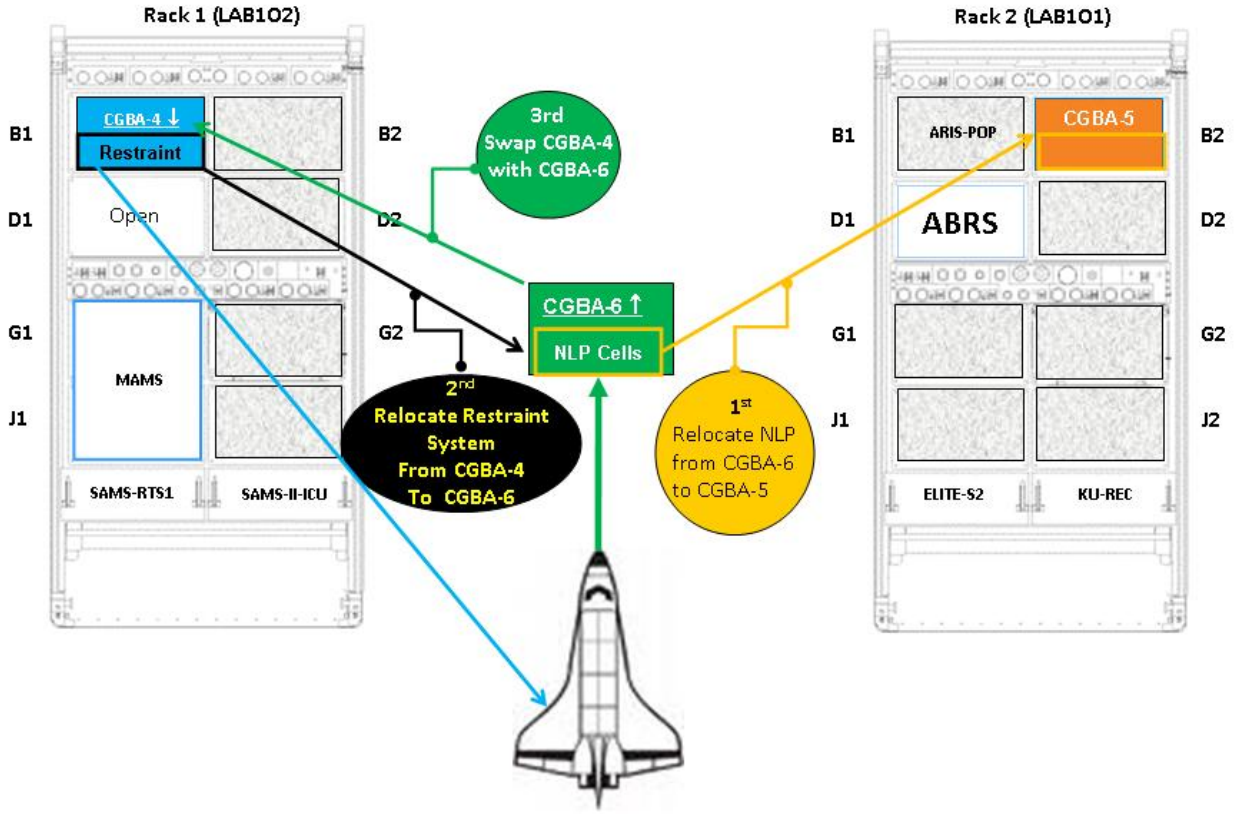

END OF PAGE 1 OF 1, MSG 096

STS-130 Image Acquisition Plan For Post-Flight Quantitative Analysis of Ammonia Jumper Connections on US Lab and Node 3

Objective: Acquire imagery to support post-flight photogrammetric analysis of the distance the MLI covered ammonia jumper connections rise above the surface of the US Lab and Node 3. The regions for quantitative analysis are restricted to the localized areas around which the ammonia jumpers connect to the Lab and where the ammonia jumpers connect to Node 3.

Photography Resources Required: Imagery will be acquired using an EVA certified D2Xs camera equipped with a 28 mm fixed focal length lens (a zoom lens is not permitted).

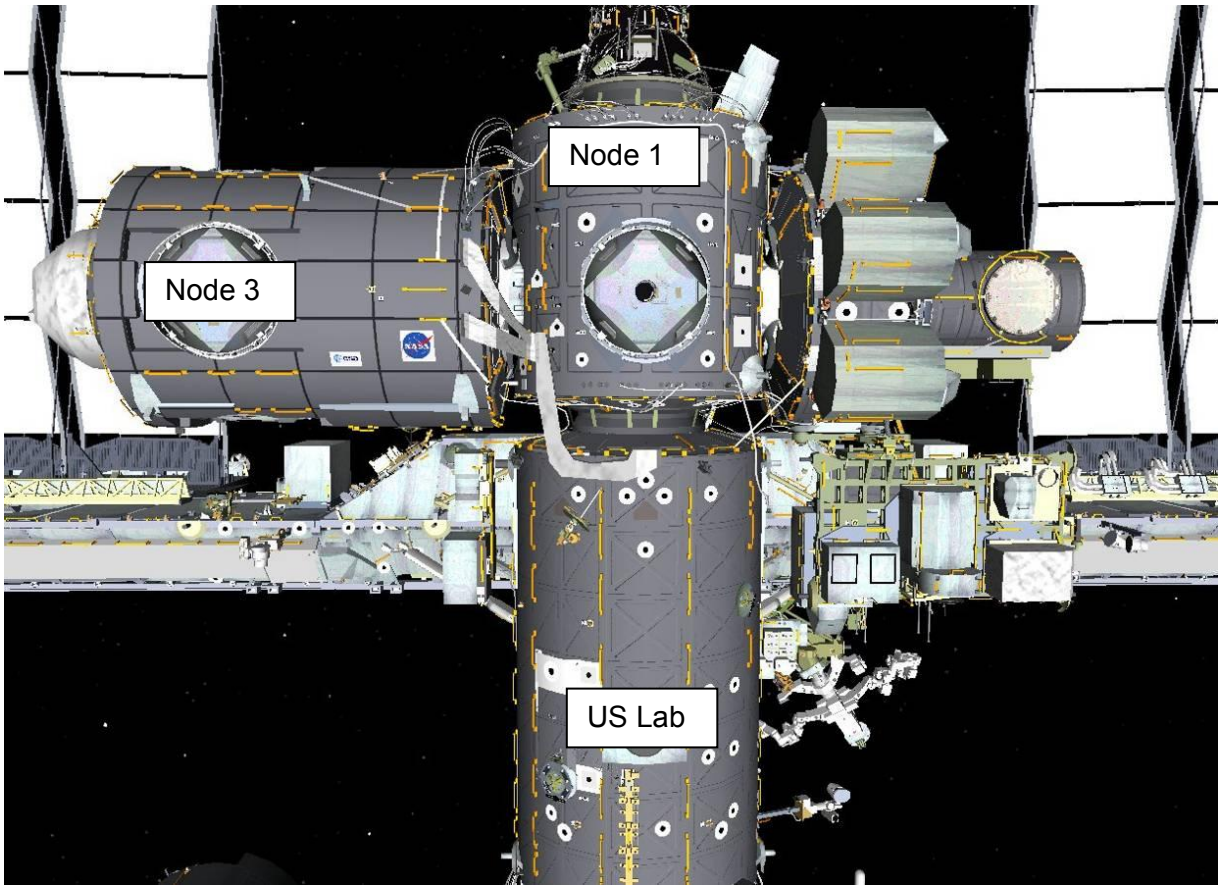

Requested Image Acquisition

Priority 1 MLI covered ammonia jumper cables where they connect to the US Lab from Node 1 Handrails 0132 and 0133 (on Nadir Forward side of Node 1 End Cone)

As time Allows MLI covered ammonia jumper cables where they connect to Node-3 from Node 1 Handrails 0109 and 0110 (on Nadir Port Side of Node 1 near CBM).

At each location from which photos are designated to be taken, the crew member is requested to acquire at least four or more photos of each target using the "stereo photography" technique.

Stereo Photography Technique

"Stereo Photography" consists of acquiring at least two photos of the same static object from a slightly different exposure location.

Using images from different exposure locations allows the creation of a stereo image in which the relative depth of objects in the image can be visually discerned. Using the mathematics of photogrammetry, 3-D measurements of objects in the common field of view of the images can be made.

The technique for acquiring photos which can be used to form a stereo image consists of laterally shifting the camera between adjacent exposures.

TECHNIQUE

1. Distance to subject: 3 - 7 feet.

2. With the camera as far left as possible take the first photo of the object.

3. Offset the camera exposure station laterally to the right 2" per foot of range to the object (so that the next photo overlaps the previous photo by 60% to 80% of the field of view).

   You must physically change the camera exposure location between photos, DO NOT just pan or turn the camera.

4. Repeat as needed to cover the area of interest.

How to take Photos with Stereo Photographic Technique

Side View

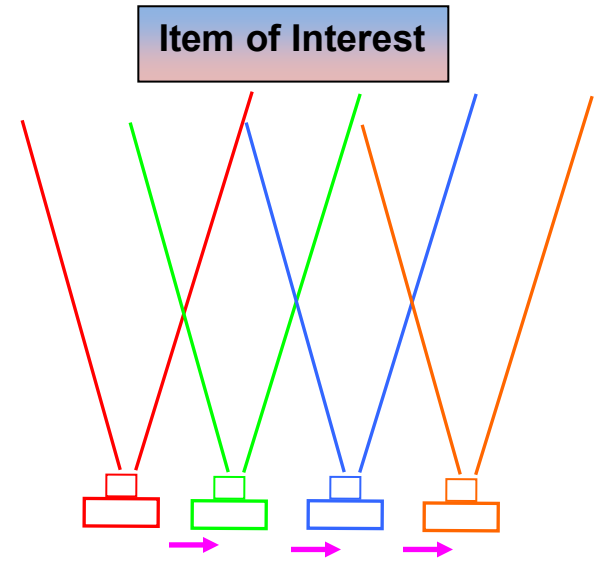

Offset Camera Between Exposures

DO NOT Just Turn the Camera

Face On View

60% to 80% Overlap

Between Photos in the Same Row

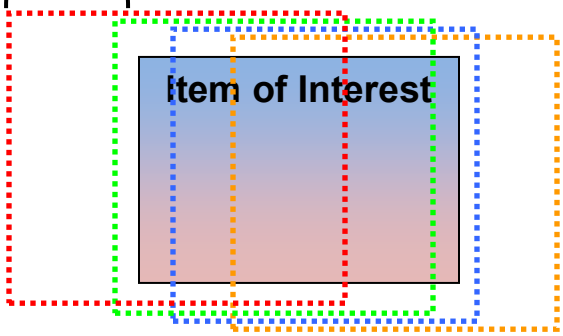

Requested Image Acquisition

A. On Nadir Forward side of Node 1 End Cone (Priority 1)

Acquire photos, using a “stereo photography technique” of the MLI covered ammonia jumper cables where they connect to the US Lab.

1) With BRT attached to handrail 0132 acquire stereo photos of area shown

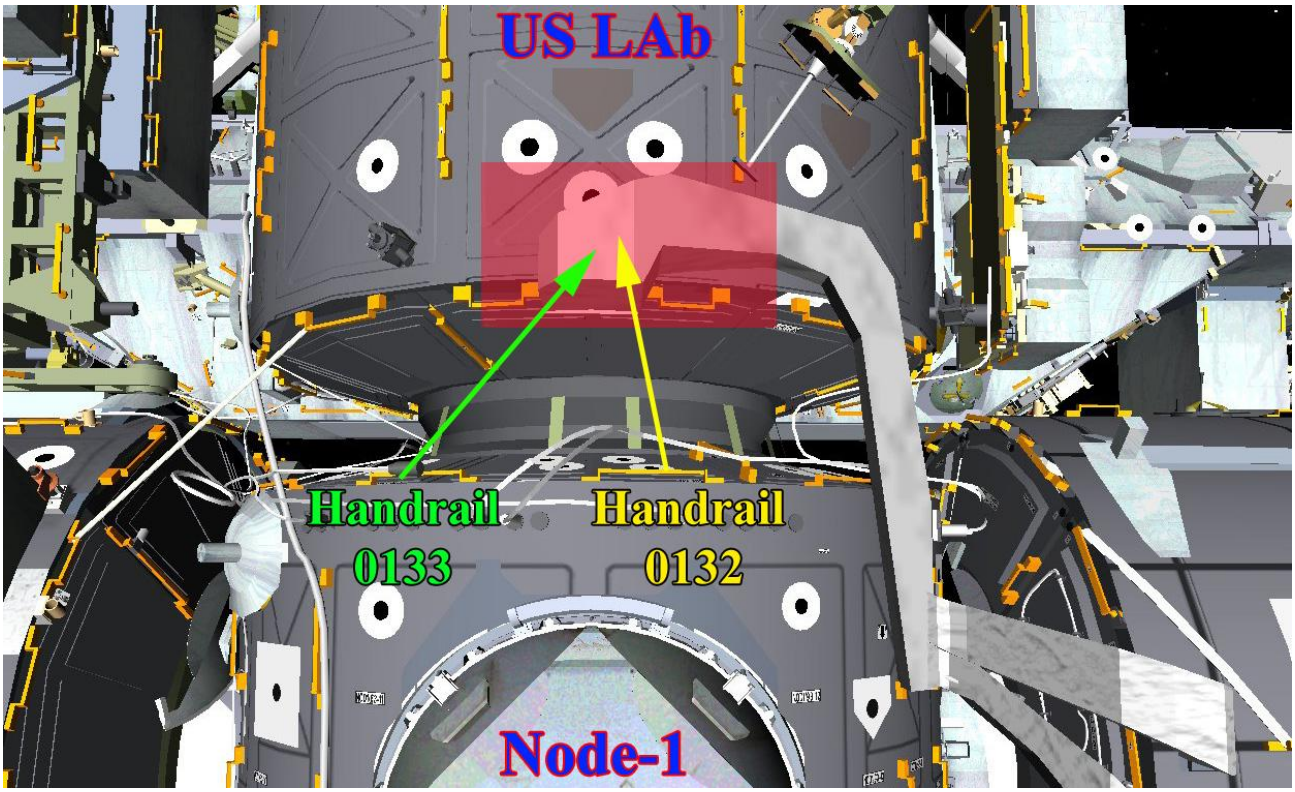

2) With BRT attached to handrail 0133 acquire stereo photos of area shown

Handrail 0132

Acquire photos of MLI covered ammonia jumper cables where they connect to the US Lab from handrail 0132 using a "stereo photography technique". A minimum of 4 photos should be taken, but the true number is dependent upon the number required to cover the area of interest.

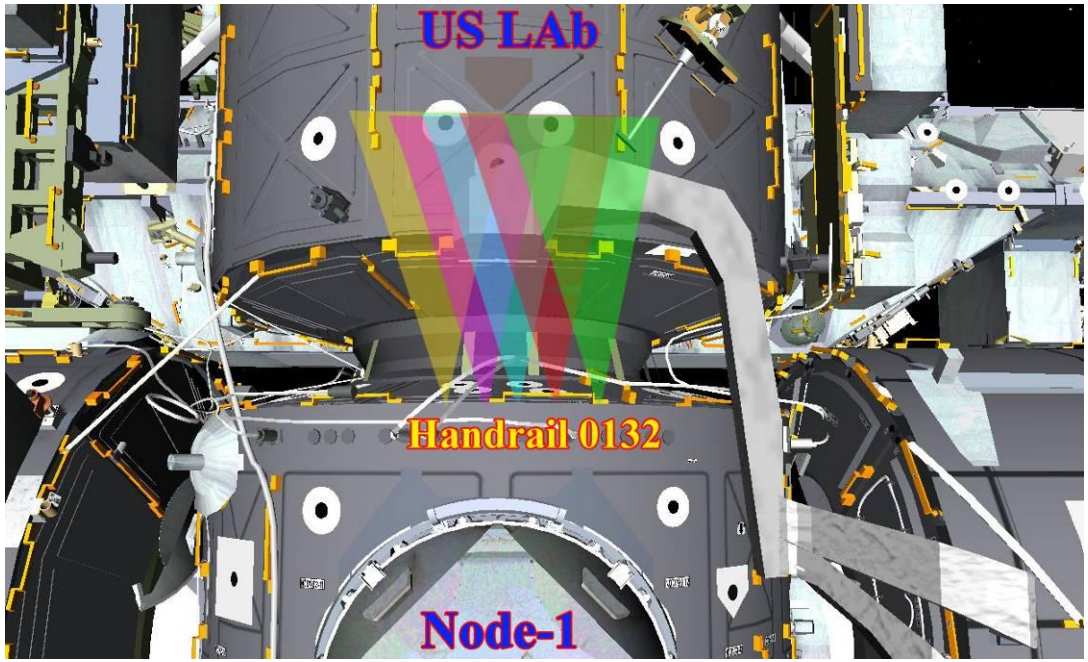

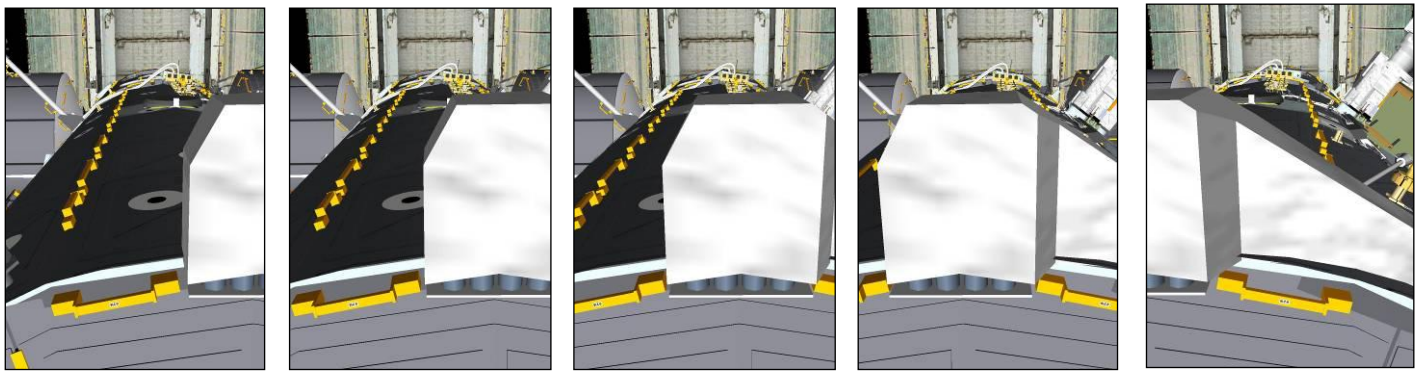

Example of Photos Taken using a Stereo Photographic Technique

Handrail 0133

Acquire photos of MLI covered ammonia jumper cables where they connect to the US Lab from handrail 0133 using a “stereo photography technique”. A minimum of 4 photos should be taken, but the true number is dependent upon the number required to cover the area of interest.

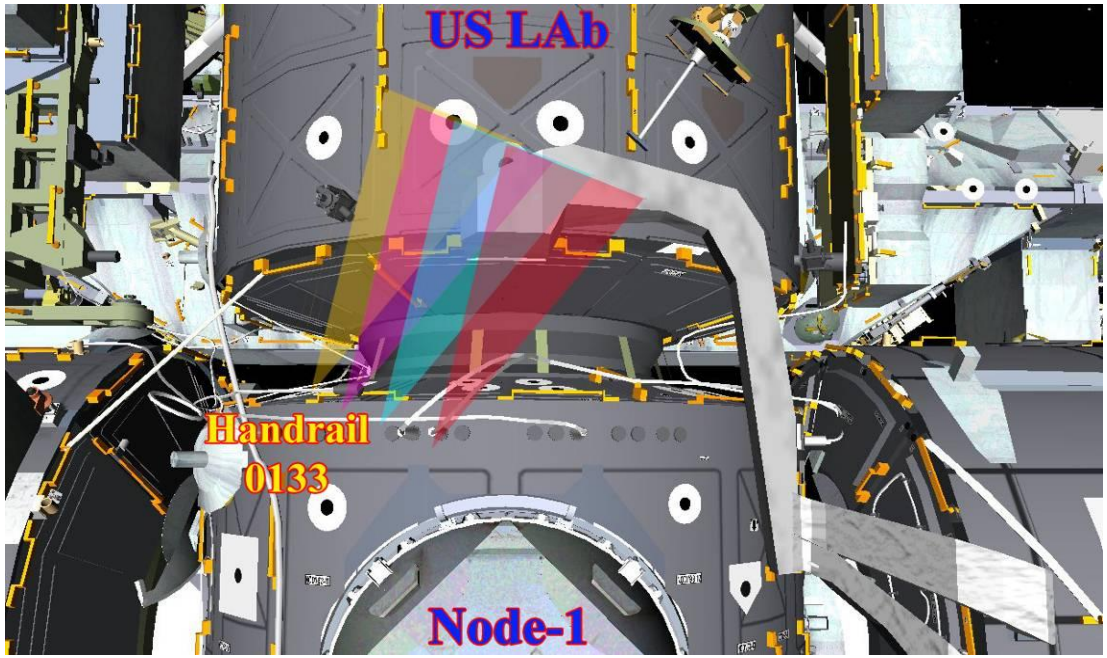

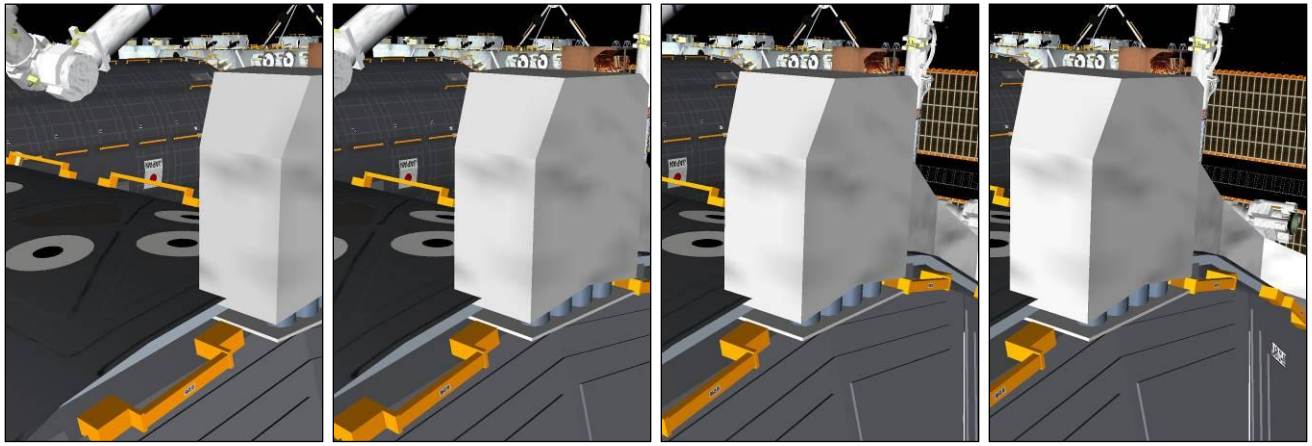

B. On Nadir Port Side of Node 1 near CBM (as time allows)

Acquire photos, using a “stereo photography technique” of the MLI covered ammonia jumper cables where they connect to Node 3.

1) With BRT attached to handrail 0109 acquire stereo photos of area shown

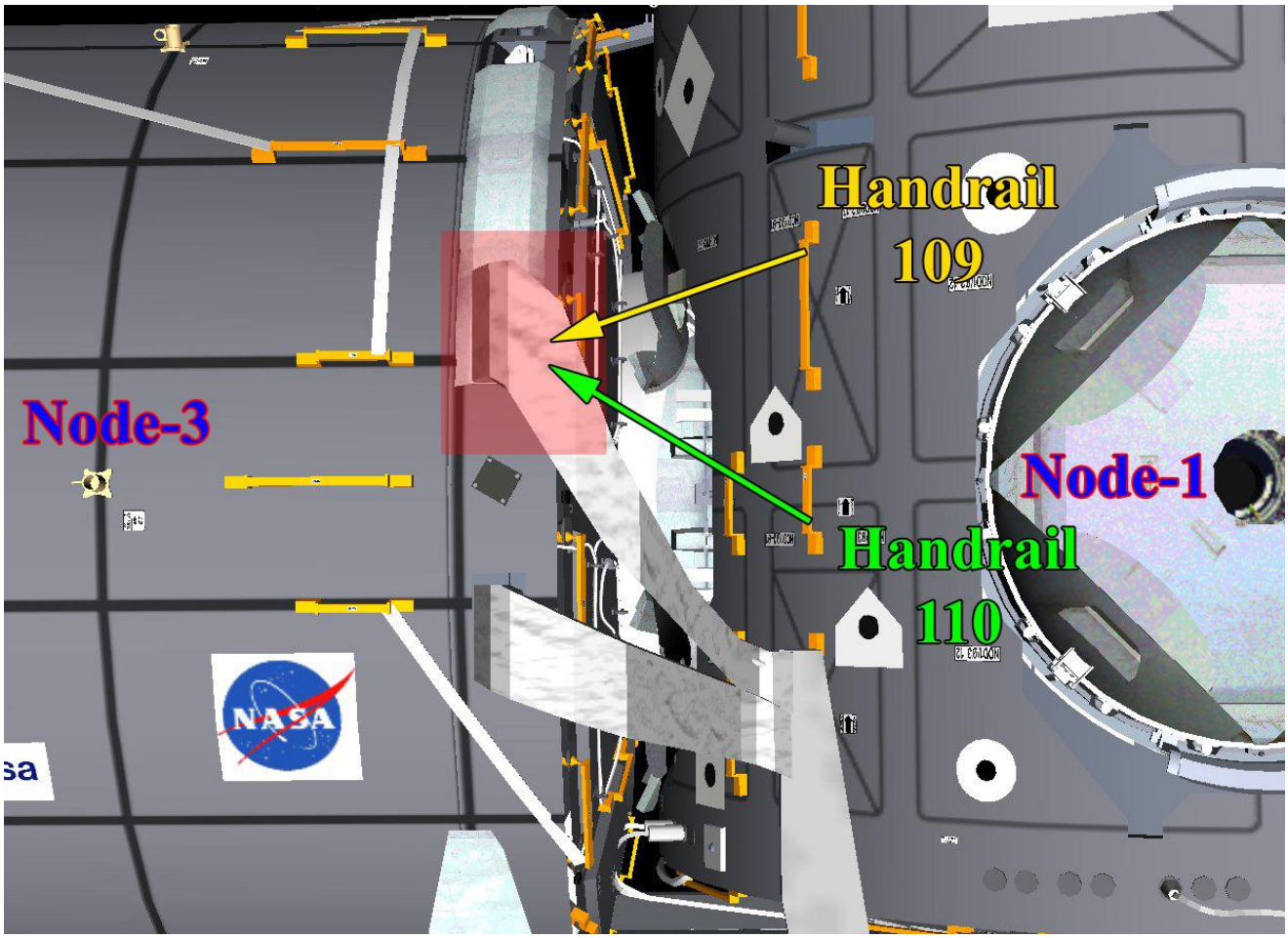

2) With BRT attached to handrail 0110 acquire stereo photos of area shown

Handrail 0109

Acquire photos of MLI covered ammonia jumper cables where they connect to Node-3 from handrail 0109 using a “stereo photography technique”. A minimum of 4 photos should be taken, but the true number is dependent upon the number required to cover the area of interest.

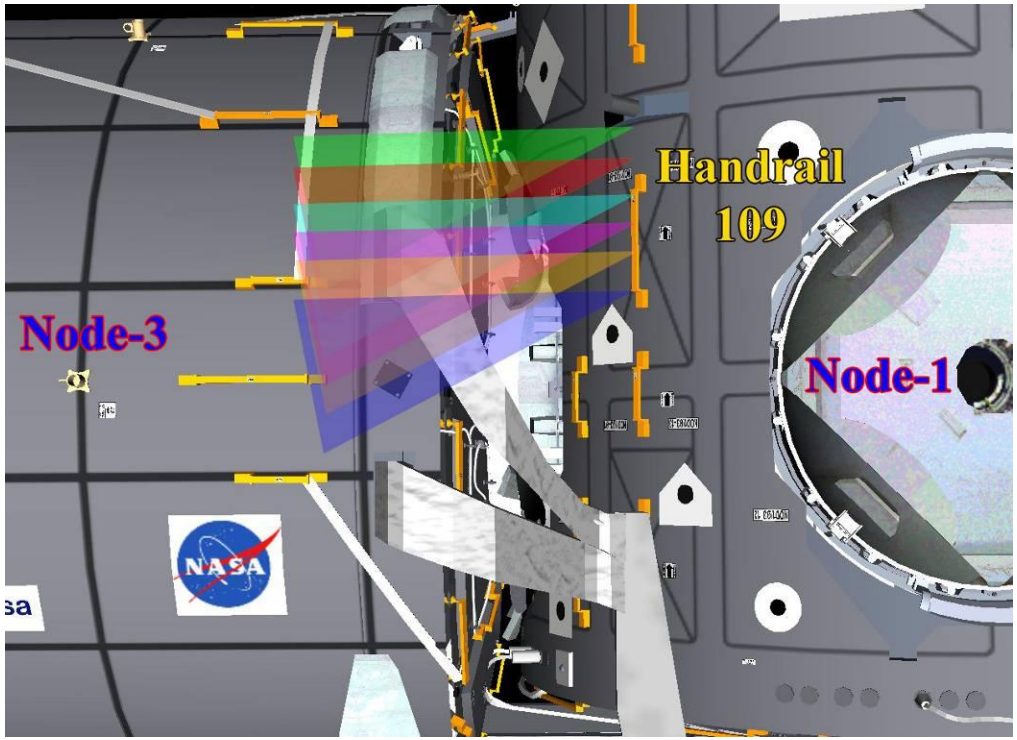

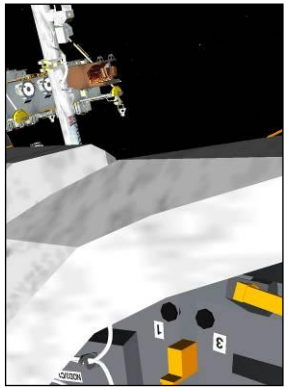

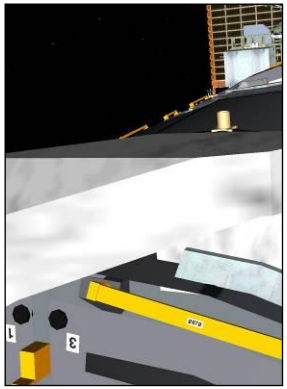
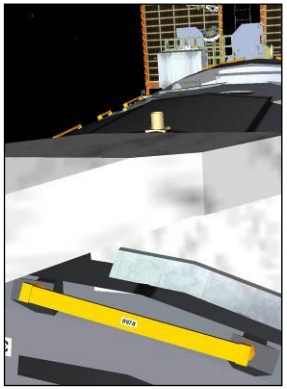
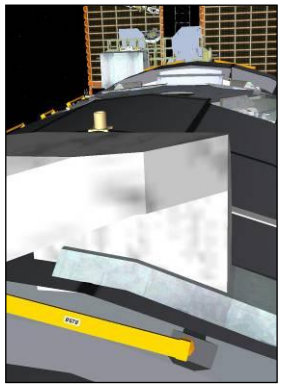
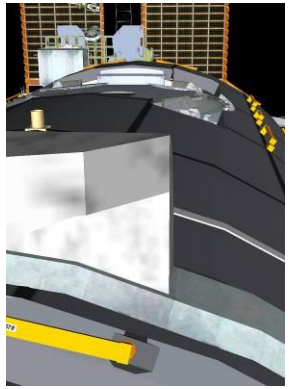

Handrail 0110

Acquire photos of MLI covered ammonia jumper cables where they connect to Node-3 from handrail 0110 using a “stereo photography technique”. A minimum of 4 photos should be taken, but the true number is dependent upon the number required to cover the area of interest.

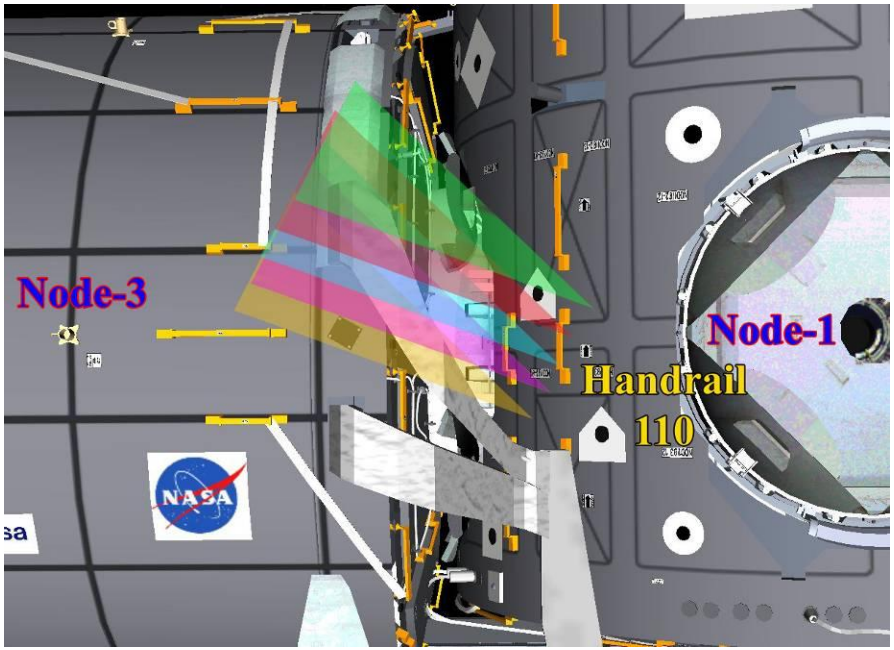

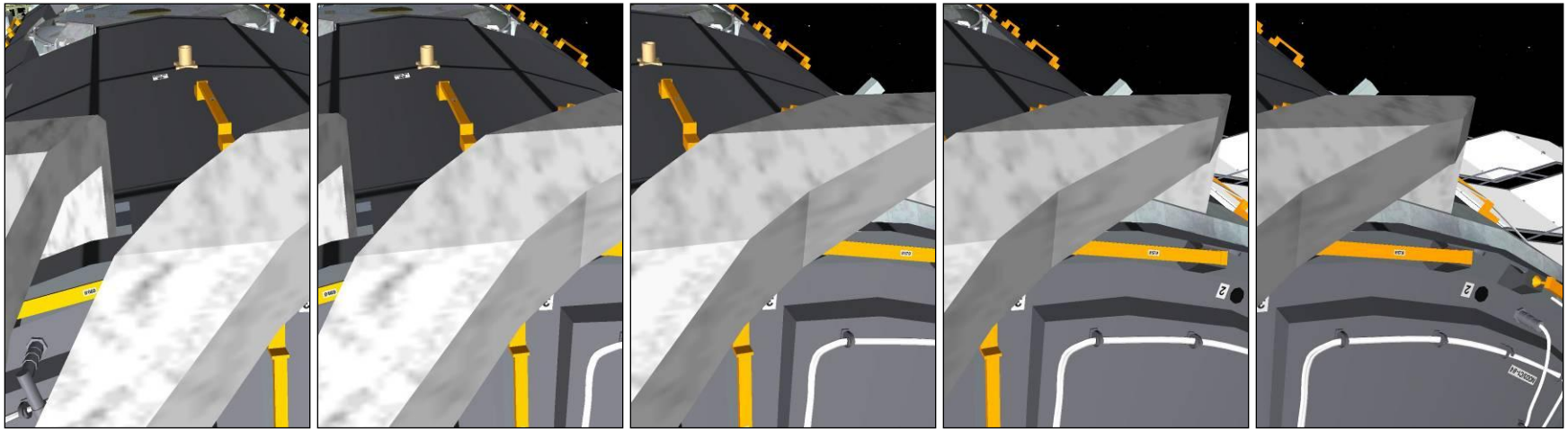

Bob & Nick,
Fantastic work on EVA 2! It is great to see Node 3 coming online. We have a question from EVA 2 and a few updates to EVA 3 for you.

EVA 2
We need confirmation on the torque and turn count for OIH 600 install. We were in a 5 min LOS at the time.

EVA 3
1) In Mesh Bag #3 for EVA 3, you will find 3 caps. For the PMA 3 cable, you will need two caps: the -25 for P608 and the -15 for P603. The other cap (size 17) can be stowed in the done bag.

2) Pen and Ink for NOD3 NH3 Jumper/MLI Closeout on FS 7-102
WAS: Step 18. Take pictures of NH3 Jumper/MLI configuration
IS: Step 18. Take pictures of NH3 Jumper/MLI configuration, reference JEDI MSG 100 - NH3 Jumper MLI Closeout Photo Details.

3) Pen and Ink for EVA QD OPS Cue Card on FS CC 7-79, Block C
Add: 2a. Mitigate sideloads when opening valve

Bob's Comm Cap
We are trying our best to keep the lines of communication open with Bob. Bob is currently using Nick's backup comm cap, with no shuttle backups remaining. We have identified Jeff Williams' comm cap as a suitable backup for both Bob and Nick. During E-Lk Prep, retrieve both Comm Cap Wl1 (s/n 1199) and Comm Cap Wl2 (s/n 1205), and stow them in the E-Lk. Those comm caps are currently stowed in Williams' ECOK in NOD1D2.

OBJECTIVE:

To swap Commercial Generic Bioprocessing Apparatus (CGBA-6), MF71E, with returning CGBA-4 in EXPRESS-1 Rack. Transfer NLP Cells from inside CGBA-6 to CGBA-5 in EXPRESS-2 Rack and then power up CGBA-5. Transfer CGBA Restraint System from CGBA-4 to CGBA-6. Install CGBA-6, connect cables and put cb/sw in the On position. Transfer CGBA-4 to middeck and insert into locker.

PARTS:

CGBA (two) - reference Transfer List

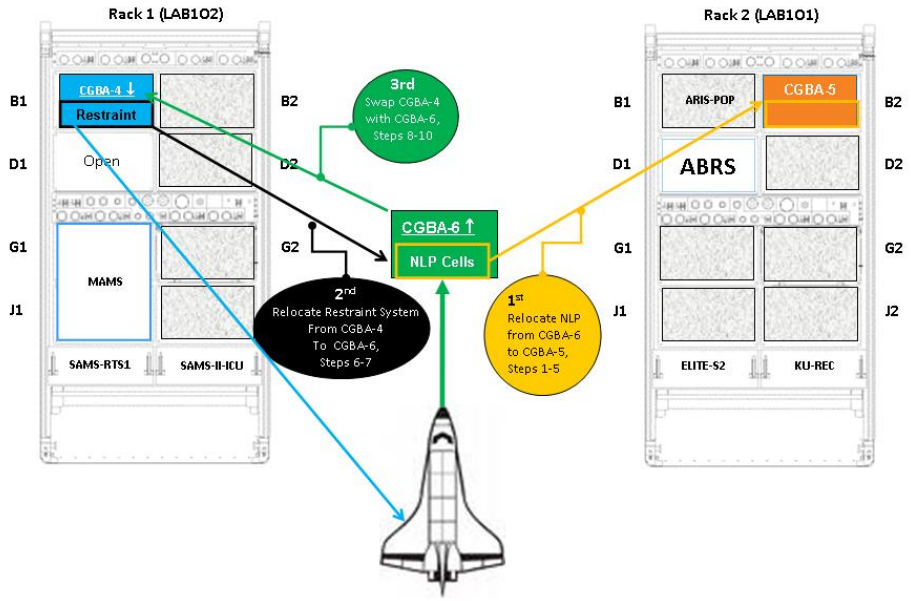

Figure 1. Transfer Overview

1. CGBA-6 REMOVAL FROM MIDDECK

MF71E

1.1 Unlatch, open locker door.

1.2 Grasp CGBA-6, pull unit out of locker using side handles.

If needed, pull Velcro tabs to deploy CGBA recessed handles (push recessed handles back into place when done).

1.3 Close locker door

LAB1O2

1.4 Transfer CGBA-6 to vicinity of EXPRESS-1 Rack

2. TRANSFER NLP-CELLS-3 STOW BAG

2.1 Open CGBA-6 lid, remove NLP-Cells-3 Stow Bag. Close CGBA-6 lid.

Temporary stow CGBA-6 on EXPRESS -1 Rack

2.2 Transfer NLP-Cells-3 Stow Bag to CGBA-5.

LAB1O1_B 2 (CGBA-5)

2.3 Remove CGBA-5 mufflers by pulling forward (attached by Velcro)

Temporarily stow

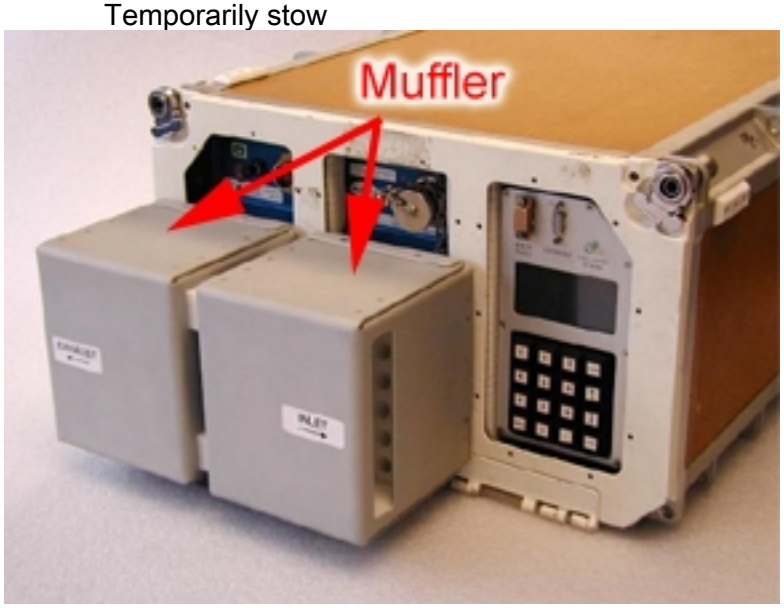

Figure 2. CGBA Muffler

2.4 Unlatch, open CGBA-5 locker door.

2.5 Grasp CGBA-5, pull unit out, open lid.

2.6 Insert NLP-Cells-3 Stow Bag inside, close lid.

2.7 Slide CGBA-5 into locker, close locker door, latch

3. CONNECT CGBA-5 CABLES

LAB1O1_A 1

3.1 ✓sw LOCKER-5 POWER-J1 – OFF (Lt off)

CGBA-5

3.2 ✓cb MAIN POWER – Open

3.3 EXPRESS Rack Power Cable →|← POWER-IN 28 VDC J1

3.4 EXPRESS Rack Data Cable→|← EXPRESS DATA J4

3.5 Attach CGBA-5 mufflers

4. APPLY POWER TO CGBA-5

LAB1O1_A 1

4.1 sw LOCKER-5 POWER-J1 → ON (Lt on)

CGBA-5

4.2 cb MAIN POWER → Close

Verify LED-MAIN POWER – On

5. CGBA-5 CHECK OUT

5.1 Verify CGBA-5 fan running (check airflow at EXHAUST)

5.2 Verify CGBA-5 display indicates as follows (any values acceptable):

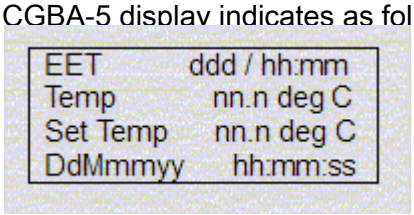

Figure 3. CGBA Time and Temp

6. DISCONNECT CGBA-4 CABLES

LAB1O2_A1 6.1 sw LOCKER-1 POWER-J1 → OFF (lt off)

CGBA-4 6.2 cb MAIN POWER → Open

6.3 Remove CGBA mufflers and temporarily stow

6.4 EXPRESS Rack Power Cable ←|→POWER-IN 28 VDC J1

6.5 EXPRESS Rack Data Cable ←|→EXPRESS DATA J4

6.6 Tether Cables out of the way as needed

7. CGBA-4 REMOVAL FROM EXPRESS LOCKER

7.1 Unlatch, open locker door.

7.2 Grasp CGBA-4, pull unit out of locker using side handles.

7.3 Remove CGBA-4 Restraint System from left side, inside Nomex cover.

Temporarily stow CGBA-4.

Reference Figure 4.

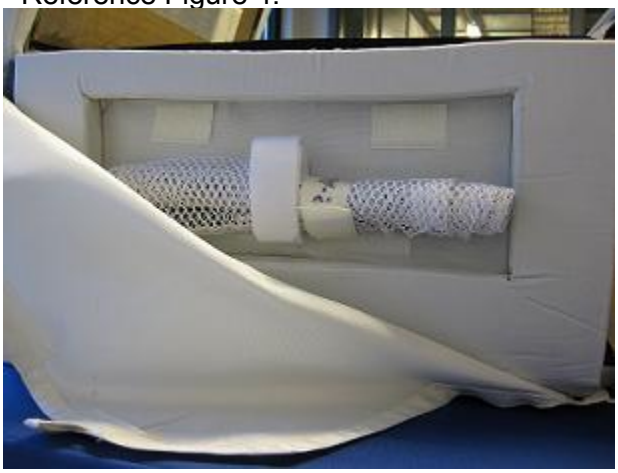

Figure 4. CGBA Restraint System Stowed

7.4 Stow CGBA-4 Restraint System inside CGBA-6 Nomex cover, left side.

7.5 Slide CGBA-6 into locker, close locker door, and latch.

8. CONNECT CGBA-6 CABLES

LAB1O2_A1 8.1 ✓sw LOCKER-1 POWER-J1 – OFF (lt off)

CGBA-6 8.2 ✓cb MAIN POWER – Open

8.3 EXPRESS Rack Power Cable →|←POWER-IN 28 VDC J1

8.4 EXPRESS Rack Data Cable →|←EXPRESS DATA J4

8.5 Attach CGBA mufflers

9. PLACE CB/SW IN ON POSITION

NOTE
CGBA-6 will not power on. The ground will power on CGBA-6 at a later time.

LAB1O2_A1 9.1 sw LOCKER-1 POWER-J1 → ON (lt off)

CGBA-6 9.2 cb MAIN POWER → Close

10. CGBA-4 TRANSFER AND INSTALL IN MIDDECK

10.1 Transfer CGBA-4 to middeck

WARNING
CGBA must be inserted with both latches closed for safe entry.

MF71E 10.2 Slide CGBA-4 into locker, close locker door, and close both latches.

10.3 Notify **MCC-H** CGBA Swap complete.

1. SETUP

Configure Cameras and overlays as required.

Monitor 1	Monitor 2	Monitor 3	SSC 1 (MON 1)	SSC 2 (DTV)
09: P1 Lower Outboard (+80, +15) 71: Camera B (-15, +50)	24: Tip Elbow (+10, +10)	72 (DNLK): SRMS Elbow (+90, +55) HFOV = 20	Camera C (-30, +45)	OBSS ITVC (+95, -90)

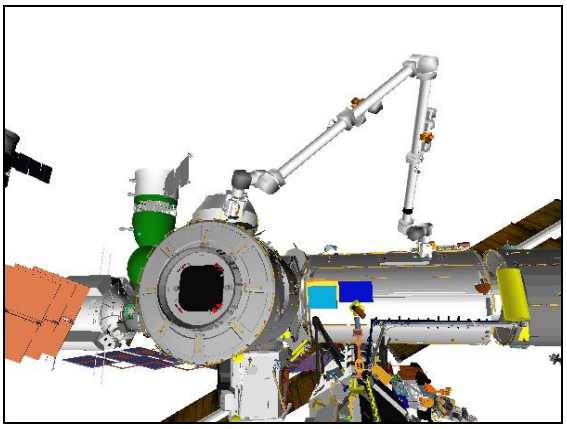

Figure 1.- Cupola Installed
(09: P1 Lower Outboard: +80, +15).

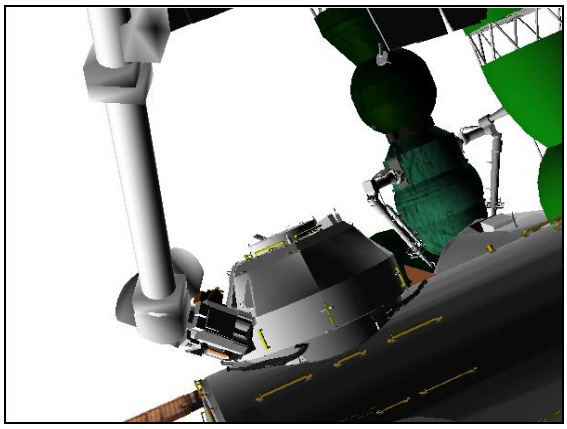

Figure 2.- Cupola Installed
(72: SRMS Elbow: +90, +55)
HFOV = 20 deg.

PCS MSS: SSRMS: Thrusters: Thruster Controls for MSS Ops

Verify 'Desat Request:' – Inh

****
*If using shuttle attitude control, verify DAP: FREE
****

DCP BRAKES SSRMS → ON (Verify ON)

Notify CBM operator: "SSRMS brakes on. GO for demate."

PCS MSS: SSRMS: SSRMS

Verify Loaded Parameters – √
Verify 'Loaded Parameters' (two) – Cupola Install CBCS, SY Held

Verify Display – Node3>Cupola Install CBCS

Verify Command – SSRMS>Internal

Expected Cupola Install position:

SR	SY	SP	EP	WP	WY	WR
+40.8	+170.0	+184.0	+112.4	-128.3	-169.2	+108.7
X	Y	Z	Pitch	Yaw	Roll	
0	0	0	0.0	0.0	0.0	
FOR	Loaded – Cupola Install CBCS, SY Held					
Disp	Node3>Cupola Install CBCS					

2. MANEUVERING TO DEMATE POSITION
On CBM operator: "Latches deployed. GO for Cupola Deberth."

DCP BRAKES SSRMS → OFF (Verify OFF)

PCS MSS: SSRMS: SSRMS

√Vernier

Enter Mode – Manual (Verify blue)

MSS: SSRMS: SSRMS Manual: Joint Lock: Joint Lock

cmd Shoulder Yaw (Verify SY – Locked)

THC/ RHC Maneuver Cupola to Demate position (within 5 cm/1 deg).
(+X, THC push)

	Locked					
SR	SY	SP	EP	WP	WY	WR
+31.7	+170.0	+174.6	+108.1	-117.8	-171.3	+99.9
X	Y	Z	Pitch	Yaw	Roll	
+200	0	0	0.0	0.0	0.0	
FOR	Loaded – Cupola Install CBCS, SY Held					
Disp	Node3>Cupola Install CBCS					

PCS MSS: SSRMS: SSRMS

Enter Mode – Standby (Verify blue)

```
*****************************************************************************
*  If using shuttle attitude control and attitude maintenance required
*  |  DAP:  LVLH
*  |
*  |  When rates damped
*  |  |  DAP:  FREE > 2 seconds
*  |  |  DAP:  AUTO
*  |  |
*  |  |  When in attitude and rates damped
*  |  |     DAP:  FREE
*****************************************************************************
```

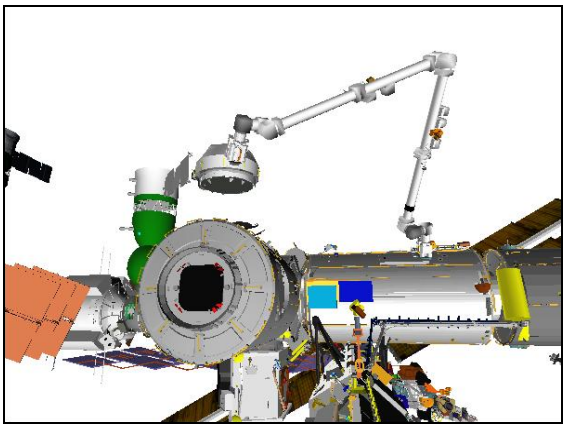

Figure 3.- Demate
(09: P1 Lower Outboard: +80, +15).

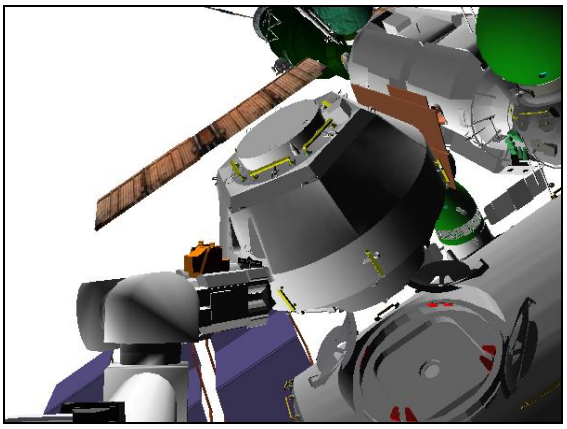

Figure 4.- Demate
(24: Tip Elbow: +10, +10).

3. FOR OCAS SETUP

MSS: SSRMS: SSRMS

Change Loaded Parameters ▶ Cupola ▶ Cupola Demate SYH
Verify 'Loaded Parameters' (two) – Cupola Demate, SY Held

Change Display ▶ Node3 ▶ Cupola Demate (Verify Node3>Cupola Demate)

Verify SSRMS at Demate position (within 5 cm/1 deg).

SR	SY	SP	EP	WP	WY	WR
+31.7	+170.0	+174.6	+108.1	-117.8	-171.3	+99.9
X	Y	Z	Pitch	Yaw	Roll	
0	+211	+400	0.0	0.0	-90.0	
FOR	Loaded – Cupola Demate, SY Held					
Disp	Node3>Cupola Demate					

4. FOR OCAS MANEUVER TO INTERMEDIATE POSITION

RHC RATE → COARSE (Verify Coarse on PCS)

PCS MSS: SSRMS: SSRMS

Enter Mode – FOR OCAS (Verify blue)

MSS: SSRMS: SSRMS FOR OCAS: Joint Lock: Joint Lock

cmd Shoulder Yaw (Verify SY – Locked)

SSRMS FOR OCAS

pick File ▶ Cupola ▶ Intermediate

Verify 'FOR' 'Destination' for Intermediate position.

X	Y	Z	Pitch	Yaw	Roll
0	-250	+450	0.0	0.0	-45.0

cmd Load (Verify Sequence Status – Confirm or Cancel)

MON Verify FOR and errors are correct on FOR Position overlay.

	X	Y	Z	Pitch	Yaw	Roll
FOR	0	+211	+400	0.0	0.0	-90.0
TGT	**0**	**-250**	**+450**	**0.0**	**0.0**	**-45.0**
ERR	0	+461	-50	0	0	-45.0

****
* If FOR or errors are incorrect
PCS * **cmd** Cancel (Verify Sequence Status – Waiting Destination)
*
* Input correct Dest FOR per table above.
*
* **cmd** Load (Verify Sequence Status – Confirm or Cancel)
*
MON * Verify FOR and errors are correct on FOR Position overlay.
****

PCS **cmd** Confirm (Verify Sequence Status – Auto Seq sw - Hot)

DCP AUTO SEQ → PROC

PCS MSS: SSRMS: SSRMS

Verify Posn Hold – orange

Verify SSRMS at Intermediate position (within 5 cm/1 deg).

	Locked					
SR	SY	SP	EP	WP	WY	WR
+52.0	+170.0	+200.4	+58.3	-51.4	-139.4	+118.4
X	Y	Z	Pitch	Yaw	Roll	
0	-250	+450	0.0	0.0	-45.0	
FOR	Loaded – Cupola Demate, SY Held					
Disp	Node3>Cupola Demate					

DCP BRAKES SSRMS → ON (Verify ON)

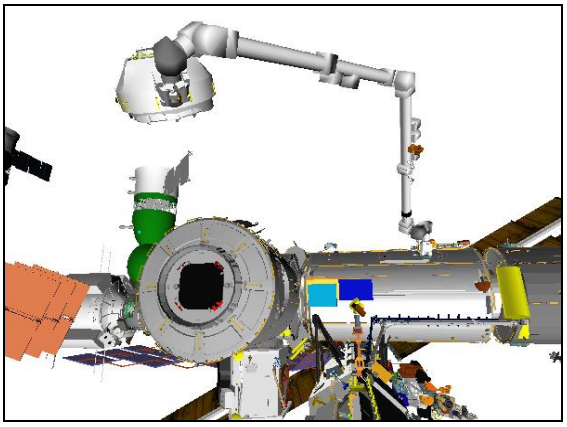

Figure 5.- Intermediate
(09: P1 Lower Outboard: +80, +15).

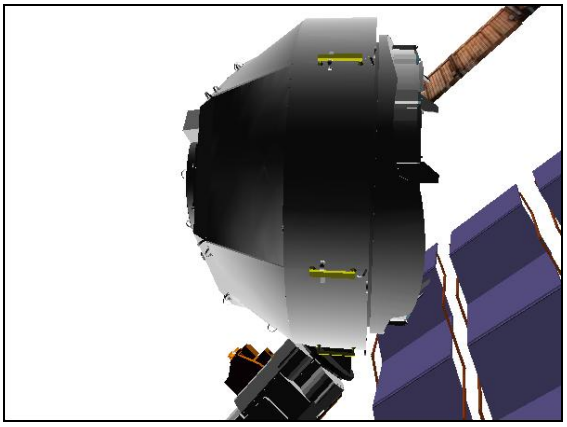

Figure 6.- Intermediate
(24: Tip Elbow: +10, +25).

5. CUPOLA PASSIVE CBM SURVEY

NOTE

1. A.6 PASSIVE CBM INSPECTION REFERENCE (SODF: S&M: REFERENCE: CBM) provides detailed inspection and acceptance criteria as well as data on historically accepted debris or damage.

2. **MCC-H** will coordinate to record the CBM survey on-board if Ku LOS.

DCP/ MON Configure Cameras as required.

Monitor 3
07: P1 Lower Inboard (-35, +40)

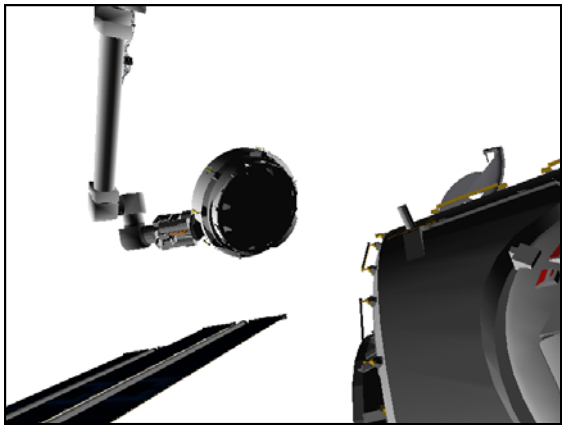

Figure 7.- CBM Survey
(07: P1 Lower Inboard: -35, +40).

Inspect the CBM ring using the P1 Lower Inboard Camera to verify ring and seal are clear of FOD by performing A.6 PASSIVE CBM INSPECTION REFERENCE, all (SODF: S&M: REFERENCE: CBM), then:

If any verifications in A.6 procedure are not met, √**MCC-H**.

Notify **MCC-H** when survey is completed.

6. FOR OCAS MANEUVER TO N3P PRE-INSTALL
Configure Cameras and overlays as required.

Monitor 1	Monitor 2	Monitor 3	SSC 1 (MON 1)	SSC 2 (DTV)
09: P1 Lower Outboard (+80, +15)	24: Tip Elbow (+10, +25)	07: P1 Lower Inboard (-35, +40)	SRMS Elbow (+85, +40)	OBSS ITVC (+70, -95)

DCP BRAKES SSRMS → OFF (Verify OFF)

PCS MSS: SSRMS: SSRMS

Enter Mode – FOR OCAS (Verify blue)

MSS: SSRMS: SSRMS FOR OCAS: Joint Lock: Joint Lock

cmd Shoulder Yaw (Verify SY – Locked)

SSRMS FOR OCAS

Input ‘FOR’ ‘Destination’ for N3P Pre-Install position.

X	Y	Z	Pitch	Yaw	Roll
0	-200	0	0.0	0.0	0.0

cmd Load (Verify Sequence Status – Confirm or Cancel)

MON Verify FOR and errors are correct on FOR Position overlay.

	X	Y	Z	Pitch	Yaw	Roll
FOR	0	-250	+450	0.0	0.0	-45.0
TGT	**0**	**-200**	**0**	**0.0**	**0.0**	**0.0**
ERR	0	-50	+450	0.0	0.0	-45.0

```
*****************************************************************************
* If FOR or errors are incorrect
PCS  *  cmd Cancel (Verify Sequence Status – Waiting Destination)
     *
     *  Input correct Dest FOR per table above.
     *
     *  cmd Load (Verify Sequence Status – Confirm or Cancel)
     *
MON  *  Verify FOR and errors are correct on FOR Position overlay.
*****************************************************************************
```

PCS **cmd** Confirm (Verify Sequence Status – Auto Seq Sw-Hot)

DCP AUTO SEQ → PROC

PCS MSS: SSRMS: SSRMS

Verify Posn Hold – orange

Verify SSRMS at N3P Pre-Install position (within 5 cm/1 deg).

SR	SY	SP	EP	WP	WY	WR
+63.6	+170.0	+228.4	+59.1	-17.3	-130.4	+150.0
X	Y	Z	Pitch	Yaw	Roll	
0	-200	0	0.0	0.0	0.0	
FOR	Loaded – Cupola Demate, SY Held					
Disp	Node3>Cupola Demate					

MSS: SSRMS: SSRMS

Enter Mode – Standby (Verify blue)

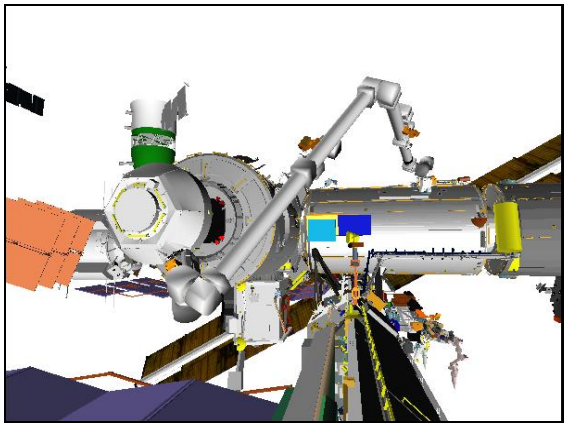

Figure 8.- N3P Pre-Install
(09: P1 Lower Outboard: +80, +5).

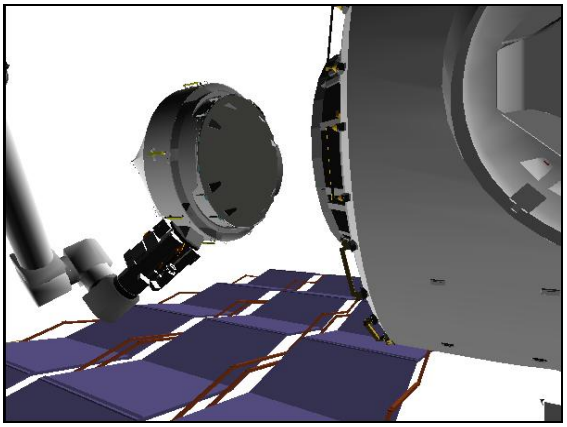

Figure 9.- N3P Pre-Install
(07: P1 Lower Inboard: -30, 0).

7. SETUP FOR MANEUVER TO RTL POSITION

```
*****************************************************************************
*  If using shuttle attitude control and attitude maintenance required
*  |  DAP:  LVLH
*  |
*  |  When rates damped
*  |  |  DAP:  FREE > 2 seconds
*  |  |  DAP:  AUTO
*  |  |
*  |  |  When in attitude and rates damped
*  |  |     DAP:  FREE
*****************************************************************************
```

On CBM operator, “GO for maneuver to Ready-to-Latch position.”

NOTE
The current video software load does not recognize the Node 3 video components. Coordinate with **MCC-H** for routing of the Node 3 CBCS Camera.

Configure Cameras and overlays as required.

Monitor 1	Monitor 2	Monitor 3	SSC 1 (MON 1)	SSC 2 (DTV)
09: P1 Lower Outboard (+80, +5)	XX: CBCS	24: Tip Elbow (+15, +35) 07: P1 Lower Inboard (-30, 0)	SRMS Elbow (+85, +40)	Camera B (-15, +45)

Verify CBCS setup is complete. (CBCS Camera Tail pointing Station Forward)

Node 3: S&M: Port CBM: RTL Details

Monitor CBM RTLs using PCS.

RHC RATE → VERNIER (Verify Vernier on PCS)

PCS MSS: SSRMS: Rate: SSRMS Rate

Set 'Scale' 'Vernier' Rate Scale: as desired

√**MCC-H** for availability of SSRMS Snapshot Display Frame

If SSRMS Snapshot Display Frame is available
| Go to Step 8

If SSRMS Snapshot Display Frame is not available
| Go to Step 9

8. MANEUVERING TO RTLS USING SNAPSHOT DISPLAY FRAME

PCS MSS: SSRMS: SSRMS

Change Loaded Parameters ▶ Cupola ▶ Cupola Install CBCS SYH
Verify 'Loaded Parameters' (two) – Cupola Install CBCS, SY Held

Change Display ▶ SSRMS ▶ Snapshot (Verify SSRMS>Snapshot)

Verify Command – SSRMS>Internal

Verify SSRMS at N3P Pre-Install position (within 5 cm/1 deg).

SR	SY	SP	EP	WP	WY	WR
+63.6	+170.0	+228.4	+59.1	-17.3	-130.4	+150.0
X	Y	Z	Pitch	Yaw	Roll	
+200	0	0	0.0	0.0	0.0	
FOR	Loaded – Cupola Install CBCS, SY Held					
Disp	SSRMS>Snapshot					

Enter Mode – Manual (Verify blue)

MSS: SSRMS: SSRMS Manual: Joint Lock: Joint Lock

cmd Shoulder Yaw (Verify SY – Locked)

THC/ RHC

Maneuver Cupola until RTL (four) – green (-X, THC pull)
Expected Cupola RTL position:

	Locked					
SR	SY	SP	EP	WP	WY	WR
+61.3	+170.0	+222.7	+79.7	-32.6	-128.2	+150.0
X	Y	Z	Pitch	Yaw	Roll	
+12	0	0	0.0	0.0	0.0	
FOR	Loaded – Cupola Install CBCS, SY Held					
Disp	SSRMS>Snapshot					

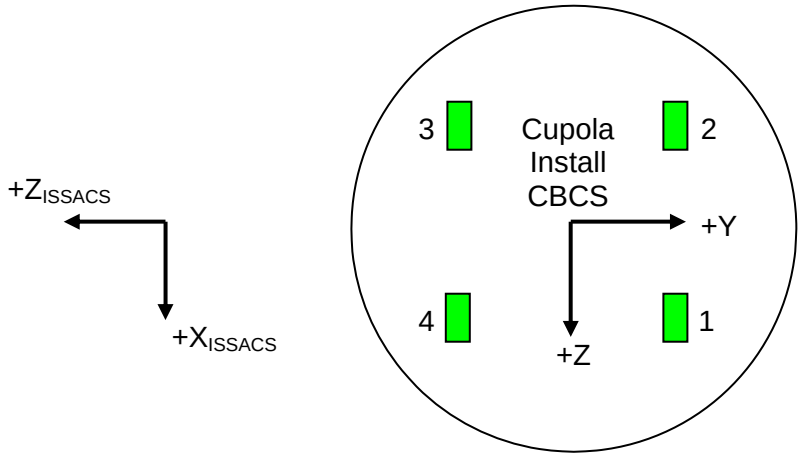

Figure 10.- Cupola Install CBCS RTL Diagram.

Table 1. Cupola Install CBCS Missing RTL Configuration
(Refer to Figure 10).

Missing RTLs	RHC Input*
1	-Pitch, +Yaw
2	+Pitch, +Yaw
3	+Pitch, -Yaw
4	-Pitch, -Yaw
1,2	+Yaw
3,4	-Yaw
1,4	-Pitch
2,3	+Pitch

* All inputs with respect to Cupola Demate FOR.

PCS

MSS: SSRMS: SSRMS

Verify Posn Hold – orange

Verify RTL (four) – green

Enter Mode – Standby (Verify blue)

Notify CBM operator: “Maneuver to RTL complete.”

Go To step 10

9. MANEUVER TO RTLS USING CUPOLA DEMATE DISPLAY FRAME

PCS MSS: SSRMS: SSRMS

Verify 'Loaded Parameters' (two) – Cupola Demate, SY Held

Verify Display – Node3>Cupola Demate

Change Command ▶ Node3 ▶ Cupola Demate (Verify Node3>Cupola Demate)

Enter Mode – Manual (Verify blue)

MSS: SSRMS: SSRMS Manual: Joint Lock: Joint Lock

cmd Shoulder Yaw (Verify SY – Locked)

THC/ RHC Maneuver Cupola until RTL (four) – green (+Y, THC right)
Expected Cupola RTL position:

	Locked					
SR	SY	SP	EP	WP	WY	WR
+61.3	+170.0	+222.7	+79.7	-32.6	-128.2	+150.0
X	Y	Z	Pitch	Yaw	Roll	
0	-12	0	0.0	0.0	0.0	
FOR	Loaded – Cupola Demate, SY Held					
Disp	Node3>Cupola Demate					

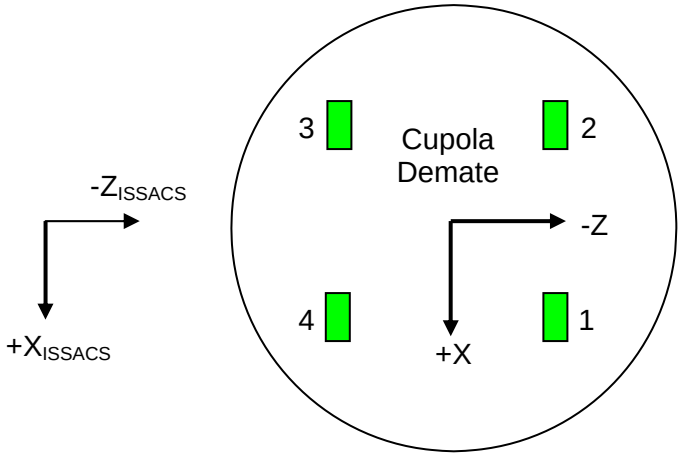

Figure 11.- Cupola Demate RTL Diagram.

Table 2. Cupola Demate Missing RTL Configuration
(Refer to Figure 11).

Missing RTLs	RHC Input*
1	+Roll, +Yaw
2	+Roll, -Yaw
3	-Roll, -Yaw
4	-Roll, +Yaw
1,2	+Roll
3,4	-Roll
1,4	+ Yaw
2,3	- Yaw

* All inputs with respect to Cupola Demate FOR.

PCS MSS: SSRMS: SSRMS

Verify Posn Hold – orange

Verify RTL (four) – green

Enter Mode – Standby (Verify blue)

Notify CBM operator: “Maneuver to RTL complete.”

10. POST FIRST STAGE CAPTURE
On CBM operator, “GO for SSRMS mode to Limp.”

NOTE
Following SSRMS mode to Limp, closed RTLs may open due to RTL spring forces. RTL closed indication is not required prior to execution of second stage capture (for latches used during first stage capture).

MSS: SSRMS: Limp: SSRMS Limp

cmd All Limp (Verify Limp – blue)

MSS: SSRMS: SSRMS

Verify all joints – Limped

WARNING
If SSRMS fails to brakes-on from limp mode, continuation of Second Stage Capture may cause structural failure of SSRMS or primary structure. If CBM stops unexpectedly (and Cmd Code changes to ‘**Stop**’) or SSRMS safes during Second Stage Capture, √**MCC-H** before proceeding.

Notify CBM operator: “SSRMS Mode to Limp complete. GO for Second Stage Capture.”

11. POST SECOND STAGE CAPTURE
On CBM operator, “GO for SSRMS Brakes ON.”

DCP BRAKES SSRMS → ON (Verify ON)

Expected Cupola Install position (For either FOR/Display Frame Config)

SR	SY	SP	EP	WP	WY	WR
+61.1	+170.0	+222.5	+80.8	-33.5	-128.0	+150.0
X	Y	Z	Pitch	Yaw	Roll	
0	0	0	0.0	0.0	0.0	

MSS: SSRMS: Rate: SSRMS Rate

Set ‘Scale’ ‘Vernier’ Rate Scale: 1.0 (Verify 1.0)

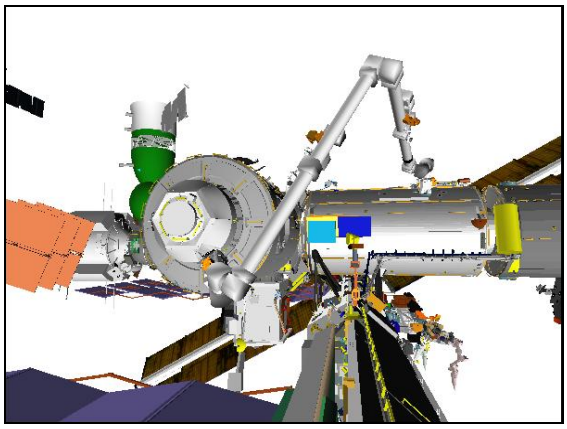

Figure 12.- Cupola Install
(09: P1 Lower Outboard: +80, +5).

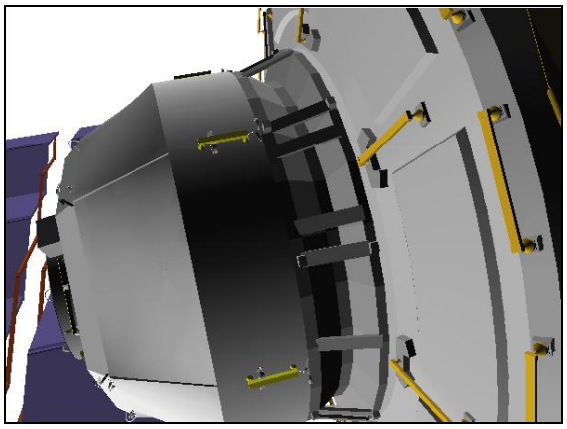

Figure 13.- Cupola Install
(24: Tip Elbow: +15, +35).

```
*****************************************************************************
*  If using shuttle attitude control and attitude maintenance required
*  |  DAP:  LVLH
*  |
*  |  When rates damped
*  |  |  DAP:  FREE > 2 seconds
*  |  |  DAP:  AUTO
*****************************************************************************
```

Data to be used with Step 8 of SSRMS Cupola Return to N3 Port.

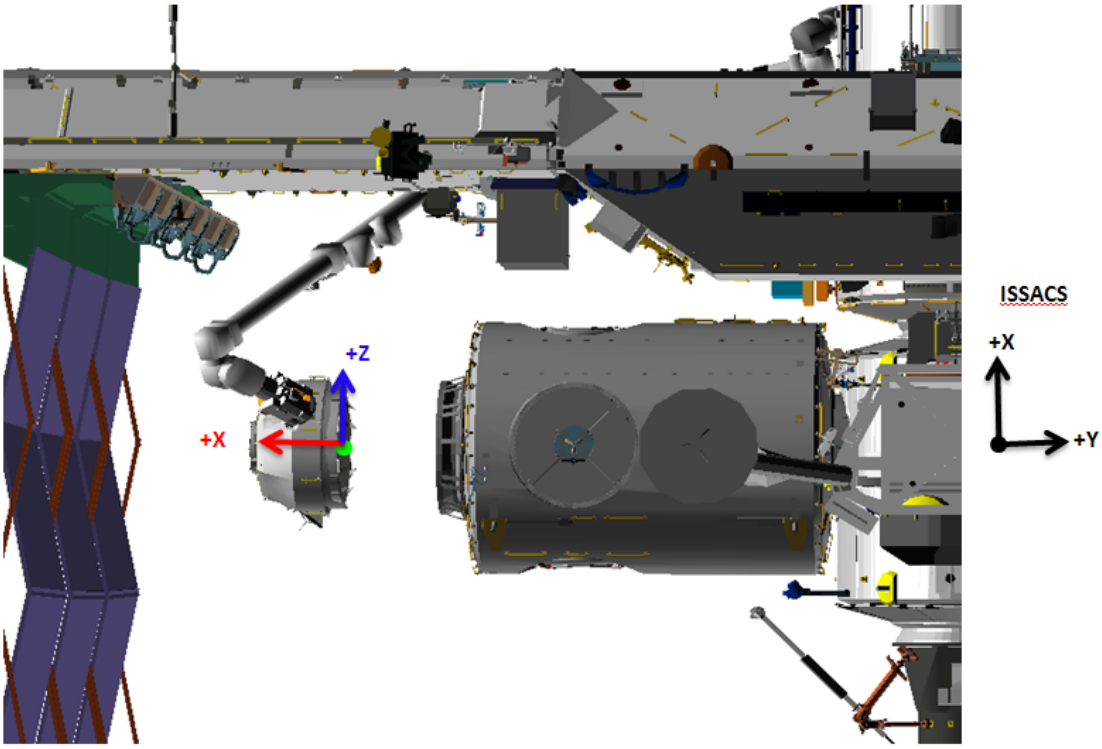

Figure 1.- Cupola, Node 3 Port, Snapshot Display Frame

Location: Cupola CBM interface origin (geometric center) when Cupola is fully mated to the Node 3 Port CBM.

Table 1. Cupola motion when:
FOR: Cupola Install CBCS, SY Held and DYF: Snapshot

HC Input	Cupola Motion		Digitals
	ISSACS	CBCS Visual	Snapshot
THC In	Port	Away From Camera	+X
THC Out	Starboard	Towards Camera	-X
THC Right	Zenith	Right in Camera	+Y
THC Left	Nadir	Left in Camera	-Y
THC Down	Forward	Down in Camera	+Z
THC Up	Aft	Up in Camera	-Z
Pitch Up	-Yaw	Top Towards Camera	+Pitch
Pitch Down	+Yaw	Bottom Towards Camera	-Pitch
Yaw Right	+Roll	Right Towards Camera	+Yaw
Yaw Left	-Roll	Left Towards Camera	-Yaw
Roll Right	-Pitch	Roll to Right (RTL 3 towards Right)	+Roll
Roll Left	+Pitch	Roll to Left (RTL 2 towards Left)	-Roll

Data to be used with Step 9 of SSRMS Cupola Return to N3 Port.

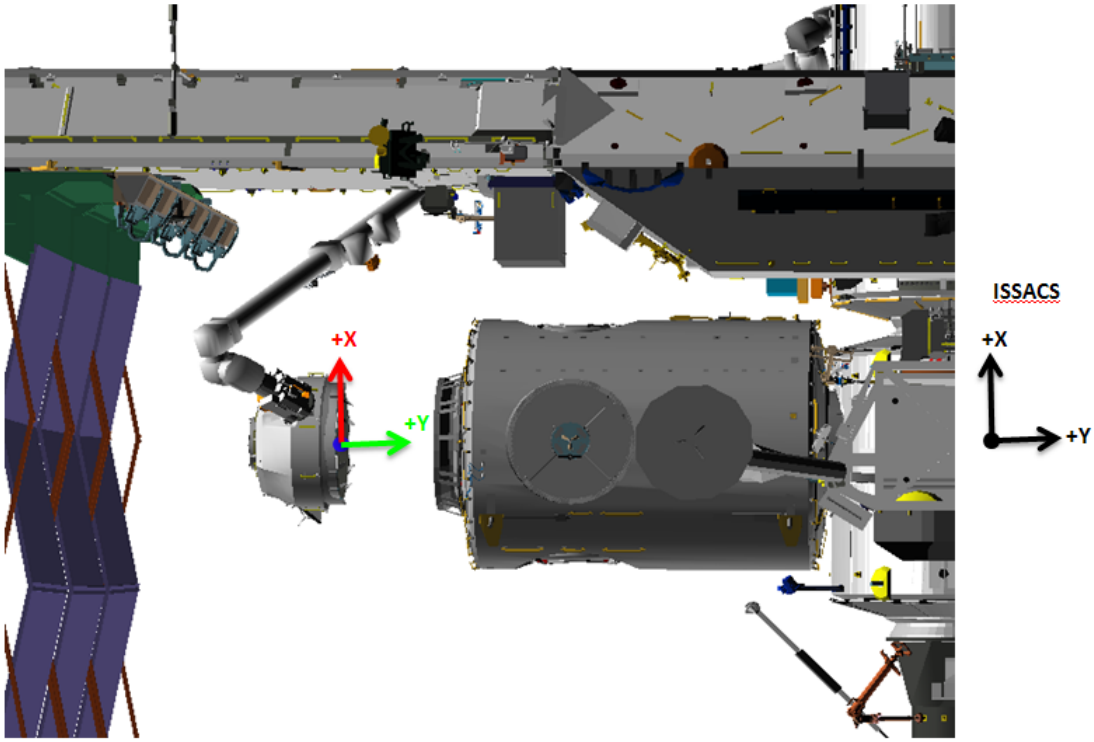

Figure 2.- Cupola, Node 3 Port, Cupola Demate Display Frame

Location: Cupola CBM interface origin (geometric center) when cupola is fully mated to the Node 3 Port CBM.
Orientation: Aligned with ISSACS when Cupola is fully mated to Node 3 Port CBM.

Table 2. Cupola motion when:
FOR: Cupola Demate, SY Held and DYF: Cupola Demate

HC Input	Cupola Motion		Digitals
	ISSACS	**CBCS Visual**	**Cupola Demate**
THC In	Forward	Down in Camera	+X
THC Out	Aft	Up in Camera	-X
THC Right	Starboard	Towards Camera	+Y
THC Left	Port	Away From Camera	-Y
THC Down	Nadir	Left in Camera	+Z
THC Up	Zenith	Right in Camera	-Z
Pitch Up	+Pitch	Roll to Left (RTL 2 towards Left)	+Pitch
Pitch Down	-Pitch	Roll to Right (RTL 3 towards Right)	-Pitch
Yaw Right	+Yaw	Bottom Towards Camera	+Yaw
Yaw Left	-Yaw	Top Towards Camera	-Yaw
Roll Right	+Roll	Right Towards Camera	+Roll
Roll Left	-Roll	Left Towards Camera	-Roll

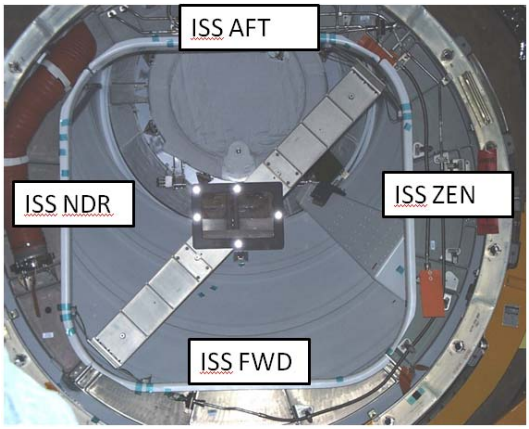

Figure 3.- Cupola CBCS Target Orientation, Installed on Node 3 Port

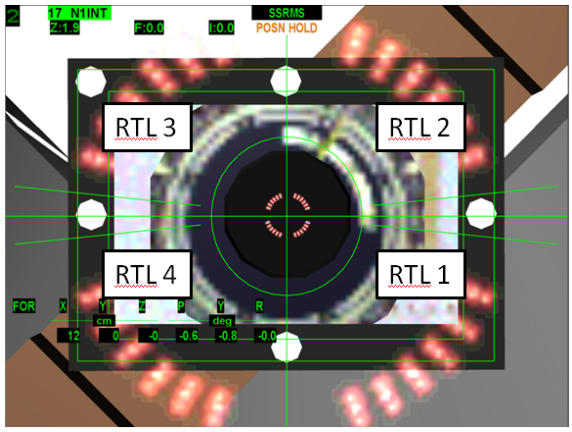

Figure 4.- Cupola CBCS Target Orientation, Installed on Node 3 Port

NOTE

- The FRGFs are located ISS Zenith and AFT with the grappled FRGF being ISS Zenith.
- ISS FWD should match CBCS +Z Input, ISS Zenith CBCS +Y (CBCS Tail FWD)