STS-130 / 20A

FD 05 Execute Package

MSG	Page(s)	Title
046A	1 - 14	FD05 Flight Plan Revision
047B	15 - 16	FD05 Mission Summary
048	---	Daily Summary (Electronic Only)
049	17 - 22	FD05 Transfer Message
050	23	FD05 Crew Choice Downlink
051	24 - 32	Stowage Locations for FD 05 (GMT 043)
052	33	IFM Tool Locker (MA16D) List
053A	34 - 40	CBCS Installation/Removal-Prep For 20A
054	---	IMMT Results - 2/11/10 (Electronic Only)

Approved by FAO:
L. Knowlton

Last Updated: Feb 11 2010 8:41 PM GMT
JEDI *(**J**oint **E**xecute package **D**evelopment and **I**ntegration), v3.0*

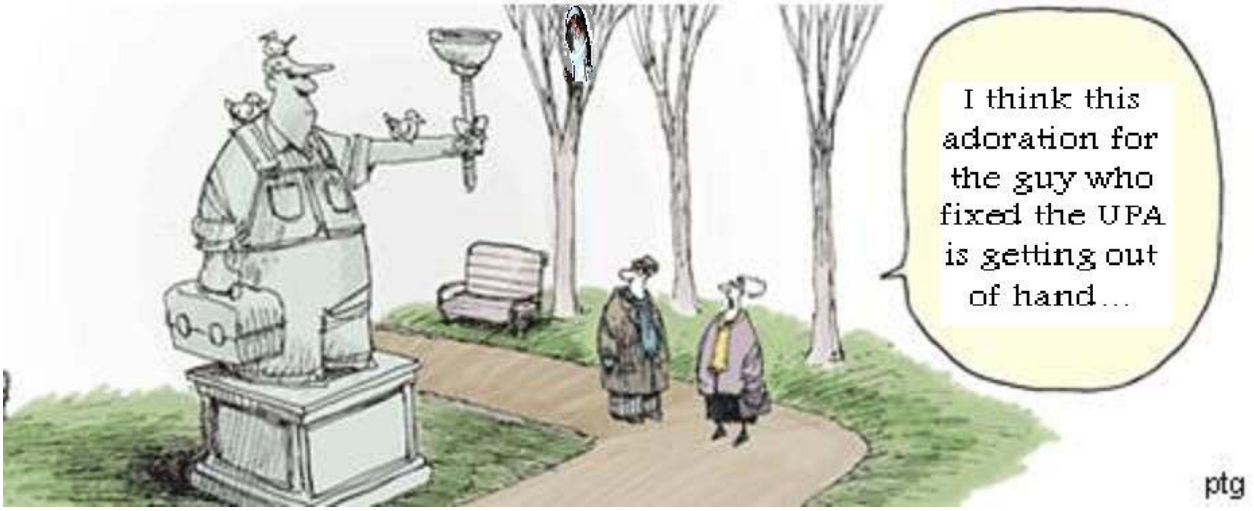

MSG INDEX

MSG NO.	TITLE
MSG-046	FD05 Flight Plan Revision
MSG-047	FD05 Mission Summary
MSG-048	Daily Summary
MSG-049	FD05 Transfer Message
MSG-050	FD05 Crew Choice Downlink
MSG-051	Stowage Locations for FD 05 (GMT 043)
MSG-052	IFM Tool Locker (MA16D) List
MSG-053	CBCS Installation/Removal-Prep For 20A
MSG-054	IMMT Results - 2/11/10

1. Post-Sleep Cryo Config

For today's Post-Sleep cryo config, O2 tanks 1, 3 & 4 will be active and H2 Tanks 1 and 4 will be active.

R1 O2,H2 MANF VLV TK1 (two) - OP (tb-OP)
O2 TK3 HTRS A,B (two) - AUTO

A11 CRYO TK4 HTRS O2 A,B (two) - AUTO

A15 CRYO TK5 HTR O2 A - OFF

Pre-Sleep Cryo Config

√MCC for deltas prior to configuring for Pre-Sleep.

For tonight's Pre-Sleep cryo config, Manifold 1 will be closed with O2 tanks 1 and 5 and H2 Tanks 1 and 4 active.

A15 CRYO TK5 HTR O2 A - AUTO

A11 CRYO TK4 HTRS O2 A,B (two) - OFF

R1 O2 TK3 HTRS A,B (two) - OFF
O2,H2 MANF VLV TK1 (two) - CL (tb-CL)

2. <u>OIU Troubleshooting using PCS</u>
   In order to break down the AFD PCS and set it back up again, the following procedures should be performed. Please notify MCC-H prior to performing this activity:

   1. US_SODF; JOINT OPERATIONS: 6.COMM/DATA; 2.303 PCS Deactivation; Steps 1-3, 5 (Disconnecting the Power Cables between the PDIP panel and the laptop is NOT required)
   2. Disconnect the 1553 PC Card from the Adapter Cable. Inspect for FOD, and reconnect the 1553 PC Card to the Adapter cable.
   3. Inspect connections for FOD or bent pins.
   4. US_SODF; JOINT OPERATIONS: 6.COMM/DATA; 6.107 PCS Setup-Shuttle; All
   5. If a PCS connection to the MDM is not established, please notify MCC-H and check for further actions.

   Pending the results of this troubleshooting, further troubleshooting may be requested by MCC and will be scheduled accordingly.

3. <u>Defer Post-Sleep LiOH Changeout</u>
   PPCO2 continues to track predicts. Therefore, as discussed preflight, a LiOH can changeout is not required this morning. MCC will continue to monitor PPCO2 levels to determine if a changeout is required during the day.

4. <u>IFM Tool Locker</u>
   Please reference MSG 052 for a list of pre-approved tools, available for use on ISS, as needed for assembly procedures. Tools must be returned to Endeavour prior to sleep each day.

5. <u>Outlook Mail Cleanup</u>
   The problems with the MUX prevent us from performing the OCA 48 Mbps reconfig. Post-undocking we will be using the 2 Mbps link to bring down your crew images, email (OSTs, PSTs), and IDC images from late inspection. To help us get all the items down prior to KU Stow, please keep your OSTs small by deleting your sent mail, inbox items and any unnecessary contacts. Also, keep those image cards coming by inserting them into a machine whenever possible and notifying MCC.

6. REPLACE PAGES 2-14 THROUGH 2-17 and 3-44 THROUGH 3-51.

NO UNISOLATED EXERCISE [DURING OTP REMOVAL]

NO EXERCISE [FROM PRE-INSTL UNTIL A-BOLTS COMPLETE]

NO ARED/T2 [WHEN SSRMS IN MOTION W/HEAVY P/L]

REPLANNED

FD05

GMT 02/11/10 (042) — 12, 13, 14, 15, 16, 17, 18, 19, 20, 21, 22, 23, 02/12, 01, 02, 03, 04, 05, 06, 07, 08, 09, 004/00

MET Day 003

STS-130	CDR ZAMKA	LOG; POST SLEEP; PMC A/G; HYG BRK/ HATCH CLS; EVA-PREP; EMU PURGE; EMU PREBREATHE; C_LK DPRS; PDPS; P/TV07 EVA OPS; PRLAG; P/TV07 EVA OPS; MEAL; CFWCL-I #6; CFWCL-I #7; CFWCL-I #8; P/TV07 EVA OPS; P-RPS; CRTKS; POST; EW/H2O
	PLT VIRTS	LOG; POST SLEEP; IMU; PAINHBT; P/TV07; EVA S/U; ARED; NODE 3 GRPL; XFER OPS; NODE 3 MNVR PREINSTL; NODE 3 MNVR TO RTL; LIMP; BRATCH; MEAL; DAP*; CWC-I XFER (3); H2O CWC SETUP
	MS1 HIRE	POST SLEEP; XFER; UPDATE; EXERCISE; NODE 3 GRPL; CBCS*; NODE 3 VESTIBULE; ACCESS; NODE 3 LK CK S/U; XFER OPS; NODE 3 MNVR PREINSTL; VERIFY; NODE 3 MNVR TO RTL; 1ST STG CAP; LIMP; 2ND STG CAP; BRACKE; BACKS^; MEAL; CBCS#; XFER OPS; N3 VEST LK CK PT1
	MS2 ROBINSON	POST SLEEP; MDDKCK; EXERCISE; EVA TOOL CHECK; PCS T/S; XFER OPS; PDPS; IVA SUPPORT; EVA 1 (6:30); P-RPS; XFER OPS
	MS3 PATRICK EV2	POST SLEEP; HYGIENE BREAK (14.7 RPRS, 10.2 DPRS); EVA-PREP; EMU PURGE; EMU PREBREATHE; C_LK DPRS; PDPS; EVA EGRS/ SETUP; NODE 3 PREP UNBERTH; NH3 BAG OPS; OTP REMOVAL; LTA CABLE INSTL; GET AHEAD; CLNUP & INGRS; P-RPS; CRTKS; POST; EW/H2O
	MS4 BEHNKEN EV1	POST SLEEP; HYGIENE BREAK; EVA-PREP; EMU PURGE; EMU PREBREATHE; C_LK DPRS; PDPS; EVA EGRS/ SETUP; NODE 3 PREP UNBERTH; NH3 BAG OPS; OTP REMOVAL; AVIONICS CABLE INSTL; GET AHEAD; CLNUP & INGRS; P-RPS; CRTKS; POST; EW/H2O
STS	DAY/NIGHT	
	ORBIT	56, 57, 58, 59, 60, 61, 62, 63, 64
	TDRS W E Z	
	ORB ATT	BIAS -XLV -ZVV
ISS	TDRS AVAIL	

*POWER UP @OPEN ^POWERDOWN *EDIT #TEMP STOW

NOTES

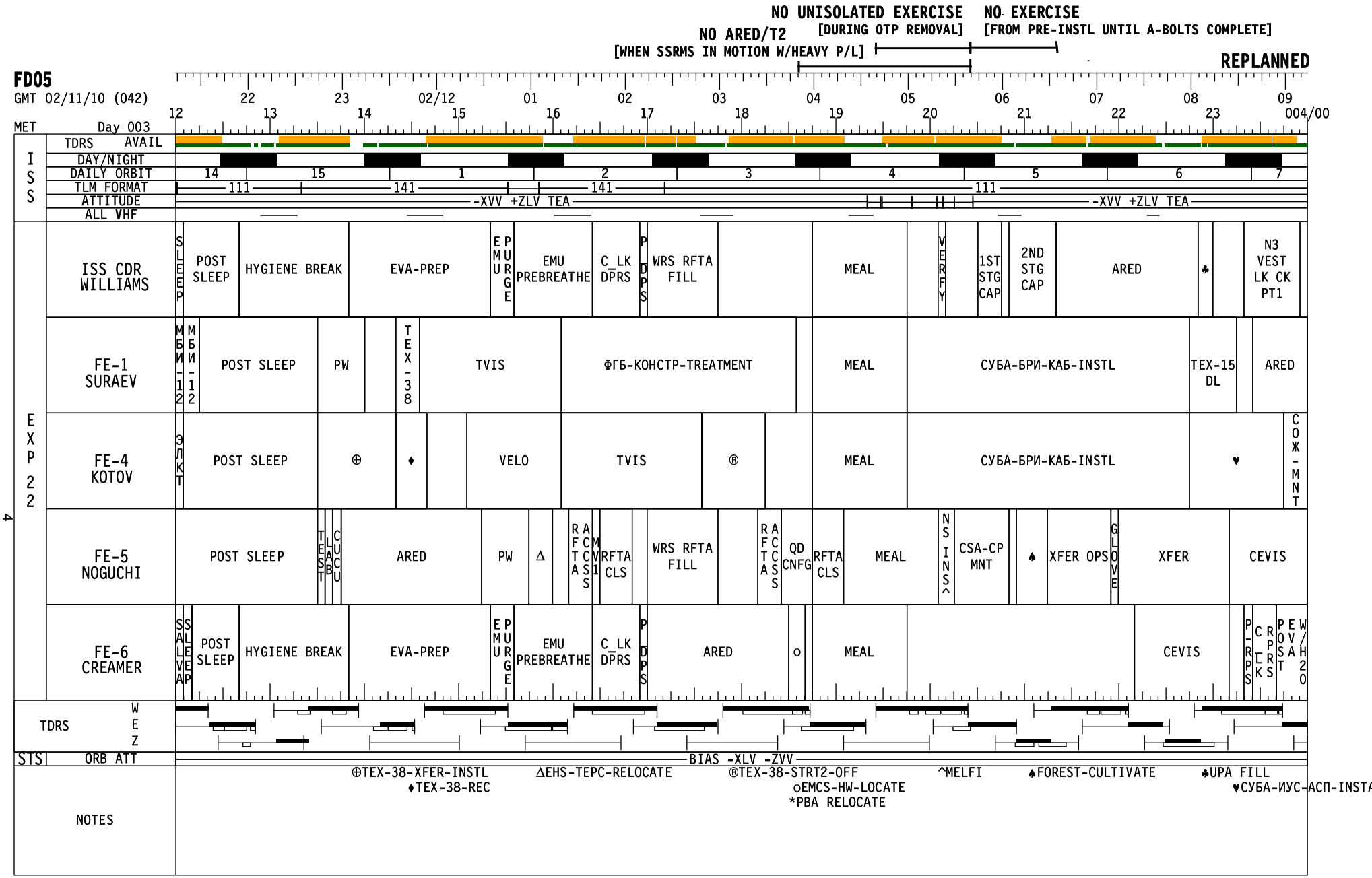
NO UNISOLATED EXERCISE [DURING OTP REMOVAL]
NO EXERCISE [FROM PRE-INSTL UNTIL A-BOLTS COMPLETE]
NO ARED/T2 [WHEN SSRMS IN MOTION W/HEAVY P/L]
REPLANNED
FD05
GMT 02/11/10 (042)
MET Day 003
12 22 13 23 14 02/12 15 01 16 02 17 03 18 04 19 05 20 06 21 07 22 08 23 09 004/00
ISS
TDRS AVAIL
DAY/NIGHT
DAILY ORBIT 14 15 1 2 3 4 5 6 7
TLM FORMAT 111 141 141 111
ATTITUDE -XVV +ZLV TEA -XVV +ZLV TEA
ALL VHF
EXP 22
ISS CDR WILLIAMS
SLEEP POST SLEEP HYGIENE BREAK EVA-PREP EMU PURGE EMU PREBREATHE C_LK DPRS PDPS WRS RFTA FILL MEAL VERFY 1ST STG CAP 2ND STG CAP ARED ♣ N3 VEST LK CK PT1
FE-1 SURAEV
МБИ-12 МБИ-12 POST SLEEP PW TEX-38 TVIS ФГБ-КОНСТР-TREATMENT MEAL СУБА-БРИ-КАБ-INSTL TEX-15 DL ARED
FE-4 KOTOV
ЭКТ POST SLEEP ⊕ ♦ VELO TVIS ® MEAL СУБА-БРИ-КАБ-INSTL ♥ СОЖ-МНТ
FE-5 NOGUCHI
POST SLEEP TEST LAB CUCU ARED PW Δ RFTA ACS CMV1 RFTA CLS WRS RFTA FILL RFTA ACS QD CNFG RFTA CLS MEAL NS INS^ CSA-CP MNT ♠ XFER OPS GLOVE XFER CEVIS
FE-6 CREAMER
SALEVA SLEEP POST SLEEP HYGIENE BREAK EVA-PREP EMU PURGE EMU PREBREATHE C_LK DPRS PDPS ARED ϕ MEAL CEVIS P-RPS CRPS PROST EV/SAT W/H2O
TDRS W E Z
STS ORB ATT BIAS -XLV -ZVV
NOTES
⊕TEX-38-XFER-INSTL
♦TEX-38-REC
ΔEHS-TEPC-RELOCATE
®TEX-38-STRT2-OFF
ϕEMCS-HW-LOCATE
*PBA RELOCATE
^MELFI
♠FOREST-CULTIVATE
♣UPA FILL
♥СУБА-ИУС-АСП-INSTA

REPLANNED

FD05

GMT 02/12/10 (043)

MET Day 004

004/00 10 01 11 02 12 03 13 04 14 05 15 06 16 07 17 08 18 09 19 10 20 11 21 12

STS-130	CDR ZAMKA	POST EVA W/H2O; BSA INIT; PS; FD CONF; PMC A/G; PRE SLEEP; SLEEP
STS-130	PLT VIRTS	FLTR CLN - INSPECT; PRE SLEEP; SLEEP
STS-130	MS1 HIRE	N3 LK CK PT2; XFER TAG UP; XFER BRIEF; PRE SLEEP; SLEEP
STS-130	MS2 ROBINSON	XFER OPS; MDDK CK; PRE SLEEP; SLEEP
STS-130	MS3 PATRICK EV2	POST EVA W/H2O; PRE SLEEP; SLEEP
STS-130	MS4 BEHNKEN EV1	POST EVA W/H2O; PRE SLEEP; SLEEP
STS	DAY/NIGHT	
STS	ORBIT	64 65 66 67 68 69 70 71 72
STS	TDRS W E Z	
STS	ORB ATT	BIAS -XLV -ZVV
ISS	TDRS AVAIL	
	NOTES	

REPLANNED

FD05

GMT 02/12/10 (043)

MET Day 004

		004/00	01	02	03	04	05	06	07	08	09	10	11	12
ISS	TDRS AVAIL													
ISS	DAY/NIGHT													
ISS	DAILY ORBIT	7	8	9	10	11	12	13	14	15				
ISS	TLM FORMAT	111	122		122					112				
ISS	ATTITUDE	-XVV +ZLV TEA												
ISS	ALL VHF													
EXP 22	ISS CDR WILLIAMS		N3 LK CK PT2	CEVIS	PRE SLEEP-ISS	SLEEP								
EXP 22	FE-1 SURAEV	ARED	♣	PW	PRE SLEEP-ISS	SLEEP								
EXP 22	FE-4 KOTOV	COMM-NT	3KT	PW	PRE SLEEP-ISS	SLEEP								
EXP 22	FE-5 NOGUCHI	CEVIS	⊕	EVA*	PW	PRE SLEEP-ISS	SLEEP							
EXP 22	FE-6 CREAMER	POST EVA W/H20			PW	PRE SLEEP-ISS	SLEEP							
TDRS	W													
TDRS	E													
TDRS	Z													
STS	ORB ATT	BIAS -XLV -ZVV												

NOTES

♣TEX-15-DAKON-CK
⊕EHS-CSA-02-LBL-INST
*D/L

STS-130 FD05

GMT Date 02/11 (042) | W | T D R S E | Z | D/N | O R B | MET Day 003 | STS ATI

CDR ZAMKA

12:00 — SLEEP LOGBOOK (ORB OPS, SDBI)
POST-SLEEP ACTIVITY (ORB OPS, CREW SYS)

13:00 — PRIVATE MEDICAL CONFERENCE
L9 PAYLOAD STATION A/G (two) - OFF
Perform via A/G2

EVA SYSTEMS: 1.211 HYGIENE BREAK

BIAS - XLV - ZVV

EVA SYSTEMS: 1.216 EVA PREP

EVA SYSTEMS: 1.220 EMU PURGE

EVA SYSTEMS: 1.225 EMU PREBREATHE

PLT VIRTS

SLEEP LOGBOOK (ORB OPS, SDBI)
POST-SLEEP ACTIVITY (ORB OPS, CREW SYS)

IMU STAR OF OPPTY ALIGN (ORB OPS, GNC)
EVA 1 INHIBIT PAD (EVA, TIMELINES)

P/TV07 EVA (PHOTO/TV, SCENES)
Perform SETUP

MED OPS: 2.1.175 ARED - EXERCISE
Login as ARED Guest and refer to MSG 030 how to deviate using the ARED Display. Verify X-Rotation Dashpot Inspection Complete.

MS1 HIRE

POST-SLEEP ACTIVITY (ORB OPS, CREW SYS)

TRANSFER UPDATE
Ref. Transfer List & MSG 049

EXERCISE

FD05 EZ ACTIVITIES:
√OCAC FILTER & MDDK DUCT SCREEN
TEPC (STATUS CHECK) (ORB OPS, CREW SYS)
HARD REBOOT ALL PGSCs EXCEPT: STS-6(WLES),STS-5(RPOP2),& OCA ROUTER.
Return all Shuttle IFM tools used on ISS, per MSG 052, to Endeavour prior to sleep.

Notes

STS-130 FD05

GMT Date 02/11 (042) | W E | T D R S Z | D/N | O R B | MET Day 003 | STS ATI

MS2 ROBINSON | MS3 PATRICK | MS4 BEHNKEN | Notes

12:00 — 13:00 — 14:00 — 15:00 — 16:00

22:00 — 23:00 — 00:00 — 01:00

56 — 57 — 58 — 59

BIAS-XLV-ZVV

MS2 ROBINSON	MS3 PATRICK	MS4 BEHNKEN
POST-SLEEP ACTIVITY (ORB OPS, CREW SYS)	POST-SLEEP ACTIVITY (ORB OPS, CREW SYS)	POST-SLEEP ACTIVITY (ORB OPS, CREW SYS)
	EVA SYSTEMS: 1.211 HYGIENE BREAK	EVA SYSTEMS: 1.211 HYGIENE BREAK
	EVA SYSTEMS: 1.216 EVA PREP	EVA SYSTEMS: 1.216 EVA PREP
GLACIER STATUS CHECK (ASSY OPS,CC)		
EXERCISE		
EVA TOOL CHECK Ref. EVA 1 TOOL CONFIG (EVA, TIMELINES)	EVA SYSTEMS: 1.220 EMU PURGE	EVA SYSTEMS: 1.220 EMU PURGE
	EVA SYSTEMS: 1.225 EMU PREBREATHE	EVA SYSTEMS: 1.225 EMU PREBREATHE
AFT FD PCS TROUBLESHOOT Ref MSG 046,Item 2		

STS-130 FD05

GMT Date 02/12 (043) | W | T D R S E | Z | D/N | O R B | MET Day 003 | STS ATI

CDR ZAMKA

- 16:00 — EVA SYSTEMS: 1.225 EMU PREBREATHE
- EVA SYSTEMS: CREWLOCK DEPRESS/REPRESS (CC)
- 17:00 — EVA SYSTEMS: CREWLOCK POST DEPRESS (CC)
- P/TV07 EVA (PHOTO/TV, SCENES) Perform OPS
- 18:00 — ROBO: 1.220 SSRMS NODE 3 UNBERTH TO INSTL Steps 4-7 EXERCISE CONSTRAINTS
- P/TV07 EVA (PHOTO/TV, SCENES) Perform OPS
- 20:00

PLT VIRTS

- MED OPS: 2.1.175 ARED - EXERCISE Ref. pg 3-44
- ROBO: 1.210 SSRMS BERTHED NODE 3 GRAPPLE
- TRANSFER OPS Ref. Transfer List & MSG 049
- ROBO: 1.220 SSRMS NODE 3 UNBERTH TO INSTL Steps 1-13 EXERCISE CONSTRAINTS

MS1 HIRE

- EXERCISE
- ROBO: 1.210 SSRMS BERTHED NODE 3 GRAPPLE
- CBCS INSTL/RMVL-PREP FOR 20A (PWRUP) Ref. MSG 053, Verify cables connected per Figure 1,then steps 9,10.3-10.5
- 1.104 VESTIBULE OUTFITTING NOD1 TO NOD3 (ASSY OPS, ACT&C/O) Step 1.1
- 1.117 NODE 1/NODE 3 VEST PRESS & LEAK CK (ASSY OPS, ACT&C/O) Steps 1-4
- TRANSFER OPS Ref. Transfer List & MSG 049
- ROBO: 1.220 SSRMS NODE 3 UNBERTH TO INSTL Steps 1-13 EXERCISE CONSTRAINTS

Notes

- NO ARED/T2 WHEN SSRMS IN MOTION W/HEAVY PAYLOAD
- NO UNISOLATED EXERCISE DURING OTP REMOVAL

REPLANNED

STS-130 FD05

GMT Date 02/12 (043) | W | T D R S E | Z | D / N | O R B | MET Day 003 | STS ATI

MS2 ROBINSON | MS3 PATRICK | MS4 BEHNKEN | Notes

16:00 — 17:00 — 18:00 — 19:00 — 20:00

02:00 — 03:00 — 04:00 — 05:00

59 — 60 — 61

BIAS-XLV-ZVV

MS2 ROBINSON

- AFT FD PCS TROUBLESHOOT Ref MSG 046,Item 2
- TRANSFER OPS
  Ref. Transfer List & MSG 049
- EVA SYSTEMS: CREWLOCK POST DEPRESS (CC)
- IVA SUPPORT FOR EVA

MS3 PATRICK

- EVA SYSTEMS: 1.225 EMU PREBREATHE
- EVA SYSTEMS: CREWLOCK DEPRESS/REPRESS (CC)
- EVA SYSTEMS: CREWLOCK POST DEPRESS (CC)
- EVA 1 SETUP
- NODE 3 PREP UNBERTH
- NH3 BAG OPS
- OTP REMOVAL

MS4 BEHNKEN

- EVA SYSTEMS: 1.225 EMU PREBREATHE
- EVA SYSTEMS: CREWLOCK DEPRESS/REPRESS (CC)
- EVA SYSTEMS: CREWLOCK POST DEPRESS (CC)
- EVA 1 SETUP
- NODE 3 PREP UNBERTH
- NH3 BAG OPS
- OTP REMOVAL

Notes

- **NO ARED/T2 WHEN SSRMS IN MOTION W/HEAVY PAYLOAD**
- **NO UNISOLATED EXERCISE DURING OTP REMOVAL**

REPLANNED

STS-130 FD05

GMT Date 02/12 (043) | W E Z | DORNB | MET Day 003 | STS ATI

CDR ZAMKA

- 20:00 — P/TV07 EVA (PHOTO/TV, SCENES) Perform OPS
- 21:00 — MEAL
- CWC-I FILL (ORB OPS, CWC OPS) Fill #6 Ref. MSG 027
- CWC-I FILL (ORB OPS, CWC OPS) Fill #7 Ref. MSG 027
- 22:00 — CWC-I FILL (ORB OPS, CWC OPS) Fill #8 Ref. MSG 027
- P/TV07 EVA (PHOTO/TV, SCENES) Perform OPS
- 23:00 — EVA SYSTEMS: PRE REPRESS (CC)
- EVA SYSTEMS: CREWLOCK DEPRESS/REPRESS (CC)
- EVA SYSTEMS: 1.240 POST EVA Perform Water Recharge, No Metox Regen Ref. STS-130 Consumables Tracking CC(EVA) Ref. STS-130 Battery Recharge Plan (EVA)
- 00:00

PLT VIRTS

- ROBO: 1.220 SSRMS NODE 3 UNBERTH TO INSTL Steps 1-13, EXERCISE CONSTRAINTS
- ROBO: 1.220 SSRMS NODE 3 UNBERTH TO INSTL Step 14 EXERCISE CONSTRAINTS
- ROBO: 1.220 SSRMS NODE 3 UNBERTH TO INSTL Step 15 EXERCISE CONSTRAINTS
- ROBO:1.220 SSRMS N3 UNBRTH TO INSTLStep 16
- N1P HATCH LATCH [A]
- MEAL
- After NODE 3 INSTALL: √A/FREE/VERN Permanent DAP Edit: A11,A12,B12,B13:CA=7
- CWC-I TRANSFER Transfer 3 CWC-Is to ISS
- CWC FILL (ORB OPS, CWC OPS) Perform EQUIP PREP and WATER TRANSFER HOSE PURGE

MS1 HIRE

- ROBO: 1.220 SSRMS NODE 3 UNBERTH TO INSTL Steps 1-13, EXERCISE CONSTRAINTS
- S&M: 1.505 NODE 1 CBM VERIF PREMATE STATUS
- ROBO: 1.220 SSRMS NODE 3 UNBERTH TO INSTL Step 14 EXERCISE CONSTRAINTS
- S&M: 1.506 NODE 1 CBM CAPTURE/ABOLT Steps 1-4 EXERCISE CONSTRAINTS
- ROBO: 1.220 SSRMS NODE 3 UNBERTH TO INSTL Step 15 EXERCISE CONSTRAINTS
- S&M: 1.506 NODE 1 CBM CAPTURE/ABOLT Steps 5-end EXERCISE CONSTRAINTS
- ROBO:1.220 SSRMS N3 UNBRTH TO INSTLStep 16
- CBCS INSTL/RMVL-PREP FOR 20A (PWRDN) Ref. MSG 053, Step 11
- MEAL
- CBCS INSTL/RMVL-PREP FOR 20A (TEMP STOW) Ref. MSG 053, Step 12, In step 12.3, Node 1 Port Inner hatch window cover is temp-stowed at Node 2 AFT hatch window.
- TRANSFER OPS Ref. Transfer List & MSG 049
- On MCC GO: Verify Node 1 Port Hatch Latched, then: 1.117 NODE 1/NODE 3 VEST PRESS & LEAK CK (ASSY OPS, ACT&C/O) Steps 5-7.4 Leave ISA/VAJ setup connected to the Node 1 Port MPEV.

[A]
1. Verify Node 1 Port Ratchet in LATCH position.
2. Engage Crank Handle.
3. Turn Crank Handle in LATCH direction until fully latched.
4. Stow Crank Handle.

Notes

NO ARED/T2 WHEN SSRMS IN MOTION W/HEAVY PAYLOAD
NO UNISOLATED EXERCISE DURING OTP REMOVAL

NO EXERCISE FROM PRE-INSTL UNTIL A-BOLTS COMPLETE

REPLANNED

STS-130 FD05

GMT Date 02/12 (043) | W | T D R S E | Z | D/N | O R B | MET Day 003 | STS ATI

20:00 21:00 22:00 23:00 00:00

06:00 07:00 08:00 09:00

61 62 63 64

BIAS -XLV -ZVV

MS2 ROBINSON	MS3 PATRICK	MS4 BEHNKEN
IVA SUPPORT FOR EVA	OTP REMOVAL	OTP REMOVAL
	LTA CABLE INSTALL	AVIONICS CABLE INSTALL
	GETAHEAD	GETAHEAD
	EVA CLEANUP & INGRESS	EVA CLEANUP & INGRESS
EVA SYSTEMS: PRE REPRESS (CC)	EVA SYSTEMS: PRE REPRESS (CC)	EVA SYSTEMS: PRE REPRESS (CC)
TRANSFER OPS Ref. Transfer List & MSG 049	EVA SYSTEMS: CREWLOCK DEPRESS/REPRESS (CC)	EVA SYSTEMS: CREWLOCK DEPRESS/REPRESS (CC)
	EVA SYSTEMS: 1.240 POST EVA Perform Water Recharge, No Metox Regen Ref. STS-130 Consumables Tracking CC(EVA) Ref. STS-130 Battery Recharge Plan (EVA)	EVA SYSTEMS: 1.240 POST EVA Perform Water Recharge, No Metox Regen Ref. STS-130 Consumables Tracking CC(EVA) Ref. STS-130 Battery Recharge Plan (EVA)

Notes

NO ARED/T2 WHEN SSRMS IN MOTION W/HEAVY PAYLOAD

NO UNISOLATED EXERCISE DURING OTP REMOVAL

NO EXERCISE FROM PRE-INSTL UNTIL A-BOLTS COMPLETE

STS-130 FD05

GMT Date 02/12 (043) | W | TDRS E | TDRS Z | DO/N | ORB | MET Day 004 | STS ATI | BIAS-XLV-ZVV

GMT	MET	CDR ZAMKA	PLT VIRTS	MS1 HIRE	Notes
00:00		EVA SYSTEMS: 1.240 POST EVA Perform Water Recharge, No Metox Regen Ref. STS-130 Consumables Tracking CC(EVA) Ref. STS-130 Battery Recharge Plan (EVA)	FILTER CLEANING (IFM, SCHEDULED MAINTENANCE) Inspect filters and clean as necessary		
10:00				1.117 NODE 1/NODE 3 VEST PRESS & LEAK CK (ASSY OPS, ACT&C/O) Steps 7.6-9.5 Leave ISA/VAJ setup connected to the Node 1 Port MPEV. TRANSFER TAGUP Coordinate with transfer counterpart	
01:00		EVA SYSTEMS: 1.605 BSA BATTERY RECHARGE INITIATE Ref. STS-130 Consumables Tracking CC(EVA) Ref. STS-130 Battery Recharge Plan (EVA) PRE-SLEEP ACTIVITY (ORB OPS, CREW SYS)	PRE-SLEEP ACTIVITY (ORB OPS, CREW SYS) √ILLUMINATORS OFF - ALL	TRANSFER BRIEF Call down status to MCC PRE-SLEEP ACTIVITY (ORB OPS, CREW SYS)	
11:00		FLIGHT DIRECTOR CONFERENCE PRIVATE MEDICAL CONFERENCE L9 PAYLOAD STATION A/G (two) - OFF Perform via A/G2			
02:00		PRE-SLEEP ACTIVITY (ORB OPS, CREW SYS)			
12:00					
03:00					
13:00					
04:00			CREW WAKE AT 04/12:00		

REPLANNED

STS-130 FD05

GMT Date 02/12 (043) | W | T D R S E | Z | D / N | O R B | MET Day 004 | STS ATI

MS2 ROBINSON | MS3 PATRICK | MS4 BEHNKEN | Notes

00:00

TRANSFER OPS
Ref. Transfer List & MSG 049

EVA SYSTEMS: 1.240 POST EVA
Perform Water Recharge, No Metox Regen
Ref. STS-130 Consumables Tracking CC(EVA)
Ref. STS-130 Battery Recharge Plan (EVA)

EVA SYSTEMS: 1.240 POST EVA
Perform Water Recharge, No Metox Regen
Ref. STS-130 Consumables Tracking CC(EVA)
Ref. STS-130 Battery Recharge Plan (EVA)

64

10:00

GLACIER STATUS CHECK (ASSY OPS,CC)

01:00

PRE-SLEEP ACTIVITY
(ORB OPS, CREW SYS)

PRE-SLEEP ACTIVITY
(ORB OPS, CREW SYS)

PRE-SLEEP ACTIVITY
(ORB OPS, CREW SYS)

65

11:00

BIAS -XLV -ZVV

02:00

12:00

03:00

66

13:00

04:00

CREW WAKE AT 04/12:00

Good Morning Endeavour!!!!

The amount of transfer you have already accomplished is amazing!
Thanks for all of your extra effort!

Have a great room addition, EVA day!!!

YOUR CURRENT ORBIT IS: 188 X 182 NM

NOTAMS: NO CHANGES

EDW -	TEMP RWY IN USE. PERM RWY CLOSED FOR CONSTRUCTION.
EDW -	LAKEBED RWYS RED.
NOR -	LAKEBED RWYS USABLE. DRYING OUT.
DOV -	CLOSED.
FOK -	CLOSED.
WAL-	CLOSED.
ZZA -	ARRESTING NET INSTALLED 40M FROM END OF RWY 30L.
ESN -	RWY 03R/21L CLOSED. 03L/21R USABLE.
GUA -	RWY 06L/24R RWY END LIGHTS OTS.
PTN -	CLOSED FOR RUNWAY CONSTRUCTION.
IKF -	NOT USABLE. NO AGREEMENT.
BEN -	NOT RECOMMENDED/NOT SUPPORTED.

NEXT 2 PLS OPPORTUNITIES:

EDT22R	ORB 64 – 4/00:17	SKC	7	260/4P6
EDT22R	ORB 79 – 4/23:04	SKC	7	270/5P7

OMS TANK FAIL CAPABILITY:

L OMS FAILS: NO
R OMS FAILS: NO

LEAKING OMS PRPLT BURN:

L OMS LEAK: ALWAYS BURN RETROGRADE
R OMS LEAK: ALWAYS BURN RETROGRADE

OMS QUANTITIES(%)

L OMS	OX = 30.2	R OMS OX = 31.4
	FU = 29.9	FU = 31.2

Subtract interconnect counter for current OMS quantities.

DELTA V AVAILABLE:

OMS	320 FPS
ARCS (TOTAL ABOVE QTY1)	44 FPS
TOTAL IN THE AFT	364 FPS
ARCS (TOTAL ABOVE QTY2)	78 FPS
FRCS (ABOVE QTY 1)	31 FPS
AFT QTY 1	82 %
AFT QTY 2	44 %

SYSTEM	FAILURE	IMPACT	WORK AROUND
EVA	During EVA 1 Tool Config (GMT 042/06:37), the screw that holds the MWS EE on the MWS T-bar was found to be hand tight only with threads showing.	The loose screw could cause the MWS EE to come off, which has happened in the past. The MWS EE is used as a local tether and for worksite stablization.If unresolved, the EV crewmember would not have hardware they trained with, possibly effecting crew efficiency.	Spare T-BAR with MWS EE (s/n 1031) was located and used in place of original T-Bar with MWS EE (s/n 1030). Remember to stow EE on the MWS when not in use.

Good morning Kay, Terry, & Steve,

Wow, that calldown yesterday tells us that you must have really been paying attention in your transfer classes! You are now 43 percent complete overall, and ahead of schedule.

For today, you again have a day of open transfer time. We have provided words for Soichi's time so he can help with packing some of the more difficult ISS items. For the other time, you can continue working on resupply – you will probably finish all the resupply items you are able to do (others are constrained by activities). After that, continue with return as you have time available. You have shown that you are very capable of finding things ready to transfer!

As a heads up, the middeck bags are weight-limited (not volume-limited) so even though the bags may not look full as you are packing them for return, they cannot accommodate much more.

To follow up from our discussion yesterday, we did have a couple questions. We can get your answers to these in the Transfer Brief tonight.

The Transfer List Excel file, FD05_Transfer_List_STS130.xls, is located on the KFX machine in **C:\OCA-up\transfer** (and available via the **PGSC homepage**).

For ISS, the Transfer List Excel file, FD05_Transfer_List_STS130.xls, is located in **K:\OCA-up\transfer**.

<u>Questions/Comments for Kay</u>

1. You mentioned that you had a comment about the returning Food Warmer but we did not discuss it since we were coming up on ratty comm. I believe you were wondering about whether the item should be in a CTB as noted in the Transfer List. We were anticipating this item being transferred later, when a CTB would have already been there. A CTB will be arriving on FD06 via one of Jeff's activities, and the food warmer can be put inside that CTB at that time. (There will be other items going to this locker as well.)
2. ISS stowage location follow-ups:
    a. For items 5 and 13, you reported these stowed at JLP1A1_S. The "S" is not a known location for JLP1A1. Can you confirm where in the JLP these items were placed?
    b. For item 4, you reported this stowed at LAB1D6_K2. "K2" is not a known location in this rack. Can you confirm the location?

Change Pages
Please incorporate changes as follows:

In the Transfer List **RESUPPLY** tab
Pen and Ink the following page:
Resupply – 14:
For item 801: in the notes field, change “FD05” to “FD06”

In the Transfer List **RETURN** tab
Replace the following pages:
Return – 2, 6

Pen and Ink the following page:
Return – 7:
For item 732: in the notes field, change “FD11” to “FD10”
For item 735: in the notes field, change “FD05” to “FD06”

FD05 Choreography

- XFER OPS for Kay, Terry and Steve:
  - Robinson: Prep items needed for N3 vestibule outfitting (Items 6.1, 6.2, and 6.3). Move foam from these items per return items 716 and 717.
  - Complete CDRA bed swap (Items 8.1 and 608)
  - Complete resupply items 20, 28, and 38. This will complete all the resupply you are able to do (all other items are constrained by activities).
  - Work on return items per your preference

FD05 Choreography for Soichi

- Transfer items with special packing (Items 610, 611, 711, and 723)
- Some of these items contain Tox 2 fluid, and you will need to don PPE – Dust Mask, Silver Shield Gloves, and Goggles. You will find these items in CCPK s/n 1004 located in LAB1O5_D2. If the PPE items become contaminated, please let us know how many you used. If they do not become contaminated, you can restow them in their original location when complete with the packing activities.
- Note that Item 610 (the Pump/Separator Assy) has orientation requirements for return, so we have asked you to label the outside of the Hefty bag. This will allow the shuttle crew to verify orientation later in the mission.
- To reiterate the answer to the question yesterday, Pre-Treat Tank s/n 802025 is the only one returning on 20A (please leave 802023 on ISS).

Have a great day!

- The 20A Transfer Team

20A Transfer Choreography

FD06 (no xfer brief)

- Williams: Transfer GSC per EHS-N3 AIR-SAMPLE activity (Item 719)
- Noguchi: Retrieve PEPS items from N3 CTBs per PEPS UNSTOW activity (Items 42.1 and 45.1)
- Creamer: Retrieve NPV and S0 cable from N3 CTB per EVA H/W UNSTOW activity (Items 48.1 and 48.2)
- Virts: Transfer LiOH between Node 3, Middeck, and ISS stockpile per LiOH TRANSFER activity (Items 44, 44.1, 48, 48.3, 802, 803, and 736)
- Hire: Begin to relocate D4 and D5 ISP CTBs per ISP STOWAGE TRANSFER activity
- Patrick: Transfer CGBAs per CGBA UNIT SWAP activity (Items 29 and 706)

FD07

- Virts & Hire: Relocate D4 and D5 ISP CTBs per ISP STOWAGE TRANSFER activity (Items 41, 42, 43, 45, 46, 47, 49, 49.1, and 50)
- XFER OPS:
    - Swap portable sample adapters (Items 801 and 735)

FD08

- Creamer: Transfer Node 3 ITCS sample per N3-LTL-ITCS-SAMPLE activity (Item 740)
- Behnken & Williams: Transfer cold samples from ISS MELFI to shuttle Glacier per MLF GLCR 20A SMP XFR activity (Item 721)
- XFER OPS:
    - Continue return transfers

FD09 (no xfer brief)

- Virts: Return old C&W panel per C&W PANEL COVER DEPLOY activity (Item 705)

FD10

- XFER OPS:
    - Transfer returning RFTA to shuttle after Soichi's WRS-RFTA-R&R activity (Item 732)
    - After EVA3 A/L egress, transfer CSA-O2s (Items 707 and 708)
    - Swap MPCs (Items 40 and 720)

FD11

- Williams: Transfer returning blood sample per BLD STW activity (Item 704)
- Creamer: Transfer returning saliva sample per SLV STW activity (Item 728)
- Robinson: Transfer AFD PCS per AFT PCS XFER activity (Item 39)
- Robinson: Transfer SSC back to ISS during SSC RETURN activity (Item 804)

- Behnken: Transfer SAFER to shuttle per SAFER XFER activity (Item 714)
- Patrick & Behnken: Transfer EVA items to shuttle per EVA RECONFIG & XFER activity (Items 702, 712, 713, and 715)
- Noguchi: Transfer returning RAMs to shuttle per RAM INSTALL activity (Item 726)
- Noguchi: Transfer DCBs to shuttle per DCB XFR activity (Item 709 and 710)
- XFER OPS:
    - Complete water hardware transfers (Items 24, 25, and 729)
    - Transfer Return to Houston Imagery ziplock (Item 727)
    - Transfer remaining 5 MLE bags (Items 408, 701, and 703)

<u>5 MLE Bag Plan (9 total)</u>

- Bags B & H: to Columbus for temp stow (FD03-11)
- Bag F: to Columbus permanently (return prepacked 5 MLE in its place FD11)
- Bags C, D & E: remain on shuttle for unpacking/repacking
- Bag A: contains UPA DA, temp stow in JEM for FD04
- Bags G & I: handled via EVA procedures (G will be temp stowed in Node 1)

STS-130 / 20A Return Transfer List

CHNG	☑	FD	Initials	Item #	Item Name	Qty	Initial Stowage	Temp Stowage	Stowage at Undock	Wt (lbs)	ACTIVITY / **Constraints** / **Comments
				600	20A Return Item 600 [WRS Recycle Filter Tank Assembly s/n 005]	1	NOD2D2	COL1D3 (in Bag B)		148.00	**Foam cap transfers with item.
X				~~601~~	~~20A Return Bag 601~~ ~~[Swab Experiment Kit]~~ Item Deleted	~~1.0 CTB~~	~~NOD2D2~~		~~MF57C~~	~~21.25~~	
				602	20A Return Bag 602 [Thirsk for return]	0.5 CTB	NOD2D2		MD CEIL PORT 1 (in Bag E)	11.00	
				603	20A Return Bag 603 [Stott for return]	0.5 CTB	NOD2D2		MD CEIL PORT 1 (in Bag E)	11.00	
				604	20A Return Bag 604 [DeWinne for return]	0.5 CTB	NOD2D2	NOD1 (in Bag G)		11.00	
				605	20A Return Bag 605	1.0 CTB	NOD2D2		MF14E	4.00	
				608	20A Return Item 608 [CDRA Dessicant/Sorbent Bed (old)]	1	NOD2D2	COL1D2 (in Bag H)		102.00	**Contain old CDRA bed in new CDRA bed foam and then wrap in 2 jettison stowage bags. JSBs are pregathered near the CDRA bed.**
X				609	20A Return Bag 609	1.0 CTB	NOD2D2		MF57C	4.00	
X				610	20A Return Item 610 [Pump/Separator ORU]	1 foam box	NOD2D2		MD FLOOR PORT 2 (in Bag A)	60.80	**Tape the foam cushion clamshell seam, then place the assembly in a Hefty bag. Label Hefty bag "FWD FOR LAUNCH" to match label on foam. Secure, tie open end of bag and grey tape.**
				611	20A Return Item 611 [Recycle to FCPA]	1	NOD2D2		Shuttle A/L (in Bag D)	3.00	**Item is bagged and taped.

[ ] - notes included by transfer team, - not on actual label

CHNG	☑	FD	Initials	Item #	Item Name	Qty	Initial Stowage	Temp Stowage	Stowage at Undock	Wt (lbs)	ACTIVITY / **Constraints** / **Comments
X				723	Pre-Treat Tank (E-K) [s/n 802025]	0.5 CTB	JLP1P2_C1		MD CEIL STBD 1 (in Bag I)	5.84	**Don PPE - Tox 2 fluid. Verify PY-4, PY-5 connectors closed (position "3"). Verify PY-4 capped. Wrap Pretreat Tank and hose in bubble wrap to prevent damage to Hefty Bag during return. Bag Pretreat Tank and attached hose in Hefty Bag. Secure, tie open end of bag and grey tape. Place assembly into a 0.5 CTB (use empty CTB from NOD1D2).**
				725	PWR	1.0 CTB	MF14K		MD FLOOR STBD 1 (in Bag C)	5.50	**Only CTB and foam return in shuttle; the PWR that launched inside transferred to ISS. Reference resupply item #17.
				726	Radiation Area Monitors	1 ziplock	ISS installed		MF57O (in CTB)	0.55	**Transfer on FD11 after RAM INSTALL activity.**
				727	Return to Houston Imagery	1 ziplock	NOD2P4 (in 0.5 CTB s/n 1360)		MF14K (in item 403)	1.61	**Transfer on FD11.** **Tapes will continue to be added until after EVA3.
				728	Saliva Sample Return Pouch	1	in use		MF57O (in CTB)	0.26	**Transfer on FD11 per SALIVA STOW activity.**
				729	Silver Biocide Syringe Kit [s/n 1001]	1	NOD2O2 (in M-02 Bag s/n 1026)		MF57K	1.34	**Transfer on FD11 after final CWC fill.** **Swaps with return item 25.** **Use per water ops cue card, then transfer to shuttle.

MSG 050 - FD05 CREW CHOICE DOWNLINK

TDRS	AOS	LOS	Delta (min)	Notes
W-171	4/00:41	4/01:11	30	
E-275	4/01:55	4/02:09	14	Gimbal flip at 4/02:09; Analog only
W-171	4/02:15	4/02:47	32	
W-171	4/03:51	4/04:22	31	

Note: Please notify MCC-H 10 minutes prior to the event to allow for ground network configuration.

END OF PAGE 1 OF 1, MSG 050

Contents:

Timeline Procedures:
WRS-RFTA-ACCESS
WRS-RFTA-CLOSEOUT
WRS-MV1-OPEN
WRS-RFTA-FILL
WRS-RFTA QD-CNFG
**NODE 3 VEST ACCESS
NS-20A-MELFI INS
EHS-CSA-CP-MNT
WRS-UPA-FILL
**NODE 3 LK CK S/U
N3 VEST LK CK PT1
N3 VEST LK CK PT2

ESA Timeline Procedures:
None

JAXA Timeline Procedures:
FOREST-CULTIVATE

Tasklist Procedures:
BCAT3-CRYSTAL-CHECK
WHC-KTO-REPLACE
WHC-ЕДВ-У-R&R
PWD-BEV ADPTR-R&R

JAXA Tasklist Procedures:
None

ESA Tasklist Procedures:
None

Timeline Procedures:

WRS-RFTA-ACCESS WRS-RFTA-CLOSEOUT						
21-0140 1.291 WRS ACCESS						
Type: Standard						
#	**LOCATION**	**ITEM NAME**	**P/N**	**S/N**	**B/C**	**Notes**
1	**NOD1D4**	Tape Measure	SKG33117562-920	-	-	

WRS-MV1-OPEN WRS-RFTA-FILL WRS-RFTA QD-CNFG						
2.907 UPA RFTA CHANGEOUT - BACKFILL METHOD						
Type: Standard						
#	**LOCATION**	**ITEM NAME**	**P/N**	**S/N**	**B/C**	**Notes**
1	**LAB1P2** 0.5 CTB, S/N 1221, B/C 010402J	Regen ECLSS Tox-2 PPE Kit	SEG42103702-302	1002	CHCCPK02J	
2		Safety Goggles	503R	-	-	
3		Surgical Masks	8210	-	-	
4		Silver Shield Gloves	SS104M	-	-	
5	**LAB1S1** TeSS Stowage Area	Крышка ЕДВ (EDV Cover)	11Ф615.8711-180A15-1	916	00047825R	
6		Корпус ЕДВ (EDV Bucket)	11Ф615.8711-120A15-1	2 п.34	00043103R	
7		Крышка ЕДВ (EDV Cover)	11Ф615.8711-180A15-1	917	00047826R	
8		Корпус ЕДВ (EDV Bucket)	11Ф615.8711-120A15-1	429	00098520R	
Type: Restow						
9	**LAB1S1** TeSS Stowage Area	Крышка ЕДВ (EDV Cover)	11Ф615.8711-180A15-1	908	00047144R	
10		Корпус ЕДВ (EDV Bucket)	11Ф615.8711-120A15-1	440	00047816R	
11	**Temp Stow near WRS Rack**	Крышка ЕДВ (EDV Cover)	11Ф615.8711-180A15-1	917	00047826R	Prepositioned for Install
12		Корпус ЕДВ (EDV Bucket)	11Ф615.8711-120A15-1	429	00098520R	

NODE 3 VEST ACCESS						
1.104 VESTIBULE OUTFITTING NOD1 TO NOD3						
Type: Standard						
#	**LOCATION**	**ITEM NAME**	**P/N**	**S/N**	**B/C**	**Notes**
1	**Pregathered ToolSet "Jeff" or "TV"**	Ratchet, 1/4" Drive;	-	-	-	
2		5/32" Hex Head, 1/4" Drive	-	-	-	
Type: Restow						
3	**Temp Stow For FD07**	NOD1 Closeout panels	-	-	-	

NS-20A-MELFI INS						
2.014 MELFI Insertion of Sample Into Box Module-IMS Generic						
Type: Standard						
#	**LOCATION**	**ITEM NAME**	**P/N**	**S/N**	**B/C**	**Notes**
1	**JPM1D4_B1**	Dewar ASE Pouch	03298	03J	MEFDAP03J	
2		White Gloves	03291-1	Any	Any	
3	**JPM1D4** (at MELFI-1)	Coldplate/Wireway Cover	03000	-	-	
4	**JPM1D5 Rack front** 1.0 CTB, EMCS/NANO-SKELETON, S/N 1133, B/C 004127J	ESD Bubble Wrap Bag [QTY: 3]	-	-	-	
5		BAG CARTRIDGE A [QTY:3] (Nanoskeleton)	CNSKL11000	001 002 003	CBES1201N CBES1202N CBES1203N	
Type: Restow						
6	**JPM1D4 MELFI-1** Dewar 1, Tray B, Section 1-2	BAG CARTRIDGE A [QTY:2] (Nanoskeleton)	CNSKL11000	001 002	CBES1201N CBES1202N	

7	**JPM1D4** MELFI-1 Dewar 1, Tray C, Section 2-3	BAG CARTRIDGE A [QTY:1] (Nanoskeleton)	CNSKL11000	003	CBES1203N	
8	**JPM1O3_C2** 1.0 CTB, JAXA #4 S/N 1048, B/C 002933J	ESD Bubble Wrap Bag [QTY: 3]	-	-	-	Removed from BAG CARTRIDGE A

EHS-CSA-CP-MNT						
20-0854 2.6.000 CSA-CP - Routine Maintenance						
Type: Standard						
#	**LOCATION**	**ITEM NAME**	**P/N**	**S/N**	**B/C**	**Notes**
1	**LAB1O5_B2**	CSA-CP Resupply Kit	SJG46120020-301	1037	00104569J	
2		CSA-CP/CDM Battery Pack	SED46115802-304	**Any**	-	**Report S/N to MCC-H.** For Prime CSA-CP S/N 1042
3		Zero Filter	KLSD210047-301	1014	-	
4	**NOD1S4-03 Deployed**	CSA-CP [QTY: 2]	SED46115801-304	1052 1056	00124908J 00124909J	
5		CSA-CP Sampling Pump	SED46115803-303	1024	BCC00086J	
6	**SM 208 Deployed**	CSA-CP	SED46115801-304	1042	00124906J	Prime CSA-CP
7		CSA-CP	SED46115801-304	1049	00124907J	
Type: Restow						
8	**LAB1O5_B2**	CSA-CP Resupply Kit	SJG46120020-301	1037	00104569J	
9		CSA-CP/CDM Battery Pack	SED46115802-304	1105	-	This battery will be removed from the Prime CSA-CP (S/N 1042).

WRS-UPA-FILL						
21-0223 1.904 UPA ACTIVATION						
Type: Standard						
#	**LOCATION**	**ITEM NAME**	**P/N**	**S/N**	**B/C**	**Notes**
1	**LAB1P2** 0.5 CTB, S/N 1221, B/C 010402J	Regen ECLSS Tox-2 PPE Kit	SEG42103702-302	1002	CHCCPK02J	
2		Safety Goggles	503R	-	-	
3		Mess-Up Mitts	RMUM-12	-	-	
4		Silver Shield Gloves	SS104M	-	-	
5		Surgical Masks	8210	-	-	

1

NODE 3 LK CK S/U N3 VEST LK CK PT1 N3 VEST LK CK PT2						
1.117 NODE 1/NODE 3 VESTIBULE PRESSURIZATION AND LEAK CHECK						
Type: Standard						
#	**LOCATION**	**ITEM NAME**	**P/N**	**S/N**	**B/C**	**Notes**
1	**Temp Stowed NOD2 FWD Hatch from FD3**	MPEV Internal Sampling Adapter ISA	97M55830-1	2	000002M	
2		Scopemeter Pressure Probe	SEG39130244-302	-	004461J	Installed on ISA
3		VAJ-78-1 5ft	683-17111-1	-	00002677J	
4		Multimeter Kit	10118-10018-04	1017	-	
5		Multimeter	87	1010	00088636J	Happy
Type: Restow						
6	**Remain attached to NOD1 Port Hatch MPEV**	MPEV Internal Sampling Adapter ISA	97M55830-1	2	000002M	
7		Scopemeter Pressure Probe	SEG39130244-302	-	004461J	Installed on ISA
8		VAJ-78-1 5ft	683-17111-1	-	00002677J	
9		Multimeter Kit	10118-10018-04	1017	-	
10		Multimeter	87	1010	00088636J	Happy

2

ESA Timeline Procedures:
None

JAXA Timeline Procedures:

FOREST-CULTIVATE						
2.014 DEWEY'S FOREST PLANT CULTIVATION						
Type: Standard						
#	**LOCATION**	**ITEM NAME**	**P/N**	**S/N**	**B/C**	**Notes**
1	**JPM1O2_C2** 1.0 CTB: CTB-U-S3, S/N 1490, B/C CTB00314N	Ziplock bag "Dewey's Forest Supplies"	-	-	-	
2		Water Tap	EPODF13310	-	JEP03141N	
3		Syringe Kit	EPODF13200	001	JEP03131N	
4		Ziplock bag	-	-	-	
5		Water Bag Small	EPODF13320	005	JEP03165N	
Type: Restow						
6	**JPM1A7 Ryutai Storage** Jettison Stowage Bag S/N 0004, B/C JSB00004N	Ziplock bag "For future trash"	-	-	-	
7		Water Bag Small	EPODF13320	005	JEP03165N	
8		Water Tap [QTY: 1]	EPODF13310	-	-	

Tasklist Procedures:

BCAT3-CRYSTAL-CHECK						
2.034 BCAT-4 CRYSTAL CHECK FOR SAMPLES 8,9, and 10						
Type: Standard						
#	**LOCATION**	**ITEM NAME**	**P/N**	**S/N**	**B/C**	**Notes**
1	**LAB1O7 Rack Front**	BCAT-3 Slow Growth Sample Module	67041FSM2200	-	00030426L	
2	**LAB1O4_J1** 0.5 CTB BCAT S/N 1240, B/C 010421J	LED Mini Maglight	60107MFA2017	-	00105256L	
3		1.5V Battery Size AA	528-41350-3	-	-	(if required)

1

WHC-KTO-REPLACE						
2.305 WHC [KTO] R&R						
Type: Standard						
#	**LOCATION**	**ITEM NAME**	**P/N**	**S/N**	**B/C**	**Notes**
1	**FGB Panel 220** or **FGB Floor** or **NOD1O2**	Solid Waste Container – Body (aka KTO Body)	11Φ615.8720A55-20	257 263 264 265 272 275 278 282 304 307 308 309 310 325	- 00112722J 00112724J 00112735J 00116316J 00116313J 00116302J 00116311J 00112744J 00112738J - 00112746J 00112748J 00112736J	This is the list of available KTO Bodies. **REPORT S/N and B/C**
2		Solid Waste Container – Lid (aka KTO Bottom)	11Φ615.8720A55-10	257 258 263 265 272 274 275 278 282 307 308 309 310 325	00098427R 00098428R 00112721J 00112733J 00098472R 00098474R 00098475R 00098438R 00098442R 00112737J - 00112745J 00112747J -	This is the list of available KTO Lids. **REPORT S/N and B/C**
3	**LAB1D1**	Solid Waste Container – Body (aka KTO Body)	11Φ615.8720A55-20	305	00112730J	Prepositioned for Install

4		Solid Waste Container – Lid (aka KTO Bottom)	11Ф615.8720A55-10	276	00098436R	
5	**NOD1D4**	Ratchet, 1/4" Drive	SKG33117562-939	-	-	
6		10 mm 6 Pt Socket, 1/4" Drive	SKG33117562-657	-	-	
7		(10-50 in-lbs) Trq Wrench, 1/4" Drive	SEG33112395-301	M206422	-	
Type: Restow						
8	**LAB1S1** TeSS	Solid Waste Container – Body (aka KTO Body)	11Ф615.8720A55-20	-	-	**REPORT S/N and B/C**
9		Solid Waste Container – Lid (aka KTO Bottom)	11Ф615.8720A55-10	-	-	

1

WHC-ЕДВ-У-R&R						
2.302 WHC ЕДВ R&R						
Type: Standard						
#	**LOCATION**	**ITEM NAME**	**P/N**	**S/N**	**B/C**	**Notes**
1	**LAB1P2** 0.5 CTB S/N 1221, B/C 010402J	Regen ECLSS Tox-2 PPE KIT	SEG42103702-302	1002	CHCCPK02J	
2		Safety Goggles	16644-00000	-	-	
3		Silver Shield Gloves	SSG/10	-	-	
4		Dust Mask	9211	-	-	
5	**LAB1D1**	ЕДВ Крышка (EDV Lid)	11Ф615.8711-180A15-1	935	00125549J	Prepositioned
6		ЕДВ Корпус (EDV Bucket)	11Ф615.8711-120A15-1	459	00125565J	
7	**NOD1O2**	ЕДВ Крышка (EDV Lid)	11Ф615.8711-180A15-1	902	00098592R	
8		ЕДВ Крышка (EDV Lid)	11Ф615.8711-180A15-1	904	00098594R	
9		ЕДВ Крышка (EDV Lid)	11Ф615.8711-180A15-1	922	00047831R	
10	**FGB**	ЕДВ Крышка (EDV Lid)	11Ф615.8711-180A15-1	-	-	**REPORT S/N and B/C**
11		ЕДВ Корпус (EDV Bucket)	11Ф615.8711-120A15-1	-	-	
Type: Restow						
12	**LAB1S1**	ЕДВ Крышка (EDV Lid)	11Ф615.8711-180A15-1	931	00116326J	
13		ЕДВ Корпус (EDV Bucket)	11Ф615.8711-120A15-1	455	00116319J	

2

PWD-BEV ADPTR-R&R						
22-0309 PWD Beverage Adapter Modification and Install						
Type: Standard						
#	**LOCATION**	**ITEM NAME**	**P/N**	**S/N**	**B/C**	**Notes**
1	**LAB1O4_D1**	PWD Beverage Adapter	SEG33120333-302	1002	-	
2	**NOD1D4**	Ratchet, 1/4” Drive	SKG33117562-939	-	-	
3		5/32” Hex Head, 1/4” Drive	SKG33117562-742	-	-	
Type: Restow						
4	**LAB1O4_D1**	PWD Beverage Adapter	SEG33120333-301	-	-	

JAXA Tasklist Procedures:
None

ESA Tasklist Procedures:
None

Per pre-flight agreement, use the following tools from the IFM Tool Locker (MA16D) as needed on ISS for assembly procedures. For convenience, keep tools together and place in Ziplock Bag (MF71K). Label the bag "Shuttle Tools" with a Sharpie. Return all Shuttle IFM tools used on ISS to Endeavour prior to sleep.

4-Inch Ratchet Wrench (1/4” Drive)
4" Ext, 1/4" Drive
6" Ext, 1/4" Drive
Driver Handle, 1/4" Drive
1/4" to 3/8" Adapter
3/16" Hex Head, 3/8" Drive
5/32" Hex Head, 1/4" Drive
7/16" Deep Socket, 1/4" Drive
3/8" Socket, 1/4" Drive
9/16" Socket, 3/8" Drive
Flat Tip Screwdriver, Long
Vise Grips
4-1/2 Inch Diagonal Cutters
Anti-Static Wrist Tether

END OF PAGE 1 OF 1, MSG 052

OBJECTIVE:

Power up CBCS for PMA relocate to Node 2 Zenith on day of operations. Power down, then transfer Centerline Berthing Camera System (CBCS) and all related avionics from Node 2 to Node 1, for the Node 3 Installation to Node 1 Port on 20A.

LOCATION:

Node 2
Node 1

DURATION:

Power up for Day of PMA3 Relocate - 10 minutes (step 1)
Transfer/Install from Node 2 to Node 1 - 45 minutes (steps 3 to 10)
Powerdown/Temp Stow - 15 minutes (steps 10 to 11)

CREW:

One

PARTS:

NOTE
CBCS String One and Two installations will be alternated to ensure functionality of each string. Strings One and Two contain identical hardware distinguished by Serial Number (S/N).

Table 1. Parts List.

Part	P/N	S/Ns	Notes
Camera Bag	SEG33112759-301	1001 (1002)	Blue bag that holds the camera
CBCS Camera Assembly	SEG33112576-301	1001 (1002)	Stored in Camera Bag
Ku-Band Power Supply	SEG46116711-302	1004 (1008)	Marked "For CBCS Use Only"
LED Control Unit	SEG33112643-301	1001 (1002)	
Video Interface Unit	SEG33112646-301	1003 (1002)	
CBCS Camera Cable	SEG33112641-301	1002 (1001)	13 ft cable; Violet, gold, orange connectors
CBCS Electronics Cable	SEG33112638-301	1002 (1001)	20 ft cable; Pink, red, yellow, blue connectors
UOP Power PSA Cable, 120VDC	SEG46116745-301	1008 (1007)	21 ft cable

MATERIALS:

Velcro Straps (as required for securing cabling)

TOOLS:

Digital camera

REFERENCED PROCEDURE:

6.114 LAB (CUP) RWS UOP BYPASS CABLE RECONFIGURATION

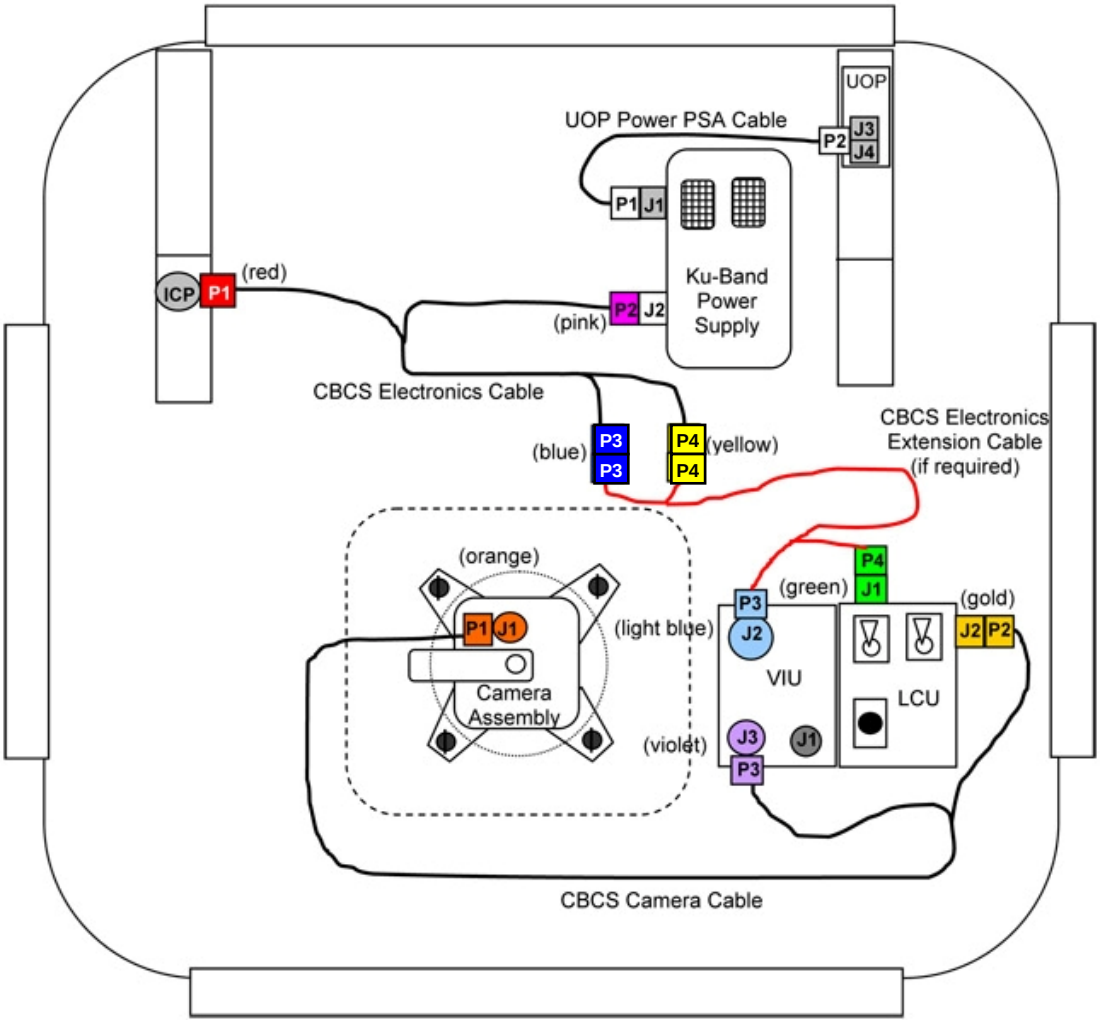

Figure 1. - Example CBCS Installation Diagram.

NOTE
Figure 1 shows an example CBCS installation. For PMA3 relocate, the N2 Internal Camera Port (ICP) will be used, along with Node 2 UOP 1. For N3 install, the N1 Internal Camera Port (ICP) will be used along with Node 1 UOP 1.

1. APPLYING POWER TO CBCS FOR PMA 3 RELOCATE TO N2 ZEN

1.1 √All CBCS cables mated per Figure 1.

NOD2P6 1.2 Enabling Node 2 UOP 1

√POWER OUT – √ (green ENABLE)

√Fault/Test – OK illuminated (green)

1.3 Ku-Band Power Supply OUTPUT 28V → ON

1.4 √Ku-Band Power Supply Input/Output LEDs (two) – illuminated (green)

2. CHECKING OUT CBCS VIDEO ON RWS MONITOR

2.1 √**MCC-H** - Ground complete with video routing to RWS

2.2 Routing CBCS video from ICP

DCP Configure RWS monitor as specified below:

Monitor 2
72: CBCS

2.3 Verify CBCS video displayed on RWS.

2.4 Verify **MCC-H** complete with ground video check.

3. POWERING DOWN

3.1 Ku-Band Power Supply OUTPUT 28 → OFF
√Ku-Band Power Supply Output LED – dark

NOD2P6 3.2 Removing power from Node 2 UOP 1
√POWER OUT – √ (blue RESET)
√Fault/Test – dark

3.3 Leave all CBCS cables, hardware connected for future CBCS operations.

4. TRANSFER CBCS TO NODE 1

NOD2P6 4.1 UOP Power PSA Cable, 120VDC P2 ←|→ J3 on Node 2 UOP 1
CBCS Electronics cable P1 (red) ←|→ Node 2 Internal Camera Port (ICP)

Retrieve Node 2 Video Cap J01 from stowage.

Replace Video Cap J01 VCP to Video Port located at NOD2S4.

4.2 Remove CBCS Camera Assembly from Hatch Standoff Fittings on Node 2 Zenith Hatch (1/4 Turn Fasteners).
Leave Gray Tape (four pieces) on LEDs.
Leave Hatch Standoff Fittings installed on Node 2 Zenith hatch.
Place CBCS Camera Assembly in Camera Bag face down to protect during transfer to Node 1.

4.3 If N2 Zenith Inner Hatch Window Shield was removed when CBCS was installed on N2 Zenith Hatch, reinstall (Velcro).

4.4 If Handrail Clamp and/or Multi-use Bracket was used to secure LED Control Unit and/or Video Interface Unit, remove and temporarily stow.

4.5 Gather and relocate all CBCS hardware to Node 1.
- Ku-Band Power Supply
- CBCS Camera Assembly (stowed in blue Camera Bag)
- Video Interface Unit (VIU)
- LED Control Unit (LCU)
- All cabling

5. SAFING

NOD1SD4 Verifying no power applied to Node 1 UOP 1 J3.
√POWER OUT – √ (blue RESET)
√Fault/Test – dark

6. INSTALLING CBCS HARDWARE

6.1 UOP Power PSA Cable, 120VDC P2 →|← J3 on Node 1 UOP 1

NOD1SD3 6.2 CBCS Electronics cable P1 (red) →|← Node 1 Internal Camera Port (ICP)

NOTE
1. Handrail Clamp and/or Multi-use Bracket may be used to secure LED Control Unit, Video Interface Unit if desired.
2. CBCS Extension Cable is not required.

6.3 Secure LED Control Unit, Video Interface Unit near N1 Port hatch.

7. CONFIGURING LED CONTROL UNIT SETTINGS

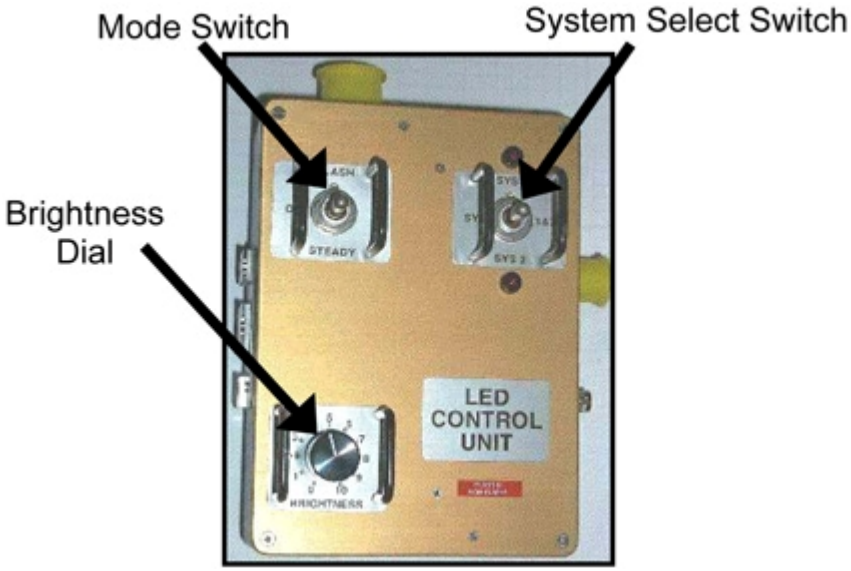

Figure 2. - LED Control Unit.

Brightness Dial → 10 (was previously set at 5 for PMA 3 Relocate)
sw Mode Switch → STEADY
sw System Select Switch → SYS 1&2
Refer to Figure 2.

8. INSTALLING CAMERA ASSEMBLY

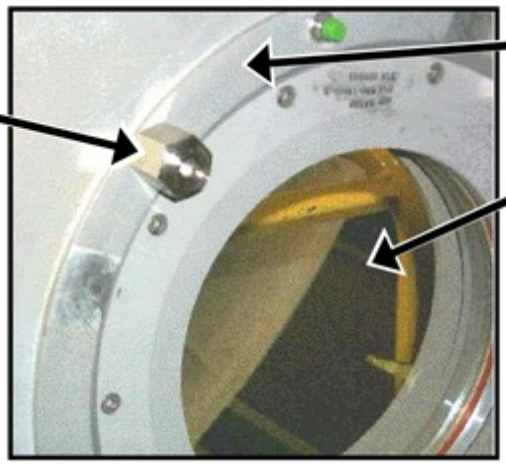

Figure 3. - Hatch Standoff Fitting Installed.

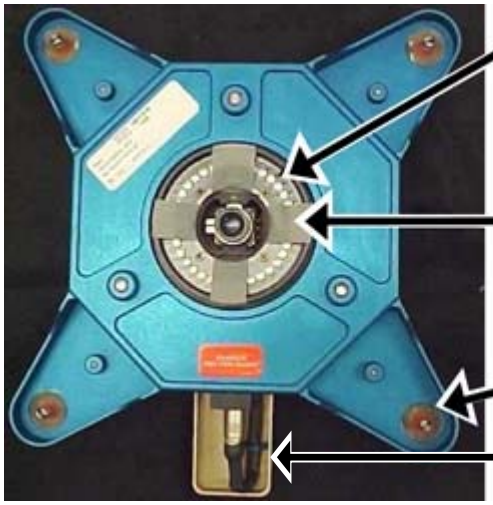

Figure 4. - LEDs Covered with Gray Tape.

CAUTION
Ensure that all 1/4 Turn Fasteners are fully seated in Hatch Standoff Fittings before engaging. Improper alignment could cause captive rubber grommet to disengage from CBCS Camera Assembly and affect centerline alignment.

8.1 If N1 Port Inner Hatch Window Shield is installed on hatch window, remove (Velcro).
Temporarily stow.

8.2 Mount CBCS Camera Assembly to Hatch Standoff Fittings with Camera tail oriented tail pointing ISS Aft, 1/4 Turn Fasteners (four). Refer to Figures 3 and 4.

8.3 Photo document CBCS Camera orientation, showing complete hatch in camera view (Digital Camera).

9. APPLYING POWER TO CBCS

9.1 √All CBCS cables mated per Figure 1.

NOD1SD4 9.2 Enabling Node 1 UOP 1

√POWER OUT – ⊻ (green ENABLE)

√Fault/Test – OK illuminated (green)

9.3 Ku-Band Power Supply OUTPUT 28V → ON

9.4 √Ku-Band Power Supply Input/Output LEDs (two) – illuminated (green)

10. CHECKING OUT CBCS VIDEO ON RWS MONITOR

10.1 If required, perform Display Control Panel (DCP) Cable Mate 6.114 LAB(CUP) RWS UOP BYPASS CABLE RECONFIGURATION, step 2 (SODF: RBT GEN: NOMINAL: RWS HARDWARE OPERATIONS), then:

10.2 √**MCC-H** - Ground complete with video routing to RWS

10.3 Routing CBCS video from ICP

DCP Configure RWS monitor as specified below:

Monitor 2
17: CBCS

10.4 Verify CBCS video displayed on RWS.

10.5 Verify **MCC-H** complete with ground video check.

11. POWERING DOWN

11.1 Ku-Band Power Supply OUTPUT 28 → OFF

√Ku-Band Power Supply Output LED – dark

NOD1SD4 11.2 Removing power from Node 1 UOP 1

√POWER OUT – ⊻ (blue RESET)

√Fault/Test – dark

12. TEMPORARILY STOWING CBCS

12.1 Leave all CBCS cables, hardware connected for future CBCS operations.

12.2 Remove CBCS Camera Assembly from Hatch Standoff Fittings (1/4 Turn Fasteners).
Leave Gray Tape (four pieces) on LEDs.
Leave Hatch Standoff Fittings installed on Node 1 Port hatch.
Place CBCS Camera Assembly in Camera Bag face down, then temp stow in safe location in Node 1.

12.3 If N1 Port Inner Hatch Window Shield was installed on hatch window, reinstall (Velcro).