National Aeronautics and Space Administration

SPACE SHUTTLE MISSION

STS-129

Stocking the Station

www.nasa.gov

PRESS KIT/November 2009

CONTENTS

Section	Page
STS-129/ULF-3 MISSION OVERVIEW	1
STS-129 TIMELINE OVERVIEW	9
MISSION PROFILE	11
MISSION OBJECTIVES	13
MISSION PERSONNEL	15
STS-129 CREW	17
PAYLOAD OVERVIEW	27
S-BAND ANTENNA SUPPORT ASSEMBLY (SASA) AND RADIO FREQUENCY GROUP (RFG)	29
EXPRESS LOGISTICS CARRIER 1 AND 2	31
RENDEZVOUS & DOCKING	47
UNDOCKING, SEPARATION, AND DEPARTURE	48
SPACEWALKS	51
EXPERIMENTS	59
DETAILED TEST OBJECTIVES AND DETAILED SUPPLEMENTARY OBJECTIVES	59
EXPERIMENTS	62
SHUTTLE REFERENCE DATA	71
LAUNCH AND LANDING	89
LAUNCH	89
ABORT-TO-ORBIT (ATO)	89
TRANSATLANTIC ABORT LANDING (TAL)	89
RETURN-TO-LAUNCH-SITE (RTLS)	89
ABORT ONCE AROUND (AOA)	89
LANDING	89

Section Page

ACRONYMS AND ABBREVIATIONS 91

MEDIA ASSISTANCE 105

PUBLIC AFFAIRS CONTACTS 107

STS-129/ULF-3 MISSION OVERVIEW

Backdropped by Earth's horizon and the blackness of space, the International Space Station is seen from space shuttle Discovery as the two spacecraft begin their relative separation.

There are no home improvement stores in space, so the next space shuttle mission to the International Space Station will deliver 14 tons of important spare parts for its electrical, plumbing, air conditioning, communications and robotics systems.

Atlantis, commanded by space veteran Charles O. Hobaugh, is scheduled to lift off from Kennedy Space Center at 2:28 p.m. EST, Nov. 16, on the third utilization and logistics flight, and arrive at the station the afternoon of Nov. 18.

For the STS-129 Utilization and Logistics Flight - 3 (ULF-3) mission, Atlantis will carry in its cargo bay two ExPRESS Logistics Carriers (ELC's), a new Materials on International Space Station Experiment (MISSE) carrier and an S-Band Antenna Sub-Assembly (SASA) package, plus additional equipment, supplies and scientific experiments that will be used by the continuing crew of six aboard the station.

While docked to the station, Atlantis' crew will conduct three spacewalks to transfer the spare parts from the shuttle's payload bay to the station's external structures and continue assembly activities.

Astronaut Charlie Hobaugh, STS-129 commander, attired in a training version of his shuttle launch and entry suit, occupies the commander's station on the flight deck during in a Full Fuselage Trainer (FFT) mock-up training session in the Space Vehicle Mock-up Facility at NASA's Johnson Space Center.

At the end of the 11-day flight, Atlantis also will bring home Expedition 20 and 21 Flight Engineer Nicole Stott, the final astronaut scheduled to use a space shuttle for a lift to or from the station.

Hobaugh, who turns 48 the week before launch, served as pilot on STS-104 in 2001 and STS-118 in 2007. He'll be joined at launch by pilot Barry E. Wilmore, a U.S. Navy captain, and mission specialists Randy Bresnik, a U.S. Marine Corps lieutenant colonel; and Robert L. Satcher Jr., an orthopedic surgeon, all of whom will be making their first spaceflights.

Rounding out the crew are mission specialists Leland Melvin, 45, an 11th round draft pick for the NFL's Detroit Lions who flew on STS-122 in 2008, and Mike Foreman, a retired Navy captain who flew on STS-123 in March 2008. Stott, a former Kennedy Space Center shuttle processing director completing a 100-day mission aboard the station, will join the STS-129 crew for the ride home to Earth.

Aside from returning Stott and delivering supplies for station crew, the main objective of the STS-129 mission is to deliver, install and checkout two large logistics pallets and their

spare parts, and to prepare the station for the arrival of the Tranquility module, the final U.S.-built component of the station, which will be delivered on the following flight in February. This will be the first flight of an ExPRESS (Expedite the Processing of Experiments to Space Station) Logistics Carrier.

ExPRESS Logistics Carrier-1 will launch with an Ammonia Tank Assembly (ATA), a Battery Charge Discharge Unit (BCDU), a Space Station Remote Manipulator System (SSRMS) Latching End Effector (LEE), a Control Moment Gyro (CMG), a Nitrogen Tank Assembly (NTA), a Pump Module (PM), a Plasma Contactor Unit (PCU) and two empty Passive Flight Releasable Attachment Mechanisms (PFRAMs).

ExPRESS Logistics Carrier-2 will launch with a High Pressure Gas Tank (HPGT), a Cargo Transport Container 1 (CTC-1) mounted to a Small Adapter Plate Assembly (SAPA), a Mobile Transporter/Trailing Umbilical System (MT/TUS), CMG, NTA, PM, Utility Transfer Assembly (UTA) Flight Support Equipment (FSE), one empty Payload PFRAM and MISSE-7, an experiment that will expose a variety of materials being considered for future spacecraft to the extreme conditions outside the station.

Astronaut Leland Melvin, STS-129 mission specialist, participates in a training session in an International Space Station mock-up/trainer in the Space Vehicle Mock-up Facility at NASA's Johnson Space Center.

Several experiments that are considered pathfinders for U.S. National Laboratory investigations aboard the space station, also will be flown. One of those is part of a continuing investigation that is seeking a vaccine that can be used against food poisoning.

The day after launch, Hobaugh, Wilmore, Melvin and Bresnik will take turns from Atlantis' aft flight deck maneuvering its robotic arm in the traditional day-long scan of the reinforced carbon-carbon on the leading edges of the shuttle's wings and its nose cap. This initial inspection, using a 50-foot-long crane extension equipped with sensors and lasers, called the Orbiter Boom Sensor System, will provide imagery experts on the ground a close-up look at the areas that experience the highest heating upon re-entry to the Earth's atmosphere. A follow-up inspection will take place after Atlantis undocks from the station.

While the inspection takes place, Bresnik, Foreman and Satcher will prepare the spacesuits they will wear for the three spacewalks to be conducted out of the Quest airlock at the station. As Foreman and Satcher prepare the spacesuits for transfer to the station, Bresnik will join the heat shield inspection team. Other pre-docking preparations will occupy the remainder of the crew's workday.

Astronaut Mike Foreman, STS-129 mission specialist, dons a training version of his Extravehicular Mobility Unit (EMU) spacesuit in preparation for a spacewalk training session in the waters of the Neutral Buoyancy Laboratory (NBL) near NASA's Johnson Space Center. Astronaut Charlie Hobaugh, commander, assists Foreman.

On the third day of the flight, Atlantis will be flown by Hobaugh and Wilmore on its approach for docking to the station. After a series of jet firings to fine-tune Atlantis' path to the complex, the shuttle will arrive at a point about 600 feet directly below the station about an hour before docking. At that time, Hobaugh will execute the rendezvous pitch maneuver, a one-degree-per-second rotational "backflip" to enable station crew members to snap hundreds of detailed photos of the shuttle's heat shield and other areas of potential interest – another data point for imagery analysts to pore over in determining the health of the shuttle's thermal protection system.

Once the rotation is completed, Hobaugh will fly Atlantis in front of the station before slowly closing in for a linkup to the forward docking port on the Harmony module at 11:56 a.m. EST Nov. 18. Less than two hours later, hatches will open between the two spacecraft and a combined crew of 12 will begin almost seven days of work between the two crews. Atlantis' crew will be working with Expedition 21 commander Frank De Winne of the European Space Agency, and NASA flight engineers Jeff Williams and Stott, Canadian flight engineer Bob Thirsk, and Russian flight engineers Roman Romanenko and Max Suraev.

After a station safety briefing, Melvin and Bresnik will grapple ELC-1 using the shuttle's robotic arm and hand it off to the station's arm, operated by Williams and Wilmore, who will then install it on an Unpressurized Cargo Carriers Attachment System (UCCAS) on the port side of the station's backbone.

Astronaut Robert Satcher, STS-129 mission specialist, participates in an Extravehicular Mobility Unit (EMU) spacesuit fit check in the Space Station Airlock Test Article (SSATA) in the Crew Systems Laboratory at NASA's Johnson Space Center. Astronaut Barry Wilmore, pilot, assists Satcher.

Spacewalkers Foreman and Satcher will sleep in the Quest airlock as part of the overnight "campout" procedure that helps purge nitrogen from their bloodstreams, preventing decompression sickness once they move out into the vacuum of space. The campout will be repeated the night before all three spacewalks.

The fourth day of the mission will focus on the first spacewalk, with Foreman and Satcher transferring the spare SASA antenna from Atlantis' cargo bay to the station's truss and attaching power for its heaters, lubricating the snares on the Kibo laboratory's robotic arm and a Payload and ORU Accommodation (POA), working with cabling and reseating a protective shield on the outside the Unity module. Wilmore and Melvin will drive the station's robotic arm to support the spacewalkers.

The fifth day is available for focused inspection of Atlantis' heat shield if mission managers deem it necessary, a move to position the station's robotic arm for the following day's ELC-2 transfer, and for preparations for the second spacewalk.

Day six will focus on the second spacewalk of the mission by Foreman and Bresnik. They'll install a Grappling Adaptor to On-orbit Railing (GATOR) assembly to the outside of the Columbus laboratory as part of a project is to demonstrate the performance of two different Automatic Identification System (AIS) receivers to identify and locate ships on the ocean. They'll also relocate a Floating Potential Measurement Unit, which is used to measure the electrical charge that occurs on the station's shell as it interacts with the natural plasma in low-Earth orbit. They'll also deploy an Earth-facing Payload Adapter System (PAS) on the station's truss and install a Wireless Video System (WVS) External Transceiver Assembly Wireless Video System External Transceiver Assembly (WETA).

Half a day off is planned for the crew on the seventh day of the mission before the crew begins gearing up for the third and final planned spacewalk by Bresnik and Satcher. On the eighth day of the flight, they'll transfer a High Pressure Gas Tank (HPGT) full of oxygen from ELC-2 to a spot on the outside of the Quest airlock, placing it amidst the other dog house-shaped tanks that are used to replenish atmosphere lost when spacewalkers enter and exit the station. They'll also deploy a PAS on the space-facing side of the starboard truss and reseat debris shields on the airlock.

The final full day of docked operations will include some additional time off for the crew to rest up after their busy spacewalk pace, but focus on preparations for Atlantis' undocking and departure on the following day. The crew will finish packing, reconfigure spacesuits and transfer them to Atlantis, and check out the rendezvous tools that will be used for undocking, fly-around and separation. The Atlantis crew, with Stott now a member, will say their farewells to the five-member station crew, close the hatches between the two spacecraft and get a good night's rest.

After Atlantis undocks at 4:57 a.m. EST Nov. 25, Wilmore will guide the shuttle on a 360-degree fly-around of the station so that other crew members can documents the exterior condition of the orbiting outpost, with all of its new spare parts in position. After the fly-around is complete, Wilmore, Melvin and Bresknik will conduct one last inspection of Atlantis' heat shield using the shuttle's Canadarm and the OBSS.

Astronauts Charlie Hobaugh (standing), STS-129 commander; and Randy Bresnik, mission specialist, use the virtual reality lab in the Space Vehicle Mock-up Facility at NASA's Johnson Space Center to train for some of their duties aboard the space shuttle and space station. This type of computer interface, paired with virtual reality training hardware and software, helps to prepare the entire team for dealing with space station elements.

The last full day of orbital activities by the STS-129 crew will focus on landing preparations. Hobaugh, Wilmore and Bresnik will conduct the traditional checkout of the shuttle's flight control systems and steering jets, setting Atlantis up for its supersonic return to Earth. A special recumbent seat will be set up in the shuttle's lower deck for Stott to ease her reorientation to Earth's gravity for the first time in more than three months.

On the 12th day of the mission, weather permitting, Hobaugh and Wilmore will guide Atlantis to a landing at the Kennedy Space Center at 9:57 a.m. EST Nov. 27 to wrap up the 31st flight for Atlantis, the 129th mission in shuttle program history and the 31st shuttle visit to the International Space Station.

ISS020E038726

NASA astronaut Nicole Stott, Expedition 20 flight engineer, is pictured in the Leonardo Multi-Purpose Logistics Module (MPLM), temporarily attached to the International Space Station while space shuttle Discovery (STS-128) remains docked with the station.

STS-129 TIMELINE OVERVIEW

Flight Day 1

- Launch
- Payload Bay Door Opening
- Ku-Band Antenna Deployment
- Shuttle Robotic Arm Activation and payload bay survey
- Umbilical Well and Handheld External Tank Photo and TV Downlink

Flight Day 2

- Atlantis' Thermal Protection System Survey with Shuttle Robotic Arm/Orbiter Boom Sensor System (OBSS)
- Extravehicular Mobility Unit Checkout
- Centerline Camera Installation
- Orbiter Docking System Ring Extension
- Orbital Maneuvering System Pod Survey
- Rendezvous tools checkout
- Shuttle RMS grapple of ELC1 in payload bay

Flight Day 3

- Rendezvous with the International Space Station
- Rendezvous Pitch Maneuver Photography of Atlantis' Thermal Protection System by Stott and Williams of the Expedition 21 crew
- Docking to Harmony/Pressurized Mating Adapter-2
- Hatch Opening and Welcoming (Stott becomes a Shuttle crewmember at hatch opening; no crew exchange)
- Shuttle RMS unberth and handoff of ELC1 to Canadarm2
- Installation of ELC1 on P3 truss lower outboard attachment point
- Cargo transfer from MRM2 to ISS
- Spacewalk 1 procedure review
- Spacewalk 1 campout in Quest airlock by Foreman and Satcher

Flight Day 4

- Spacewalk 1 by Foreman and Satcher (installation of spare S-band antenna assembly on Z1 truss, routing of cables for the Space to Ground Antenna, lubrication of the Payload Orbital Replacement System Attachment on the Mobile Base System and the end effector of the Kibo robotic arm, cable preparations for STS-130)

Flight Day 5

- Canadarm2 grapple of OBSS and handoff to Shuttle RMS
- Focused inspection of Atlantis' thermal protection system with the OBSS

- Spacewalk 2 procedure review
- Spacewalk 2 campout in Quest airlock by Foreman and Bresnik

Flight Day 6

- Shuttle RMS grapple and unberth of ELC2
- Shuttle RMS handoff of ELC2 to Canadarm2
- ELC2 installation on S3 upper outboard attachment point
- Spacewalk 2 by Foreman and Bresnik (GATOR ham radio equipment installation on Columbus, Floating Point Measurement Unit relocation, S3 truss nadir payload attachment system deployment, camera wireless system installation on S3 truss)
- MRM2 thermal control system activation

Flight Day 7

- Crew off duty time
- Spacewalk 3 procedure review
- Spacewalk 3 campout in Quest airlock by Satcher and Bresnik

Flight Day 8

- Spacewalk 3 by Satcher and Bresnik (Transfer of High Pressure Oxygen Gas Tank and MISSE 7 to Quest, S3 nadir payload attachment system deploy, jettisoning of MMOD shields)

Flight Day 9

- Joint Crew News Conference
- Crew off duty time
- Farewells and hatch closure
- Rendezvous tools checkout

Flight Day 10

- Atlantis undocking from ISS PMA-2
- Flyaround of ISS and final separation
- Late inspection of Atlantis' thermal protection system with the OBSS

Flight Day 11

- Flight Control System Checkout
- Reaction Control System hot-fire test
- Crew Deorbit Briefing
- Cabin Stowage
- Recumbent Seat Setup for Stott

Flight Day 12

- Deorbit preparations
- Payload Bay Door closing
- Deorbit burn
- KSC Landing

MISSION PROFILE

CREW

Commander:	Charles O. Hobaugh
Pilot:	Barry E. Wilmore
Mission Specialist 1:	Randy Bresnik
Mission Specialist 2:	Mike Foreman
Mission Specialist 3:	Leland Melvin
Mission Specialist 4:	Robert Satcher, Jr.
Mission Specialist 5:	Nicole Stott (Down)

LAUNCH

Orbiter:	Atlantis (OV-104)
Launch Site:	Kennedy Space Center Launch Pad 39A
Launch Date:	Nov. 16, 2009
Launch Time:	2:28 p.m. EST
Launch Window:	5 minutes
Altitude:	122 Nautical Miles (140 Miles) Orbital Insertion; 191 NM (220 Miles) Rendezvous
Inclination:	51.6 Degrees
Duration:	10 Days 19 Hours 19 Minutes

VEHICLE DATA

Shuttle Liftoff Weight:	4,522,383 pounds
Orbiter/Payload Liftoff Weight:	266,424 pounds
Orbiter/Payload Landing Weight:	205,168 pounds
Software Version:	OI-34

Space Shuttle Main Engines:

SSME 1:	2048
SSME 2:	2044
SSME 3:	2058
External Tank:	ET-133
SRB Set:	BI-140
RSRM Set:	108

SHUTTLE ABORTS

Abort Landing Sites

RTLS:	Kennedy Space Center Shuttle Landing Facility
TAL:	Primary – Zaragoza, Spain. Alternates – Moron, Spain and Istres, France
AOA:	Primary – Kennedy Space Center Shuttle Landing Facility. Alternate – White Sands Space Harbor

LANDING

Landing Date:	Nov. 27, 2009
Landing Time:	9:57 a.m. EST
Primary landing Site:	Kennedy Space Center Shuttle Landing Facility

PAYLOADS

ULF-33-ExPRESS Logistics Carrier 1 & 2 , ExPRESS Logistics Carrier (ELC)

This page intentionally blank.

MISSION OBJECTIVES

MAJOR OBJECTIVES

1. Return Expedition 21 Flight Engineer-2 (17A) crew member Nicole Stott.

2. Install, activate, and check out ExPRESS Logistics Carrier (ELC)1 on an Unpressurized Cargo Carrier Attachment System (UCCAS) on the port side of the station's backbone.

3. Install ELC2 to an upper outboard Payload Adapter System (PAS) on the starboard side of the station's backbone, activate and check out.

4. Transfer S-Band Antenna and Support Assembly (SASA) to Z1 location on station and apply heater and operation power.

5. Install Materials International Space Station Experiment-7 onto ELC2, activate and check out.

6. Prepare for Node 3 (Tranquility) arrival.

   – Remove handrail on Unity and replace with ammonia line routing bracket.

   – Reposition Zarya Local Area Network (LAN) connector on Unity and tie down Micrometeoroid Orbital Debris shield.

   – Connect the P181 electrical power connector for Unity.

7. Transfer and install spare oxygen High Pressure Gas Tank from ELC2 to station airlock.

8. Deploy the Common Attach System site for External Stowage Platform-3 relocation.

9. Install Unity port bulkhead feedthroughs (if not performed in Stage).

10. Install Unity avionics and fluids modification kit.

11. Install Unity intermodule ventilation modification kit.

12. Remove and replace airlock battery charger modules.

13. Perform Payloads of Opportunity – Maui Analysis of Upper Atmospheric Injections (MAUI), Ram Burn Observations-2 (RAMBO-2), Shuttle Exhaust Ion Turbulence Experiment (SEITE) and Shuttle Ionospheric Modification with Pulsed Local Exhaust (SIMPLEX).

This page intentionally blank

MISSION PERSONNEL

KEY CONSOLE POSITIONS FOR STS-129

	Flt. Director	CAPCOM	PAO
Ascent	Bryan Lunney	Chris Ferguson Steve Frick (Wx)	Rob Navias
Orbit 1 (Lead)	Mike Sarafin	Stan Love	Josh Byerly
Orbit 2	Gary Horlacher	Megan McArthur	Kelly Humphries
Planning	Paul Dye	Aki Hoshide	TBD
Entry	Bryan Lunney	Chris Ferguson Steve Frick (Wx)	Brandi Dean
Shuttle Team 4	Kwatsi Alibaruho	N/A	N/A
ISS Orbit 1	Emily Nelson	Drew Feustel	N/A
ISS Orbit 2 (Lead)	Brian Smith	Steve Swanson	N/A
ISS Orbit 3	Jerry Jason	Ryan Lien	N/A
Station Team 4	TBD		

JSC PAO Representative at KSC for Launch – Kyle Herring

KSC Launch Commentator – George Diller

KSC Launch Director – Mike Leinbach

NASA Launch Test Director – Steve Payne

This page intentionally blank

STS-129 CREW

For STS-129, the sun shines brightly on the International Space Station above and the United States below representing the bright future of U.S. human spaceflight. The contiguous U.S., Rocky Mountains, and Great Desert Southwest are clearly visible on the Earth below, encompassing all the NASA centers and the homes of the many dedicated people who work to make our space program possible. The integrated shapes of the patch signify the two ExPRESS Logistics Carriers that will be delivered by STS-129 providing valuable equipment and ensuring the longevity of the space station. The space shuttle is vividly silhouetted by the sun highlighting how brightly the orbiters have performed as a workhorse for the U.S. space program over the past three decades. The space shuttle ascends on the astronaut symbol portrayed by the red, white and blue swoosh bounded by the gold halo. This symbol is worn with pride by this U.S. crew representing their country on STS-129. The names of the crew members are denoted on the outer band of the patch. As STS-129 launches, the space shuttle is in its twilight years. This fact is juxtaposed by the 13 stars on the patch which are symbolic of our children who are the future. The moon and Mars are featured predominantly to represent just how close humankind is to reaching further exploration of those heavenly bodies and how the current space shuttle and station missions are laying the essential groundwork for those future endeavors.

Pictured on the front row are astronauts Charles O. Hobaugh (left), commander; and Barry E. Wilmore, pilot. From the left (back row) are astronauts Leland Melvin, Mike Foreman, Robert L. Satcher Jr. and Randy Bresnik, all mission specialists.

Short biographical sketches of the crew follow with detailed background available at: http://www.jsc.nasa.gov/Bios/

STS-129 CREW BIOGRAPHIES

Charles O. Hobaugh

Veteran astronaut Charles O. Hobaugh, a colonel in the U.S. Marine Corps, will lead the crew of STS-129. He served as pilot on STS-104 in 2001 and STS-118 in 2007. Hobaugh has overall responsibility for the safety and execution of the mission, orbiter systems operations, and flight operations, including landing. He will also fly Atlantis through its rendezvous and docking to the International Space Station.

Barry E. Wilmore

Barry E. Wilmore, a captain in the U.S. Navy, will serve as pilot for Atlantis. This will be his first journey into space. Selected by NASA in 2000, he has served in various shuttle technical jobs and on the astronaut support team. He will be responsible for orbiter systems operations, will assist Hobaugh with rendezvous, and will fly the orbiter during undocking and the flyaround.

Randy Bresnik

Randy Bresnik, a lieutenant colonel in the U.S. Marine Corps, will serve as a mission specialist for the space shuttle Atlantis. Selected by NASA in 2004 as a pilot, he was assigned as Astronaut Office support for International Space Station, Automated Transfer Vehicle, H-II Transfer Vehicle, and Constellation programs. This will be his first journey to space. Bresnik will participate in two of the three planned spacewalks.

Mike Foreman

Mike Foreman, a retired U.S. Navy captain, will serve as a mission specialist aboard Atlantis. He served as a mission specialist on STS-123 in 2008. Selected by NASA in 1998, he was assigned technical duties in the Astronaut Office Space Shuttle Branch and served as Deputy of the Space Shuttle Branch. Foreman will participate in two of the three planned spacewalks.

Leland Melvin

Astronaut Leland Melvin will serve as a mission specialist on Atlantis. He flew on STS-122 in 2008 as a mission specialist. He has served numerous organizations within NASA including the Education Department at NASA Headquarters, Washington, D.C. Melvin has traveled across the country engaging thousands of students and teachers in the excitement of space exploration, and inspiring them to pursue careers in science, technology, engineering, and mathematics.

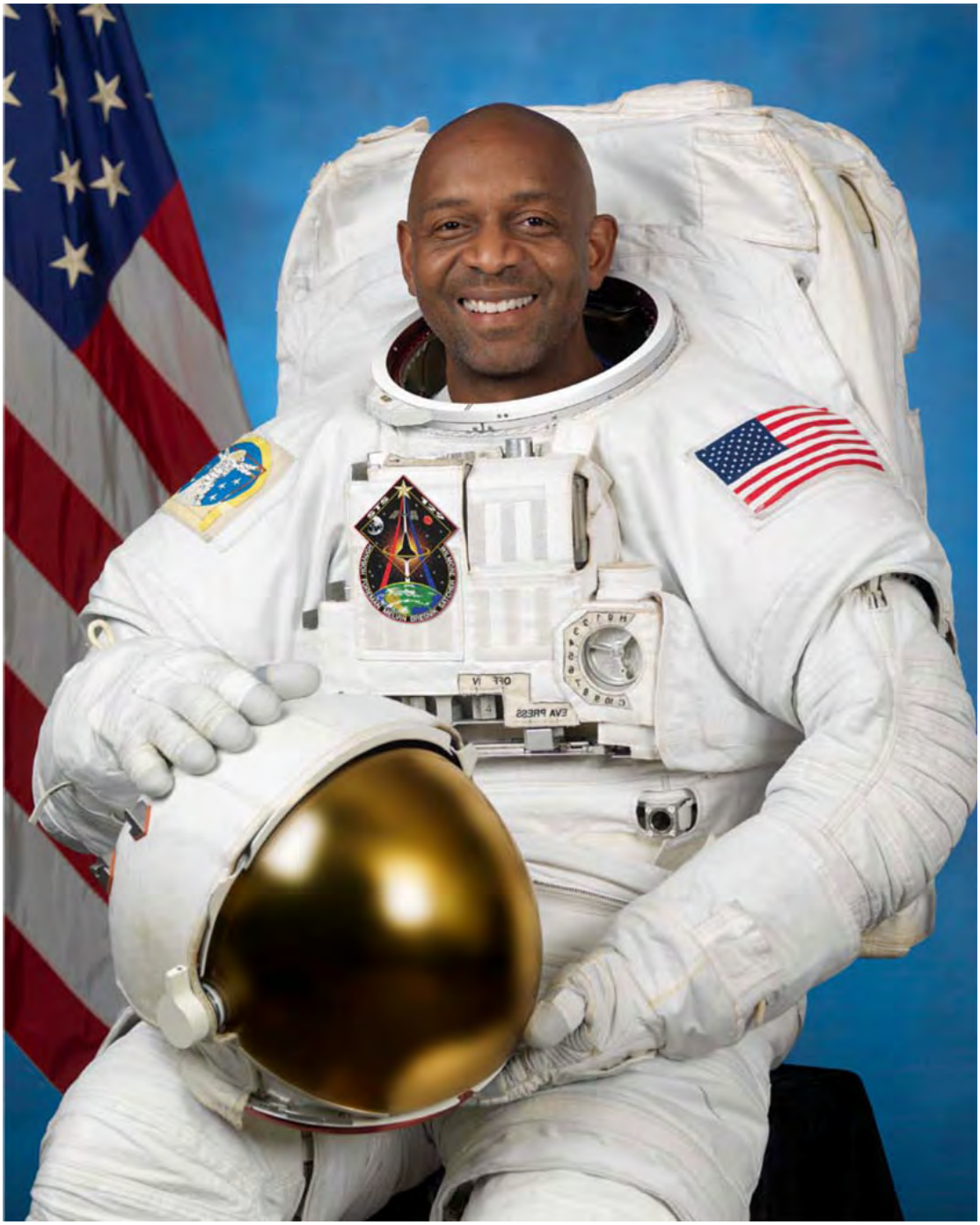

Robert L. Satcher Jr.

This is the first spaceflight for Robert L. Satcher Jr. He was selected by NASA in 2004 and completed his initial training in 2006. Satcher worked as an orthopedic surgeon and did medical missions in Venezuela and Nigeria. He will participate in two of the three planned spacewalks.

Nicole Stott

Nicole Stott was selected as a NASA astronaut in 2000. She has worked technical aspects of station payloads, supported Expedition 10 and has served as a station CAPCOM. Stott launched to the station with the crew of STS-128 to replace Tim Kopra as a flight engineer on Expeditions 20 and 21. She will return with the STS-129 shuttle crew.

This page intentionally blank

PAYLOAD OVERVIEW

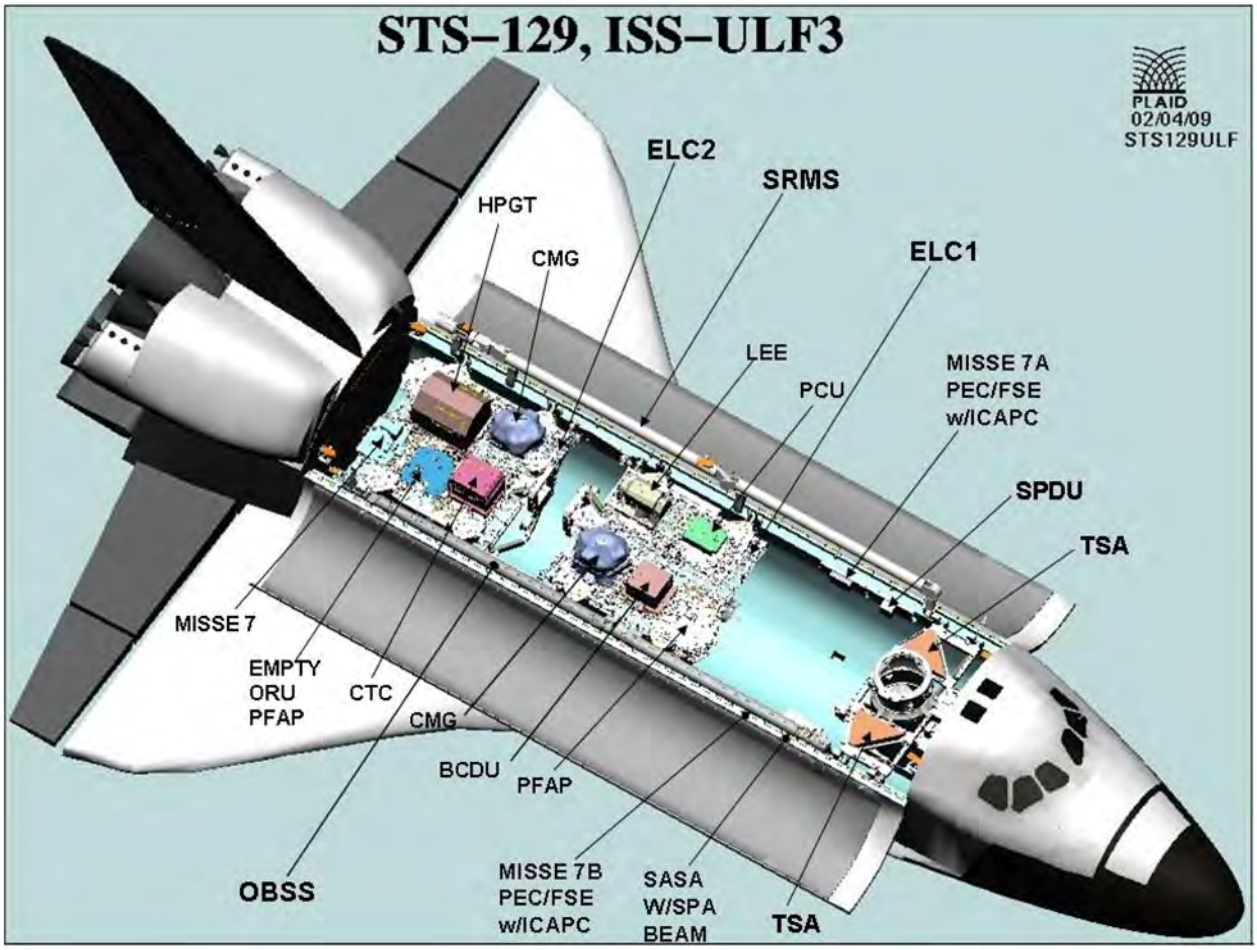

The STS-129 mission is a utility logistics support mission and will carry a number of spare parts, science experiments, and other items in its middeck and payload bay. The payload going up is approximately 29,458 pounds, not counting the middeck portion. The expected return weight in the payload bay is approximately 2,850 pounds.

On the middeck of the space shuttle, it will carry GLACIER, which is a freezer designed to provide cryogenic transportation and preservation capability for samples. The unit is a double locker equivalent unit capable of transport and operation in the middeck and on-orbit operation in the Expedite the Processing of Experiments to the Space Station (ExPRESS) rack.

The space shuttle will carry on its middeck (ascent) the following items: Advanced Biological Research System, National Lab Pathfinder (NLP) Cells/ Commercial Generic Bioprocessing Apparatus

(CGBA), Mice Drawer System (MDS), NLP Vaccine, Advanced Plant EXperiments on Orbit-Cambium (APEX-Cambium), Japan Aerospace and Exploration Agency (JAXA) RNA interference and protein phosphorylation in space environment using the nematode Caenorhabditis elegans (CERISE) & Hair, European Space Agency (ESA) Dose Distribution inside the ISS (DOSIS), Human Research Program (HRP) Sample Collection Kits, and the Integrated Immune and Sleep Short.

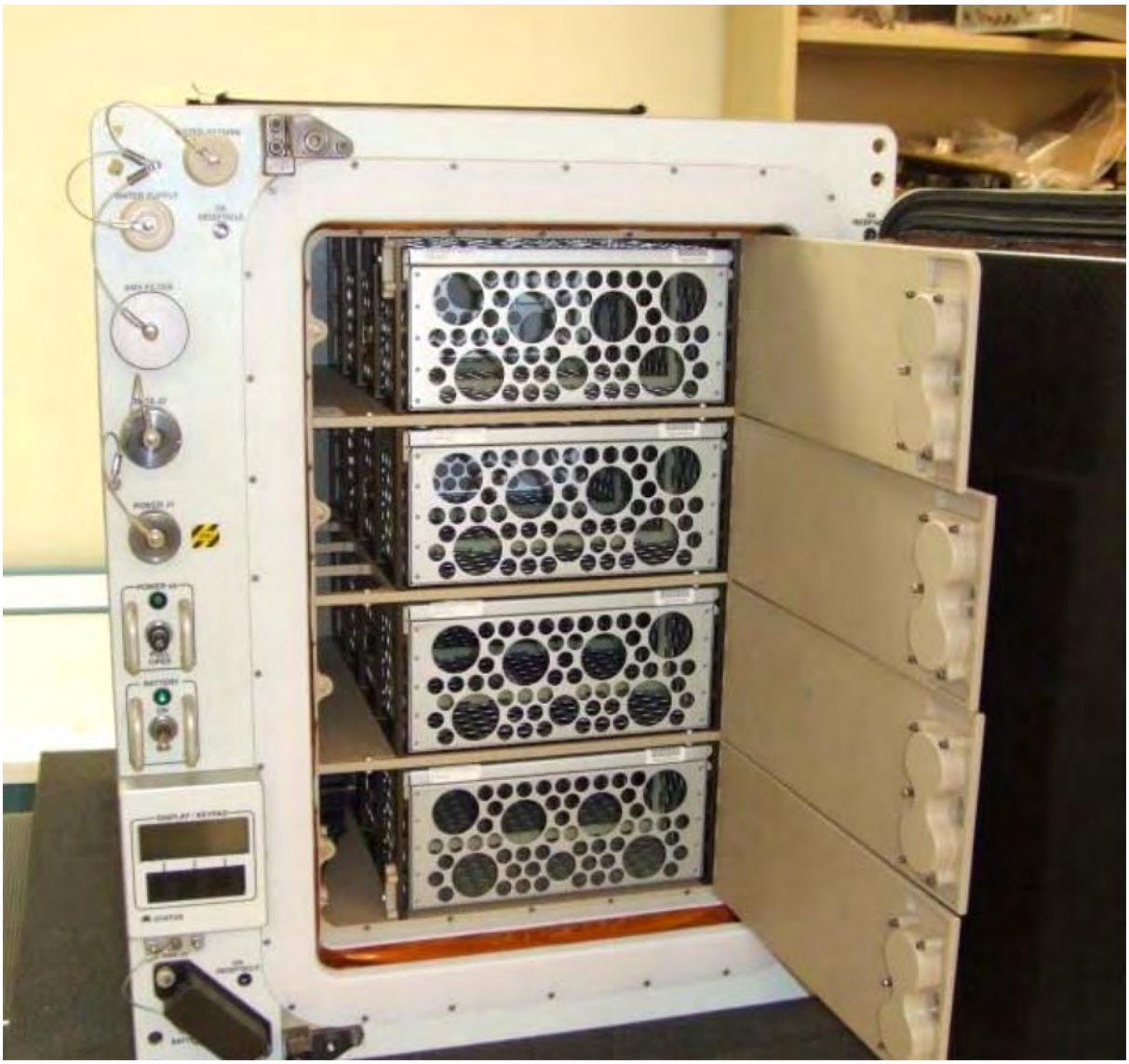

GLACIER, a freezer for transportation and preservation of samples, will be carried on the middeck of Atlantis.

S-BAND ANTENNA SUPPORT ASSEMBLY (SASA) AND RADIO FREQUENCY GROUP (RFG)

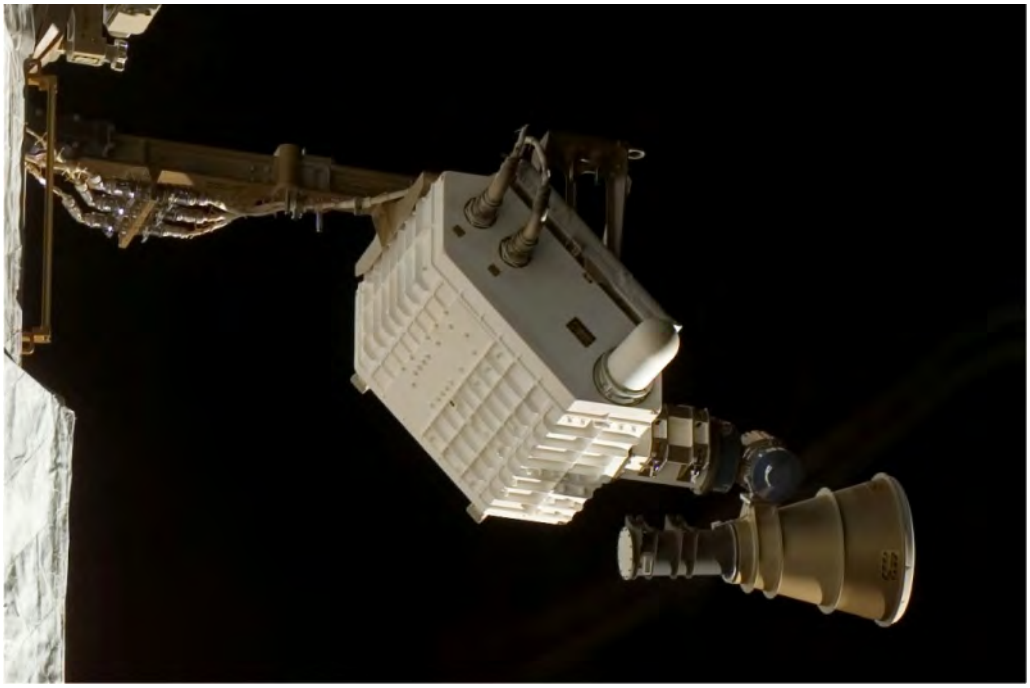

STS-129/ULF3 will carry the S-band Antenna Support Assembly (SASA) that will be attached to the sidewall inside the space shuttle payload pay. The SASA is an assembly that consists of the Assembly Contingency Radio Frequency Group (RFG or ACRFG), SASA Boom and Avionics Wire Harness.

The SASA supports the RFG either on Port 1 or Starboard 1 truss. The major functions of the RFG are to receive a radio signal from the transponder, amplify it to a power level necessary to be acquired by the Tracking Data and Relay Satellite, and broadcast that signal through the selected antenna. Also, the RFG receives a signal from the TDRS through the antenna, amplifies it, and sends it to the transponder for demodulation. The RFG consists of three units: the Assembly/Contingency (S-Band) Transmitter/Receiver Assembly (ACTRA), a High Gain Antenna (HGA), and a Low Gain Antenna (LGA).

The SASA boom assembly consists of a mast, an Extravehicular Activity (EVA) handle, a harness, a connector panel, a mounting surface for the RFG, and a baseplate fitting. The baseplate fitting is the structural interface for mounting the SASA to the truss on the ISS. The Avionics Wire Harness is installed on the SASA Boom Assembly. Through the harness, operational and heater power are provided to the RFG; command and status signals and RF transmit and receive signals are sent to and from RFG.

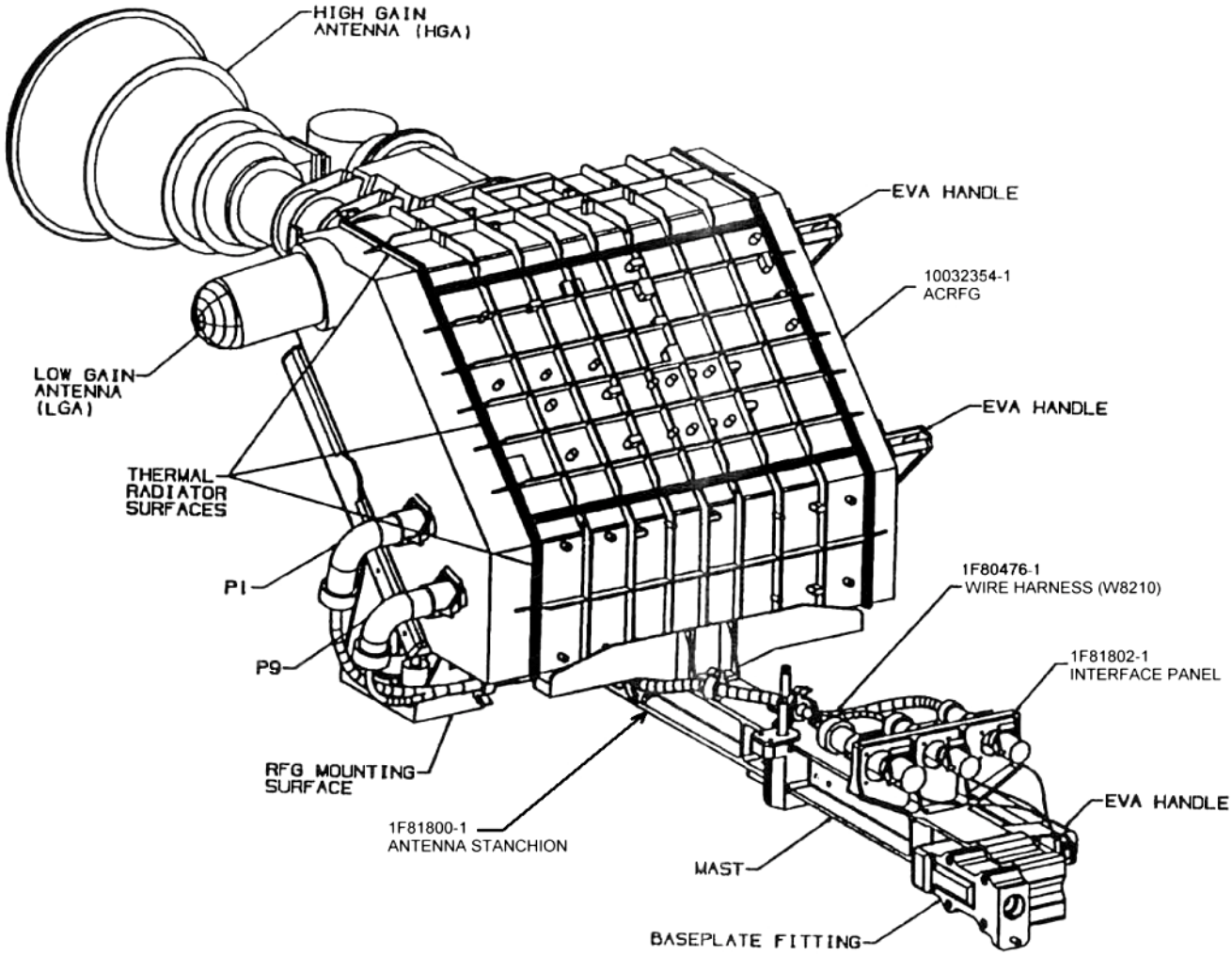

The total envelope of the RFG is 36 inches × 59 inches × 33 inches (maximum dimensions). The SASA Boom is 61 inches × 30 1/4 inches × 43 inches. The entire SASA weighs 256 pounds. The unit that is being flown on this mission was refurbished by MacDonald Dettwiler and Associates Ltd. (MDA), under contract to Boeing, after it was returned in October 2007 after it had failed on orbit in September 2006 (it was replaced then with an on-orbit spare). This unit will be installed on the Zenith 1 truss as a spare.

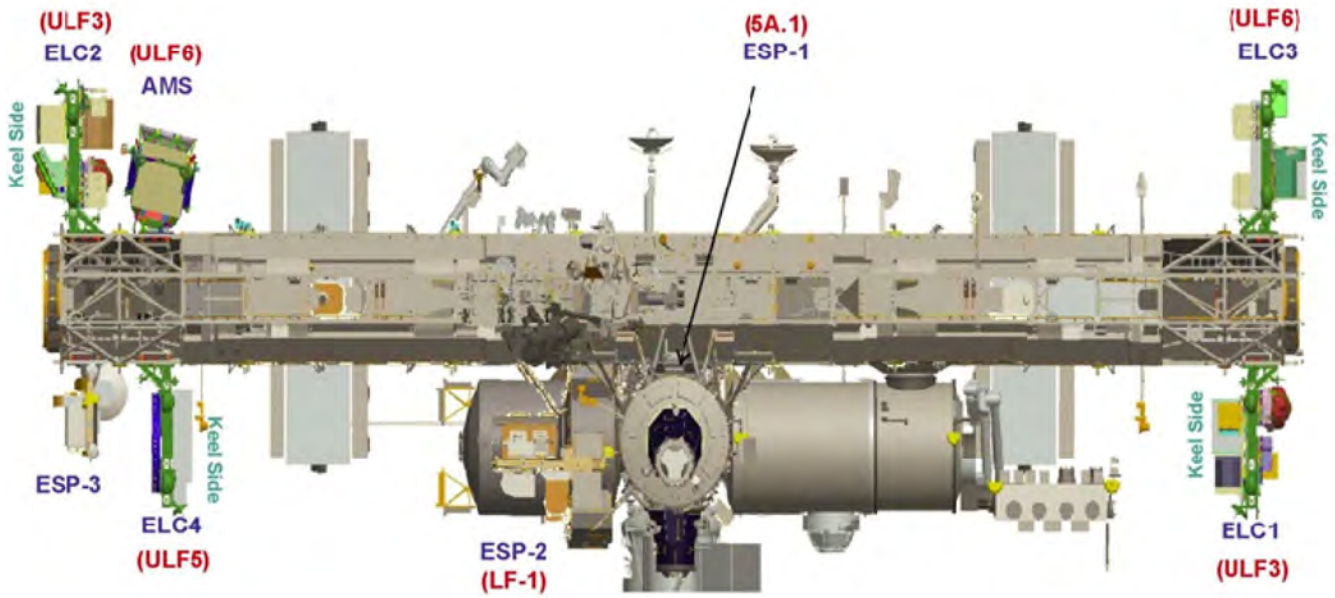

The International Space Station will contain several unpressurized platforms that include ELC1 - 4 and External Storage Platforms (ESP) 1 – 2.

EXPRESS LOGISTICS CARRIER 1 AND 2

The ExPRESS Logistics Carrier (ELC) is a platform designed to support external payloads mounted to the International Space Station (ISS) starboard and port trusses with either deep space or Earthward views. Each pallet spans the entire width of the shuttle's payload bay, carries science experiments, and serves as a parking place for spare hardware that can be replaced robotically once on-orbit. STS-129/ULF3 will mark the first flight of ELC1 and 2. ELC1 and 2 are grappled by the space shuttle and station robotics arms and are placed on the station's truss structure. ELC1 is mounted on the Port 3 truss element UCCAS while ELC2 is placed on the Starboard 3 truss upper outboard PAS. The UCCAS and PAS were deployed during the STS-128 mission.

The weight of ELC1 is approximately 13,850 pounds; ELC2 weighs 13,400 pounds. Both ELC1 and 2 measure approximately 16 feet by 14 feet (without the ORUs installed). Because of their expertise in building the Hubble Space Telescope (HST) cargo carriers, NASA Goddard Space Center served as the overall integrator and manufacturer for ELC1 and 2. Remmele Engineering, based in Minneapolis, Minn., built the integral aluminum ELC decks for NASA. Engineers from GSFC's Carriers Development Office developed the challenging, lightweight ELC design, which incorporates elements of both the Express Pallet and the Unpressurized Logistics Carrier.

The ELC is designed to be carried in the space shuttle cargo bay to the ISS, fully integrated with cargo and/or payloads. Four ELCs will be delivered to ISS before the scheduled retirement of the space shuttle. Two ELCs will be attached to the starboard truss 3 (S3) and two ELCs will be attached to the port

truss 3 (P3). By attaching at the S3/P3 sites, a variety of views such as zenith (deep space) or nadir (Earthward) direction with a combination of ram (forward) or wake (aft) pointing allows for many possible viewing opportunities.

Each ELC can accommodate 12 Flight Releasable Attachment Mechanism (FRAM)-based cargos that includes two payload attached sites with full avionics accommodation. The mass capacity for an ELC is 9,800 pounds (4,445 kg) with a volume of 98 feet (30 meters) cubed. The ISS provides power to the ELCs through two 3 Kilowatt (kW), 120 Volts direct current (V dc) feeds at the ISS to ELC interface. The ELC power distribution module converts the 120 V dc power to 120 V dc and 28 V dc. Both power voltages are provided to each payload attached site by separated buses. 120 V dc power is also provided to the other cargo attached site. Upon installation of the ELCs, it may take up to 4 hours for the power to be connected.

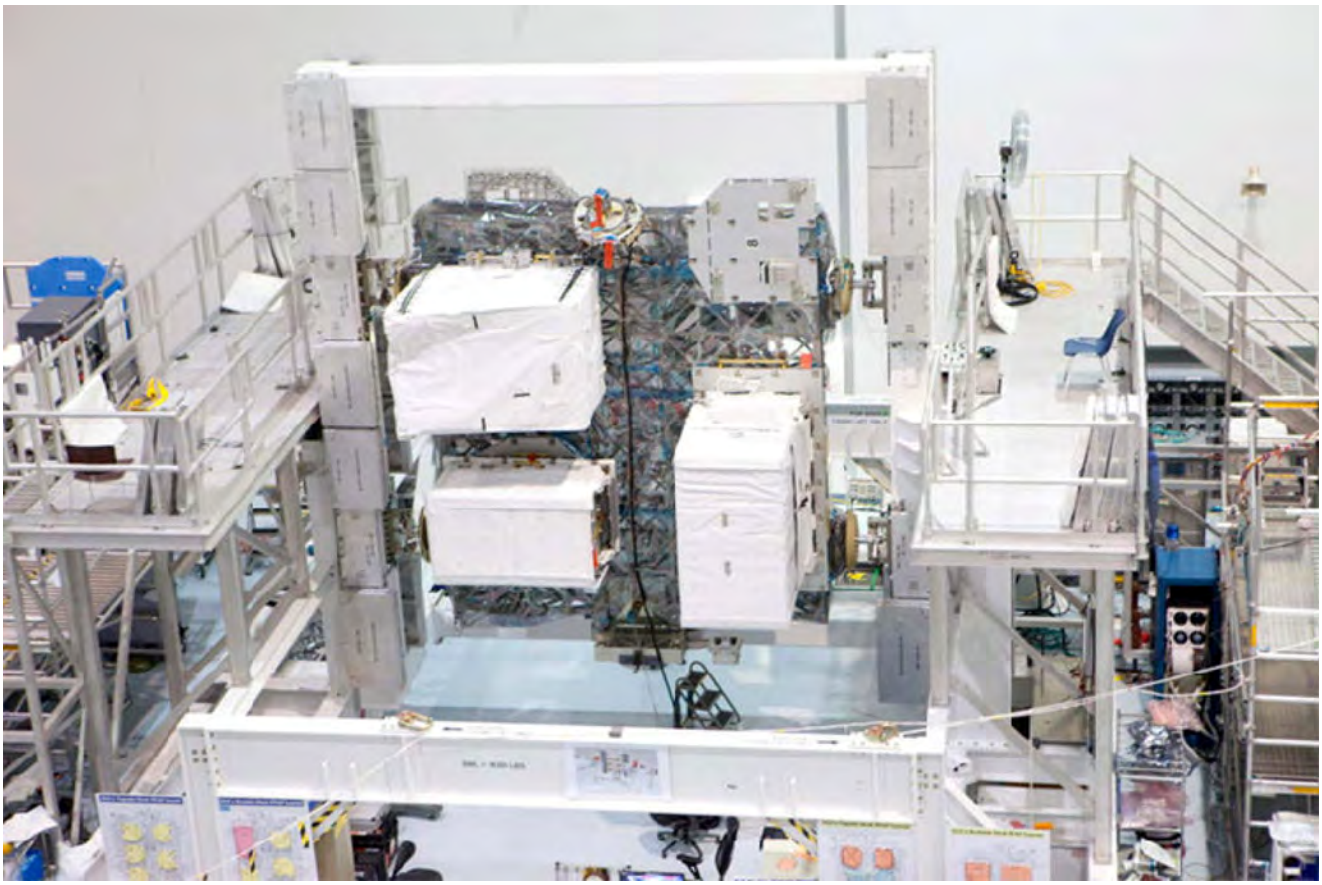

Shown here is the ExPRESS Logistics Carrier 2 (ELC2) with its various Orbital Replacement Units installed. Provided by NASA Goddard Space Center, ELC1 and 2 are brand new and are flying for the first time on the space shuttle. The special rotation rack shown here had to be built for these unique ISS platforms so the ORUs could be installed on the top and bottom.

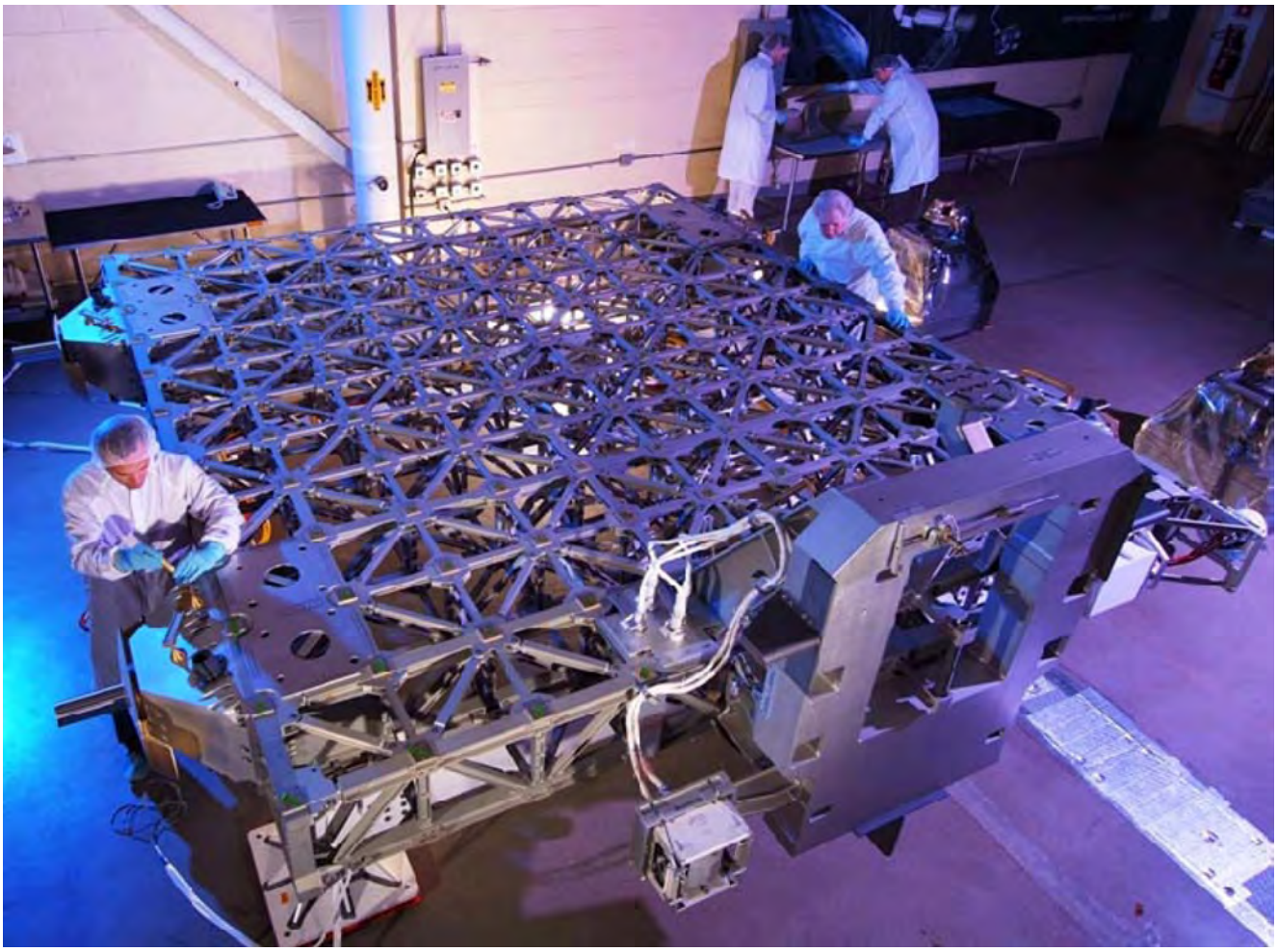

NASA Goddard Space Flight Center technicians prepare the ELC1 in the high bay clean room before it was shipped to KSC December 2008 for additional work. In the foreground, you can see a large square where the ELC attaches to the ISS as well as the electrical connections.

At the ISS to ELC interface, there are two types of data ports: the High Rate Data Link (HRDL) and the Low Rate Data Link (LRDL). The HRDL uses fiber optics to provide ISS to ELC communication. At the ELC avionics module to payload interface, there are three data ports: HRDL, LRDL and Medium Rate Data Link (MDRL, Ethernet). For uplink MDRL, Ethernet is used; the ELC avionics module will convert the MDRL signal from HDRL interface and delivered to each payload attached site. The transmission rate between ELC avionics module to each payload attached site is no higher than 10 Mbps (megabits per second). For downlink MDRL and HDRL signals, they will be transmitted from the payload attached site to ELC avionics module by separated buses. The ELC avionics module will combine these two signals and send to ISS by using HDRL interface. The HDRL downlink service to the ground rate is no higher than 95 Mbps. The LRDL is for a two ways data/command distribution to/from each payload attached site via the ELC avionics module at maximum rate

of 1 Mbps. External camera ports are also available for the ELC payloads. There are at least 14 camera port locations along the trusses that can be used for payload observation.

Five ELC units were built, with them all having full up avionics subsystems to support experiments' Command and Data Handling task. Manifested on ELC2 is the first ELC-based payload, Materials for ISS Experiment (MISSE-7). ELC4 is currently slated for mission STS-134 Endeavour, to launch July 29, 2010. ELC3 is currently slated for mission STS-133 Discovery, launching on Sept. 16, 2010. ELC5 is not manifested and is considered a flight spare. This extremely aggressive effort required the talents of more than 100 employees from GSFC, JSC, and KSC who worked together on the project.

A total of 14 large Orbital Replacement Units (ORUs) are being carried on ELC1 and 2. All of the hardware for this mission was processed by Boeing under its Checkout, Assembly and Payload Processing Services (CAPPS) contract with NASA. The STS-129 mission marks the largest number of spare ORUs processed in a single mission under the CAPPS contract. The ORUs include the Ammonia Tank Assembly (ATA), Battery Charger Discharge Unit (BCDU), Cargo Transportation Container (CTC), two Control Moment Gyroscopes (CMG), High-Pressure Gas Tank (HPGT), Canadarm2 Latching End Effector (LEE), Materials International Space Station Experiment 7 (MISSE-7), two Nitrogen Tank Assemblies (NTA), Plasma Contactor Unit (PCU), two Pump Module Assemblies (PMA) and a Trailing Umbilical System-Reel Assembly (TUS-RA).

ORBITAL REPLACEMENT UNITS (ORUS) ON ELC1

Ammonia Tank Assembly (ATA)

The primary function of the ATA is to store the ammonia used by the External Thermal Control System (ETCS). The major components in the ATA include two ammonia storage tanks, isolation valves, heaters, and various temperature, pressure, and quantity sensors. There is one ATA per loop located on the zenith side of the Starboard 1 (Loop A) and Port 1 (Loop B) truss segments. Each is used to fill their respective ETCS loop on startup (loops are launched with nitrogen in the lines) and to supply makeup fluid to that loop. It also assists the Pump Module (PM) accumulator with ammonia inventory management, and provides the capability to vent the PM and ATA by connection to an external nonpropulsive vent panel. The length is 57 inches by 80 inches width with a height of 45 inches. A new ATA, with 600 pounds of Ammonia, weighs approximately 1,702 pounds.

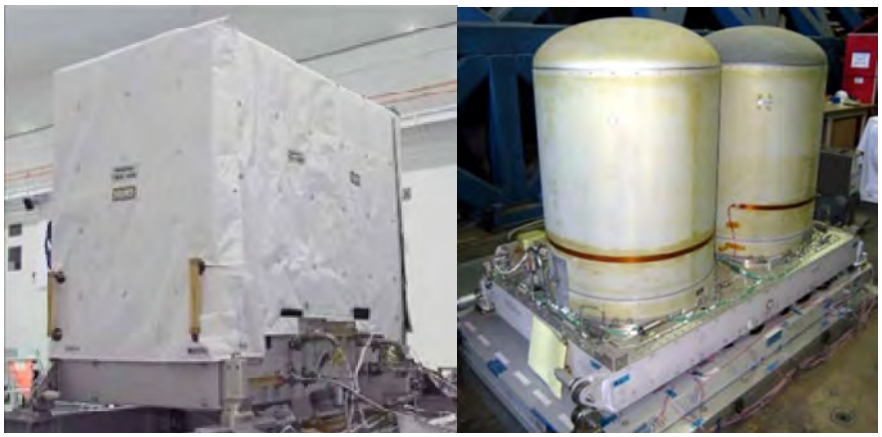

Cover is removed on the Amonia Tank Assembly.

Battery Charger Discharge Unit (BCDU)

The Battery Charge Discharge Unit (BCDU) is a bidirectional power converter that serves a dual function of charging the batteries during solar collection periods (isolation) and providing conditioned battery power to the primary power buses during eclipse periods. The BCDU has a battery charging capability of 8.4 kW and a continuous discharge capability of 6.6 kW (9.0 kW peak). The BCDU also includes provisions for battery status monitoring and protection from power circuit faults. The BCDU measures approximately 40 inches by 28 inches by 12 inches and weighs 235 pounds. There are 24 BCDUs on orbit that are used for normal Power System operation.

Control Moment Gyroscope (CMG)

Both the Russian and U.S. segments can maintain attitude control. When the Russian segment is in control, attitude is maintained by thrusters, which consume propellant. When the U.S. segment is in control, Control Moment Gyroscopes, manufactured by L3 Communications Space and Navigation under contract to Boeing, are used. The set of four CMGs balance the effects of gravity gradient, aerodynamic, and other disturbance torques (i.e., robotics, venting, and plume impingement), maintaining the station at an equilibrium attitude without using propellant. The CMGs can also be used to perform attitude maneuvers. The CMGs rely on electrical power provided by the solar powered electrical subsystem.

A CMG consists of a single-piece 25-inch diameter, 220-pound stainless steel flywheel that rotates at a constant speed of 6,600 rpm and develops an angular momentum of 3,600 ft-lb-sec (4,880 N-m-s) about its spin axis. This rotating wheel is mounted in a two-degree-of-freedom gimbal system that can position the spin axis (momentum vector) of the

wheel in any direction, allowing control torque generation in any direction. The station has four working CMGs that are mounted in the Zenith 1 truss segment. Each CMG assembly weighs approximately 600 pounds and measures 45 inches wide, 48 inches high, and 54 inches in length.

A CMG with it protective cover removed.

The CMGs have had some failures on board the ISS. Design improvements made to the spare CMGs, based on the findings from the two CMG failure investigations, include new bearing preload system materials, improvements to sliding fit lubrication, and modified covers and installation procedures to maintain bearing alignment.

Boeing technicians prepare to load a CMG onto an ELC.

Canadarm2 Latching End Effector (LEE)

The Canadian Mobile Servicing System (MSS), a space robotics system astronauts and cosmonauts use to assemble and maintain the International Space Station, consists of the Canadian Space Station Remote Manipulator System (SSRMS) or Canadarm 2, the Mobile Base System (MBS) and the Special Purpose Dexterous Manipulator (SPDM) or Dextre. The SSRMS has two identical grapple end points called LEE that enable it to reattach either end to the station as its new base. It moves in inch worm fashion around the U.S. segment by placing one end on a mounting point and disengaging its other end and using it to grapple a payload or another mounting point. Each mounting point provides power and data to the SSRMS.

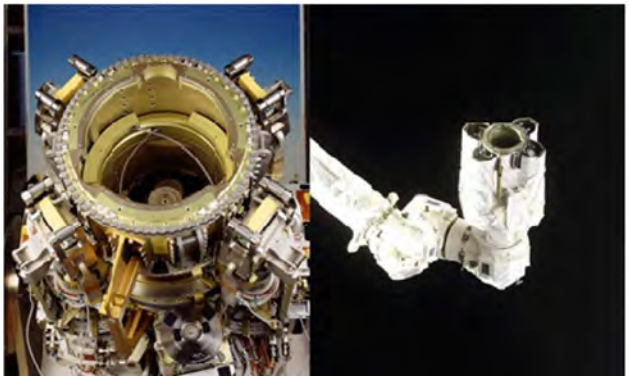

Close-up views of the Latching End Effector for the station's robotic arm.

The SSRMS can also be mounted on one of several mounting points on the MBS, a movable base that moves back and forth on the United States On-Orbit truss segments. The MBS itself has a LEE (called the Payload Orbital Replacement Unit (ORU) Accommodation (POA)) that is used for temporarily stowing and providing power to payloads. And the SPDM has a LEE that can be used for positioning the SPDM on the station or on the MBS or that can be used to grapple payloads when the SPDM itself is at the end of the SSRMS. The LEE, SSRMS, MBS, and SPDM are all built by MacDonald Dettwiler and Associates Ltd. (MDA) and are provided by the Canadian Space Agency.

The LEE or mechanical hand of the MSS allows the SSRMS, the SPDM or the MBS to capture stationary payloads by providing a large capture envelope (a cylinder 8 inches in diameter by 4 inches deep) and a mechanism/structure capable of soft docking and rigidizing. This action is accomplished by a two-stage mechanism in the LEE that closes three cables (like a snare) around a grapple probe (knobbed pin) bolted onto the payload and then draws it into the device until close contact is established and a load of approximately 1,100 pounds is imparted to the grapple probe. The payload remains attached to the MSS component by the forces developed by the LEE on the payload through the grapple probe that allows for maneuvering of the payload without separation from the LEE. The LEE measures about 42 inches in length and about 35 inches in height and 28 inches in width, and weighs about 415 pounds.

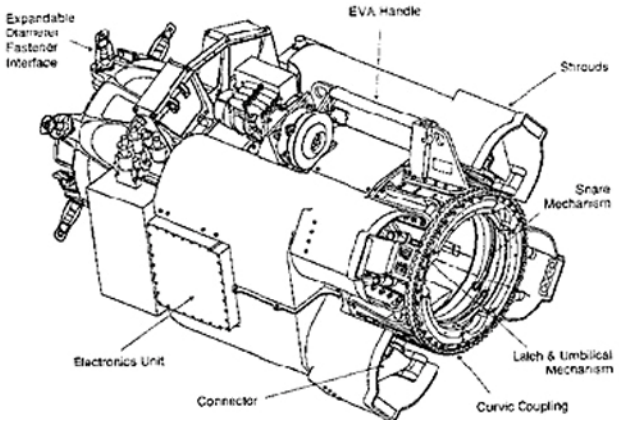

Nitrogen Tank Assembly (NTA)

The NTA provides a high-pressure gaseous nitrogen supply to control the flow of ammonia out of the ATA. The ATA contains two flexible, chambers incorporated into its ammonia tanks that expand as pressurized nitrogen expels liquid ammonia out of them. Designed by Boeing's Huntington Beach facility in California, the NTA controls ammonia pressure in the ATA as a key part of the External Active Thermal Control System, an external system that circulates ammonia to cool ISS segments.

Mounted to both of the Boeing-built Starboard 1 (S1) and P1 truss segments, the NTA is equipped with a Gas Pressure Regulating Valve (GPRV) and isolation valves as well as survival heaters. The GPRV and isolation valves provide control function and

over pressure protection of downstream components. The heaters prevent the electronic equipment from getting too cold.

Nitrogen tank assembly installed on the ELC.

The NTA's support structure is made largely of aluminum, and the tank is a carbon composite. The NTA ORU has a full tank with a weight of about 80 pounds of nitrogen at approximately 2,500 pounds per square inch (psi) of pressure – nearly 80 times the pressure of an average automotive tire at 30 psi. It also provides the capability to be refilled while on orbit through its nitrogen fill Quick Disconnect (QD). The NTA weighs approximately 550 pounds.

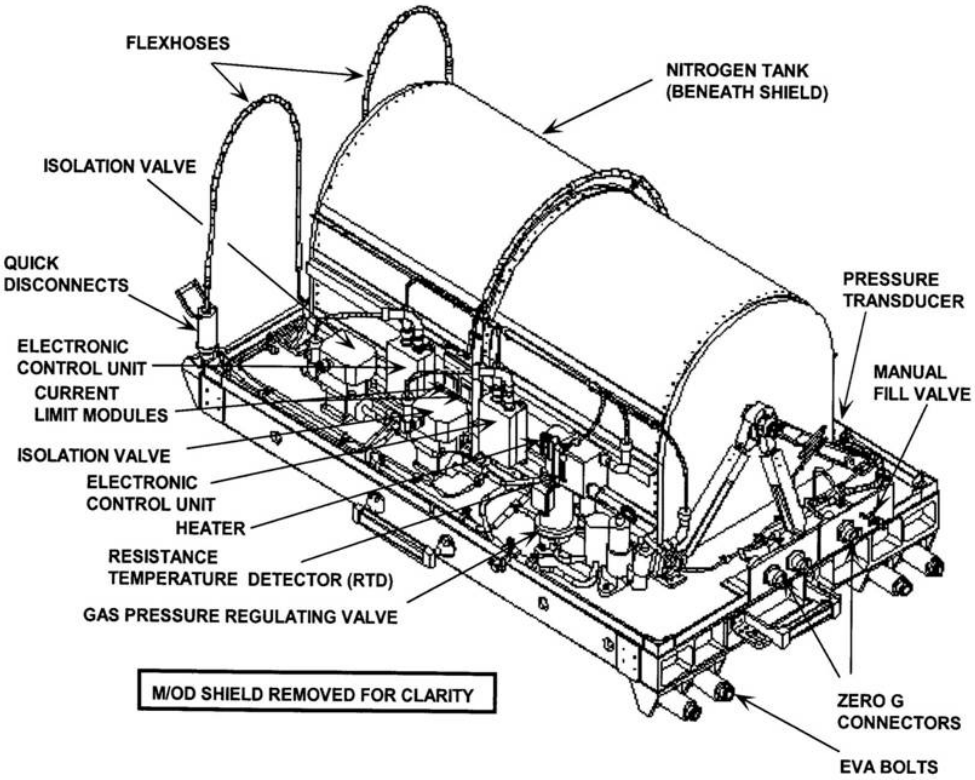

Plasma Contactor Unit (PCU)

As the International Space Station (ISS) travels through Low Earth Orbit (LEO), an electrical charge builds. This phenomenon can result in high voltages that may cause electrical discharges. These discharges, in turn, can damage precise electrical instruments and can also present a hazard to crew members performing EVA. The Plasma Contactor Unit (PCU) is used to disperse the electrical charge that builds up by providing an electrically conductive "ground path" to the plasma environment surrounding the ISS. This prevents the electrical discharges and provides a means of controlling crew shock hazard during EVA. There are two PCUs located on the ISS Zenith 1 Truss, both of which are operated during EVA.

Each PCU contains a Xenon tank and a Hollow Cathode Assembly (HCA). When commanded, the HCA emits electrons by converting Xenon gas into Xenon plasma, thus creating the ground path for the ISS electrical charge build-up. The PCU measures approximately 28 inches by 23 inches by 18 inches, and weighs approximately 350 pounds. The PCU is provided by Boeing and utilizes an HCA designed and fabricated at NASA's Glenn Research Center (GRC).

Pump Module Assembly (PMA)

The PMA is part of the station's complex Active Thermal Control System (ATCS), which provides vital cooling to internal and external avionics, crew members, and payloads. The station has two independent cooling loops. The external loops use an ammonia-based coolant and the internal loops use water cooling. At the heart of the ATCS is the pump module, which pumps the ammonia through the external system to provide cooling and eventually reject the residual heat into space via the radiators. The heat is generated by the electronic boxes throughout the station. Circulation, loop pressurization, and temperature control of the ammonia is provided by the Pump Module (PM). The major components in the PM include a Pump and Control Valve Package (PCVP), an accumulator, isolation and relief valves, and various temperatures, flow, and pressure sensors. The accumulator within the PM works in concert with the ATA accumulators to compensate for expansion and contraction of ammonia caused by the temperature changes and keeps the ammonia in the liquid phase via a fixed charge of pressurized nitrogen gas on the backside of its bellows. Manufactured by Boeing, the pump module weighs 780 pounds and measures approximately 5.5 feet (69 inches) long by 4 feet (50 inches) wide with a height of 3 feet (36 inches).

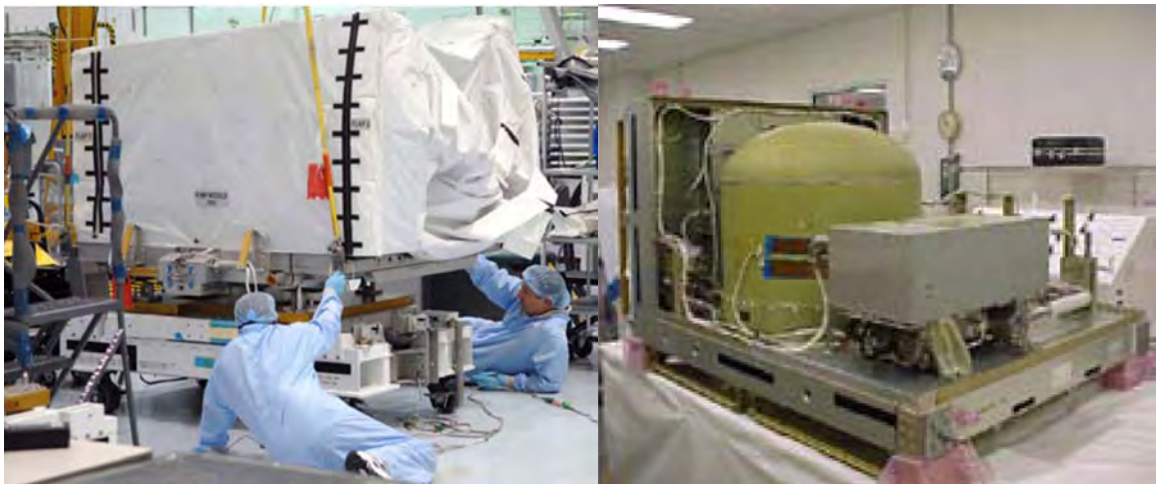

The PMA with and without its cover.

Passive Flight Releasable Attachment Mechanism (PFRAM)

ELC1 will contain two sites designated to accommodate payloads launched on other missions. NASA uses a system on the external carriers to attach to Orbital Replacement Units (ORUs) and payloads consisting of the Flight Releasable Attachment Mechanism. This mechanism has an active side with moving mechanical components, and a passive side that the active side engages with mechanically driven pins and latches. The active FRAM is driven by an EVA astronaut using a Pistol Grip Tool, or the station's robotic arm. These FRAM mechanisms are mounted to the ELC on Passive Flight Releasable Attachment Mechanism (PFRAM) Adapter Plate Assemblies (PFAPs) and also provide an electrical connection that can be used if needed by the ORU or payload being attached.

ORBITAL REPLACEMENT UNITS ON ELC2

Orbital Replacement Units on ELC2 include another CMG, Pump Module, NTA and one empty P/L PFRAM. Besides those items, it will also carry the following items:

Cargo Transportation Container (CTC)

ELC2 will carry a Cargo Transportation Container #1 that will contain 10 Remote Power Control Modules (like a large circuit breaker) and ORU Adapter Kits (OAKS) – basically brackets installed in the CTC to hold the ORUs. It will also carry an empty OAK. Orbital Sciences Corporation delivered five Cargo Transport Containers (CTCs) to NASA for use in conjunction with the resupply of the International Space Station (ISS). Each CTC measures about 4 feet by 3 feet by 3 feet, weighs about 680 pounds and is capable of carrying about 400 pounds of hardware to the ISS. The CTCs can be opened and their contents retrieved either through robotic methods or by astronauts performing extravehicular operations.

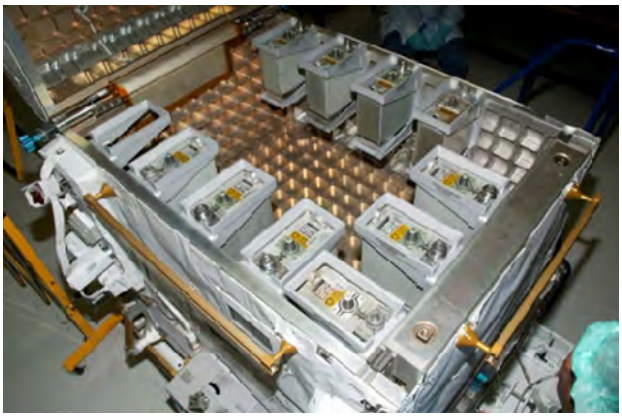

High-Pressure Gas Tank (HPGT)

High pressure oxygen onboard the ISS provides support for EVA and contingency metabolic support for the crew. This high pressure O2 is brought to the ISS by the High-Pressure Gas Tanks (HPGT) and is replenished by the Space Shuttle by using the Oxygen Recharge Compressor Assembly (ORCA). There are several drivers that must be considered in managing the available high pressure oxygen on the ISS. The amount of oxygen the space shuttle can fly up is driven by manifest mass limitations, launch slips; and on orbit shuttle power requirements. The amount of oxygen that is used from the ISS HPGTs is driven by the number of shuttle docked and undocked EVAs, the type of EVA prebreathe protocol that is used, contingency use of oxygen for metabolic support, and emergency oxygen. The HPGT will be transferred from ELC2 to the ISS Airlock. The HPGT measures 5 feet by 6.2 feet by 4.5 feet and weights approximately 1,240 pounds of which 220 pounds is gaseous oxygen at 2,450 pounds per square inch of pressure. The HPGT was provided by Boeing.

High-Pressure Gas Tank (HPGT) with the cover removed.

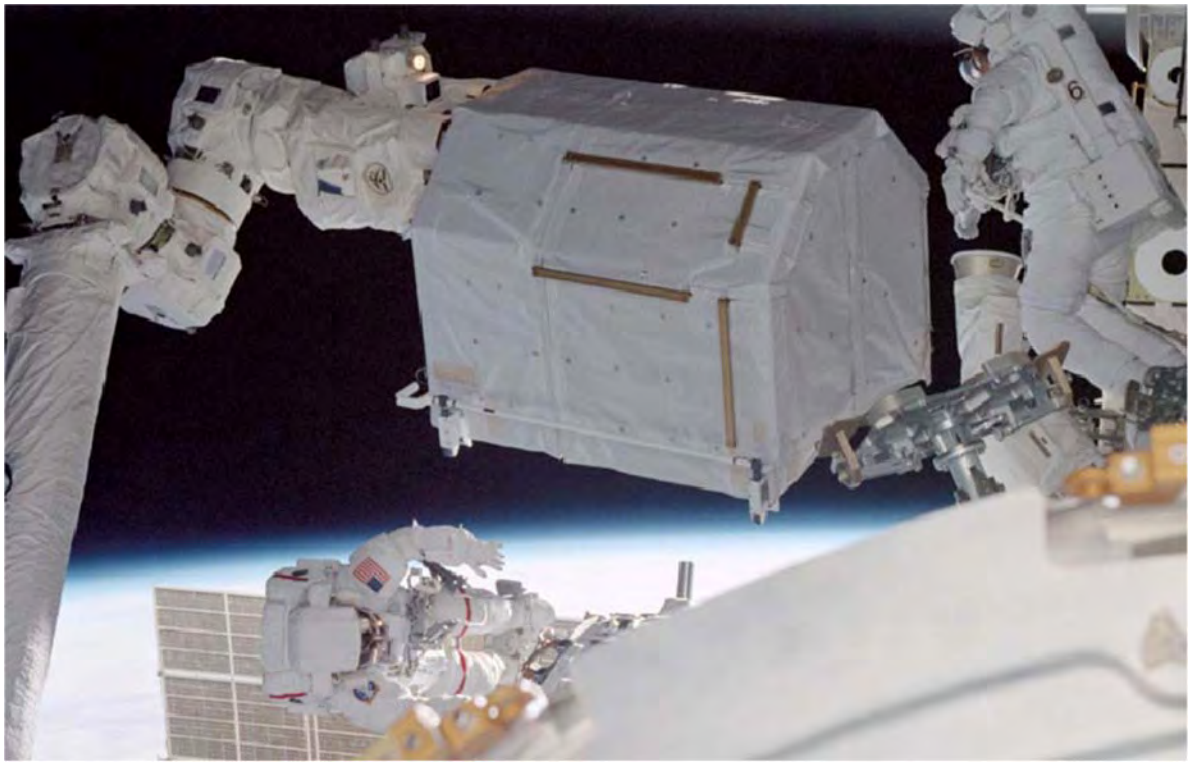

During the STS-104 mission in July 2001, astronauts are shown preparing to install the High-Pressure Gas Tank into the airlock.

Materials International Space Station Experiment 7 (MISSE-7)

The Materials on International Space Station Experiment 7 (MISSE-7) is a test bed for advanced materials and electronics attached to the outside of the International Space Station (ISS). Results will provide a better understanding of the durability of advanced materials and electronics when they are exposed to vacuum, solar radiation, atomic oxygen, and extremes of heat and cold. These materials and electronics, including solar cells, coatings, thermal protection, optics, sensors, and computing elements, have the potential to increase the performance and useful life of the next generation of satellites and launch systems.

MISSE-7 in a deployed configuration (shown during environmental testing).

The samples are installed in experiment trays within two Passive Experiment Containers (PECs), which are opened on-orbit. Astronauts will install the PECs, 7A and 7B, to the MISSE-7 support base during an EVA. Each PEC holds samples on both sides, with PEC 7A orientated zenith/nadir (space facing/Earth facing), and PEC 7B oriented ram/wake (forward/backward) relative to the ISS orbit. MISSE-7 also includes electronic experiments in boxes mounted directly to the MISSE-7 support base.

PEC 7A installed on Orbiter Sidewall.

MISSE-7 Support Base installed on ELC2.

The MISSE program has a rich history of testing advanced materials on ISS. MISSE-1 and 2 were delivered to ISS on STS-105 in August 2001 and returned on STS-114 in August 2005. MISSE-5 was deployed on STS-114 in July 2005 and returned on STS-115 in September 2006. MISSE-3 and 4 were delivered to ISS on STS-121 in July 2006 and returned on STS-118 in August 2007. MISSE-6A and 6B were delivered to the ISS on STS-123 in March 2008 and returned on STS-128 in September 2009. MISSE-7 is the latest and most advanced of the MISSE payloads, and will be the first to receive power directly from the ISS and use the ISS communication system to send commands and downlink real-time data.

Trailing Umbilical System—Reel Assembly (TUS-RA)

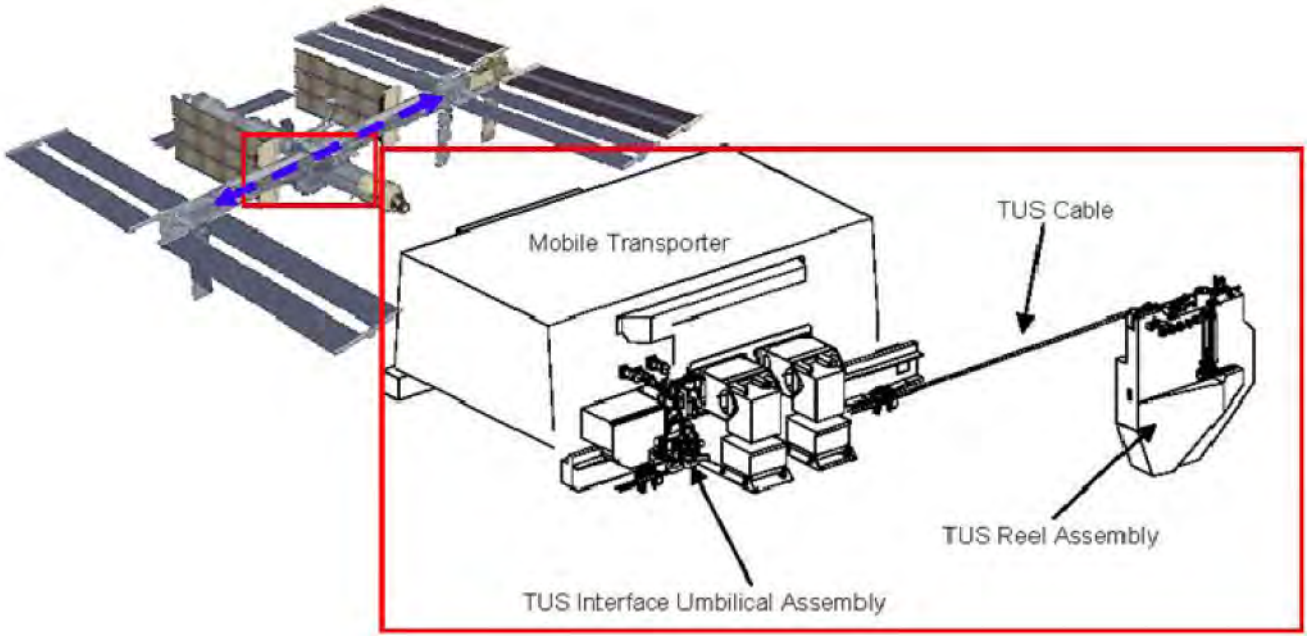

The Mobile Transporter (MT) is a cart-like assembly that moves up and down rails along the ISS integrated truss. It provides mobility and the structural load path for the Canadian Mobile Base System (MBS) and the Canadian robotic arm (Space Station Robotic Manipulator System). The power and data to operate the MT and the video and data provided to (and from) the MBS/SSRMS, routes through a set of redundant cables that are part of the Trailing Umbilical System (TUS). The TUS Reel Assembly (TUS-RA) is basically a large spool much like a garden hose reel that pays out cable when the MT moves away and rolls it back up as the MT returns to the center of the truss. The TUS system was equipped with blade cutter devices (one for each cable) that can remotely sever the cable. However, due to anomalous behavior with this feature of the TUS system, this capability was removed on Flight ULF1.1 (STS-121).

The MT is used for assembly of large elements of the station. It must be latched down at various work sites before the robotic arm can operate. When the MT is latched down after translating, power is provided through the Umbilical Mechanism Assembly (UMA) system hardware to the SSRMS and several components on top of the MBS. At the worksites, the MT/MBS/SSRMS is much more structurally secure and the active half of the UMA on the MT mates with the passive half at the work site. NASA flight rules require both TUS cables to be intact before translating anything attached to the MT.

The trailing umbilical system reel assembly is shown in the space station processing facility at KSC.

The MBS is a base platform for the robotic arm. The platform rests atop the MT, which allows it to glide down rails on the station's trusses. When Canadarm2 is attached to the MBS, it has the ability to travel to work sites along the truss structure. The top speed of the Mobile Transporter is about 2.5 cm per second. The proper and complete name of the MBS is the "MRS Base System," where MRS stands for "Mobile Remote Servicer," It is made out of aluminum and is expected to last at least 15 years. Like Canadarm2, it was built by MacDonald Dettwiler and Associates Ltd. (MDA).

The UMA (Active and Passive halves) and TUS subsystems (TUS RA, cable guide mechanisms and MT interface assemblies) was originally developed and built by the Huntington Beach (HB) division of Boeing (formerly McDonnell Douglas). Boeing HB also integrated the MT with TUS and UMA subsystems. Additionally, the MT and TUS Cables were subcontracted by Boeing HB to ASTRO, a subsidiary of Northrop Grumman and WL Gore Industries respectively.

The TUS-RA weighs approximately 334 pounds and measures about 60 inches by 62 inches by 28 inches.

This page intentionally blank.

RENDEZVOUS & DOCKING

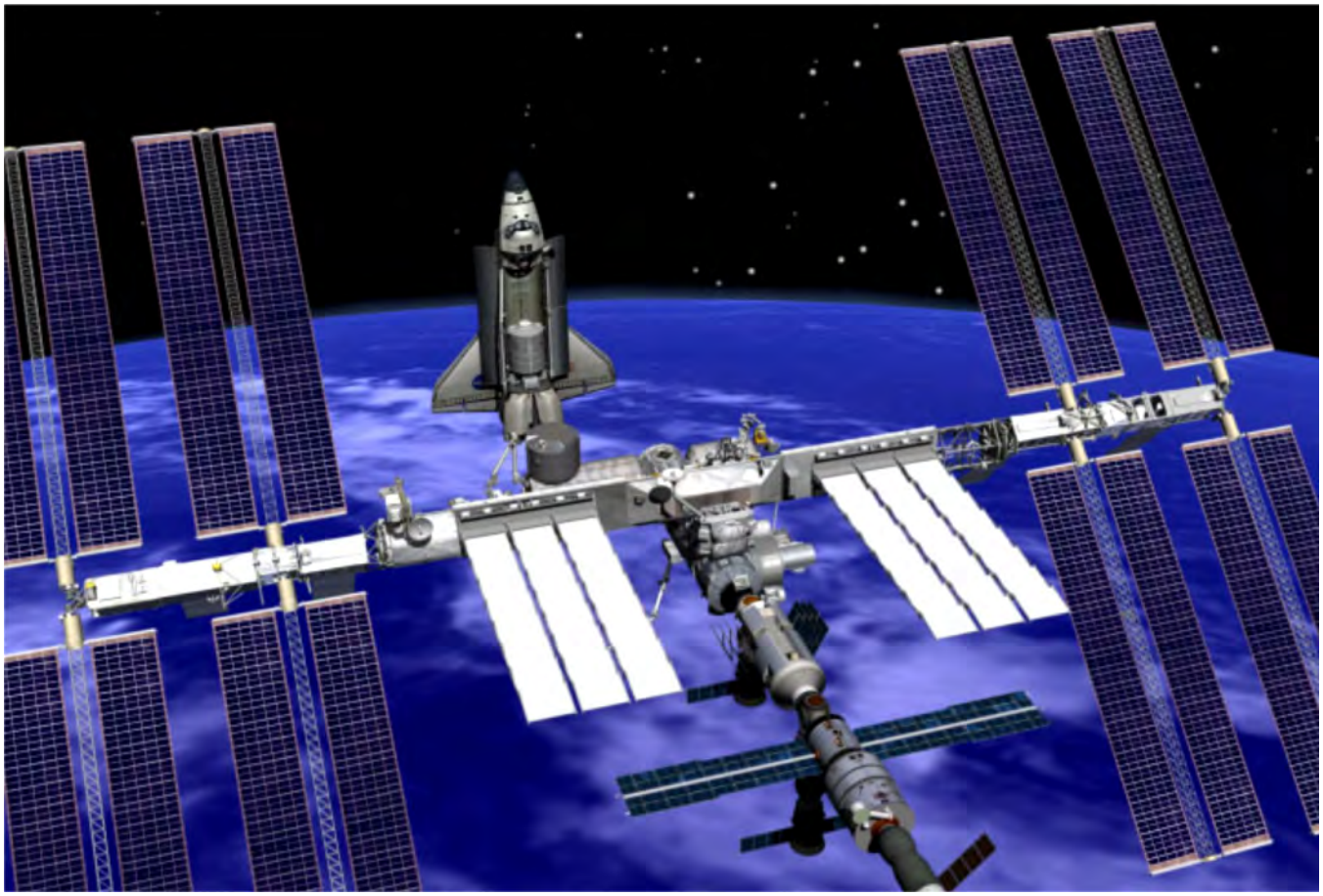

The above image depicts space shuttle Atlantis on final docking approach with the International Space Station.

When Atlantis launches on the STS-129 mission, it will fly on a trajectory to chase the International Space Station. A series of engine firings during the first two days of the mission will bring the shuttle to a point about 50,000 feet behind the station. Once there, Atlantis will start its final approach. About 2.5 hours before docking, the shuttle's jets will be fired during what is called the terminal initiation burn. The shuttle will cover the final miles to the station during the next orbit.

As Atlantis moves closer to the station, its rendezvous radar system and trajectory control sensor will provide the crew with range and closing-rate data. Several small correction burns will place the shuttle about 1,000 feet below the station.

Commander Charles O. Hobaugh, with help from Pilot Barry E. Wilmore and other crew members, will manually fly the shuttle for the remainder of the approach and docking.

Hobaugh will stop Atlantis about 600 feet below the station. Once he determines there is proper lighting, he will maneuver the shuttle through a nine-minute back flip called the Rendezvous Pitch Maneuver. During this maneuver, station crew members Jeff Williams and Nicole Stott will use digital cameras with 400mm and 800mm lenses to photograph Atlantis's upper and bottom surfaces through windows of the Zvezda Service Module. The 400mm lens provides up to three-inch resolution and the 800mm lens up to one-inch resolution. De Winne will use the 400mm and Williams will use the 800.

The photography is one of several techniques used to inspect the shuttle's thermal protection system for possible damage. Areas of special interest include the thermal protection tiles, the reinforced carbon-carbon of the nose and leading edges of the wings, landing gear doors, and the elevon cove. The photos will be downlinked through the station's Ku-band communications system for analysis by systems engineers and mission managers.

When Atlantis completes its back flip, it will be back where it started, with its payload bay facing the station. Hobaugh then will fly the shuttle through a quarter circle to a position about 400 feet directly in front of the station. From that point he will begin the final approach to docking to the Pressurized Mating Adapter 2 at the forward end of the Harmony node.

The shuttle crew members will operate laptop computers that process the navigational data, the laser range systems, and Atlantis's docking mechanism.

Using a video camera mounted in the center of the Orbiter Docking System, Hobaugh will line up the docking ports of the two spacecraft. If necessary, he will pause the shuttle 30 feet from the station to ensure proper alignment of the docking mechanisms. He will maintain the shuttle's speed relative to the station at about one-tenth of a foot per second, while both Atlantis and the station are moving at about 17,500 mph. Hobaugh will keep the docking mechanisms aligned to a tolerance of three inches.

When Atlantis makes contact with the station, preliminary latches will automatically attach the two spacecraft. The shuttle's steering jets will be deactivated to reduce the forces acting at the docking interface. Shock absorber springs in the docking mechanism will dampen any relative motion between the shuttle and station.

Once motion between the shuttle and the station has been stopped, the docking ring will be retracted to close a final set of latches between the two vehicles.

UNDOCKING, SEPARATION, AND DEPARTURE

At undocking time, the hooks and latches will be opened and springs will push the shuttle away from the station. Atlantis's steering jets will be shut off to avoid any inadvertent firings during the initial separation.

Once the shuttle is about two feet from the station and the docking devices are clear of one another, Wilmore will turn the steering jets back on and will manually control Atlantis within a tight corridor as the shuttle separates from the station.

Atlantis will move to a distance of about 450 feet, where Wilmore will begin to fly around the station. Wilmore will circle the

shuttle around the station at a distance of 600 - 700 feet. This will only be done if propellant margins and mission timeline activities permit.

Once the shuttle completes 1.5 revolutions of the complex, Wilmore will fire Atlantis's jets to leave the area. The shuttle will begin to increase its distance from the station with each trip around the earth while ground teams analyze data from the late inspection of the shuttle's heat shield. However, the distance will be close enough to allow the shuttle to return to the station in the unlikely event that the heat shield is damaged, preventing the shuttle's safe re-entry.

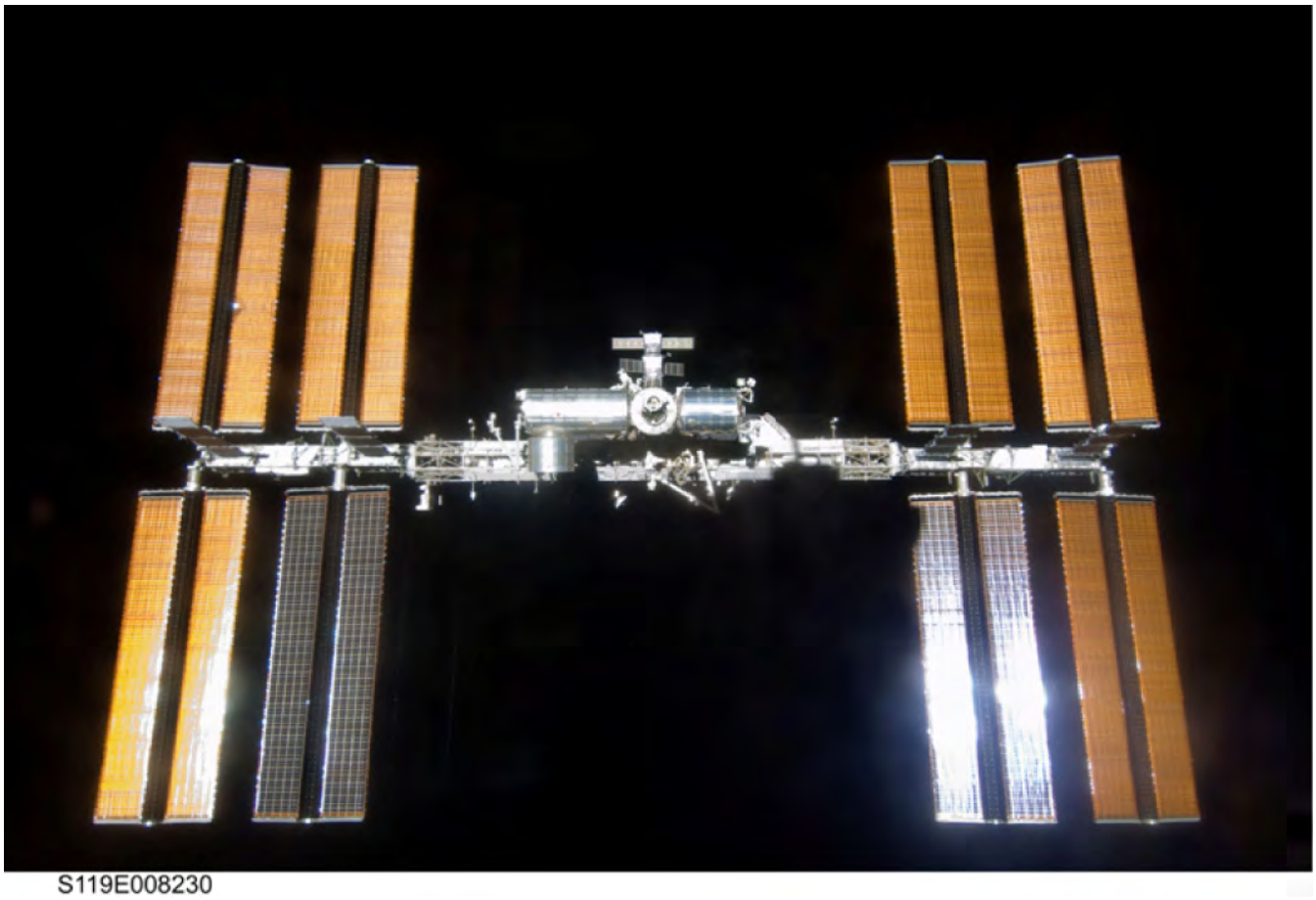

Backdropped by the blackness of space, the International Space Station is seen from space shuttle Atlantis as the two spacecraft begin their relative separation.

This page intentionally blank

SPACEWALKS

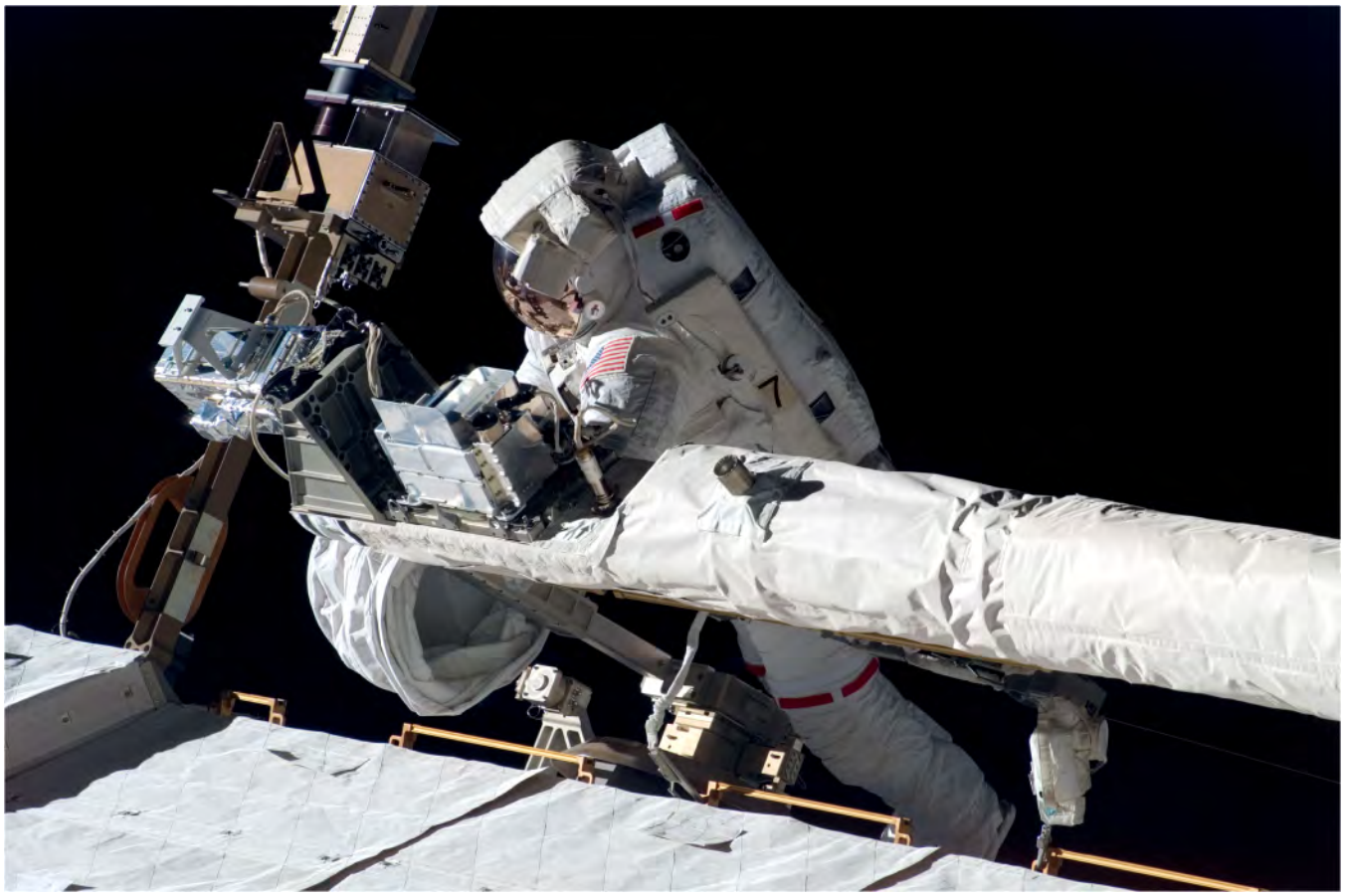

Astronaut Mike Foreman, STS-123 mission specialist, helps to tie down the Orbiter Boom Sensor System on the International Space Station's S1 truss during EVA 5 on March 22, 2008. The structure at the end of the boom is a transmission device for laser imagery from the laser devices used for scanning the thermal protection system.

There are three spacewalks scheduled for the STS-129 mission.

Mission Specialists Mike Foreman, Robert L. Satcher Jr., and Randy Bresnik will spend a combined total of 19.5 hours outside the station on flight days 4, 6, and 8. Foreman, the lead spacewalker for the mission, will suit up for the first and second spacewalks in a spacesuit marked with solid red stripes. He is a veteran spacewalker with three extravehicular activities, or EVAs, performed during the STS-123 mission in 2008.

Both Satcher and Bresnik will be performing their first spacewalks. Satcher will participating in the first and third spacewalks, wearing an all-white spacesuit. Bresnik will go outside the station for the second and third and wear a spacesuit with broken red stripes.

On each EVA day, the spacewalker left inside the station will act as the intravehicular officer, or spacewalk choreographer. The first and third spacewalks will also require astronauts inside the station to be at the controls of the station's 58-foot-long robotic arm to carry and maneuver equipment and spacewalkers.

Preparations will start the night before each spacewalk, when the astronauts spend time in the station's Quest Airlock. This practice is called the campout prebreathe protocol and is used to purge nitrogen from the spacewalkers' systems and prevent decompression sickness, also known as "the bends."

During the campout, the two astronauts performing the spacewalk will isolate themselves inside the airlock while the air pressure is lowered to 10.2 pounds per square inch, or psi. The station is kept at the near-sea-level pressure of 14.7 psi. The morning of the spacewalk, the astronauts will wear oxygen masks while the airlock's pressure is raised back to 14.7 psi for an hour and the hatch between the airlock and the rest of the station is opened. That allows the spacewalkers to perform their morning routines before returning to the airlock, where the air pressure is lowered again. Approximately 50 minutes after the spacewalkers don their spacesuits, the prebreathe protocol will be complete.

The procedure enables spacewalks to begin earlier in the crew's day than was possible before the protocol was adopted.

EVA-1

Duration: 6 hours, 30 minutes
EVA Crew: Foreman and Satcher
IV CREW: Bresnik
Robotic Arm Operators: Charles O. Hobaugh, Leland Melvin, and Barry E. Wilmore

EVA Operations:

- Install spare S-band antenna structural assembly
- Install redundant space-to-ground antenna cabling
- Remove Unity node handrail and replace with ammonia line routing bracket
- Lubricate Payload Orbital Replacement Unit Accommodation and Japanese robotic arm
- Reposition local area network cable on Zarya
- Troubleshoot S0 panel

Most of the spare parts brought up by space shuttle Atlantis will be installed onto the space station's truss robotically, but a few will need spacewalker intervention. The first of those to be installed on the station will be the spare S-band antenna structural assembly. Foreman and Satcher will begin the first spacewalk of the mission by moving it from the space shuttle's

cargo bay to the Z1 segment of the station's truss system.

For the transfer, Satcher will be doing the heavy lifting, with the help of the station's robotic arm. He'll climb onto the robotic arm from the S1 segment of the station's truss, then have Hobaugh "drive" him to the shuttle's cargo bay. There Foreman will be working to remove the assembly from its launch position by releasing four launch restraints, loosening two bolts and removing two caps from the antenna's connections. He'll then help Satcher lift it out of the cargo bay to begin the journey to the station's truss.

Before meeting Satcher at the Z1 truss, Foreman will retrieve a bundle of cables for another of the station's antennas and two ingress aids from a toolbox in the cargo bay. He'll install one of the ingress aids on a workstation interface at the airlock and stow the other inside the starboard crew and equipment translation aid – or CETA – cart. Then he will continue the installation of the antenna assembly by connecting its two cables to the Z1 truss segment and driving two bolts.

The two spacewalkers will split up for the rest of the spacewalk. Foreman will install a set of cables for the station's future space-to-ground antenna and secure its path along the Destiny laboratory with wire ties. He'll also remove a handrail on the Unity node and replace it with a bracket that will be used to route an ammonia cable required for the coming Tranquility Node. Removing the handrail will require Foreman to unscrew two bolts, and he'll drive two bolts to secure the new bracket.

Foreman's final tasks on the spacewalk will be repositioning a cable connector on the Unity node by wire-tying it into place and, at the same location, removing adjustable equipment tethers from an micrometeoroid orbital debris shield and securing it with wire ties. He also will be troubleshooting the connection of a cable on an S0 panel. The previous flight, STS-128, had difficulty connecting this cable, which is needed for the activation of the Tranquility Node. Foreman will troubleshoot the connector and use an adaptor to mate the cable to the backside of the S0 panel.

Meanwhile, Satcher will work with two of the station's robotics tools. He'll start at the mobile base system that allows the robotic arm to move along the truss system. The base, which is similar to a railroad cart for the robotic arm, includes a tool used to attach equipment and spares to the base that is similar to the robotic arm's latching end effector. Like the latching end effector, the wires that allow the tool to grip the equipment and spares needs to be lubricated. Satcher will use a modified grease gun to add lubrication to those wires and the bearings they're attached to. He'll then do the same to the latching end effector of the Japanese robotic arm. The end effectors of the shuttle's larger robotic arm, which Satcher will be riding, were lubricated in spacewalks earlier this year.

EVA-2

Duration: 6 hours, 30 minutes
EVA Crew: Foreman and Bresnik
IV Crew: Satcher
Robotic Arm Operator: None

EVA Operations

- Install Grappling Adaptor To On-Orbit Railing (GATOR) assembly
- Relocate floating potential measurement unit
- Set up S3 nadir/outboard cargo attachment system
- Install wireless video system external transceiver assembly

Foreman and Bresnik will spend the entire second spacewalk working together. They'll start by installing a GATOR assembly on the Columbus module. GATOR is part of a project to demonstrate two different types of Automatic Identification System receivers, which is an existing system that's currently used by ships and United States Coast Guard's Vessel Traffic Services to exchange data such as identification of the ships, their purpose, course

and speed. The assembly also includes an antenna used for HAM radio.

The GATOR assembly includes two antennas, a cable harness and two clamps. To install it, Foreman and Bresnik will retrieve the assembly from a tool box in the shuttle's cargo bay and carry it to Columbus. Foreman will connect the assembly to its power source and wire tie its cables into place, while Bresnik extends the antennas and then installs them on the appropriate handrails. The antennas will be secured with two bolts apiece.

The next tasks on the spacewalkers' agenda will be the relocation of the station's floating potential measurement unit, a tool that measures the affect the station's solar arrays have on arcing hazards and verifies that the controls that prevent arcing hazards are working. The hardware is being moved from the innermost starboard truss segment to the innermost port segment. Three connections will have to be disconnected from the S1 truss segment and reconnected to the P1, and one bolt will hold the hardware in place.

Foreman and Bresnik will then move to the S3 segment of the truss, where they'll be setting up the first of two cargo attachment systems the spacewalkers are scheduled to work on during the mission.

This task was originally scheduled to be completed on previous missions, but for various reasons was delayed. The STS-127 spacewalkers completed the deployment of a similar cargo attachment system on the P3 truss segment, but had to leave the set up two S3 systems for this mission. And on STS-119 a jammed detent pin on the first of the systems prevented them from doing deploying the P3 system. A special tool was built to assist with the deployment. The STS-127 spacewalkers were successful in clearing the jam. Foreman and Bresnik will have the same tool on hand for use, if needed; however, the STS-128 spacewalkers were able to deploy a similar cargo attachment system without any issues.

The system, which will allow future missions to store spare parts, like those that Atlantis delivered to the station during this mission, on the station's truss segment for future use. To set it up, the spacewalkers will first remove two truss braces blocking access to the system. That will allow them to swing the system out, replace the braces, and attach the system to the outside of the truss.

In the final task of the spacewalk, Foreman and Bresnik will be installing a wireless video system external transceiver assembly, or WETA, on the same segment. WETAs support the transmission of video from spacewalkers' helmet cameras. To do so, Foreman will remove a dummy box currently in the location, and then attach the WETA to a stanchion. Bresnik will connect three cables to the assembly.

EVA-3

Duration: 6 hours, 30 minutes
EVA Crew: Satcher and Bresnik
IV Crew: Foreman
Robotic Arm Operator: Melvin and Wilmore

EVA Operations

- Transfer high pressure gas tank
- Install Materials International Space Station Experiment 7
- Set up S3 zenith/inboard cargo attachment system

The final spacewalk of the STS-129 mission will start with a task that will make future spacewalks possible.

Satcher will begin by moving the high pressure gas tank delivered by space shuttle Atlantis, from the external logistics carrier that it arrived on to the Quest airlock, where it will someday be used to pressurize and depressurize the airlock for spacewalks and to supplement the space station's atmosphere if needed. He'll prepare the airlock for its arrival by closing a valve on one of its current high pressure gas tanks, and then move to the logistics carrier on the S3 segment of the truss to pick up the new

tank. He'll unlock the two handles holding it in place to remove it and, with the help of Bresnik, hand it off to the station's robotic arm to carry it to the airlock.

While it's on the move, Satcher will make his way back to the airlock to remove two micrometeoroid orbital debris shields and store them out of the way. When the tank arrives at the airlock, both Satcher and Bresnik will climb into foot restraints to be able to take the tank back from the robotic arm. Then the two will move it into place, and Bresnik will rotate the handles into their locked position. While Satcher puts away his foot restraint, Bresnik will finish installing the tank by removing some insulation and connect its gas line to the airlock. He'll open the tank's valve to check its connection but close it again before he leaves the site in order to perform a leak check of the tank.

When Bresnik is not doing his part with the high pressure gas tank relocation, he'll be installing the seventh Materials International Space Station Experiment, or MISSE 7. He'll retrieve it from the shuttle's cargo bay at the beginning of the spacewalk and carry it with him to the express logistics carrier, so that he can assist with the retrieval of the high pressure gas tank. Then, while Satcher and the tank are making their way to the airlock, Bresnik will stay behind and install the experiment on the logistics carrier by connecting two cables. He'll also deploy the experiment by opening the two canisters its contained in.

The final task of the STS-129 spacewalks will be to deploy another cargo attachment system on the S3 truss segment, this time on the zenith, inboard side of the segment. The steps involved will be very similar to those of the cargo attachment system set up on the second spacewalk.

EXPERIMENTS

The space shuttle and International Space Station have an integrated research program that optimizes the use of shuttle crew members and long-duration space station crew members to address research questions in a variety of disciplines.

For information on science on the station, visit:

http://www.nasa.gov/mission_pages/station/science/index.html

or

http://iss-science.jsc.nasa.gov/index.cfm

Detailed information is located at:

http://www.nasa.gov/mission_pages/station/science/experiments/Expedition.html

DETAILED TEST OBJECTIVES AND DETAILED SUPPLEMENTARY OBJECTIVES

Detailed Test Objectives (DTOs) are aimed at testing, evaluating or documenting systems or hardware or proposed improvements to hardware, systems and operations. Many of the DTOs on this mission are to provide additional information for engineers working for the Constellation Program as they develop requirements for the rocket and crew module that will return humans to the moon.

DTO 696 Grab Sample Container (GSC) Redesign for Shuttle

Successfully sustaining life in space requires closely monitoring the environment to ensure the health and performance of the crew. Astronauts can be more sensitive to air pollutants because of the closed environment, and the health effects of pollutants are magnified in space exploration because the astronauts' exposure is continuous. One hazard is the off-gassing of vapors from plastics and other inorganic materials aboard the vehicle.

To monitor air contaminant levels, crew members use devices called grab sample containers. The containers to be flown on this mission have been redesigned so they minimize overall size and volume. Three of the new GSCs will fit into the packing volume previously needed for one GSC. The smaller GSCs will also be used on the space station and evaluated during this mission.

DTO 900 Solid Rocket Booster Thrust Oscillation

This is the last planned flight the Space Shuttle Program is gathering data to gain a greater understanding of the pressure oscillation, or periodic variation, phenomena that regularly occurs within solid rocket motors. The pressure oscillation that is observed in solid rocket motors is similar to the hum made when blowing into a bottle. At 1.5 psi, or pounds per square inch, a pressure wave will move up and down the motor from the front to the rear, generating acoustic noise as well as physical loads in the structure.

These data are necessary to help propulsion engineers confirm modeling techniques of pressure oscillations and the loads they create. As NASA engineers develop alternate propulsion designs for use in NASA, they will take advantage of current designs from which

they can learn and measure. In an effort to obtain data to correlate pressure oscillation with the loads it can generate, the shuttle program is using two data systems to gather detailed information. Both systems are located on the top of the solid rocket motors inside the forward skirt.

To date, the IPT and EDAS have operated successfully and provided data that will be used by propulsion system designers and engineers.

The Intelligent Pressure Transducer, or IPT, is a standalone pressure transducer with an internal data acquisition system that will record pressure data to an internal memory chip. The data will be downloaded to a computer after the booster has been recovered and returned to the Solid Rocket Booster Assembly and Refurbishment Facility at NASA's Kennedy Space Center, Fla. This system has been used on numerous full scale static test motors in Utah and will provide engineers with a common base to compare flight data to ground test data.

The Enhanced Data Acquisition System, or EDAS, is a data acquisition system that will record pressure data from one of the Reusable Solid Rocket Booster Operational Pressure Transducers, or OPT, and from accelerometers and strain gages placed on the forward skirt walls. These data will provide engineers with time synchronized data that will allow them to determine the accelerations and loads that are transferred through the structure due to the pressure oscillation forces.

Intelligent Pressure Transducer

Detailed Supplementary Objectives (DSOs) are space and life science investigations. Their purpose is to determine the extent of physiological deconditioning resulting from spaceflight, to test countermeasures to those changes and to characterize the space environment relative to crew health.

DSO 640 Physiological Factors

Astronauts experience alterations in multiple physiological systems due to exposure to the microgravity conditions of spaceflight. These physiological changes include sensorimotor disturbances, cardiovascular deconditioning, and loss of muscle mass and strength. These changes may lead to a disruption in the ability to walk and perform functional tasks during the initial reintroduction to gravity following prolonged spaceflight and may cause significant impairments in performance of operational tasks immediately following landing.

The objective of this study is to identify the key underlying physiological factors that contribute to changes in performance of a set of functional tasks that are representative of critical mission tasks for lunar and Mars operations. Astronauts will be tested on an integrated suite of functional and interdisciplinary physiological tests before and after short and long-duration spaceflight. Using this strategy, the investigators will be able to:

1. Identify critical mission tasks that may be impacted by alterations in physiological responses
2. Map physiological changes to alterations in functional performance
3. Design and implement countermeasures that specifically target the physiological systems responsible for impaired functional performance.

For additional information, follow these link:

https://rlsda.jsc.nasa.gov/scripts/experiment/exper.cfm?exp_index=1448

https://rlsda.jsc.nasa.gov/docs/research/research_detail.cfm?experiment_type_code=35&researchtype=

EXPERIMENTS

The STS-129/ULF-3 mission continues the transition from a focus on International Space Station assembly of continuous scientific research in the fall of 2010.

Nearly 150 operating experiments in human research; biological and physical sciences; technology development; Earth observation, and educational activities will be conducted aboard the station, including several pathfinder investigations under the auspices of the station's new role as a U.S. National Laboratory.

In the past, assembly and maintenance activities have dominated the available time for crew work. But as completion of the orbiting laboratory nears, additional facilities and the crewmembers to operate them will enable a measured increase in time devoted to research as a national and multi-national laboratory.

Among the new NLP investigations are the latest experiments in the NLP-Vaccine series, which will follow up on recent discoveries about how the infectious nature of some germs can be controlled. The NLP Vaccine research is aimed at developing vaccines against microbial pathogens, with results already obtained targeting Salmonella bacteria that cause diarrhea.

Also, two major additions to the research facilities aboard the station – the Materials Science Research Rack-1 and the Fluids Integrated Rack – were delivered by Discovery's crew on the recent STS-128 shuttle mission. Those facilities have been installed and checked out inside the station and will be used by the Expedition 21 and 22 crews to expand the station's research potential.

Outside the station, the new Materials International Space Station Experiment, MISSE 7, will be installed by the STS-129 crew of Atlantis in December. MISSE 7 will test space suit materials for use on the lunar surface and materials for the new solar arrays being designed for NASA's Orion spacecraft, evaluating how well they withstand the effects of atomic oxygen, ultraviolet, direct sunlight, radiation, and extremes of heat and cold.

Short-Duration Research To Be Completed During STS-129/ULF-3

Human Research and Countermeasure Development for Exploration

Validation of Procedures for Monitoring Crew Member Immune Function – Short Duration Biological Investigation (Integrated Immune-SDBI) assesses the clinical risks resulting from the adverse effects of space flight on the human immune system and will validate a flight-compatible immune monitoring strategy. Immune system changes will be monitored by collecting and analyzing blood, urine and saliva samples from crewmembers before, during and after space flight. (NASA)

National Lab Pathfinder-Cells-2 (NLP-Cells-2) experiment assesses the effects of space flight on the virulence and gene expression of specific virulence factors of *S. pneumonia.* (NASA)

National Lab Pathfinder – Vaccine – 6 (NLP-Vaccine-6) is part of a suite of investigations serving as a pathfinder for the use of the International Space Station as a National Laboratory after ISS assembly is complete. It contains several different pathogenic (disease causing) organisms. This research is investigating the use of space flight to develop potential vaccines for the

prevention of different infections caused by these pathogens on Earth and in microgravity. (NASA)

Sleep-Wake Actigraphy and Light Exposure during Spaceflight – Short (Sleep-Short) examines the effects of spaceflight on the sleep-wake cycles of the astronauts during shuttle missions. Advancing state-of-the-art technology for monitoring, diagnosing and assessing treatment of sleep patterns is vital to treating insomnia on Earth and in space. (NASA)

Spinal Elongation and its Effects on Seated Height in a Microgravity Environment (Spinal Elongation) study provides quantitative data as to the amount of change that occurs in the seated height due to spinal elongation in microgravity. (NASA)

Technology Development

Maui Analysis of Upper Atmospheric Injections (MAUI) observes the Space Shuttle engine exhaust plumes from the Maui Space Surveillance Site in Hawaii. As the Shuttle flies over the Maui site, a telescope and all-sky imagers capture images and data when the Shuttle engines fire at night or twilight. The data collected is analyzed in order to determine the interaction between the spacecraft exhaust plume and the upper atmosphere. (NASA)

Ram Burn Observations – 2 (RAMBO-2) is an experiment in which the Department of Defense uses a satellite to observe space shuttle orbital maneuvering system engine burns. Its purpose is to improve plume models, which predict the direction the plume, or rising column of exhaust, will move as the shuttle maneuvers on orbit. Understanding the direction in which the spacecraft engine plume, or exhaust flows could be significant to the safe arrival and departure of spacecraft on current and future exploration missions. (NASA)

Shuttle Exhaust Ion Turbulence Experiments (SEITE) uses space-based sensors to detect the ionospheric turbulence inferred from the radar observation from a previous Space Shuttle Orbital Maneuvering System (OMS) burn experiment using ground-based radar. (NASA)

The Shuttle Ionoshperic Modification with Pulsed Localized Exhaust Experiments (SIMPLEX) investigates plasma turbulence driven by rocket exhaust in the ionosphere using ground-based radars. (NASA)

New Experiments and Facilities Delivered by STS-129/ULF-3

EXPERIMENTS

Human Research and Countermeasure Development for Exploration

Biomedical analyses of human hair exposed a long-term space flight (Hair) will study the effects of long-term exposure to the space environment on gene expression and mineral metabolism in human hair. Human hair is one of the most suitable biological specimens for a space experiment since there are no special requirements for handling or for use of hardware. Hair matrix cells actively divide in a hair follicle while these cell divisions sensitively reflect physical conditions. The hair shaft records the information of the astronauts' metabolic conditions. These samples give us useful physiological information to examine the effects of spaceflight on astronauts participating in long-duration spaceflight missions. In the

experiment, two different analyses will be performed using the ISS crew members' hair:

1. Nucleic Acids (RNA and mitochondrial DNA) and proteins in the hair root.

2. Minerals in the hair shaft. (JAXA)

Health Consequences of Long-Duration Flight (Vascular) is an integrated approach to gain knowledge concerning the mechanisms responsible for changes that will occur in vascular structure with long-duration space flight and to link this with their functional and health consequences. (CSA)

Physical and Biological Sciences in Microgravity

RNA interference and protein phosphorylation in space environment using the nematode Caenorhabditis elegans (CERISE) is an experiment that addresses two scientific objectives. The first is to evaluate the effect of microgravity on ribonucleic acid (RNA) interference. The second is to study how the space environment effects protein phosphorylation (addition of a phosphate molecule) and signal transduction in the muscle fibers of gene knock-downed *Caenorhabditis elegans*.

Cambium is one in a pair of investigations which utilizes the Advanced Biological Research System (ABRS). Cambium seeks definitive evidence that gravity has a direct effect on cambial cells (cells located under the inner bark where secondary growth occurs) in willow, *Salix babylonica*. (CSA)

Transgenic *Arabidopsis* Gene Expression System (TAGES) is one in a pair of investigations that use the Advanced Biological Research System facility (ABRS). TAGES uses *Arabidopsis thaliana*, thale cress, with sensor promoter-reporter gene constructs that render the plants as biomonitors (an organism used to determine the quality of the surrounding environment) of their environment using real-time nondestructive Green Fluorescent Protein imagery and traditional postflight analyses. (NASA)

Observing the Earth and Educational Activities

Commercial Generic Bioprocessing Apparatus Science Insert – 03 (CSI-03) is the third set of investigations in the CSI program series. The CSI program provides the K-12 community opportunities to utilize the unique microgravity environment of the International Space Station as part of the regular classroom to encourage learning and interest in science, technology, engineering and math. CSI-03 will examine the complete life cycle of the Painted Lady and Monarch butterflies. (NASA)

Technology Development for Exploration

Automatic Identification System/Grappling Adaptor to On-Orbit Railing (**AIS/GATOR**) aims to demonstrate the space-based capability of identification of maritime vessels using the Automatic Identification System (AIS). The Grappling Adaptor to On-Orbit Railing (GATOR) demonstrates the on-orbit capability of simple hardware designed to attach small passive equipment/payloads externally to the ISS Extravehicular handrails. (ESA)

Materials International Space Station Experiment – 7 (MISSE-7) is a test bed for materials and coatings attached to the outside of the International Space Station (ISS) being evaluated for the effects of atomic oxygen,

ultraviolet, direct sunlight, radiation, and extremes of heat and cold. This experiment allows the development and testing of new materials to better withstand the rigors of space environments. Results will provide a better understanding of the durability of various materials when they are exposed to the space environment with applications in the design of future spacecraft.

FACILITIES

The **Advanced Biological Research System (ABRS)** is a single locker system with two growth chambers that is compatible with both the Space Shuttle and the ISS. Each growth chamber is a closed system capable of independently controlling temperature, illumination, and atmospheric composition to grow a variety of biological organisms.

ISS Research Samples Returned on STS-129/ULF-3

Human Research and Countermeasure Development for Exploration

Bisphosphonates as a Countermeasure to Space Flight Induced Bone Loss (Bisphosphonates) determines whether antiresorptive agents (help reduce bone loss), in conjunction with the routine inflight exercise program, will protect ISS crewmembers from the regional decreases in bone mineral density documented on previous ISS missions. (NASA)

Long Term Microgravity: A Model for Investigating Mechanisms of Heart Disease with New Portable Equipment (Card) is an experiment that studies blood pressure decreases when the human body is exposed to microgravity. In order to increase the blood pressure to the level it was on Earth, salt is added to the crewmembers' diet. To monitor this, blood pressure readings and urine samples are performed at different intervals during the mission. (ESA)

Validation of Procedures for Monitoring Crew Member Immune Function (Integrated Immune) assesses the clinical risks resulting from the adverse effects of space flight on the human immune system and will validate a flight-compatible immune monitoring strategy. Researchers collect and analyze blood, urine and saliva samples from crewmembers before, during and after space flight to monitor changes in the immune system. Changes in the immune system are monitored by collecting and analyzing blood and saliva samples from crewmembers during flight and blood, urine, and saliva samples before and after space flight. (NASA)

Nutritional Status Assessment (Nutrition) is the most comprehensive inflight study done by NASA to date of human physiologic changes during long-duration space flight; this includes measures of bone metabolism, oxidative damage, nutritional assessments, and hormonal changes. This study will impact both the definition of nutritional requirements and development of food systems for future space exploration missions to the Moon and Mars. This experiment will also help to understand the impact of countermeasures (exercise and pharmaceuticals) on nutritional status and nutrient requirements for astronauts. (NASA)

The National Aeronautics and Space Administration Biological Specimen Repository (Repository) is a storage bank that is used to maintain biological specimens over extended periods of time and under well-controlled conditions. Biological samples

from the International Space Station (ISS), including blood and urine, will be collected, processed and archived during the preflight, inflight and postflight phases of ISS missions. This investigation has been developed to archive biosamples for use as a resource for future space flight related research. (NASA)

SOdium LOading in Microgravity (SOLO) is a continuation of extensive research into the mechanisms of fluid and salt retention in the body during bed rest and spaceflights. It is a metabolically-controlled study. During long-term space missions astronauts will participate in two study phases, 5 days each. Subjects follow a diet of constant either low or normal sodium intake, fairly high fluid consumption and isocaloric nutrition. (ESA)

Comprehensive Characterization of Micro-organisms and Allergens in Spacecraft (SWAB) will use advanced molecular techniques to comprehensively evaluate microbes on board the space station, including pathogens (organisms that may cause disease). It also will track changes in the microbial community as spacecraft visit the station and new station modules are added. This study will allow an assessment of the risk of microbes to the crew and the spacecraft. (NASA)

Physical and Biological Sciences in Microgravity

Dose Distribution Inside ISS – Dosimetry for Biological Experiments in Space (DOSIS-DOBIES) consists of two investigations. The DOSIS portion of the experiment will provide documentation of the actual nature and distribution of the radiation field inside the spacecraft. Integral measurements of energy, charge and LET spectra of the heavy ion component will be done by the use of different nuclear track detectors. The objective of DOBIES is to develop a standard dosimetric method (as a combination of different techniques) to measure the absorbed doses and equivalent doses in biological samples. (ESA)

Chaos, Turbulence and its Transition Process in Marangoni Convection (Marangoni) is a surface-tension-driven flow experiment. A liquid bridge of silicone oil (5 or 10 cSt) is formed into a pair of disks. Convection is induced by imposing the temperature difference between disks. We observe the flow and temperature fields in each stage and investigate the transition conditions and processes precisely. (JAXA)

Mice Drawer System (MDS) is an Italian Space Agency investigation that uses a validated mouse model to investigate the genetic mechanisms underlying bone mass loss in microgravity. Research conducted with the MDS is an analog to the human research program, which has the objective to extend the human presence safely beyond low Earth orbit. (ASI/NASA)

Materials Science Laboratory – Columnar-to-Equiaxed Transition in Solidification Processing and Microstructure Formation in Casting of Technical Alloys under Diffusive and Magnetically Controlled Convective Conditions (MSL-CETSOL and MICAST) are two investigations that support research into metallurgical solidification, semiconductor crystal growth (Bridgman and zone melting), and measurement of thermo-physical properties of materials. This is a cooperative investigation with the European Space Agency (ESA) and National Aeronautics and Space Administration (NASA) for accommodation

and operation aboard the International Space Station (ISS). (ESA/NASA)

Integrated Assessment of Long-term Cosmic Radiation Through Biological Responses of the Silkworm, *Bombyx mori*, in Space (RadSilk) examines the effects of radiation exposure in microgravity on silkworms. (JAXA)

Validating Vegetable Production Unit (VPU) Plants, Protocols, Procedures and Requirements (P3R) Using Currently Existing Flight Resources (Lada-VPU-P3R) is a study to advance the technology required for plant growth in microgravity and to research related food safety issues. Lada-VPU-P3R also investigates the non-nutritional value to the flight crew of developing plants on-orbit. The Lada-VPU-P3R uses the Lada hardware on the ISS and falls under a cooperative agreement between National Aeronautics and Space Administration (NASA) and the Russian Federal Space Agency (FSA). (NASA/FSA)

Additional Station Research from Now Until the End of Expedition 21/22

Human Research and Countermeasure Development for Exploration

Cardiovascular and Cerebrovascular Control on Return from ISS (CCISS) will study the effects of long-duration space flight on crewmembers' heart functions and their blood vessels that supply the brain. Learning more about the cardiovascular and cerebrovascular systems could lead to specific countermeasures that might better protect future space travelers. This experiment is collaborative effort with the Canadian Space Agency. (NASA/CSA)

Sleep-Wake Actigraphy and Light Exposure During Spaceflight-Long (Sleep-Long) examines the effects of space flight and ambient light exposure on the sleep-wake cycles of the crewmembers during long-duration stays on the space station. (NASA)

Nutritional Status Assessment (Nutrition) is the most comprehensive inflight study done by NASA to date of human physiologic changes during long-duration space flight; this includes measures of bone metabolism, oxidative damage, nutritional assessments, and hormonal changes. This study will impact both the definition of nutritional requirements and development of food systems for future space exploration missions to the Moon and Mars. This experiment will also help to understand the impact of countermeasures (exercise and pharmaceuticals) on nutritional status and nutrient requirements for astronauts. (NASA)

The National Aeronautics and Space Administration Biological Specimen Repository (Repository) is a storage bank that is used to maintain biological specimens over extended periods of time and under well-controlled conditions. Biological samples from the International Space Station (ISS), including blood and urine, will be collected, processed and archived during the preflight, inflight and postflight phases of ISS missions. This investigation has been developed to archive biosamples for use as a resource for future space flight related research. (NASA)

Validation of Procedures for Monitoring Crew Member Immune Function (Integrated Immune) assesses the clinical risks resulting from the adverse effects of space flight on the human immune system and will validate a flight-compatible immune monitoring strategy.

Researchers collect and analyze blood, urine and saliva samples from crewmembers before, during and after space flight to monitor changes in the immune system. Changes in the immune system are monitored by collecting and analyzing blood and saliva samples from crewmembers during flight and blood, urine, and saliva samples before and after space flight. (NASA)

Cardiac Atrophy and Diastolic Dysfunction During and After Long Duration Spaceflight: Functional Consequences for Orthostatic Intolerance, Exercise Capability and Risk for Cardiac Arrhythmias (Integrated Cardiovascular) will quantify the extent, time course and clinical significance of cardiac atrophy (decrease in the size of the heart muscle) associated with long-duration space flight. This experiment will also identify the mechanisms of this atrophy and the functional consequences for crewmembers that will spend extended periods of time in space. (NASA)

Bisphosphonates as a Countermeasure to Space Flight Induced Bone Loss (Bisphosphonates) determines whether antiresorptive agents (help reduce bone loss), in conjunction with the routine inflight exercise program, will protect ISS crewmembers from the regional decreases in bone mineral density documented on previous ISS missions. (NASA)

The effect of long-term microgravity exposure on cardiac autonomic function by analyzing 24-hours electrocardiogram (Biological Rhythms) examines the effect of long-term microgravity exposure on cardiac autonomic function by analyzing 24-hour electrocardiogram. (JAXA)

SOdium LOading in Microgravity (SOLO) is a continuation of extensive research into the mechanisms of fluid and salt retention in the body during bed rest and spaceflights. It is a metabolically-controlled study. During long-term space missions astronauts will participate in two study phases, 5 days each. Subjects follow a diet of constant either low or normal sodium intake, fairly high fluid consumption and isocaloric nutrition. (ESA)

Observing the Earth and Educational Activities

Crew Earth Observations (CEO) takes advantage of the crew in space to observe and photograph natural and human-made changes on Earth. The photographs record the Earth's surface changes over time, along with dynamic events such as storms, floods, fires and volcanic eruptions. These images provide researchers on Earth with key data to better understand the planet. (NASA)

Earth Knowledge Acquired by Middle School Students (EarthKAM) an education activity, allows middle school students to program a digital camera on board the International Space Station to photograph a variety of geographical targets for study in the classroom. Photos are made available on the world wide web for viewing and study by participating schools around the world. Educators use the images for projects involving Earth Science, geography, physics, and social science. (NASA)

Physical and Biological Science in Microgravity

Foam-Stability examines the characteristics and stability of foam under microgravity conditions. (ESA)

Multi-User Droplet Combustion Apparatus – FLame Extinguishment Experiment (MDCA-FLEX) assesses the effectiveness of fire suppressants in microgravity and quantify the effect of different possible crew exploration atmospheres on fire suppression. The goal of this research is to provide definition and direction for large scale fire suppression tests and selection of the fire suppressant for next generation crew exploration vehicles. (NASA)

Selectable Optical Diagnostics Instrument – Influence of Vibration on Diffusion of Liquids (SODI-IVIDIL) studies the influence of controlled vibration stimulus (slow shaking) on diffusion between different liquids in absence of convection induced by the gravity field. This investigation aims help scientists to model numerically this physical phenomenon. (NASA/ESA)

Life Cycle of High Plants under Microgravity Conditions (SpaceSeed) uses *Arabidopsis thaliana* to determine if the life cycle of the plant can be achieved in microgravity. Additionally, this study will examine the specific genes in the cell wall of the plant that do not activate under microgravity conditions that normally activated in 1-g conditions. (JAXA)

Technology Development

Synchronized Position Hold, Engage, Reorient, Experimental Satellites (SPHERES) are bowling-ball sized spherical satellites. They are used inside the space station to test a set of well-defined instructions for spacecraft performing autonomous rendezvous and docking maneuvers. Three free-flying spheres fly within the cabin of the Space Station, performing flight formations. Each satellite is self-contained with power, propulsion, computers and navigation equipment. The results are important for satellite servicing, vehicle assembly and formation flying spacecraft configurations. (NASA)

Space Dynamically Responding Ultrasonic Matrix System (SpaceDRUMS) comprises a suite of hardware that enables containerless processing (samples of experimental materials can be processed without ever touching a container wall). Using a collection of 20 acoustic beam emitters, SpaceDRUMS can completely suspend a baseball-sized solid or liquid sample during combustion or heat-based synthesis. Because the samples never contact the container walls, materials can be produced in microgravity with an unparalleled quality of shape and composition. The ultimate goal of the SpaceDRUMS hardware is to assist with the development of advanced materials of a commercial quantity and quality, using the space-based experiments to guide development of manufacturing processes on Earth.

Microgravity Acceleration Measurement System (MAMS) and Space Acceleration Measurement System (SAMS-II) measure vibration and quasi-steady accelerations that result from vehicle control burns, docking and undocking activities. The two different equipment packages measure vibrations at different frequencies.

Payload Operations Coordination

The work of more than 400 scientists, this research has been prioritized based on fundamental and applied research needs established by NASA and the international partners – the Canadian Space Agency (CSA), the European Space Agency (ESA), the Japan Aerospace and Exploration Agency (JAXA) and the Russian Federal Space Agency (RSA).

Managing the international laboratory's scientific assets, as well as the time and space required to accommodate experiments and programs from a host of private, commercial, industry and government agencies nationwide, makes the job of coordinating space station research critical.

Teams of controllers and scientists on the ground continuously plan, monitor and remotely operate experiments from control centers around the globe. Controllers staff payload operations centers around the world, effectively providing for researchers and the station crew around the clock, seven days a week.

State-of-the-art computers and communications equipment deliver up-to-the-minute reports about experiment facilities and investigations between science outposts across the United States and around the world. The payload operations team also synchronizes the payload time lines among international partners, ensuring the best use of valuable resources and crew time.

The control centers of NASA and its partners are

- NASA Payload Operations Center, Marshall Space Flight Center in Huntsville, Ala.
- RSA Center for Control of Spaceflights ("TsUP" in Russian) in Korolev, Russia
- JAXA Space Station Integration and Promotion Center (SSIPC) in Tskuba, Japan
- ESA Columbus Control Center (Col-CC) in Oberpfaffenhofen, Germany
- CSA Payloads Operations Telesciences Center, St. Hubert, Quebec, Canada

NASA's Payload Operations Center serves as a hub for coordinating much of the work related to delivery of research facilities and experiments to the space station as they are rotated in and out periodically when space shuttles or other vehicles make deliveries and return completed experiments and samples to Earth.

The payload operations director leads the POC's main flight control team, known as the "cadre," and approves all science plans in coordination with Mission Control at NASA's Johnson Space Center in Houston, the international partner control centers and the station crew.

On the Internet

For fact sheets, imagery and more on International Space Station experiments and payload operations, visit:

http://www.nasa.gov/mission_pages/station/science/

SHUTTLE REFERENCE DATA

SHUTTLE ABORT MODES

Redundant Sequence Launch Sequencer (RSLS) Aborts

These occur when the on-board shuttle computers detect a problem and command a halt in the launch sequence after taking over from the ground launch sequencer and before solid rocket booster ignition.

Ascent Aborts

Selection of an ascent abort mode may become necessary if there is a failure that affects vehicle performance, such as the failure of a space shuttle main engine or an orbital maneuvering system engine. Other failures requiring early termination of a flight, such as a cabin leak, might also require the selection of an abort mode. There are two basic types of ascent abort modes for space shuttle missions: intact aborts and contingency aborts. Intact aborts are designed to provide a safe return of the orbiter to a planned landing site. Contingency aborts are designed to permit flight crew survival following more severe failures when an intact abort is not possible. A contingency abort would generally result in a ditch operation.

Intact Aborts

There are four types of intact aborts: abort to orbit (ATO), abort once around (AOA), transoceanic abort landing (TAL) and return to launch site (RTLS).

Return to Launch Site

The RTLS abort mode is designed to allow the return of the orbiter, crew, and payload to the launch site, KSC, approximately 25 minutes after liftoff.

The RTLS profile is designed to accommodate the loss of thrust from one space shuttle main engine between liftoff and approximately four minutes 20 seconds, after which not enough main propulsion system propellant remains to return to the launch site. An RTLS can be considered to consist of three stages – a powered stage, during which the space shuttle main engines are still thrusting; an external tank separation phase; and the glide phase, during which the orbiter glides to a landing at the KSC. The powered RTLS phase begins with the crew selection of the RTLS abort, after solid rocket booster separation. The crew selects the abort mode by positioning the abort rotary switch to RTLS and depressing the abort push button. The time at which the RTLS is selected depends on the reason for the abort. For example, a three-engine RTLS is selected at the last moment, about 3 minutes, 34 seconds into the mission; whereas an RTLS chosen due to an engine out at liftoff is selected at the earliest time, about 2 minutes, 20 seconds into the mission (after solid rocket booster separation).

After RTLS is selected, the vehicle continues downrange to dissipate excess main propulsion system propellant. The goal is to leave only enough main propulsion system propellant to be able to turn the vehicle around, fly back toward the KSC and achieve the proper main engine cutoff conditions so the vehicle can glide to the KSC after external tank separation. During the downrange phase, a pitch-around maneuver is initiated (the time depends in part on the time of a space shuttle main engine

failure) to orient the orbiter/external tank configuration to a heads-up attitude, pointing toward the launch site. At this time, the vehicle is still moving away from the launch site, but the space shuttle main engines are now thrusting to null the downrange velocity. In addition, excess orbital maneuvering system and reaction control system propellants are dumped by continuous orbital maneuvering system and reaction control system engine thrustings to improve the orbiter weight and center of gravity for the glide phase and landing.

The vehicle will reach the desired main engine cutoff point with less than 2 percent excess propellant remaining in the external tank. At main engine cutoff minus 20 seconds, a pitch down maneuver (called powered pitch-down) takes the mated vehicle to the required external tank separation attitude and pitch rate. After main engine cutoff has been commanded, the external tank separation sequence begins, including a reaction control system maneuver that ensures that the orbiter does not recontact the external tank and that the orbiter has achieved the necessary pitch attitude to begin the glide phase of the RTLS.

After the reaction control system maneuver has been completed, the glide phase of the RTLS begins. From then on, the RTLS is handled similarly to a normal entry.

Transoceanic Abort Landing

The TAL abort mode was developed to improve the options available when a space shuttle main engine fails after the last RTLS opportunity but before the first time that an AOA can be accomplished with only two space shuttle main engines or when a major orbiter system failure, for example, a large cabin pressure leak or cooling system failure, occurs after the last RTLS opportunity, making it imperative to land as quickly as possible.

In a TAL abort, the vehicle continues on a ballistic trajectory across the Atlantic Ocean to land at a predetermined runway. Landing occurs about 45 minutes after launch. The landing site is selected near the normal ascent ground track of the orbiter to make the most efficient use of space shuttle main engine propellant. The landing site also must have the necessary runway length, weather conditions and U.S. State Department approval. The three landing sites that have been identified for a launch are Zaragoza, Spain; Moron, Spain; and Istres, France.

To select the TAL abort mode, the crew must place the abort rotary switch in the TAL/AOA position and depress the abort push button before main engine cutoff (depressing it after main engine cutoff selects the AOA abort mode). The TAL abort mode begins sending commands to steer the vehicle toward the plane of the landing site. It also rolls the vehicle heads up before main engine cutoff and sends commands to begin an orbital maneuvering system propellant dump (by burning the propellants through the orbital maneuvering system engines and the reaction control system engines). This dump is necessary to increase vehicle performance (by decreasing weight) to place the center of gravity in the proper place for vehicle control and to decrease the vehicle's landing weight. TAL is handled like a normal entry.

Abort to Orbit

An ATO is an abort mode used to boost the orbiter to a safe orbital altitude when

performance has been lost and it is impossible to reach the planned orbital altitude. If a space shuttle main engine fails in a region that results in a main engine cutoff under speed, the MCC will determine that an abort mode is necessary and will inform the crew. The orbital maneuvering system engines would be used to place the orbiter in a circular orbit.

Abort Once Around

The AOA abort mode is used in cases in which vehicle performance has been lost to such an extent that either it is impossible to achieve a viable orbit or not enough orbital maneuvering system propellant is available to accomplish the orbital maneuvering system thrusting maneuver to place the orbiter on orbit and the deorbit thrusting maneuver. In addition, an AOA is used in cases in which a major systems problem (cabin leak, loss of cooling) makes it necessary to land quickly. In the AOA abort mode, one orbital maneuvering system thrusting sequence is made to adjust the post-main engine cutoff orbit so a second orbital maneuvering system thrusting sequence will result in the vehicle deorbiting and landing at the AOA landing site (White Sands, N.M.; Edwards Air Force Base, Calif.; or the Kennedy Space Center, Fla). Thus, an AOA results in the orbiter circling the Earth once and landing about 90 minutes after liftoff.

After the deorbit thrusting sequence has been executed, the flight crew flies to a landing at the planned site much as it would for a nominal entry.

Contingency Aborts

Contingency aborts are caused by loss of more than one main engine or failures in other systems. Loss of one main engine while another is stuck at a low thrust setting also may necessitate a contingency abort. Such an abort would maintain orbiter integrity for in-flight crew escape if a landing cannot be achieved at a suitable landing field.

Contingency aborts due to system failures other than those involving the main engines would normally result in an intact recovery of vehicle and crew. Loss of more than one main engine may, depending on engine failure times, result in a safe runway landing. However, in most three-engine-out cases during ascent, the orbiter would have to be ditched. The inflight crew escape system would be used before ditching the orbiter.

Abort Decisions

There is a definite order of preference for the various abort modes. The type of failure and the time of the failure determine which type of abort is selected. In cases where performance loss is the only factor, the preferred modes are ATO, AOA, TAL and RTLS, in that order. The mode chosen is the highest one that can be completed with the remaining vehicle performance.

In the case of some support system failures, such as cabin leaks or vehicle cooling problems, the preferred mode might be the one that will end the mission most quickly. In these cases, TAL or RTLS might be preferable to AOA or ATO. A contingency abort is never chosen if another abort option exists.

Mission Control Houston is prime for calling these aborts because it has a more precise knowledge of the orbiter's position than the crew can obtain from on-board systems. Before main engine cutoff, Mission Control makes periodic calls to the crew to identify which abort mode is (or is not) available. If ground

communications are lost, the flight crew has onboard methods, such as cue cards, dedicated displays and display information, to determine the abort region. Which abort mode is selected depends on the cause and timing of the failure causing the abort and which mode is safest or improves mission success. If the problem is a space shuttle main engine failure, the flight crew and Mission Control Center select the best option available at the time a main engine fails.

If the problem is a system failure that jeopardizes the vehicle, the fastest abort mode that results in the earliest vehicle landing is chosen. RTLS and TAL are the quickest options (35 minutes), whereas an AOA requires about 90 minutes. Which of these is selected depends on the time of the failure with three good space shuttle main engines.

The flight crew selects the abort mode by positioning an abort mode switch and depressing an abort push button.

SHUTTLE ABORT HISTORY

RSLS Abort History

(STS-41 D) June 26, 1984

The countdown for the second launch attempt for Discovery's maiden flight ended at T-4 seconds when the orbiter's computers detected a sluggish valve in main engine No. 3. The main engine was replaced and Discovery was finally launched on Aug. 30, 1984.

(STS-51 F) July 12, 1985

The countdown for Challenger's launch was halted at T-3 seconds when onboard computers detected a problem with a coolant valve on main engine No. 2. The valve was replaced and Challenger was launched on July 29, 1985.

(STS-55) March 22, 1993

The countdown for Columbia's launch was halted by onboard computers at T-3 seconds following a problem with purge pressure readings in the oxidizer preburner on main engine No. 2. Columbia's three main engines were replaced on the launch pad, and the flight was rescheduled behind Discovery's launch on STS-56. Columbia finally launched on April 26, 1993.

(STS-51) Aug. 12, 1993

The countdown for Discovery's third launch attempt ended at the T-3 second mark when onboard computers detected the failure of one of four sensors in main engine No. 2 which monitor the flow of hydrogen fuel to the engine. All of Discovery's main engines were ordered replaced on the launch pad, delaying the shuttle's fourth launch attempt until Sept. 12, 1993.

(STS-68) Aug. 18, 1994

The countdown for Endeavour's first launch attempt ended 1.9 seconds before liftoff when onboard computers detected higher than acceptable readings in one channel of a sensor monitoring the discharge temperature of the high pressure oxidizer turbopump in main engine No. 3. A test firing of the engine at the Stennis Space Center in Mississippi on September 2nd confirmed that a slight drift in a fuel flow meter in the engine caused a slight increase in the turbopump's temperature. The test firing also confirmed a slightly slower start for main engine No. 3 during the pad abort, which could have contributed to the higher temperatures. After Endeavour was brought back to the Vehicle Assembly Building to be outfitted with three replacement engines,

NASA managers set Oct. 2 as the date for Endeavour's second launch attempt.

Abort to Orbit History

(STS-51 F) July 29, 1985

After an RSLS abort on July 12, 1985, Challenger was launched on July 29, 1985. Five minutes and 45 seconds after launch, a sensor problem resulted in the shutdown of center engine No. 1, resulting in a safe "abort to orbit" and successful completion of the mission.

SPACE SHUTTLE MAIN ENGINES

Developed in the 1970s by NASA's Marshall Space Flight Center, MSFC in Huntsville, Ala., the space shuttle main engine is the most advanced liquid-fueled rocket engine ever built. Every space shuttle main engine is tested and proven flight worthy at NASA's Stennis Space Center in south Mississippi, before installation on an orbiter. Its main features include variable thrust, high performance reusability, high redundancy and a fully integrated engine controller.

The shuttle's three main engines are mounted on the orbiter aft fuselage in a triangular pattern. Spaced so that they are movable during launch, the engines are used, in conjunction with the solid rocket boosters, to steer the shuttle vehicle.

Each of these powerful main engines is 14 feet long, weighs about 7,000 pounds and is 7.5 feet in diameter at the end of its nozzle.

The engines operate for about 8.5 minutes during liftoff and ascent, burning more than 500,000 gallons of super-cold liquid hydrogen and liquid oxygen propellants stored in the external tank attached to the underside of the shuttle. The engines shut down just before the shuttle, traveling at about 17,000 miles per hour, reaches orbit.

The main engine operates at greater temperature extremes than any mechanical system in common use today. The fuel, liquefied hydrogen at -423 degrees Fahrenheit, is the second coldest liquid on Earth. When it and the liquid oxygen are combusted, the temperature in the main combustion chamber is 6,000 degrees Fahrenheit, hotter than the boiling point of iron.

The main engines use a staged combustion cycle so that all propellants entering the engines are used to produce thrust, or power, more efficiently than any previous rocket engine. In a staged combustion cycle, propellants are first burned partially at high pressure and relatively low temperature, and then burned completely at high temperature and pressure in the main combustion chamber. The rapid mixing of the propellants under these conditions is so complete that 99 percent of the fuel is burned.

At normal operating level, each engine generates 490,847 pounds of thrust, measured in a vacuum. Full power is 512,900 pounds of thrust; minimum power is 316,100 pounds of thrust.

The engine can be throttled by varying the output of the preburners, thus varying the speed of the high-pressure turbopumps and, therefore, the flow of the propellant.

At about 26 seconds into ascent, the main engines are throttled down to 316,000 pounds of thrust to keep the dynamic pressure on the vehicle below a specified level, about 580 pounds per square foot, known as max q. Then, the engines are throttled back up to

normal operating level at about 60 seconds. This reduces stress on the vehicle. The main engines are throttled down again at about seven minutes, 40 seconds into the mission to maintain three g's, three times the Earth's gravitational pull, reducing stress on the crew and the vehicle. This acceleration level is about one-third the acceleration experienced on previous crewed space vehicles.

About 10 seconds before main engine cutoff, or MECO, the cutoff sequence begins. About three seconds later the main engines are commanded to begin throttling at 10 percent thrust per second until they achieve 65 percent thrust. This is held for about 6.7 seconds, and the engines are shut down.

The engine performance has the highest thrust for its weight of any engine yet developed. In fact, one space shuttle main engine generates sufficient thrust to maintain the flight of two and one-half Boeing 747 airplanes.

The space shuttle main engine also is the first rocket engine to use a built-in electronic digital controller, or computer. The controller accepts commands from the orbiter for engine start, change in throttle, shutdown and monitoring of engine operation.

NASA continues to increase the reliability and safety of shuttle flights through a series of enhancements to the space shuttle main engines. The engines were modified in 1988, 1995, 1998, 2001 and 2007. Modifications include new high-pressure fuel and oxidizer turbopumps that reduce maintenance and operating costs of the engine, a two-duct powerhead that reduces pressure and turbulence in the engine, and a single-coil heat exchanger that lowers the number of post flight inspections required. Another modification incorporates a large-throat main combustion chamber that improves the engine's reliability by reducing pressure and temperature in the chamber.

The most recent engine enhancement is the Advanced Health Management System, or AHMS, which made its first flight in 2007. AHMS is a controller upgrade that provides new monitoring and insight into the health of the two most complex components of the space shuttle main engine – the high pressure fuel turbopump and the high pressure oxidizer turbopump. New advanced digital signal processors monitor engine vibration and have the ability to shut down an engine if vibration exceeds safe limits. AHMS was developed by engineers at Marshall.

After the orbiter lands, the engines are removed and returned to a processing facility at Kennedy Space Center, Fla., where they are rechecked and readied for the next flight. Some components are returned to the main engine's prime contractor, Pratt & Whitney Rocketdyne, West Palm Beach, Fla., for regular maintenance. The main engines are designed to operate for 7.5 accumulated hours.

SPACE SHUTTLE SOLID ROCKET BOOSTERS (SRB)

The two solid rocket boosters required for a space shuttle launch and first two minutes of powered flight boast the largest solid-propellant motors ever flown. They are the first large rockets designed for reuse and are the only solid rocket motors rated for human flight. The SRBs have the capacity to carry the entire weight of the external tank, or ET, and orbiter, and to transmit the weight load

through their structure to the mobile launch platform, or MLP.

The SRBs provide 71.4 percent of the thrust required to lift the space shuttle off the launch pad and during first-stage ascent to an altitude of about 150,000 feet, or 28 miles. At launch, each booster has a sea level thrust of approximately 3.3 million pounds and is ignited after the ignition and verification of the three space shuttle main engines, or SSMEs.

SRB apogee occurs at an altitude of about 230,000 feet, or 43 miles, 75 seconds after separation from the main vehicle. At booster separation, the space shuttle orbiter has reached an altitude of 24 miles and is traveling at a speed in excess of 3,000 miles per hour.

The primary elements of each booster are nose cap, housing the pilot and drogue parachute; frustum, housing the three main parachutes in a cluster; forward skirt, housing the booster flight avionics, altitude sensing, recovery avionics, parachute cameras and range safety destruct system; four motor segments, containing the solid propellant; motor nozzle; and aft skirt, housing the nozzle and thrust vector control systems required for guidance. Each SRB possesses its own redundant auxiliary power units and hydraulic pumps.

SRB impact occurs in the ocean approximately 140 miles downrange. SRB retrieval is provided after each flight by specifically designed and built ships. The frustums, drogue and main parachutes are loaded onto the ships along with the boosters and towed back to the Kennedy Space Center, where they are disassembled and refurbished for reuse. Before retirement, each booster can be used as many as 20 times.

Each booster is just over 149 feet long and 12.17 feet in diameter. Both boosters have a combined weight of 1,303,314 pounds at lift-off. They are attached to the ET at the SRB aft attach ring by an upper and lower attach strut and a diagonal attach strut. The forward end of each SRB is affixed to the ET by one attach bolt and ET ball fitting on the forward skirt. While positioned on the launch pad, the space shuttle is attached to the MLP by four bolts and explosive nuts equally spaced around each SRB. After ignition of the solid rocket motors, the nuts are severed by small explosives that allow the space shuttle vehicle to perform lift off.

United Space Alliance (USA)

USA, at KSC facilities, is responsible for all SRB operations except the motor and nozzle portions. In conjunction with maintaining sole responsibility for manufacturing and processing of the non-motor hardware and vehicle integration, USA provides the service of retrieval, post flight inspection and analysis, disassembly and refurbishment of the hardware. USA also exclusively retains comprehensive responsibility for the orbiter.

The reusable solid rocket motor segments are shipped from ATK Launch Systems in Utah to KSC, where they are mated by USA personnel to the other structural components – the forward assembly, aft skirt, frustum and nose cap – in the Vehicle Assembly Building. Work involves the complete disassembly and refurbishment of the major SRB structures – the aft skirts, frustums, forward skirts and all ancillary hardware – required to complete an SRB stack and mate to the ET. Work then proceeds to ET/SRB mate, mate with the orbiter and finally, space shuttle close out operations. After hardware restoration concerning flight

configuration is complete, automated checkout and hot fire are performed early in hardware flow to ensure that the refurbished components satisfy all flight performance requirements.

ATK Launch Systems (ATK)

ATK Launch Systems of Brigham City, Utah, manufactures space shuttle reusable solid rocket motors, or RSRMs, at their Utah facility. Each RSRM – just over 126 feet long and 12 feet in diameter – consists of four rocket motor segments and an aft exit cone assembly is. From ignition to end of burn, each RSRM generates an average thrust of 2.6 million pounds and burns for approximately 123 seconds. Of the motor's total weight of 1.25 million pounds, propellant accounts for 1.1 million pounds. The four motor segments are matched by loading each from the same batches of propellant ingredients to minimize any thrust imbalance. The segmented casing design assures maximum flexibility in fabrication and ease of transportation and handling. Each segment is shipped to KSC on a heavy-duty rail car with a specialty built cover.

SRB Hardware Design Summary

Hold-Down Posts

Each SRB has four hold-down posts that fit into corresponding support posts on the MLP. Hold-down bolts secure the SRB and MLP posts together. Each bolt has a nut at each end, but the top nut is frangible, or breakable. The top nut contains two NASA Standard detonators, or NSDs, that, when ignited at solid rocket motor ignition command, split the upper nut in half.

Splitting the upper nuts allow the hold-down bolts to be released and travel downward because of NSD gas pressure, gravity and the release of tension in the bolt, which is pretensioned before launch. The bolt is stopped by the stud deceleration stand which contains sand to absorb the shock of the bolt dropping down several feet. The SRB bolt is 28 inches long, 3.5 inches in diameter and weighs approximately 90 pounds. The frangible nut is captured in a blast container on the aft skirt specifically designed to absorb the impact and prevent pieces of the nut from liberating and becoming debris that could damage the space shuttle.

Integrated Electronic Assembly (IEA)

The aft IEA, mounted in the ET/SRB attach ring, provides the electrical interface between the SRB systems and the obiter. The aft IEA receives data, commands, and electrical power from the orbiter and distributes these inputs throughout each SRB. Components located in the forward assemblies of each SRB are powered by the aft IEA through the forward IEA, except for those utilizing the recovery and range safety batteries located in the forward assemblies. The forward IEA communicates with and receives power from the orbiter through the aft IEA, but has no direct electrical connection to the orbiter.

Electrical Power Distribution

Electrical power distribution in each SRB consists of orbiter-supplied main dc bus power to each SRB via SRB buses A, B and C. Orbiter main dc buses A, B and C supply main dc bus power to corresponding SRB buses A, B and C. In addition, orbiter main dc, bus C supplies backup power to SRB buses A and B, and orbiter bus B supplies backup power to SRB bus C. This electrical power distribution

arrangement allows all SRB buses to remain powered in the event one orbiter main bus fails.

The nominal dc voltage is 28 V dc, with an upper limit of 32 V dc and a lower limit of 24 V dc.

Hydraulic Power Units (HPUs)

There are two self-contained, independent HPUs on each SRB. Each HPU consists of an auxiliary power unit, or APU; Fuel Supply Module, or FSM; hydraulic pump; hydraulic reservoir; and hydraulic fluid manifold assembly. The APUs are fueled by hydrazine and generate mechanical shaft power to a hydraulic pump that produces hydraulic pressure for the SRB hydraulic system. The APU controller electronics are located in the SRB aft integrated electronic assemblies on the aft ET attach rings. The two separate HPUs and two hydraulic systems are located inside the aft skirt of each SRB between the SRB nozzle and skirt. The HPU components are mounted on the aft skirt between the rock and tilt actuators. The two systems operate from T minus 28 seconds until SRB separation from the orbiter and ET. The two independent hydraulic systems are connected to the rock and tilt servoactuators.

The HPUs and their fuel systems are isolated from each other. Each fuel supply module, or tank, contains 22 pounds of hydrazine. The fuel tank is pressurized with gaseous nitrogen at 400 psi to provide the force to expel via positive expulsion the fuel from the tank to the fuel distribution line. A positive fuel supply to the APU throughout its operation is maintained.

The fuel isolation valve is opened at APU startup to allow fuel to flow to the APU fuel pump and control valves and then to the gas generator. The gas generator's catalytic action decomposes the fuel and creates a hot gas. It feeds the hot gas exhaust product to the APU two-stage gas turbine. Fuel flows primarily through the startup bypass line until the APU speed is such that the fuel pump outlet pressure is greater than the bypass line's, at which point all the fuel is supplied to the fuel pump.

The APU turbine assembly provides mechanical power to the APU gearbox, which drives the APU fuel pump, hydraulic pump and lube oil pump. The APU lube oil pump lubricates the gearbox. The turbine exhaust of each APU flows over the exterior of the gas generator, cooling it and directing it overboard through an exhaust duct.

When the APU speed reaches 100 percent, the APU primary control valve closes and the APU speed is controlled by the APU controller electronics. If the primary control valve logic fails to the open state, the secondary control valve assumes control of the APU at 112 percent speed. Each HPU on an SRB is connected to both servoactuators. One HPU serves as the primary hydraulic source for the servoactuator and the other HPU serves as the secondary hydraulics for the servoactuator. Each servoactuator has a switching valve that allows the secondary hydraulics to power the actuator if the primary hydraulic pressure drops below 2,050 psi. A switch contact on the switching valve will close when the valve is in the secondary position. When the valve is closed, a signal is sent to the APU controller that inhibits the 100 percent APU speed control logic and enables the 112 percent APU speed control logic. The 100 percent APU speed enables one APU/HPU to supply sufficient

operating hydraulic pressure to both servoactuators of that SRB.

The APU 100 percent speed corresponds to 72,000 rpm, 110 percent to 79,200 rpm and 112 percent to 80,640 rpm.

The hydraulic pump speed is 3,600 rpm and supplies hydraulic pressure of 3,050, plus or minus 50 psi. A high-pressure relief valve provides overpressure protection to the hydraulic system and relieves at 3,750 psi.

The APUs/HPUs and hydraulic systems are reusable for 20 missions.

Thrust Vector Control (TVC)

Each SRB has two hydraulic gimbal servoactuators: one for rock and one for tilt. The servoactuators provide the force and control to gimbal the nozzle for TVC. The all-axis gimbaling capability is 8 degrees. Each nozzle has a carbon cloth liner that erodes and chars during firing. The nozzle is a convergent-divergent, movable design in which an aft pivot-point flexible bearing is the gimbal mechanism.

The space shuttle ascent TVC portion of the flight control system directs the thrust of the three SSMEs and the two SRB nozzles to control shuttle attitude and trajectory during liftoff and ascent. Commands from the guidance system are transmitted to the ascent TVC, or ATVC, drivers, which transmit signals proportional to the commands to each servoactuator of the main engines and SRBs. Four independent flight control system channels and four ATVC channels control six main engine and four SRB ATVC drivers, with each driver controlling one hydraulic port on each main and SRB servoactuator.

Each SRB servoactuator consists of four independent, two-stage servovalves that receive signals from the drivers. Each servovalve controls one power spool in each actuator, which positions an actuator ram and the nozzle to control the direction of thrust.

The four servovalves in each actuator provide a force-summed majority voting arrangement to position the power spool. With four identical commands to the four servovalves, the actuator force-sum action prevents a single erroneous command from affecting power ram motion. If the erroneous command persists for more than a predetermined time, differential pressure sensing activates a selector valve to isolate and remove the defective servovalve hydraulic pressure. This permits the remaining channels and servovalves to control the actuator ram spool.

Failure monitors are provided for each channel to indicate which channel has been bypassed. An isolation valve on each channel provides the capability of resetting a failed or bypassed channel.

Each actuator ram is equipped with transducers for position feedback to the thrust vector control system. Within each servoactuator ram is a splashdown load relief assembly to cushion the nozzle at water splashdown and prevent damage to the nozzle flexible bearing.

SRB Rate Gyro Assemblies (RGAs)

Each SRB contains two RGAs mounted in the forward skirt watertight compartment. Each RGA contains two orthogonally mounted gyroscopes – pitch and yaw axes. In conjunction with the orbiter roll rate gyros, they provide angular rate information that describes the inertial motion of the vehicle cluster to the

orbiter computers and the guidance, navigation and control system during first stage ascent to SRB separation. At SRB separation, all guidance control data is handed off from the SRB RGAs to the orbiter RGAs. The RGAs are designed and qualified for 20 missions.

Propellant

The propellant mixture in each SRB motor consists of ammonium perchlorate, an oxidizer, 69.6 percent by weight; aluminum, a fuel, 16 percent by weight; iron oxide, a catalyst, 0.4 percent by weight; polymer, a binder that holds the mixture together, 12.04 percent by weight; and epoxy curing agent, 1.96 percent by weight. The propellant is an 11-point star-shaped perforation in the forward motor segment and a double truncated cone perforation in each of the aft segments and aft closure. This configuration provides high thrust at ignition and then reduces the thrust by about one-third 50 seconds after liftoff to prevent overstressing the vehicle during maximum dynamic pressure.

SRB Ignition

SRB ignition can occur only when a manual lock pin from each SRB safe and arm device has been removed by the ground crew during prelaunch activities. At T minus 5 minutes, the SRB safe and arm device is rotated to the arm position. The solid rocket motor ignition commands are issued when the three SSMEs are at or above 90 percent rated thrust; no SSME fail and/or SRB ignition pyrotechnic initiator controller, or PIC low voltage is indicated; and there are no holds from the launch processing system, or LPS.

The solid rocket motor ignition commands are sent by the orbiter computers through the master events controllers, or MECs, to the NSDs installed in the safe and arm device in each SRB. A pyrotechnic initiation controller, or PIC, is a single-channel capacitor discharge device that controls the firing of each pyrotechnic device. Three signals must be present simultaneously for the PIC to generate the pyro firing output. These signals – arm, fire 1 and fire 2 – originate in the orbiter general-purpose computers and are transmitted to the MECs. The MECs reformat them to 28 V dc signals for the PICs. The arm signal charges the PIC capacitor to 40 V dc, minimum 20 V dc.

The fire 2 commands cause the redundant NSDs to fire through a thin barrier seal down a flame tunnel. This ignites a pyro booster charge, which is retained in the safe and arm device behind a perforated plate. The booster charge ignites the propellant in the igniter initiator; and combustion products of this propellant ignite the solid rocket motor igniter, which fires down the length of the solid rocket motor igniting the solid rocket motor propellant.

The general purpose computer, or GPC, launch sequence also controls certain critical main propulsion system valves and monitors the engine-ready indications from the SSMEs. The main propulsion system, or MPS, start commands are issued by the on-board computers at T minus 6.6 seconds. There is a staggered start – engine three, engine two, engine one – within 0.25 of a second, and the sequence monitors the thrust buildup of each engine. All three SSMEs must reach the required 90 percent thrust within three seconds; otherwise, an orderly shutdown is commanded and safing functions are initiated.

Normal thrust buildup to the required 90 percent thrust level will result in the SSMEs being commanded to the liftoff position at T minus 3 seconds as well as the fire 1 command being issued to arm the SRBs. At T minus three seconds, the vehicle base bending load modes are allowed to initialize.

At T minus 0, the two SRBs are ignited by the four orbiter on-board computers; commands are sent to release the SRBs; the two T-0 umbilicals, one on each side of the spacecraft, are retracted; the on-board master timing unit, event timer and mission event timers are started; the three SSMEs are at 100 percent; and the ground launch sequence is terminated.

SRB Separation

The SRB/ET separation subsystem provides for separation of the SRBs from the orbiter/ET without damage to or recontact of the elements – SRBs, orbiter/ET – during or after separation for nominal modes. SRB separation is initiated when the three solid rocket motor chamber pressure transducers are processed in the redundancy management middle value select and the head end chamber pressure of both SRBs is less than or equal to 50 psi. A backup cue is the time elapsed from booster ignition.

The separation sequence is initiated, commanding the thrust vector control actuators to the null position and putting the main propulsion system into a second-stage configuration 0.8 second from sequence initialization, which ensures the thrust of each SRB is less than 100,000 pounds. Orbiter yaw attitude is held for four seconds and SRB thrust drops to less than 60,000 pounds. The SRBs separate from the ET within 30 milliseconds of the ordnance firing command.

The forward attachment point consists of a ball on the SRB and socket on the ET, held together by one bolt. The bolt contains one NSD pressure cartridge at each end. The forward attachment point also carries the range safety system cross-strap wiring connecting each SRB range safety system, or RSS, and the ET RSS with each other.

The aft attachment points consist of three separate struts: upper, diagonal, and lower. Each strut contains one bolt with an NSD pressure cartridge at each end. The upper strut also carries the umbilical interface between its SRB and the external tank and on to the orbiter.

Redesigned Booster Separation Motors (RBSM)

Eight Booster Separation Motors, or BSMs, are located on each booster – four on the forward section and four on the aft skirt. BSMs provide the force required to push the SRBs away from the orbiter/ET at separation. Each BSM weighs approximately 165 pounds and is 31.1 inches long and 12.8 inches in diameter. Once the SRBs have completed their flight, the BSMs are fired to jettison the SRBs away from the orbiter and external tank, allowing the boosters to parachute to Earth and be reused. The BSMs in each cluster of four are ignited by firing redundant NSD pressure cartridges into redundant confined detonating fuse manifolds. The separation commands issued from the orbiter by the SRB separation sequence initiate the redundant NSD pressure cartridge in each bolt and ignite the BSMs to effect a clean separation.

Redesigned BSMs flew for the first time in both forward and aft locations on STS-125. As a result of vendor viability and manifest support issues, space shuttle BSMs are now being manufactured by ATK. The igniter has been

redesigned and other changes include material upgrades driven by obsolescence issues and improvements to process and inspection techniques.

SRB Cameras

Each SRB flies with a complement of four cameras, three mounted for exterior views during launch, separation and descent; and one mounted internal to the forward dome for main parachute performance assessment during descent.

The ET observation camera is mounted on the SRB forward skirt and provides a wide-angle view of the ET intertank area. The camera is activated at lift off by a G-switch and records for 350 seconds, after which the recorder is switched to a similar camera in the forward skirt dome to view the deployment and performance of the main parachutes to splash down. These cameras share a digital tape recorder located within the data acquisition system.

The ET ring camera is mounted on the ET attach ring and provides a view up the stacked vehicle on the orbiter underside and the bipod strut attach point.

The forward skirt camera is mounted on the external surface of the SRB forward skirt and provides a view aft down the stacked vehicle of the orbiter underside and the wing leading edge reinforced carbon-carbon, or RCC, panels.

The ET attach ring camera and forward skirt camera are activated by a global positioning system command at approximately T minus 1 minute 56 seconds to begin recording at approximately T minus 50 seconds. The camera images are recorded through splash down. These cameras each have a dedicated recorder and are recorded in a digital format. The cameras were designed, qualified, and implemented by USA after Columbia to provide enhanced imagery capabilities to capture potential debris liberation beginning with main engine start and continuing through SRB separation.

The camera videos are available for engineering review approximately 24 hours following the arrival of the boosters at KSC.

Range Safety Systems (RSS)

The RSS consists of two antenna couplers; command receivers/decoders; a dual distributor; a safe and arm device with two NSDs; two confined detonating fuse manifolds; seven confined detonator fuse, or CDF assemblies; and one linear-shaped charge.

The RSS provides for destruction of a rocket or part of it with on-board explosives by remote command if the rocket is out of control, to limit danger to people on the ground from crashing pieces, explosions, fire, and poisonous substances.

The space shuttle has two RSSs, one in each SRB. Both are capable of receiving two command messages – arm and fire – which are transmitted from the ground station. The RSS is only used when the space shuttle violates a launch trajectory red line.

The antenna couplers provide the proper impedance for radio frequency and ground support equipment commands. The command receivers are tuned to RSS command frequencies and provide the input signal to the distributors when an RSS command is sent. The command decoders use a code plug to

prevent any command signal other than the proper command signal from getting into the distributors. The distributors contain the logic to supply valid destruct commands to the RSS pyrotechnics.

The NSDs provide the spark to ignite the CDF that in turn ignites the linear shaped charge for space shuttle destruction. The safe and arm device provides mechanical isolation between the NSDs and the CDF before launch and during the SRB separation sequence.

The first message, called arm, allows the onboard logic to enable a destruct and illuminates a light on the flight deck display and control panel at the commander and pilot station. The second message transmitted is the fire command. The SRB distributors in the SRBs are cross-strapped together. Thus, if one SRB received an arm or destruct signal, the signal would also be sent to the other SRB.

Electrical power from the RSS battery in each SRB is routed to RSS system A. The recovery battery in each SRB is used to power RSS system B as well as the recovery system in the SRB. The SRB RSS is powered down during the separation sequence, and the SRB recovery system is powered up.

Descent and Recovery

After separation and at specified altitudes, the SRB forward avionics system initiates the release of the nose cap, which houses a pilot parachute and drogue parachute; and the frustum, which houses the three main parachutes. Jettison of the nose cap at 15,700 feet deploys a small pilot parachute and begins to slow the SRB decent. At an altitude of 15,200 feet the pilot parachute pulls the drogue parachute from the frustum. The drogue parachute fully inflates in stages, and at 5,500 feet pulls the frustum away from the SRB, which initiates the deployment of the three main parachutes. The parachutes also inflate in stages and further slow the decent of the SRBs to their final velocity at splashdown. The parachutes slow each SRB from 368 mph at first deployment to 52 mph at splashdown, allowing for the recovery and reuse of the boosters.

Two 176-foot recovery ships, Freedom Star and Liberty Star, are on station at the splashdown zone to retrieve the frustums with drogue parachutes attached, the main parachutes and the SRBs. The SRB nose caps and solid rocket motor nozzle extensions are not recovered. The SRBs are dewatered using an enhanced diver operating plug to facilitate tow back. These plugs are inserted into the motor nozzle and air is pumped into the booster, causing it to lay flat in the water to allow it to be easily towed. The boosters are then towed back to the refurbishment facilities. Each booster is removed from the water and components are disassembled and washed with fresh and deionized water to limit saltwater corrosion. The motor segments, igniter and nozzle are shipped back to ATK in Utah for refurbishment. The nonmotor components and structures are disassembled by USA and are refurbished to like-new condition at both KSC and equipment manufacturers across the country.

SPACE SHUTTLE SUPER LIGHT WEIGHT TANK (SLWT)

The super lightweight external tank (SLWT) made its first shuttle flight June 2, 1998, on mission STS-91. The SLWT is 7,500 pounds lighter than the standard external tank. The lighter weight tank allows the shuttle to deliver

International Space Station elements (such as the service module) into the proper orbit.

The SLWT is the same size as the previous design. But the liquid hydrogen tank and the liquid oxygen tank are made of aluminum lithium, a lighter, stronger material than the metal alloy used for the shuttle's current tank. The tank's structural design has also been improved, making it 30 percent stronger and 5 percent less dense.

The SLWT, like the standard tank, is manufactured at Michoud Assembly, near New Orleans, by Lockheed Martin.

The 154-foot-long external tank is the largest single component of the space shuttle. It stands taller than a 15-story building and has a diameter of about 27 feet. The external tank holds over 530,000 gallons of liquid hydrogen and liquid oxygen in two separate tanks. The hydrogen (fuel) and liquid oxygen (oxidizer) are used as propellants for the shuttle's three main engines.

EXTERNAL TANK

The 154-foot-long external tank is the largest single component of the space shuttle. It stands taller than a 15-story building and has a diameter of about 27 feet. The external tank holds more than 530,000 gallons of liquid hydrogen and liquid oxygen in two separate tanks, the forward liquid oxygen tank and the aft liquid hydrogen tank. An unpressurized intertank unites the two propellant tanks.

Liquid hydrogen (fuel) and liquid oxygen (oxidizer) are used as propellants for the shuttle's three main engines. The external tank weighs 58,500 pounds empty and 1,668,500 pounds when filled with propellants.

The external tank is the "backbone" of the shuttle during launch, providing structural support for attachment with the solid rocket boosters and orbiter. It is the only component of the shuttle that is not reused. Approximately 8.5 minutes after reaching orbit, with its propellant used, the tank is jettisoned and falls in a preplanned trajectory. Most of the tank disintegrates in the atmosphere, and the remainder falls into the ocean.

The external tank is manufactured at NASA's Michoud Assembly Facility in New Orleans by Lockheed Martin Space Systems.

Foam Facts

The external tank is covered with spray-on foam insulation that insulates the tank before and during launch. More than 90 percent of the tank's foam is applied using an automated system, leaving less than 10 percent to be applied manually.

There are two types of foam on the external tank, known as the Thermal Protection System, or TPS. One is low-density, closed-cell foam on the tank acreage and is known as Spray-On-Foam-Insulation, often referred to by its acronym, SOFI. Most of the tank is covered by either an automated or manually applied SOFI. Most areas around protuberances, such as brackets and structural elements, are applied by pouring foam ingredients into part-specific molds. The other is a denser composite material made of silicone resins and cork and called ablator. An ablator is a material that dissipates heat by eroding. It is used on areas of the external tank subjected to extreme heat, such as the aft dome near the engine exhaust, and remaining protuberances, such as the cable

trays. These areas are exposed to extreme aerodynamic heating.

Closed-cell foam used on the tank was developed to keep the propellants that fuel the shuttle's three main engines at optimum temperature. It keeps the shuttle's liquid hydrogen fuel at -423 degrees Fahrenheit and the liquid oxygen tank at near -297 degrees Fahrenheit, even as the tank sits under the hot Florida sun. At the same time, the foam prevents a buildup of ice on the outside of the tank.

The foam insulation must be durable enough to endure a 180-day stay at the launch pad, withstand temperatures up to 115 degrees Fahrenheit, humidity as high as 100 percent, and resist sand, salt, fog, rain, solar radiation and even fungus. Then, during launch, the foam must tolerate temperatures as high as 2,200 degrees Fahrenheit generated by aerodynamic friction and radiant heating from the 3,000 degrees Fahrenheit main engine plumes. Finally, when the external tank begins reentry into the Earth's atmosphere about 30 minutes after launch, the foam maintains the tank's structural temperatures and allows it to safely disintegrate over a remote ocean location.

Though the foam insulation on the majority of the tank is only 1-inch thick, it adds 4,823 pounds to the tank's weight. In the areas of the tank subjected to the highest heating, insulation is somewhat thicker, between 1.5 to 3 inches thick. Though the foam's density varies with the type, an average density is about 2.4 pounds per cubic foot.

Application of the foam, whether automated by computer or hand-sprayed, is designed to meet NASA's requirements for finish, thickness, roughness, density, strength and adhesion. As in most assembly production situations, the foam is applied in specially designed, environmentally controlled spray cells and applied in several phases, often over a period of several weeks. Before spraying, the foam's raw material and mechanical properties are tested to ensure they meet NASA specifications. Multiple visual inspections of all foam surfaces are performed after the spraying is complete.

Most of the foam is applied at NASA's Michoud Assembly Facility in New Orleans when the tank is manufactured, including most of the "closeout" areas, or final areas applied. These closeouts are done either by hand pouring or manual spraying. Additional closeouts are completed once the tank reaches Kennedy Space Center, Fla.

The super lightweight external tank, or SLWT, made its first shuttle flight in June 1998 on mission STS-91. The SLWT is 7,500 pounds lighter than previously flown tanks. The SLWT is the same size as the previous design, but the liquid hydrogen tank and the liquid oxygen tank are made of aluminum lithium, a lighter, stronger material than the metal alloy used previously.

Beginning with the first Return to Flight mission, STS-114 in June 2005, several improvements were made to improve safety and flight reliability.

Forward Bipod

The external tank's forward shuttle attach fitting, called the bipod, was redesigned to eliminate the large insulating foam ramps as a source of debris. Each external tank has two bipod fittings that connect the tank to the orbiter through the shuttle's two forward

attachment struts. Four rod heaters were placed below each forward bipod, replacing the large insulated foam Protuberance Airload, or PAL, ramps.

Liquid Hydrogen Tank & Liquid Oxygen Intertank Flange Closeouts

The liquid hydrogen tank flange located at the bottom of the intertank and the liquid oxygen tank flange located at the top of the intertank provide joining mechanisms with the intertank. After each of these three component tanks, liquid oxygen, intertank and liquid hydrogen, are joined mechanically, the flanges at both ends are insulated with foam. An enhanced closeout, or finishing, procedure was added to improve foam application to the stringer, or intertank ribbing, and to the upper and lower area of both the liquid hydrogen and liquid oxygen intertank flanges.

Liquid Oxygen Feedline Bellows

The liquid oxygen feedline bellows were reshaped to include a "drip lip" that allows condensate moisture to run off and prevent freezing. A strip heater was added to the forward bellow to further reduce the potential of high density ice or frost formation. Joints on the liquid oxygen feedline assembly allow the feedline to move during installation and during liquid hydrogen tank fill. Because it must flex, it cannot be insulated with foam like the remainder of the tank.

Other tank improvements include:

Liquid Oxygen & Liquid Hydrogen Protuberance Airload (PAL) Ramps

External tank ET-119, which flew on the second Return to Flight mission, STS-121, in July 2006, was the first tank to fly without PAL ramps along portions of the liquid oxygen and liquid hydrogen tanks. These PAL ramps were extensively studied and determined to not be necessary for their original purpose, which was to protect cable trays from aeroelastic instability during ascent. Extensive tests were conducted to verify the shuttle could fly safely without these particular PAL ramps. Extensions were added to the ice frost ramps for the pressline and cable tray brackets, where these PAL ramps were removed to make the geometry of the ramps consistent with other locations on the tank and thereby provide consistent aerodynamic flow. Nine extensions were added, six on the liquid hydrogen tank and three on the liquid oxygen tank.

Engine Cutoff (ECO) Sensor Modification

Beginning with STS-122, ET-125, which launched on Feb. 7, 2008, the ECO sensor system feed through connector on the liquid hydrogen tank was modified by soldering the connector's pins and sockets to address false readings in the system. All subsequent tanks after ET-125 have the same modification.

Liquid Hydrogen Tank Ice Frost Ramps

ET-128, which flew on the STS-124 shuttle mission, May 31, 2008, was the first tank to fly with redesigned liquid hydrogen tank ice frost ramps. Design changes were incorporated at all 17 ice frost ramp locations on the liquid hydrogen tank, stations 1151 through 2057, to reduce foam loss. Although the redesigned ramps appear identical to the previous design, several changes were made. PDL* and NCFI foam have been replaced with BX* manual spray foam in the ramp's base cutout to reduce debonding and cracking; Pressline and cable tray bracket feet corners have been rounded to reduce stresses; shear pin holes have been

sealed to reduce leak paths; isolators were primed to promote adhesion; isolator corners were rounded to help reduce thermal protection system foam stresses; BX manual spray was applied in bracket pockets to reduce geometric voids.

*BX is a type of foam used on the tank's "loseout," or final finished areas; it is applied manually or hand-sprayed. PDL is an acronym for Product Development Laboratory, the first supplier of the foam during the early days of the external tank's development. PDL is applied by pouring foam ingredients into a mold. NCFI foam is used on the aft dome, or bottom, of the liquid hydrogen tank.

Liquid Oxygen Feedline Brackets

ET-128 also was the first tank to fly with redesigned liquid oxygen feedline brackets. Titanium brackets, much less thermally conductive than aluminum, replaced aluminum brackets at four locations, XT 1129, XT 1377, Xt 1624 and Xt 1871. This change minimizes ice formation in under-insulated areas, and reduces the amount of foam required to cover the brackets and the propensity for ice development. Zero-gap/slip plane Teflon material was added to the upper outboard monoball attachment to eliminate ice adhesion. Additional foam has been added to the liquid oxygen feedline to further minimize ice formation along the length of the feedline.

LAUNCH AND LANDING

LAUNCH

As with all previous space shuttle launches, Atlantis has several options to abort its ascent if needed after engine failures or other systems problems. Shuttle launch abort philosophy is intended to facilitate safe recovery of the flight crew and intact recovery of the orbiter and its payload.

Abort modes include:

ABORT-TO-ORBIT (ATO)

This mode is used if there is a partial loss of main engine thrust late enough to permit reaching a minimal 105 by 85 nautical mile orbit with the orbital maneuvering system engines. The engines boost the shuttle to a safe orbital altitude when it is impossible to reach the planned orbital altitude.

TRANSATLANTIC ABORT LANDING (TAL)

The loss of one or more main engines midway through powered flight would force a landing at either Zaragoza, Spain; Moron, Spain; or Istres, France. For launch to proceed, weather conditions must be acceptable at one of these TAL sites.

RETURN-TO-LAUNCH-SITE (RTLS)

If one or more engines shut down early and there is not enough energy to reach Zaragoza, the shuttle would pitch around toward Kennedy until within gliding distance of the Shuttle Landing Facility. For launch to proceed, weather conditions must be forecast to be acceptable for a possible RTLS landing at KSC about 20 minutes after liftoff.

ABORT ONCE AROUND (AOA)

An AOA is selected if the vehicle cannot achieve a viable orbit or will not have enough propellant to perform a deorbit burn, but has enough energy to circle the Earth once and land about 90 minutes after liftoff.

LANDING

The primary landing site for Atlantis on STS-129 is the Kennedy Space Center's Shuttle Landing Facility. Alternate landing sites that could be used if needed because of weather conditions or systems failures are at Edwards Air Force Base, Calif., and White Sands Space Harbor, N.M.

This page intentionally blank.

ACRONYMS AND ABBREVIATIONS

A/G	Alignment Guides
A/L	Airlock
AAA	Avionics Air Assembly
ABC	Audio Bus Controller
ACBM	Active Common Berthing Mechanism
ACDU	Airlock Control and Display Unit
ACO	Assembly Checkout Officer
ACS	Atmosphere Control and Supply
ACU	Arm Control Unit
ADS	Audio Distribution System
AE	Approach Ellipsoid
AEP	Airlock Electronics Package
AI	Approach Initiation
AIS	Automatic Identification System
AJIS	Alpha Joint Interface Structure
AM	Atmosphere Monitoring
AMOS	Air Force Maui Optical and Supercomputing Site
AOH	Assembly Operations Handbook
APAS	Androgynous Peripheral Attachment
APCU	Assembly Power Converter Unit
APE	Antenna Pointing Electronics
	Audio Pointing Equipment
APFR	Articulating Portable Foot Restraint
APM	Antenna Pointing Mechanism
APS	Automated Payload Switch
APV	Automated Procedure Viewer
AR	Atmosphere Revitalization
ARCU	American-to-Russian Converter Unit
ARS	Atmosphere Revitalization System
ASW	Application Software
ATA	Ammonia Tank Assembly
ATCS	Active Thermal Control System
ATU	Audio Terminal Unit
BAD	Broadcast Ancillary Data
BC	Bus Controller
BCDU	Battery Charge/Discharge Unit
	Berthing Mechanism Control and Display Unit

BEP	Berthing Mechanism Electronics Package
BGA	Beta Gimbal Assembly
BIC	Bus Interface Controller
BIT	Built-In Test
BM	Berthing Mechanism
BOS	BIC Operations Software
BSS	Basic Software
BSTS	Basic Standard Support Software
C&C	Command and Control
C&DH	Command and Data Handling
C&T	Communication and Tracking
C&W	Caution and Warning
C/L	Crew Lock
C/O	Checkout
CAM	Collision Avoidance Maneuver
CAPE	Canister for All Payload Ejections
CAS	Common Attach System
CB	Control Bus
CBCS	Centerline Berthing Camera System
CBM	Common Berthing Mechanism
CCA	Circuit Card Assembly
CCAA	Common Cabin Air Assembly
CCHA	Crew Communication Headset Assembly
CCP	Camera Control Panel
CCT	Communication Configuration Table
CCTV	Closed-Circuit Television
CDR	Space Shuttle Commander
CDRA	Carbon Dioxide Removal Assembly
CETA	Crew Equipment Translation Aid
CHeCS	Crew Health Care System
CHX	Cabin Heat Exchanger
CISC	Complicated Instruction Set Computer
CLA	Camera Light Assembly
CLPA	Camera Light Pan Tilt Assembly
CMG	Control Moment Gyro
COTS	Commercial Off the Shelf
CPA	Control Panel Assembly
CPB	Camera Power Box
CR	Change Request
CRT	Cathode-Ray Tube

CSA	Canadian Space Agency
CSA-CP	Compound Specific Analyzer
CTC	Cargo Transport Container
CVIU	Common Video Interface Unit
CVT	Current Value Table
CZ	Communication Zone
DB	Data Book
DC	Docking Compartment
DCSU	Direct Current Switching Unit
DDCU	DC-to-DC Converter Unit
DEM	Demodulator
DFL	Decommutation Format Load
DIU	Data Interface Unit
DMS	Data Management System
DMS-R	Data Management System-Russian
DPG	Differential Pressure Gauge
DPU	Baseband Data Processing Unit
DRTS	Japanese Data Relay Satellite
DYF	Display Frame
E/L	Equipment Lock
EATCS	External Active Thermal Control System
EBCS	External Berthing Camera System
ECC	Error Correction Code
ECLSS	Environmental Control and Life Support System
ECS	Environmental Control System
ECU	Electronic Control Unit
EDSU	External Data Storage Unit
EDU	EEU Driver Unit
EE	End Effector
EETCS	Early External Thermal Control System
EEU	Experiment Exchange Unit
EF	Exposed Facility
EFBM	Exposed Facility Berthing Mechanism
EFHX	Exposed Facility Heat Exchanger
EFU	Exposed Facility Unit
EGIL	Electrical, General Instrumentation, and Lighting
EIU	Ethernet Interface Unit
ELC	ExPRESS Logistics Carrier
ELM-ES	Japanese Experiment Logistics Module – Exposed Section
ELM-PS	Japanese Experiment Logistics Module – Pressurized Section

ELPS	Emergency Lighting Power Supply
EMGF	Electric Mechanical Grapple Fixture
EMI	Electro-Magnetic Imaging
EMU	Extravehicular Mobility Unit
E-ORU	EVA Essential ORU
EP	Exposed Pallet
EPS	Electrical Power System
ES	Exposed Section
ESA	European Space Agency
ESC	JEF System Controller
ESW	Extended Support Software
ET	External Tank
ETCS	External Thermal Control System
ETI	Elapsed Time Indicator
ETRS	EVA Temporary Rail Stop
ETVCG	External Television Camera Group
EV	Extravehicular
EVA	Extravehicular Activity
EXP-D	Experiment-D
EXT	External
FA	Fluid Accumulator
FAS	Flight Application Software
FCT	Flight Control Team
FD	Flight Day
FDDI	Fiber Distributed Data Interface
FDIR	Fault Detection, Isolation, and Recovery
FDS	Fire Detection System
FE	Flight Engineer
FET-SW	Field Effect Transistor Switch
FGB	Functional Cargo Block
FOR	Frame of Reference
FPMU	Floating Potential Measurement Unit
FPP	Fluid Pump Package
FR	Flight Rule
FRD	Flight Requirements Document
FRGF	Flight Releasable Grapple Fixture
FRM	Functional Redundancy Mode
FSE	Flight Support Equipment
FSEGF	Flight Support Equipment Grapple Fixture
FSW	Flight Software

GAS	Get-Away Special
GATOR	Grappling Adaptor to On-orbit Railing
GCA	Ground Control Assist
GLA	General Lighting Assemblies
	General Luminaire Assembly
GLONASS	Global Navigational Satellite System
GNC	Guidance, Navigation, and Control
GPC	General Purpose Computer
GPS	Global Positioning System
GPSR	Global Positioning System Receiver
GUI	Graphical User Interface
H&S	Health and Status
HCE	Heater Control Equipment
HCTL	Heater Controller
HEPA	High Efficiency Particulate Acquisition
HPA	High Power Amplifier
HPGT	High Pressure Gas Tank
HPP	Hard Point Plates
HRDR	High Rate Data Recorder
HREL	Hold/Release Electronics
HRFM	High Rate Frame Multiplexer
HRM	Hold Release Mechanism
HRMS	High Rate Multiplexer and Switcher
HTV	H-II Transfer Vehicle
HTVCC	HTV Control Center
HTV Prox	HTV Proximity
HX	Heat Exchanger
I/F	Interface
IAA	Intravehicular Antenna Assembly
IAC	Internal Audio Controller
IBM	International Business Machines
ICB	Inner Capture Box
ICC	Integrated Cargo Carrier
ICS	Interorbit Communication System
ICS-EF	Interorbit Communication System – Exposed Facility
IDRD	Increment Definition and Requirements Document
IELK	Individual Equipment Liner Kit
IFHX	Interface Heat Exchanger
IMCS	Integrated Mission Control System
IMCU	Image Compressor Unit

IMV	Intermodule Ventilation
INCO	Instrumentation and Communication Officer
IP	International Partner
IP-PCDU	ICS-PM Power Control and Distribution Unit
IP-PDB	Payload Power Distribution Box
ISP	International Standard Payload
ISPR	International Standard Payload Rack
ISS	International Space Station
ISSSH	International Space Station Systems Handbook
ITCS	Internal Thermal Control System
ITS	Integrated Truss Segment
IVA	Intravehicular Activity
IVSU	Internal Video Switch Unit
JAXA	Japan Aerospace Exploration Agency
JCP	JEM Control Processor
JEF	JEM Exposed Facility
JEM	Japanese Experiment Module
JEMAL	JEM Airlock
JEM-EF	Japanese Experiment Module Exposed Facility
JEM-PM	Japanese Experiment Module – Pressurized Module
JEMRMS	Japanese Experiment Module Remote Manipulator System
JEUS	Joint Expedited Undocking and Separation
JFCT	Japanese Flight Control Team
JLE	Japanese Experiment Logistics Module – Exposed Section
JLP	Japanese Experiment Logistics Module – Pressurized Section
JLP-EDU	JLP-EFU Driver Unit
JLP-EFU	JLP Exposed Facility Unit
JPM	Japanese Pressurized Module
JPM WS	JEM Pressurized Module Workstation
JSC	Johnson Space Center
JTVE	JEM Television Equipment
Kbps	Kilobit per second
KOS	Keep Out Sphere
LB	Local Bus
LCA	LAB Cradle Assembly
LCD	Liquid Crystal Display
LED	Light Emitting Diode
LEE	Latching End Effector
LMC	Lightweight MPESS Carrier

LSW	Light Switch
LTA	Launch-to-Activation
LTAB	Launch-to-Activation Box
LTL	Low Temperature Loop
MA	Main Arm
MAUI	Main Analysis of Upper-Atmospheric Injections
Mb	Megabit
Mbps	Megabit per second
MBS	Mobile Base System
MBSU	Main Bus Switching Unit
MCA	Major Constituent Analyzer
MCC	Mission Control Center
MCC-H	Mission Control Center – Houston
MCC-M	Mission Control Center – Moscow
MCDS	Multifunction Cathode-Ray Tube Display System
MCS	Mission Control System
MDA	MacDonald, Dettwiler and Associates Ltd.
MDM	Multiplexer/Demultiplexer
MDP	Management Data Processor
MELFI	Minus Eighty-Degree Laboratory Freezer for ISS
MGB	Middle Grapple Box
MIP	Mission Integration Plan
MISSE	Materials International Space Station Experiment
MKAM	Minimum Keep Alive Monitor
MLE	Middeck Locker Equivalent
MLI	Multi-layer Insulation
MLM	Multipurpose Laboratory Module
MMOD	Micrometeoroid/Orbital Debris
MOD	Modulator
MON	Television Monitor
MPC	Main Processing Controller
MPESS	Multipurpose Experiment Support Structure
MPEV	Manual Pressure Equalization Valve
MPL	Manipulator Retention Latch
MPLM	Multi-Purpose Logistics Module
MPM	Manipulator Positioning Mechanism
MPV	Manual Procedure Viewer
MSD	Mass Storage Device
MSFC	Marshall Space Flight Center
MSP	Maintenance Switch Panel

MSS	Mobile Servicing System
MT	Mobile Tracker
	Mobile Transporter
MTL	Moderate Temperature Loop
MUX	Data Multiplexer
n.mi.	nautical mile
NASA	National Aeronautics and Space Administration
NCS	Node Control Software
NET	No Earlier Than
NLT	No Less Than
NPRV	Negative Pressure Relief Valve
NSV	Network Service
NTA	Nitrogen Tank Assembly
NTSC	National Television Standard Committee
OBSS	Orbiter Boom Sensor System
OCA	Orbital Communications Adapter
OCAD	Operational Control Agreement Document
OCAS	Operator Commanded Automatic Sequence
ODF	Operations Data File
ODS	Orbiter Docking System
OI	Orbiter Interface
OIU	Orbiter Interface Unit
OMS	Orbital Maneuvering System
OODT	Onboard Operation Data Table
ORCA	Oxygen Recharge Compressor Assembly
ORU	Orbital Replacement Unit
OS	Operating System
OSA	Orbiter-based Station Avionics
OSE	Orbital Support Equipment
OTCM	ORU and Tool Changeout Mechanism
OTP	ORU and Tool Platform
P/L	Payload
PAL	Planning and Authorization Letter
PAM	Payload Attach Mechanism
PAO	Public Affairs Office
PAS	Payload Adapter System
PBA	Portable Breathing Apparatus
PCA	Pressure Control Assembly
PCBM	Passive Common Berthing Mechanism

PCN	Page Change Notice
PCS	Portable Computer System
PCU	Plasma Contactor Unit
	Power Control Unit
PDA	Payload Disconnect Assembly
PDB	Power Distribution Box
PDGF	Power and Data Grapple Fixture
PDH	Payload Data Handling unit
PDRS	Payload Deployment Retrieval System
PDU	Power Distribution Unit
PEC	Passive Experiment Container
PEHG	Payload Ethernet Hub Gateway
PFE	Portable Fire Extinguisher
PFRAM	Passive Flight Releasable Attachment Mechanism
PGSC	Payload General Support Computer
PIB	Power Interface Box
PIU	Payload Interface Unit
PLB	Payload Bay
PLBD	Payload Bay Door
PLC	Pressurized Logistics Carrier
PLT	Payload Laptop Terminal
	Space Shuttle Pilot
PM	Pressurized Module
	Pump Module
PMA	Pressurized Mating Adapter
PMCU	Power Management Control Unit
PMU	Pressurized Mating Adapter
POA	Payload ORU Accommodation
POR	Point of Resolution
PPRV	Positive Pressure Relief Valve
PRCS	Primary Reaction Control System
PREX	Procedure Executor
PRLA	Payload Retention Latch Assembly
PROX	Proximity Communications Center
psia	Pounds per Square Inch Absolute
PSP	Payload Signal Processor
PSRR	Pressurized Section Resupply Rack
PTCS	Passive Thermal Control System
PTR	Port Thermal Radiator
PTU	Pan/Tilt Unit
PVCU	Photovoltaic Controller Unit

PVM	Photovoltaic Module
PVR	Photovoltaic Radiator
PVTCS	Photovoltaic Thermal Control System
QD	Quick Disconnect
R&MA	Restraint and Mobility Aid
RACU	Russian-to-American Converter Unit
RAM	Read Access Memory
RBVM	Radiator Beam Valve Module
RCC	Range Control Center
RCT	Rack Configuration Table
RF	Radio Frequency
RGA	Rate Gyro Assemblies
RHC	Rotational Hand Controller
RIGEX	Rigidizable Inflatable Get-Away Special Experiment
RIP	Remote Interface Panel
RLF	Robotic Language File
RLT	Robotic Laptop Terminal
RMS	Remote Manipulator System
ROEU	Remotely Operated Electrical Umbilical
ROM	Read Only Memory
R-ORU	Robotics Compatible Orbital Replacement Unit
ROS	Russian Orbital Segment
RPC	Remote Power Controller
RPCM	Remote Power Controller Module
RPDA	Remote Power Distribution Assembly
RPM	Roll Pitch Maneuver
RS	Russian Segment
RSP	Return Stowage Platform
RSR	Resupply Stowage Rack
RT	Remote Terminal
RTAS	Rocketdyne Truss Attachment System
RVFS	Rendezvous Flight Software
RWS	Robotics Workstation
SAFER	Simplified Aid for EVA Rescue
SAM	SFA Airlock Attachment Mechanism
SAPA	Small Adapter Plate Assembly
SARJ	Solar Alpha Rotary Joint
SASA	S-Band Antenna Sub-Assembly
SCU	Sync and Control Unit

SD	Smoke Detector
SDS	Sample Distribution System
SEDA	Space Environment Data Acquisition equipment
SEDA-AP	Space Environment Data Acquisition equipment - Attached Payload
SELS	SpaceOps Electronic Library System
SEU	Single Event Upset
SFA	Small Fine Arm
SFAE	SFA Electronics
SI	Smoke Indicator
SLM	Structural Latch Mechanism
SLP-D	Spacelab Pallet – D
SLP-D1	Spacelab Pallet – Deployable
SLP-D2	Spacelab Pallet – D2
SLT	Station Laptop Terminal
	System Laptop Terminal
SM	Service Module
SMDP	Service Module Debris Panel
SOC	System Operation Control
SODF	Space Operations Data File
SPA	Small Payload Attachment
SPB	Survival Power Distribution Box
SPDA	Secondary Power Distribution Assembly
SPDM	Special Purpose Dexterous Manipulator
SPEC	Specialist
SRAM	Static RAM
SRB	Solid Rocket Booster
SRMS	Shuttle Remote Manipulator System
SSAS	Segment-to-Segment Attach System
SSC	Station Support Computer
SSCB	Space Station Control Board
SSE	Small Fine Arm Storage Equipment
SSIPC	Space Station Integration and Promotion Center
SSME	Space Shuttle Main Engine
SSOR	Space-to-Space Orbiter Radio
SSP	Standard Switch Panel
SSPTS	Station-to-Shuttle Power Transfer System
SSRMS	Space Station Remote Manipulator System
STC	Small Fire Arm Transportation Container
STR	Starboard Thermal Radiator
STS	Space Transfer System

STVC	SFA Television Camera
SVS	Space Vision System
TA	Thruster Assist
TAC	TCS Assembly Controller
TAC-M	TCS Assembly Controller – M
TCA	Thermal Control System Assembly
TCB	Total Capture Box
TCCS	Trace Contaminant Control System
TCCV	Temperature Control and Check Valve
TCS	Thermal Control System
TCV	Temperature Control Valve
TDK	Transportation Device Kit
TDRS	Tracking and Data Relay Satellite
THA	Tool Holder Assembly
THC	Temperature and Humidity Control Translational Hand Controller
THCU	Temperature and Humidity Control Unit
TIU	Thermal Interface Unit
TKSC	Tsukuba Space Center (Japan)
TLM	Telemetry
TMA	Russian vehicle designation
TMR	Triple Modular Redundancy
TPL	Transfer Priority List
TRRJ	Thermal Radiator Rotary Joint
TUS	Trailing Umbilical System
TVC	Television Camera
UCCAS	Unpressurized Cargo Carrier Attach System
UCM	Umbilical Connect Mechanism
UCM-E	UCM – Exposed Section Half
UCM-P	UCM – Payload Half
UHF	Ultrahigh Frequency
UIL	User Interface Language
ULC	Unpressurized Logistics Carrier
UMA	Umbilical Mating Adapter
UOP	Utility Outlet Panel
UPC	Up Converter
USA	United Space Alliance
US LAB	United States Laboratory
USOS	United States On-Orbit Segment
UTA	Utility Transfer Assembly

VAJ	Vacuum Access Jumper
VBSP	Video Baseband Signal Processor
VCU	Video Control Unit
VDS	Video Distribution System
VLU	Video Light Unit
VRA	Vent Relief Assembly
VRCS	Vernier Reaction Control System
VRCV	Vent Relief Control Valve
VRIV	Vent Relief Isolation Valve
VSU	Video Switcher Unit
VSW	Video Switcher
WAICO	Waiving and Coiling
WCL	Water Cooling Loop
WETA	Wireless Video System External Transceiver Assembly
WIF	Work Interface
WRM	Water Recovery and Management
WRS	Water Recovery System
WS	Water Separator
	Work Site
	Work Station
WVA	Water Vent Assembly
ZSR	Zero-g Stowage Rack

This page intentionally blank

MEDIA ASSISTANCE

NASA TELEVISION TRANSMISSION

NASA Television is carried on an MPEG-2 digital signal accessed via satellite AMC-6, at 72 degrees west longitude, transponder 17C, 4040 MHz, vertical polarization. For those in Alaska or Hawaii, NASA Television will be seen on AMC-7, at 137 degrees west longitude, transponder 18C, at 4060 MHz, horizontal polarization. In both instances, a Digital Video Broadcast, or DVB-compliant Integrated Receiver Decoder, or IRD, with modulation of QPSK/DBV, data rate of 36.86 and FEC 3/4 will be needed for reception. The NASA Television schedule and links to streaming video are available at:

http://www.nasa.gov/ntv

NASA TV's digital conversion will require members of the broadcast media to upgrade with an "addressable" Integrated Receiver De-coder, or IRD, to participate in live news events and interviews, media briefings and receive NASA's Video File news feeds on a dedicated Media Services channel. NASA mission coverage will air on a digital NASA Public Services "Free to Air" channel, for which only a basic IRD will be needed.

Television Schedule

A schedule of key in-orbit events and media briefings during the mission will be detailed in a NASA TV schedule posted at the link above. The schedule will be updated as necessary and will also be available at:

http://www.nasa.gov/multimedia/nasatv/mission_schedule.html

Status Reports

Status reports on launch countdown and mission progress, in-orbit activities and landing operations will be posted at:

http://www.nasa.gov/shuttle

This site also contains information on the crew and will be updated regularly with photos and video clips throughout the flight.

More Internet Information

Information on the ISS is available at:

http://www.nasa.gov/station

Information on safety enhancements made since the Columbia accident is available at:

http://www.nasa.gov/returntoflight/system/index.html

Information on other current NASA activities is available at:

http://www.nasa.gov

Resources for educators can be found at the following address:

http://education.nasa.gov

This page intentionally blank.

PUBLIC AFFAIRS CONTACTS

HEADQUARTERS
WASHINGTON, DC

Space Operations Mission Directorate

Michael Braukus
International Partners
202-358-1979
michael.j.braukus@nasa.gov

Katherine Trinidad
Shuttle, Space Station Policy
202-358-1100
katherine.trinidad@nasa.gov

John Yembrick
Shuttle, Space Station Policy
202-358-1100
john.yembrick-1@nasa.gov

Mike Curie
Shuttle, Space Station Policy
202-358-1100
michael.curie@nasa.gov

Grey Hautaluoma
Research in Space
202-358-0668
grey.hautaluoma-1@nasa.gov

Ashley Edwards
Research in Space
202-358-1756
ashley.edwards-1@nasa.gov

JOHNSON SPACE CENTER
HOUSTON, TEXAS

James Hartsfield
News Chief
281-483-5111
james.a.hartsfield@nasa.gov

Kyle Herring
Public Affairs Specialist
Space Shuttle Program Office
281-483-5111
kyle.j.herring@nasa.gov

Rob Navias
Program and Mission Operations Lead
281-483-5111
rob.navias-1@nasa.gov

Kelly Humphries
Public Affairs Specialist
International Space Station and Mission Operations Directorate
281-483-5111
kelly.o.humphries@nasa.gov

Nicole Cloutier-Lemasters
Public Affairs Specialist
Astronauts
281-483-5111
nicole.cloutier-1@nasa.gov

KENNEDY SPACE CENTER
CAPE CANAVERAL, FLORIDA

Allard Beutel
News Chief/Space Shuttle
321-867-2468
allard.beutel@nasa.gov

Tracy Young
Public Affairs Specialist
International Space Station
321-867-2468
tracy.g.young@nasa.gov

MARSHALL SPACE FLIGHT CENTER
HUNTSVILLE, ALABAMA

Dom Amatore
Public Affairs Manager
256-544-0034
dominic.a.amatore@nasa.gov

June Malone
Public Affairs Specialist
News Chief/Media Manager
256-544-0034
june.e.malone@nasa.gov

Steve Roy
Public Affairs Specialist
Space Shuttle Propulsion
256-544-0034
steven.e.roy@nasa.gov

STENNIS SPACE CENTER
BAY ST. LOUIS, MISSISSIPPI

Chris McGee
News Chief
228-688-3249
christopher.mcgee@nasa.gov

Paul Foerman
Public Affairs Officer
228-688-1880
paul.foerman-1@nasa.gov

AMES RESEARCH CENTER
MOFFETT FIELD, CALIFORNIA

Mike Mewhinney
News Chief
650-604-3937
michael.mewhinney@nasa.gov

Jonas Dino
Public Affairs Specialist
650-604-5612
jonas.dino@nasa.gov

Rachel Prucey
Public Affairs Specialist
650-604-0643
Rachel.L.Purcey@nasa.gov

Ruth Marlaire
Public Affairs Officer
650-604-4709
ruth.marlaire@nasa.gov

DRYDEN FLIGHT RESEARCH CENTER
EDWARDS, CALIFORNIA

Kevin Rohrer
Director, Public Affairs
661-276-3595
kevin.j.rohrer@nasa.gov

Alan Brown
News Chief
661-276-2665
alan.brown@nasa.gov

Leslie Williams
Public Affairs Specialist
661-276-3893
leslie.a.williams@nasa.gov

GLENN RESEARCH CENTER
CLEVELAND, OHIO

Lori Rachul
News Chief
216-433-8806
lori.j.rachul@nasa.gov

Sally Harrington
Public Affairs Specialist
216-433-2037
sally.v.harrinton@nasa.gov

Katherine Martin
Public Affairs Specialist
216-433-2406
katherine.martin@nasa.gov

LANGLEY RESEARCH CENTER
HAMPTON, VIRGINIA

Marny Skora
Head, Office of Communications
757-864-6121
marny.skora@nasa.gov

Mike Finneran
News Chief
757-864-6110
Michael.p.finneran@nasa.gov

Keith Henry
Public Affairs Officer
757-864-6120
h.k.henry@nasa.gov

Chris Rink
Public Affairs Officer
757-864-6786
christopher.p.rink@nasa.gov

Kathy Barnstorff
Public Affairs Officer
757-864-9886
katherine.a.barnstorff@nasa.gov

Amy Johnson
Public Affairs Officer
757-864-7022
amy.johnson@nasa.gov

UNITED SPACE ALLIANCE

Jessica Pieczonka
Houston Operations
281-212-6252
832-205-0480
jessica.b.pieczonka@usa-spaceops.com

Tracy Yates
Florida Operations
321-861-3956
(c) 321-750-1739
tracy.e.yates@usa-spaceops.com

BOEING

Ed Memi
Media Relations
Boeing Space Exploration
281-226-4029
edmund.g.memi@boeing.com

Adam Morgan
Boeing
International Space Station
281-226-4030
adam.k.morgan@boeing.com

JAPAN AEROSPACE EXPLORATION AGENCY (JAXA)

Naoko Matsuo
JAXA Public Affairs Representative
Houston
281-792-7468
matsuo.naoko@jaxa.jp

JAXA Public Affairs Office
Tokyo, Japan
011-81-50-3362-4374
proffice@jaxa.jp

CANADIAN SPACE AGENCY (CSA)

Jean-Pierre Arseneault
Manager, Media Relations & Information Services
514-824-0560 (cell)
jean-pierre.arseneault@space.gc.ca

Media Relations Office
Canadian Space Agency
450-926-4370

EUROPEAN SPACE AGENCY (ESA)

Clare Mattok
Communication Manager
Paris, France
011-33-1-5369-7412
clare.mattok@esa.int