National Aeronautics and Space Administration

PRESS KIT/SEPTEMBER 2009

Expedition 21 and 22
Assembling Science

www.nasa.gov

United Space Alliance

This page intentionally blank

TABLE OF CONTENTS

Section **Page**

MISSION OVERVIEW 1
EXPEDITION 21 & 22 CREW 11
EXPEDITION 21/22 MAJOR MILESTONES 23
EXPEDITION 21/22 SPACEWALKS 25
RUSSIAN SOYUZ TMA 27
- SOYUZ BOOSTER ROCKET CHARACTERISTICS 31
- PRELAUNCH COUNTDOWN TIMELINE 32
- ASCENT/INSERTION TIMELINE 33
- ORBITAL INSERTION TO DOCKING TIMELINE 34
- KEY TIMES FOR EXPEDITION 21/22 INTERNATIONAL SPACE STATION EVENTS 39
- EXPEDITION 20/SOYUZ TMA-14 LANDING 41
- SOYUZ TMA-14 ENTRY TIMELINE 44

MINI-RESEARCH MODULE 2 47
INTERNATIONAL SPACE STATION: EXPEDITION 21/22 SCIENCE OVERVIEW 53
DIGITAL NASA TELEVISION 109
EXPEDITION 21/22 PUBLIC AFFAIRS OFFICERS (PAO) CONTACTS 111

This page intentionally blank

Mission Overview

Expeditions 21 and 22

The next set of overlapping crews to live and work aboard the International Space Station will continue its evolution from orbiting outpost to multidisciplinary laboratory, activating recently delivered research facilities, integrating new supply lines and enhancing living conditions.

A total of nine long-term residents will span the Expedition 21 and 22 timeframe, welcoming 13 guests. These comings and goings are indicative of the fast-paced traffic pattern that will continue as the space station transitions from construction site to research center.

The Expedition 21 and 22 crews will be instrumental in setting up and activating new research facilities, such as the Fluids Integrated Rack and Materials Science Research Rack 1 that were delivered to the station by the STS-128 shuttle mission. They'll also activate the new Combined Operational Load-Bearing External Resistance Treadmill (COLBERT); unberth the Japanese H-II Transfer Vehicle when its supply mission is complete; and welcome a new Russian docking module, two shuttle crews and a Progress resupply ship.

Belgian astronaut Frank De Winne will become the first European Space Agency commander of the station not long after the next crew transport arrives to continue outfitting the station for an expanding research portfolio.

De Winne will take over for Commander Gennady Padalka, the Russian cosmonaut who has been station commander for the past six months, when Padalka and NASA astronaut Mike Barratt are ready to return home to Earth in early October.

By that time, the next station commander, NASA astronaut Jeff Williams, and Russian flight engineer Max Suraev, will have arrived on the station and joined De Winne, astronaut Nicole Stott, Canadian astronaut Robert Thirsk and Russian flight engineer Roman Romanenko. Those spacefarers will comprise the Expedition 21 crew.

Williams and Suraev, along with Canadian spaceflight participant Guy Laliberte, are set for launch to the space station on Sept. 30, 2009, from the Baikonur Cosmodrome in Kazakhstan aboard the Russian Soyuz TMA-16 spacecraft. Williams and Suraev will serve as Expedition 21 flight engineers until DeWinne, Romanenko and Thirsk return to Earth in November and Williams assumes command of the Expedition 22 crew.

Expedition 21 crew members take a break from training at NASA's Johnson Space Center to pose for a crew portrait. Pictured on the front row are European Space Agency astronaut Frank De Winne (center), commander; NASA astronaut Nicole Stott and Russian cosmonaut Roman Romanenko, both flight engineers. Pictured on the back row (from the left) are Russian cosmonaut Maxim Suraev, NASA astronaut Jeffrey Williams and Canadian Space Agency astronaut Robert Thirsk, all flight engineers.

Expedition 22 crew members from the left (front row) are NASA astronaut Jeffrey Williams, commander; and Russian cosmonaut Oleg Kotov, flight engineer. From the left (back row) are NASA astronaut T.J. Creamer, Russian cosmonaut Maxim Suraev and Japan Aerospace Exploration Agency (JAXA) astronaut Soichi Noguchi, all flight engineers.

Astronaut Jeffrey Williams (center), Expedition 21 flight engineer and Expedition 22 commander, participates in a 1-G Extravehicular Activity (EVA) training session in the staging area in the Neutral Buoyancy Laboratory (NBL) near NASA's Johnson Space Center. Crew trainer Ernest Bell (left) assists Williams.

The first indirect crew exchange of the program will result in Williams and Suraev being together alone for 16 days before the arrival of Russian cosmonaut and Expedition 23 commander Oleg Kotov, NASA astronaut T.J. Creamer and Japanese Aerospace Exploration Agency spaceflight veteran Soichi Noguchi. They are scheduled to launch from Baikonur in December aboard the Soyuz TMA-17 spacecraft.

De Winne, Thirsk and Romanenko will depart the station Dec. 1, in their Soyuz 19 spacecraft after 187 days in orbit. Stott will return home aboard the space shuttle Atlantis at the conclusion of the STS-129 mission, the last astronaut expected to use the shuttle for transportation to or from the station.

Japan Aerospace Exploration Agency (JAXA) astronaut Soichi Noguchi, Expedition 22/23 flight engineer, gets help in the donning of a training version of his Extravehicular Mobility Unit (EMU) spacesuit before being submerged in the waters of the Neutral Buoyancy Laboratory (NBL) near NASA's Johnson Space Center.

Williams, 51, a retired U.S. Army colonel from Winter, Wis., is making his third space flight. The West Point graduate began working with NASA in 1987 on assignment from the Army, and was selected as an astronaut in 1996. In May 2000, he served as the flight engineer and lead spacewalker on STS-101. In July 2002, he commanded a nine-day undersea coral reef expedition operating from the National Oceanic and Atmospheric Administration's Aquarius habitat off the coast of Florida. In 2006, he served as Expedition 13 flight engineer aboard the station, spending nearly 183 days in orbit. All totaled, Williams has logged more than 193 days in space, including more than19 hours on three spacewalks.

Suraev, 37, a Russian Air Force major, will be making his first space flight, commanding the Soyuz spacecraft for its launch and landing and serving as a station flight engineer. Born in Chelyabinsk, Russia, he graduated with honors from the Kachin Air Force Pilot School in 1994. That same year, he entered the Zhukovski Air Force Academy, from which he also graduated with honors in 1998, as pilot-engineer-researcher. At the pilot school he flew L-39 and Su-27 (Flanker) aircraft and has logged around 500 hours of flight time. He was selected as a test-cosmonaut candidate of the Gagarin Cosmonaut Training Center Cosmonaut Office in 1997.

NASA astronaut T.J. Creamer and Japan Aerospace Exploration Agency (JAXA) astronaut Soichi Noguchi (mostly out of frame), both Expedition 22/23 flight engineers, participate in a training session with the Vestibule Operations Trainer (VOT) in the Space Vehicle Mock-up Facility at NASA's Johnson Space Center.

Laliberte, 50, from Québec City, Canada, is the founder and chief executive officer of the entertainment troupe Cirque de Soleil. He will spend nine days on the station, flying under an agreement between the Russian Federal Space Agency and Space Adventures, Ltd.

Kotov, 43, a physician and Russian Air Force colonel, will be making his second spaceflight and serving his second tour aboard the station. Selected as a cosmonaut in 1996, he trained as a cosmonaut researcher for a flight on the Soyuz and as a backup crew member to the Mir-26 mission. A former lead test doctor at Gagarin Cosmonaut Training Center, he served as a flight engineer and Soyuz commander on the Expedition 15 mission in 2007. He will be a flight engineer for Expedition 22, and assume the duties of Expedition 23 commander when Williams departs in March 2010.

Creamer, 49, a U.S. Army colonel from Upper Marlboro, Md., will be making his first spaceflight. Assigned to NASA's Johnson Space Center in 1995 as a space shuttle vehicle integration test engineer, he supported eight shuttle missions as a vehicle integration test team lead and specialized in coordinating the information technologies for the Astronaut Office. Selected as an astronaut in 1998, Creamer worked with hardware integration and robotics, and was a support astronaut for Expedition 12.

European Space Agency (ESA) astronaut Frank De Winne, Expedition 20 flight engineer and Expedition 21 commander, and astronaut Nicole Stott, Expedition 20/21 flight engineer, participate in a HTV berthing robotics operations training session in the Avionics Systems Laboratory at NASA's Johnson Space Center.

Noguchi, 49, an aeronautical engineer from Chigasaki, Kanagawa, Japan, will be making his second spaceflight. He was selected as a National Space Development Agency of Japan (NASDA), now JAXA, as an astronaut candidate in 1996 and trained at Johnson Space Center. After completing his astronaut training, he supported development and integration of the station's Japanese Kibo experiment module. Noguchi flew on the STS-114 return-to-flight mission of Discovery in 2005. He has logged nearly 14 days in space, including more than 20 hours of spacewalks to test new procedures for shuttle inspection and repair techniques.

The Expedition 21 and 22 crews will work with experiments across a variety of fields, including human life sciences, physical sciences and Earth observation, and conduct technology demonstrations. As with prior expeditions, many experiments are designed to gather information about the effects of long-duration spaceflight on the human body, which will help with planning future exploration missions to the moon and Mars.

They also will activate the new COLBERT treadmill for scientific exercise program development and relocate it to the U.S. Tranquility module after its arrival on the shuttle Endeavour in February 2010.

Padalka and Barratt, joined by Laliberte, will undock and return home to Earth after nine days of handover activities, landing in Kazakhstan on Oct. 11, 2009. The Russian Progress 35 spacecraft will launch from Baikonur on Oct. 15, and arrive at the station's Pirs docking port on Oct. 17, bringing two tons of food, fuel, air and supplies.

Expedition 23 commander, Oleg Kotov; and Japan Aerospace Exploration Agency (JAXA) astronaut Soichi Noguchi (left), Expedition 22/23 flight engineer, participate in a training session in an International Space Station mock-up/trainer in the Space Vehicle Mock-up Facility at NASA's Johnson Space Center.

The newest Russian module to be added to the station will launch from Baikonur on Nov. 10 atop a Soyuz rocket and dock with to the Zvezda service module's space-facing port on Nov. 12.

The shuttle Discovery is scheduled to launch from Kennedy Space Center, Fla., on Nov. 12, and dock with the station on Nov. 14. The STS-129 Utilization and Logistics Flight-3 crew will deliver two Express Logistics Carriers, additional equipment and supplies for use inside the station and conduct three spacewalks. The spacewalkers will install two new materials exposure experiments and a new high-pressure gas tank and position additional external spare parts. Discovery is scheduled to spend seven days at the station before undocking, bringing Stott home after more than 100 days on orbit.

The Soyuz 21 craft commanded by Kotov will launch from Baikonur on Dec. 21, and deliver him, Creamer and Noguchi to the station, with docking to the Zarya control module's Earth-facing port.

There are no U.S.-based spacewalks currently scheduled for Expedition 21 or 22. However, Suraev and Kotov will don Russian Orlan spacesuits in January for the station's 24th Russian spacewalk. It will be Kotov's third spacewalk and Suraev's first.

The focus of the spacewalk will be the Russian segment's Mini-Research Module 2 (MRM2), which is scheduled to dock to the station in November and will provide an additional docking port and airlock on the station. Kotov and Suraev will be preparing the module by installing a docking target on its exterior and connecting an antenna that will be used to guide approaching vehicles to the larger antenna system on the Zvezda service module. They'll also lay cables to connect the module to the station's Ethernet system and install handrails on the hatches that will be used for spacewalks.

Russian cosmonaut Oleg Kotov (foreground), Expedition 22 flight engineer and Expedition 23 commander, along with NASA astronaut T.J. Creamer (center) and Japan Aerospace Exploration Agency (JAXA) astronaut Soichi Noguchi, both Expedition 22/23 flight engineers, participate in a training session in an International Space Station mock-up/trainer in the Space Vehicle Mock-up Facility at NASA's Johnson Space Center.

Williams and Suraev are scheduled to relocate their Soyuz to the newly connected MRM2 in January, making room at Zvezda's aft port for the Progress 36 cargo vehicle in February.

During three months together as a crew of five, Williams, Suraev, Kotov, Creamer and Noguchi will continue station research and outfitting activities, using Canadarm2 to move Pressurized Mating Adapter 3 from its current location on the port side of the Harmony module to Harmony's Earth-facing common berthing mechanism port, and transferring External Stowage Platform 3 to the opposite side of the station's truss structure. They'll also complete unloading of the HTV cargo vehicle, load it with refuse, and, using Canadarm2, unberth it from the station and set it adrift so that flight controllers in Japan can command it to reenter the Earth's atmosphere and be destroyed.

Noguchi and Creamer also will assemble and check out the new JAXA Small Fine Arm (SFA) and install the Kibo airlock's depressurization pump, which will allow experiments to be installed and tested on the Kibo "back porch," also known as the Japanese External Facility (JEF).

The Small Fine Arm will be used to manipulate experiments on the JEF. Based on robot arm technologies and operation experience from the Manipulator Flight Demonstration conducted on STS-85 in 1997, the SFA includes a 5-foot-long arm with six joints, a tool mechanism and a camera. It was designed so that it could pass through the Kibo airlock for repair and maintenance inside Kibo.

In January, one of the station's new commercial resupply rockets, built by Space Exploration Technologies Corp. (SpaceX), will make its first

demonstration flight. The station crew will not be involved in the mission, but it will mark an important milestone in providing additional supply lines for the station.

Also during this period, another Progress resupply exchange is planned. Progress 35 is scheduled to undock from the Pirs docking compartment on Feb. 2. The next Russian cargo shot, Progress 37, will launch from Baikonur and dock with the aft Zvezda port in April.

Another shuttle mission in February, STS-130, will deliver the final pressurized U.S. module, Tranquility, and its seven-window cupola. Tranquility will be installed on the newly vacated port berthing mechanism, and spacewalkers will connects its external utilities over the course of three spacewalks.

The shuttle and station crews will work together to integrate regenerative life support systems into the new Tranquility module, which will become the station's utility and exercise room. They will move the Air Revitalization System and its carbon dioxide removal equipment, the Waste and Hygiene Compartment toilet system, the Water Recovery System, the Oxygen Generation System, the Advanced Resistive Exercise Device, the COLBERT treadmill and a crew quarters rack into the newly arrived Tranquility module, freeing up much needed research space in the Destiny Laboratory.

Expedition 21 and 22 crews during Emergency Scene 6 crew training in space station mockups.

Williams will hand over command of the station to Kotov, and then he and Suraev will depart the station in their Soyuz, with landing in Kazakhstan set for March 18, 2010.

The next expedition crew members are set to arrive at the station in early April.

Expedition 21 & 22 Crew

Expedition 21

Expedition 21 Patch

The central element of the patch is inspired by a fractal of six, symbolizing the teamwork of the six-person crew. From the basic element of one person, together six people form a much more complex and multifaceted entity, toward the infinity of the universe. The patch shows children, on Earth in the bright sun, as our future and the reason we explore. The Soyuz and shuttle are the vehicles that enable human space exploration today, while the International Space Station is leading to our next goals, the moon and Mars. The patch shape has six tips, geometrically sound yet reminiscent of a leaf, representing symmetry and ecological harmony, and the six stars in deep space represent the current crew and future exploration crews.

Expedition 22

Expedition 22 Patch

The 22nd Expedition to the International Space Station is dedicated to the final stages of assembly and the transition to full use as an orbiting laboratory. The sun, providing power and life support to the space station, shines through one of the solar arrays as the station orbits above Earth. The oceans and atmosphere, providing life support to Earth, are shown in all their beauty. The moon hovers in the distance as the goal of the next era of exploration. The six stars illustrate the increased capability of the crew complement. In the border are the national flags of the crew members, as well as their surnames in their native languages.

Frank De Winne

European Space Agency (ESA) astronaut Frank De Winne will serve as the International Space Station commander of Expedition 21 after serving as a flight engineer on Expedition 20. He will be the first ESA astronaut to command the station. He served as the flight engineer-1 on Soyuz TMA-15 that launched on May 27, 2009, and has been on board the station since docking on May 29, 2009.

Born in Ghent, Belgium, De Winne received a master's degree in telecommunications and civil engineering from the Royal Military Academy, Brussels, in 1984 and, in 1992, graduated from the Empire Test Pilots School in Boscombe Down, England. Since then, De Winne has logged more than 2,300 hours of flight time in several types of high-performance aircraft including Mirage, F16, Jaguar and Tornado.

De Winne joined the ESA Astronaut Corps in 2000 and two years later flew on a Soyuz to the space station as part of the Odissea mission. During his nine-day stay, he carried out 23 experiments in the fields of life and physical sciences and education.

Roman Romanenko

Cosmonaut Roman Romanenko, a lieutenant colonel in the Russian Air Force, will serve as a flight engineer on Expedition 21, after serving on Expedition 20. He was the commander of the Soyuz TMA-15 that launched on May 27, 2009. He has been on board the space station since docking on May 29, 2009.

Born in the Schelkovo, Moscow Region, Romanenko graduated from pilot school and then served as a second commander in the Air Force. He flew L-39 and Tu-134 aircraft, logging more than 500 hours of flight time. In December 1997, he was selected as a test-cosmonaut candidate of the Gagarin Cosmonaut Training Center Cosmonaut Office. From January 1998 to November 1999, Romanenko completed his basic training course and then qualified as a test-cosmonaut.

Robert Thirsk

Canadian Space Agency (CSA) astronaut Robert Thirsk will serve as a flight engineer on Expedition 21, after serving on Expedition 20. He served as flight engineer-2 on Soyuz TMA-15 that launched on May 27, 2009. He has been on board the space station since docking on May 29, 2009.

Born in New Westminster, British Columbia, Thirsk holds engineering degrees from the University of Calgary and MIT, an MBA from MIT, and a medical degree from McGill University. In December 1983, he was selected to the CSA astronaut program and has been involved in various CSA projects including parabolic flight campaigns and mission planning. He served as a crew commander for two space mission simulations: the seven-day CAPSULS mission in 1994 at Defense Research and Development Canada in Toronto; and the 11-day NASA Extreme Environment Mission Operations 7 (NEEMO 7) undersea mission in 2004 at the National Undersea Research Center in Key Largo, Fla.

In 1996, Thirsk flew as a payload specialist aboard space shuttle mission STS-78, the Life and Microgravity Spacelab mission. During the 17-day flight aboard shuttle Columbia, he and his six crewmates performed 43 international experiments devoted to the study of life and materials sciences.

Nicole Stott

NASA astronaut Nicole Stott will serve as a flight engineer on Expedition 21 after serving on Expedition 20 since Aug. 30, 2009. She launched on board the space shuttle Discovery on the STS-128 mission on Aug. 28, 2009, and joined the Expedition 20 crew, replacing NASA astronaut Tim Kopra. She will return to Earth on board STS-129 in November 2009.

Born in Albany, N.Y., Stott has degrees from Embry-Riddle University and the University of Central Florida. She joined NASA's Kennedy Space Center in 1988 as an operations engineer in the Orbiter Processing Facility before being promoted to vehicle flow director for Endeavour and orbiter test engineer for Columbia. During her last two years at Kennedy, Stott served as the NASA project lead for the space station truss elements under construction at the Boeing Space Station Facility.

In 1998, she joined NASA's Johnson Space Center team in Houston as a member of the NASA Aircraft Operations Division, where she served as a flight simulation engineer on the Shuttle Training Aircraft. She was selected as a NASA astronaut in July 2000 and, after initial training, was assigned to the Astronaut Office Station Operations Branch, where she performed crew evaluations of station payloads. She also worked as a support astronaut and capsule communicator for the space station Expedition 10 crew. In April 2006, she was a crew member on the NASA Extreme Environment Mission Operations, or NEEMO, 9 mission. She lived and worked with a six-person crew for 18 days on the Aquarius undersea research habitat.

Jeffrey Williams

NASA astronaut Jeffrey Williams, a retired U.S. Army colonel, will serve as a flight engineer on Expedition 21 and then as commander of Expedition 22. He will serve as flight engineer-1 on Soyuz TMA-16 scheduled to launch on Sept. 30, 2009. He will remain on board the space station after docking on Oct. 2, 2009, until the planned Soyuz landing in Kazakhstan on March 18, 2010.

Born in Superior Wis., Williams has degrees from the U.S. Military Academy, the Naval Postgraduate School and the Naval War College. Williams began his NASA experience on an Army assignment at NASA's Johnson Space Center in Houston from 1987 to 1992. He served as a shuttle launch and landing operations engineer, a pilot in the Shuttle Avionics Integration Laboratory and chief of the Operations Development Office, Flight Crew Operations Directorate. Williams attended the U.S. Naval Test Pilot School in 1992 and worked as an experimental test pilot at Edwards Air Force Base in California. He was selected by NASA in the 1996 Astronaut Class. Since his selection, he has completed assignments working on the final assembly of the U.S. Laboratory Module at NASA's Marshall Space Flight Center in Huntsville, Ala., co-chairing the space shuttle cockpit avionics upgrade development, commanding the 9-day NEEMO-3 mission on the Aquarius undersea research habitat, and supporting legislative affairs in Washington, D.C.

In May 2000, he served as the flight engineer and lead spacewalker on STS-101 and, in 1996, as the flight engineer for Expedition 13. Williams has logged more than 193 days in space, more than 19 hours of spacewalking time in both U.S. and Russian suits, and more than 2,500 hours in more than 50 different aircraft.

Maxim Suraev

Cosmonaut Maxim Suraev, a colonel in the Russian Air Force, will serve as a flight engineer on Expeditions 21 and 22. He will serve as the commander of Soyuz TMA-16 scheduled to launch on Sept. 30, 2009. He will remain on board the space station after docking on Oct. 2, 2009, until the planned Soyuz landing in Kazakhstan on March 18, 2010.

Born in Chelyabinsk, Russia, Suraev graduated with honors from the Kachin Air Force Pilot School as pilot-fighter in 1994. That same year, Suraev entered the Zhukovski Air Force Academy from which he also graduated with honors, in 1998, as pilot-engineer-researcher. At the pilot school he flew L-39 and Su-27 (Flanker) aircraft and has logged about 500 hours of flight time. He was selected as a test-cosmonaut candidate of the Gagarin Cosmonaut Training Center Cosmonaut Office in 1997.

Oleg Kotov

Cosmonaut Oleg Kotov, a colonel in the Russian Air Force, will serve as a flight engineer on Expedition 22 and then as commander of Expedition 23. He will serve as the commander of Soyuz TMA-17 scheduled to launch in December 2009. He will remain on board the space station until a planned Soyuz landing in Kazakhstan in May 2010.

Born in Simferopol, Russia, Kotov entered the Kirov Military Medical Academy from which he graduated in 1988. He served at the Gagarin Cosmonaut Training Center where he held the positions of deputy lead test-doctor and lead test-doctor. Kotov was selected as a cosmonaut candidate by GCTC in 1996. From June 1996 to March 1998, he completed a course of basic training for spaceflight. In March 1998, he received a test-cosmonaut qualification. Since July 1998, Kotov has been a cosmonaut-researcher and test-cosmonaut of the GCTC Cosmonaut Office. He began advanced training, in October 1998, for space station flights. During 2001 and 2002 he worked as a CAPCOM for Expeditions 3 and 4. In 2004, he became chief of the CAPCOM Branch in the Cosmonaut Office.

In 2007, Kotov served as a flight engineer on Expedition 15 and as the commander of Soyuz TMA-10. He has logged nearly 197 days in space and 5 hours, 25 minutes of spacewalking time.

Soichi Noguchi

Japan Aerospace Exploration Agency astronaut Soichi Noguchi will serve as a flight engineer on Expeditions 22 and 23. He also will serve as flight engineer-1 on Soyuz TMA-17 scheduled to launch in December 2009. He will remain on board the space station until a planned Soyuz landing in Kazakhstan in May 2010.

Born in Yokohama, Kanagawa, Japan, Noguchi has degrees from the University of Tokyo and holds a flight instructor certificate as CFII and MEI. He is a member of the Japan Society for Aeronautical and Space Sciences. Noguchi was selected by the National Space Development Agency of Japan (NASDA) in June 1996.

Noguchi reported to the Johnson Space Center in August 1996. Having completed two years of training and evaluation, he is qualified for flight assignment as a mission specialist. He participated in the basic training course for Russian human space systems at the Gagarin Cosmonaut Training Center in Russia in 1998.

In 2005, Noguchi flew aboard space shuttle Discovery on STS-114, the return-to-flight mission. During that flight, the shuttle docked with the space station, and the crew tested and evaluated new procedures for flight safety and shuttle inspection and repair techniques. Noguchi has logged more than 333 hours in space and more than 20 hours of spacewalking time.

Timothy Creamer

NASA astronaut Timothy "TJ" Creamer, a colonel in the U.S. Army, will serve as a flight engineer on Expeditions 22 and 23, and as the flight engineer-2 on Soyuz TMA-17 scheduled to launch in December 2009. He will remain on board the space station until a planned Soyuz landing in Kazakhstan in May 2010.

Born in Ft. Huachuca, Ariz., Creamer entered the U.S. Army Aviation School in December 1982, and was designated as an Army aviator in August 1983, graduating as the distinguished graduate from his class. He is currently the Army's NASA detachment commander. Creamer has degrees from Loyola College and MIT.

Creamer was assigned to NASA at the Johnson Space Center, in July 1995, as a space shuttle vehicle integration test engineer. He has directly supported eight shuttle missions as a vehicle integration test team lead. Creamer was selected as a NASA astronaut in June 1998. Beginning in November 2000, he became the crew support astronaut for the Expedition 3 crew. In March 2002, he headed the Hardware Integration Section of the Space Station Branch, responsible for ensuring all hardware configurations were properly integrated and that all operational aspects of the future station hardware are accounted for. He was the real-time support lead for Expedition 12 for robotics operations on the space station.

This page intentionally blank

Expedition 21/22 Major Milestones

(Dates are subject to change)

2009:

Sept. 30	Launch of the Expedition 21/22 crew (Williams, Suraev) and Canadian spaceflight participant (Laliberte) from the Baikonur Cosmodrome, Kazakhstan, on Soyuz TMA-16
Oct. 2	Expedition 21 docks to the International Space Station's Zvezda Service Module aft port in Soyuz TMA-16 with Canadian space-flight participant
Oct. 11	Undocking of Expedition 20 crew (Padalka and Barratt) and Canadian spaceflight participant (Laliberte) from Pirs Docking Compartment and landing in Kazakhstan on Soyuz TMA-14; Expedition 21 formally begins with De Winne as ISS Commander
Oct. 17	Docking of the ISS Progress 35 cargo ship to the Pirs Docking Compartment
Oct. 30	Undocking of Japanese HTV from the Earth-facing port of the Harmony node
Nov. 10	Mini-Research Module 2 (MRM2) launches from the Baikonur Cosmodrome, Kazakhstan, on a Russian Soyuz
Nov. 12	MRM2 docks to the zenith port of the Zvezda Service Module's transfer compartment; launch of Atlantis on the STS-129/ULF3 mission from the Kennedy Space Center
Nov. 14	Docking of Atlantis to ISS Pressurized Mating Adapter-2 (PMA-2); Stott becomes an STS-129 crew member
Nov. 21	Undocking of Atlantis from ISS PMA-2
Nov. 23	Landing of Atlantis to complete STS-129/ULF3
Dec. 1	Undocking of Expedition 20 crew (De Winne, Thirsk, Romanenko) from Zarya module and landing in Kazakhstan on Soyuz TMA-15; Expedition 22 formally begins with Williams as ISS Commander (ISS temporarily occupied by crew of two, Williams and Suraev)
Dec. 7	Launch of the Expedition 22/23 crew (Kotov, Noguchi, Creamer) from the Baikonur Cosmodrome in Kazakhstan on Soyuz TMA-17
Dec. 9	Docking of the Expedition 22/23 crew and Soyuz TMA-17 to the Zarya module; ISS increases in size to five crew members

2010:

January	Russian spacewalk by Suraev and Kotov in Orlan suits to outfit the new MRM2 and retrieve science hardware
January	Relocation of Soyuz TMA-16 to from the Zvezda Service Module aft port to the new MRM2
Jan. 5	Relocation of Pressurized Mating Adapter-3 (PMA3) to the Unity node's Earth-facing port in preparation for the arrival of the Tranquility node
Jan. 12	Relocation of External Stowage Platform-3 (ESP3) to the S3 truss segment
Feb. 2	Undocking of ISS Progress 35 from the Pirs Docking Compartment
Feb. 3	Launch of the ISS Progress 36 cargo ship from the Baikonur Cosmodrome in Kazakshtan
Feb. 4	Targeted launch of Endeavour on the STS-130/20A mission from the Kennedy Space Center
Feb. 5	Docking of the ISS Progress 36 cargo ship to the Zvezda Service Module's aft port
Feb. 6	Docking of Endeavour to ISS PMA-2
Feb. 13	Undocking of Endeavour from ISS PMA-2
Feb. 16	Landing of Endeavour to complete STS-130/20A
March 18	Undocking of Expedition 22 crew (Williams, Suraev) from MRM2 and landing in Kazakhstan on Soyuz TMA-16; Expedition 23 formally begins with Kotov as ISS Commander; ISS temporarily manned by crew of three; launch of Discovery on the STS-131/19A mission from the Kennedy Space Center
March 20	Docking of Discovery to ISS Pressurized Mating Adapter-2 (PMA-2)
March 29	Undocking of Discovery from ISS PMA-2
March 31	Landing of Discovery to complete STS-131/19A

Expedition 21/22 Spacewalks

There are no U.S.-based spacewalks currently scheduled for Expedition 21 or 22. However, Russian Flight Engineers Maxim Suraev and Oleg Kotov will don Russian Orlan spacesuits in January 2010 for the station's 24th Russian spacewalk out of the Pirs Docking Compartment. It will be Kotov's third spacewalk and Suraev's first.

The focus of the spacewalk will be the outfitting of the Russian segment's new Mini-Research Module 2 (MRM2), which is scheduled to dock to the station in November after its launch from the Baikonur Cosmodrome in Kazakhstan to provide a new docking port on the station and also be used as an airlock for spacewalks. It will replace Pirs, which will eventually be undocked and deorbited.

Kotov and Suraev will prepare the module for dockings by installing a docking target on its exterior and connecting an antenna that will be used to guide approaching vehicles to the station including to the larger antenna system on the Zvezda service module. They'll also lay cables to connect the module to the station's Ethernet system and install handrails on the hatches that will be used for spacewalks.

The only non-Mini Research Module related tasks scheduled for the spacewalk will be the removal of a Russian experiment container from the station's exterior. The container is part of the Biorisk experiment, which studies the effects of microgravity on microbial bacteria and fungus on structural materials. The data will be used in future spacecraft design, taking into account how solar activity affects the growth of the microbes.

This page intentionally blank

Russian Soyuz TMA

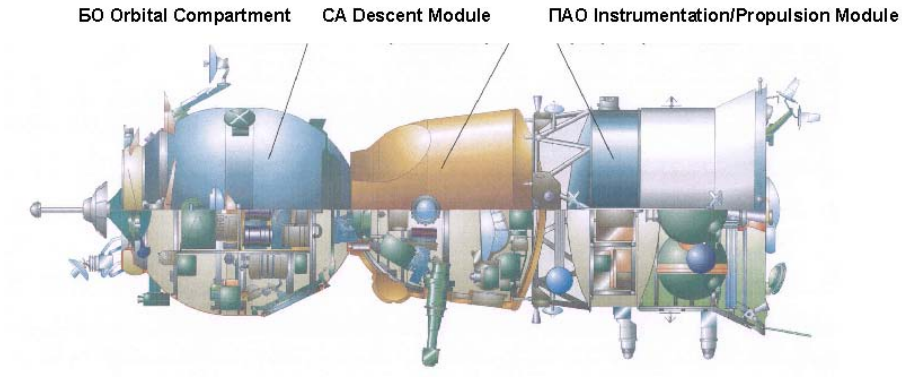

The Soyuz TMA spacecraft is designed to serve as the ISS's crew return vehicle, acting as a lifeboat in the unlikely event an emergency would require the crew to leave the station. A new Soyuz capsule is normally delivered to the station by a Soyuz crew every six months, replacing an older Soyuz capsule at the ISS.

The Soyuz spacecraft is launched to the space station from the Baikonur Cosmodrome in Kazakhstan aboard a Soyuz rocket. It consists of an orbital module, a descent module and an instrumentation/propulsion module.

Orbital Module

This portion of the Soyuz spacecraft is used by the crew while on orbit during free-flight. It has a volume of 6.5 cubic meters (230 cubic feet), with a docking mechanism, hatch and rendezvous antennas located at the front end. The docking mechanism is used to dock with the space station and the hatch allows entry into the station. The rendezvous antennas are used by the automated docking system – a radar-based system – to maneuver towards the station for docking. There is also a window in the module.

The opposite end of the orbital module connects to the descent module via a pressurized hatch. Before returning to Earth, the orbital module separates from the descent module – after the deorbit maneuver – and burns up upon re-entry into the atmosphere.

Descent Module

The descent module is where the cosmonauts and astronauts sit for launch, re-entry and landing. All the necessary controls and displays of the Soyuz are here. The module also contains life support supplies and batteries used during descent, as well as the primary and backup parachutes and landing rockets. It also contains custom-fitted seat liners for each crew member, individually molded to fit each person's body – this ensures a tight, comfortable fit when the module lands on the Earth. When crew members are brought to the station aboard the space shuttle, their seat liners are brought with them and transferred to the Soyuz spacecraft as part of crew handover activities.

The module has a periscope, which allows the crew to view the docking target on the station or the Earth below. The eight hydrogen peroxide thrusters located on the module are used to control the spacecraft's orientation, or attitude, during the descent until parachute deployment. It also has a guidance, navigation and control system to maneuver the vehicle during the descent phase of the mission.

This module weighs 2,900 kilograms (6,393 pounds), with a habitable volume of 4 cubic meters (141 cubic feet). Approximately 50 kilograms (110 pounds) of payload can be returned to Earth in this module and up to 150 kilograms (331 pounds) if only two crew members are present. The Descent Module is the only portion of the Soyuz that survives the return to Earth.

Instrumentation/Propulsion Module

This module contains three compartments: intermediate, instrumentation and propulsion.

The intermediate compartment is where the module connects to the descent module. It also contains oxygen storage tanks and the attitude control thrusters, as well as electronics, communications and control equipment. The primary guidance, navigation, control and computer systems of the Soyuz are in the instrumentation compartment, which is a sealed container filled with circulating nitrogen gas to cool the avionics equipment. The propulsion compartment contains the primary thermal control system and the Soyuz radiator, with a cooling area of 8 square meters (86 square feet). The propulsion system, batteries, solar arrays, radiator and structural connection to the Soyuz launch rocket are located in this compartment.

The propulsion compartment contains the system that is used to perform any maneuvers while in orbit, including rendezvous and docking with the space station and the deorbit burns necessary to return to Earth. The propellants are nitrogen tetroxide and unsymmetric-dimethylhydrazine. The main propulsion system and the smaller reaction control system, used for attitude changes while in space, share the same propellant tanks.

The two Soyuz solar arrays are attached to either side of the rear section of the instrumentation/propulsion module and are linked to rechargeable batteries. Like the orbital module, the intermediate section of the instrumentation/propulsion module separates from the descent module after the final deorbit maneuver and burns up in atmosphere upon re-entry.

TMA Improvements and Testing

The Soyuz TMA spacecraft is a replacement for the Soyuz TM, which was used from 1986 to 2002 to take astronauts and cosmonauts to Mir and then to the International Space Station.

The TMA increases safety, especially in descent and landing. It has smaller and more efficient computers and improved displays. In addition, the Soyuz TMA accommodates individuals as large as 1.9 meters (6 feet, 3 inches) tall and 95 kilograms (209 pounds), compared to 1.8 meters (6 feet) and 85 kilograms (187 pounds) in the earlier TM. Minimum crew member size for the TMA is 1.5 meters (4 feet, 11 inches) and 50 kilograms (110 pounds), compared to 1.6 meters (5 feet, 4 inches) and 56 kilograms (123 pounds) for the TM.

Two new engines reduce landing speed and forces felt by crew members by 15 to 30 percent and a new entry control system and three-axis accelerometer increase landing accuracy. Instrumentation improvements include a color “glass cockpit,” which is easier to use and gives the crew more information, with hand controllers that can be secured under an instrument panel. All the new components in the Soyuz TMA can spend up to one year in space.

New components and the entire TMA were rigorously tested on the ground, in hangar-drop tests, in airdrop tests and in space before the spacecraft was declared flight-ready. For example, the accelerometer and associated software, as well as modified boosters (incorporated to cope with the TMA’s additional mass), were tested on flights of Progress unpiloted supply spacecraft, while the new

cooling system was tested on two Soyuz TM flights.

Descent module structural modifications, seats and seat shock absorbers were tested in hangar drop tests. Landing system modifications, including associated software upgrades, were tested in a series of airdrop tests. Additionally, extensive tests of systems and components were conducted on the ground.

Soyuz Launcher

Throughout history, more than 1,500 launches have been made with Soyuz launchers to orbit satellites for telecommunications, Earth observation, weather, and scientific missions, as well as for human flights.

The basic Soyuz vehicle is considered a three-stage launcher in Russian terms and is composed of:

- A lower portion consisting of four boosters (first stage) and a central core (second stage).
- An upper portion, consisting of the third stage, payload adapter and payload fairing.
- Liquid oxygen and kerosene are used as propellants in all three Soyuz stages.

First Stage Boosters

The first stage's four boosters are assembled around the second stage central core. The boosters are identical and cylindrical-conic in shape with the oxygen tank in the cone-shaped portion and the kerosene tank in the cylindrical portion.

An NPO Energomash RD 107 engine with four main chambers and two gimbaled vernier thrusters is used in each booster. The vernier thrusters provide three-axis flight control.

Ignition of the first stage boosters and the second stage central core occur simultaneously on the ground. When the boosters have completed their powered flight during ascent, they are separated and the core second stage continues to function.

First stage separation occurs when the pre-defined velocity is reached, which is about 118 seconds after liftoff.

A Soyuz launches from the Baikonur Cosmodrome, Kazakhstan.

Second Stage

An NPO Energomash RD 108 engine powers the Soyuz second stage. This engine has four vernier thrusters, necessary for three-axis flight control after the first stage boosters have separated.

An equipment bay located atop the second stage operates during the entire flight of the first and second stages.

Third Stage

The third stage is linked to the Soyuz second stage by a latticework structure. When the second stage's powered flight is complete, the third stage engine is ignited. Separation occurs by the direct ignition forces of the third stage engine.

A single-turbopump RD 0110 engine from KB KhA powers the Soyuz third stage.

The third stage engine is fired for about 240 seconds. Cutoff occurs at a calculated velocity. After cutoff and separation, the third stage performs an avoidance maneuver by opening an outgassing valve in the liquid oxygen tank.

Launcher Telemetry Tracking & Flight Safety Systems

Soyuz launcher tracking and telemetry is provided through systems in the second and third stages. These two stages have their own radar transponders for ground tracking. Individual telemetry transmitters are in each stage. Launcher health status is downlinked to ground stations along the flight path. Telemetry and tracking data are transmitted to the mission control center, where the incoming data flow is recorded. Partial real-time data processing and plotting is performed for flight following and initial performance assessment. All flight data is analyzed and documented within a few hours after launch.

Baikonur Cosmodrome Launch Operations

Soyuz missions use the Baikonur Cosmodrome's proven infrastructure, and launches are performed by trained personnel with extensive operational experience.

Baikonur Cosmodrome is in the Republic of Kazakhstan in Central Asia between 45 degrees and 46 degrees north latitude and 63 degrees east longitude. Two launch pads are dedicated to Soyuz missions.

Final Launch Preparations

The assembled launch vehicle is moved to the launch pad on a railcar. Transfer to the launch zone occurs two days before launch. The vehicle is erected and a launch rehearsal is performed that includes activation of all electrical and mechanical equipment.

On launch day, the vehicle is loaded with propellant and the final countdown sequence is started at three hours before the liftoff time.

Rendezvous to Docking

A Soyuz spacecraft generally takes two days to reach the space station. The rendezvous and docking are both automated, though once the spacecraft is within 150 meters (492 feet) of the station, the Russian Mission Control Center just outside Moscow monitors the approach and docking. The Soyuz crew has the capability to manually intervene or execute these operations.

Soyuz Booster Rocket Characteristics

First Stage Data - Blocks B, V, G, D	
Engine	RD-107
Propellants	LOX/Kerosene
Thrust (tons)	102
Burn time (sec)	122
Specific impulse	314
Length (meters)	19.8
Diameter (meters)	2.68
Dry mass (tons)	3.45
Propellant mass (tons)	39.63
Second Stage Data, Block A	
Engine	RD-108
Propellants	LOX/Kerosene
Thrust (tons)	96
Burn time (sec)	314
Specific impulse	315
Length (meters)	28.75
Diameter (meters)	2.95
Dry mass (tons)	6.51
Propellant mass (tons)	95.7
Third Stage Data, Block I	
Engine	RD-461
Propellants	LOX/Kerosene
Thrust (tons)	30
Burn time (sec)	240
Specific impulse	330
Length (meters)	8.1
Diameter (meters)	2.66
Dry mass (tons)	2.4
Propellant mass (tons)	21.3
PAYLOAD MASS (tons)	6.8
SHROUD MASS (tons)	4.5
LAUNCH MASS (tons)	309.53
TOTAL LENGTH (meters)	49.3

Prelaunch Countdown Timeline

T- 34 Hours	Booster is prepared for fuel loading
T- 6:00:00	Batteries are installed in booster
T- 5:30:00	State commission gives go to take launch vehicle
T- 5:15:00	Crew arrives at site 254
T- 5:00:00	Tanking begins
T- 4:20:00	Spacesuit donning
T- 4:00:00	Booster is loaded with liquid oxygen
T- 3:40:00	Crew meets delegations
T- 3:10:00	Reports to the State commission
T- 3:05:00	Transfer to the launch pad
T- 3:00:00	Vehicle 1st and 2nd stage oxidizer fueling complete
T- 2:35:00	Crew arrives at launch vehicle
T- 2:30:00	Crew ingress through orbital module side hatch
T- 2:00:00	Crew in re-entry vehicle
T- 1:45:00	Re-entry vehicle hardware tested; suits are ventilated
T- 1:30:00	Launch command monitoring and supply unit prepared
	Orbital compartment hatch tested for sealing
T- 1:00:00	Launch vehicle control system prepared for use; gyro instruments activated
T - :45:00	Launch pad service structure halves are lowered
T- :40:00	Re-entry vehicle hardware testing complete; leak checks performed on suits
T- :30:00	Emergency escape system armed; launch command supply unit activated
T- :25:00	Service towers withdrawn
T- :15:00	Suit leak tests complete; crew engages personal escape hardware auto mode
T- :10:00	Launch gyro instruments uncaged; crew activates on-board recorders
T- 7:00	All prelaunch operations are complete
T- 6:15	Key to launch command given at the launch site
	Automatic program of final launch operations is activated
T- 6:00	All launch complex and vehicle systems ready for launch
T- 5:00	Onboard systems switched to onboard control
	Ground measurement system activated by RUN 1 command
	Commander's controls activated
	Crew switches to suit air by closing helmets
	Launch key inserted in launch bunker
T- 3:15	Combustion chambers of side and central engine pods purged with nitrogen

Prelaunch Countdown Timeline (concluded)

T- 2:30	Booster propellant tank pressurization starts
	Onboard measurement system activated by RUN 2 command
	Prelaunch pressurization of all tanks with nitrogen begins
T- 2:15	Oxidizer and fuel drain and safety valves of launch vehicle are closed
	Ground filling of oxidizer and nitrogen to the launch vehicle is terminated
T- 1:00	Vehicle on internal power
	Automatic sequencer on
	First umbilical tower separates from booster
T- :40	Ground power supply umbilical to third stage is disconnected
T- :20	Launch command given at the launch position
	Central and side pod engines are turned on
T- :15	Second umbilical tower separates from booster
T- :10	Engine turbopumps at flight speed
T- :05	First stage engines at maximum thrust
T- :00	Fueling tower separates
	Lift off

Ascent/Insertion Timeline

T- :00	Lift off
T+ 1:10	Booster velocity is 1,640 ft/sec
T+ 1:58	Stage 1 (strap-on boosters) separation
T+ 2:00	Booster velocity is 4,921 ft/sec
T+ 2:40	Escape tower and launch shroud jettison
T+ 4:58	Core booster separates at 105.65 statute miles
	Third stage ignites
T+ 7:30	Velocity is 19,685 ft/sec
T+ 9:00	Third stage cut-off
	Soyuz separates
	Antennas and solar panels deploy
	Flight control switches to Mission Control, Korolev

Orbital Insertion to Docking Timeline

FLIGHT DAY 1 OVERVIEW	
Orbit 1	**Post insertion: Deployment of solar panels, antennas and docking probe**
	- Crew monitors all deployments
	- Crew reports on pressurization of OMS/RCS and ECLSS systems and crew health. Entry thermal sensors are manually deactivated
	- Ground provides initial orbital insertion data from tracking
Orbit 2	**Systems Checkout: IR Att Sensors, Kurs, Angular Accels, "Display" TV Downlink System, OMS engine control system, Manual Attitude Control Test**
	- Crew monitors all systems tests and confirms onboard indications
	- Crew performs manual RHC stick inputs for attitude control test
	- Ingress into HM, activate HM CO2 scrubber and doff Sokols
	- A/G, R/T and Recorded TLM and Display TV downlink
	- Radar and radio transponder tracking
	Manual maneuver to +Y to Sun and initiate a 2 deg/sec yaw rotation. MCS is deactivated after rate is established.
Orbit 3	**Terminate +Y solar rotation, reactivate MCS and establish LVLH attitude reference (auto maneuver sequence)**
	- Crew monitors LVLH attitude reference build up
	- Burn data command upload for DV1 and DV2 (attitude, TIG Delta V's)
	- Form 14 preburn emergency deorbit pad read up
	- A/G, R/T and Recorded TLM and Display TV downlink
	- Radar and radio transponder tracking
	Auto maneuver to DV1 burn attitude (TIG - 8 minutes) while LOS
	- Crew monitor only, no manual action nominally required
	DV1 phasing burn while LOS
	- Crew monitor only, no manual action nominally required
Orbit 4	**Auto maneuver to DV2 burn attitude (TIG - 8 minutes) while LOS**
	- Crew monitor only, no manual action nominally required
	DV2 phasing burn while LOS
	- Crew monitor only, no manual action nominally required

FLIGHT DAY 1 OVERVIEW (CONTINUED)	
Orbit 4 (continued)	**Crew report on burn performance upon AOS**
	- HM and DM pressure checks read down
	- Post burn Form 23 (AOS/LOS pad), Form 14 and "Globe" corrections voiced up
	- A/G, R/T and Recorded TLM and Display TV downlink
	- Radar and radio transponder tracking
	Manual maneuver to +Y to Sun and initiate a 2 deg/sec yaw rotation. MCS is deactivated after rate is established.
	External boresight TV camera ops check (while LOS)
	Meal
Orbit 5	**Last pass on Russian tracking range for Flight Day 1**
	Report on TV camera test and crew health
	Sokol suit clean up
	- A/G, R/T and Recorded TLM and Display TV downlink
	- Radar and radio transponder tracking
Orbit 6-12	**Crew Sleep, off of Russian tracking range**
	- Emergency VHF2 comm available through NASA VHF Network
FLIGHT DAY 2 OVERVIEW	
Orbit 13	**Post sleep activity, report on HM/DM Pressures**
	Form 14 revisions voiced up
	- A/G, R/T and Recorded TLM and Display TV downlink
	- Radar and radio transponder tracking
Orbit 14	**Configuration of RHC-2/THC-2 work station in the HM**
	- A/G, R/T and Recorded TLM and Display TV downlink
	- Radar and radio transponder tracking
Orbit 15	**THC-2 (HM) manual control test**
	- A/G, R/T and Recorded TLM and Display TV downlink
	- Radar and radio transponder tracking
Orbit 16	**Lunch**
	- A/G, R/T and Recorded TLM and Display TV downlink
	- Radar and radio transponder tracking
Orbit 17 (1)	**Terminate +Y solar rotation, reactivate MCS and establish LVLH attitude reference (auto maneuver sequence)**
	RHC-2 (HM) Test
	- Burn data uplink (TIG, attitude, delta V)
	- A/G, R/T and Recorded TLM and Display TV downlink
	- Radar and radio transponder tracking
	Auto maneuver to burn attitude (TIG - 8 min) while LOS
	Rendezvous burn while LOS
	Manual maneuver to +Y to Sun and initiate a 2 deg/sec yaw rotation. MCS is deactivated after rate is established.

FLIGHT DAY 2 OVERVIEW (CONTINUED)	
Orbit 18 (2)	**Post burn and manual maneuver to +Y Sun report when AOS**
	- HM/DM pressures read down
	- Post burn Form 23, Form 14 and Form 2 (Globe correction) voiced up
	- A/G, R/T and Recorded TLM and Display TV downlink
	- Radar and radio transponder tracking
Orbit 19 (3)	**CO2 scrubber cartridge change out**
	Free time
	- A/G, R/T and Recorded TLM and Display TV downlink
	- Radar and radio transponder tracking
Orbit 20 (4)	**Free time**
	- A/G, R/T and Recorded TLM and Display TV downlink
	- Radar and radio transponder tracking
Orbit 21 (5)	**Last pass on Russian tracking range for Flight Day 2**
	Free time
	- A/G, R/T and Recorded TLM and Display TV downlink
	- Radar and radio transponder tracking
Orbit 22 (6) - 27 (11)	**Crew sleep, off of Russian tracking range**
	- Emergency VHF2 comm available through NASA VHF Network
FLIGHT DAY 3 OVERVIEW	
Orbit 28 (12)	**Post sleep activity**
	- A/G, R/T and Recorded TLM and Display TV downlink
	- Radar and radio transponder tracking
Orbit 29 (13)	**Free time, report on HM/DM pressures**
	- Read up of predicted post burn Form 23 and Form 14
	- A/G, R/T and Recorded TLM and Display TV downlink
	- Radar and radio transponder tracking
Orbit 30 (14)	**Free time, read up of Form 2 "Globe Correction," lunch**
	- Uplink of auto rendezvous command timeline
	- A/G, R/T and Recorded TLM and Display TV downlink
	- Radar and radio transponder tracking
FLIGHT DAY 3 AUTO RENDEZVOUS SEQUENCE	
Orbit 31 (15)	**Don Sokol spacesuits, ingress DM, close DM/HM hatch**
	- Active and passive vehicle state vector uplinks
	- A/G, R/T and Recorded TLM and Display TV downlink
	- Radio transponder tracking

FLIGHT DAY 3 AUTO RENDEZVOUS SEQUENCE (CONCLUDED)	
Orbit 32 (16)	**Terminate +Y solar rotation, reactivate MCS and establish LVLH attitude reference (auto maneuver sequence)**
	Begin auto rendezvous sequence
	- Crew monitoring of LVLH reference build and auto rendezvous timeline execution
	- A/G, R/T and Recorded TLM and Display TV downlink
	- Radio transponder tracking
FLIGHT DAY 3 FINAL APPROACH AND DOCKING	
Orbit 33 (1)	**Auto Rendezvous sequence continues, flyaround and station keeping**
	- Crew monitor
	- Comm relays via SM through Altair established
	- Form 23 and Form 14 updates
	- Fly around and station keeping initiated near end of orbit
	- A/G (gnd stations and Altair), R/T TLM (gnd stations), Display TV downlink (gnd stations and Altair)
	- Radio transponder tracking
Orbit 34 (2)	**Final Approach and docking**
	- Capture to “docking sequence complete” 20 minutes, typically
	- Monitor docking interface pressure seal
	- Transfer to HM, doff Sokol suits
	- A/G (gnd stations and Altair), R/T TLM (gnd stations), Display TV downlink (gnd stations and Altair)
	- Radio transponder tracking
FLIGHT DAY 3 STATION INGRESS	
Orbit 35 (3)	**Station/Soyuz pressure equalization**
	- Report all pressures
	- Open transfer hatch, ingress station
	- A/G, R/T and playback telemetry
	- Radio transponder tracking

Typical Soyuz Ground Track

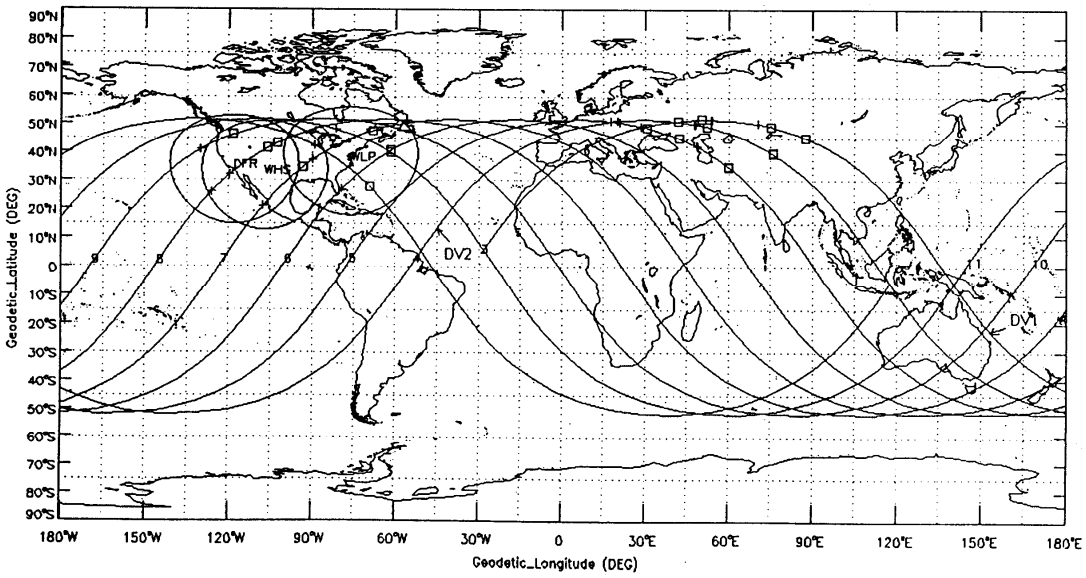

Key Times for Expedition 21/22 International Space Station Events

Expedition 21/SFP Launch on Soyuz TMA-16

2:14:42 a.m. CT on Wednesday, Sept. 30

7:14:42 GMT on Wednesday, Sept. 30

11:14:42 a.m. Moscow time on Wednesday, Sept. 30

13:14:42 p.m. Baikonur time on Wednesday, Sept. 30

Expedition 21/SFP Docking to International Space Station on Soyuz TMA-16 (Zvezda Service Module aft port)

3:37 a.m. CT on Friday, Oct. 2

8:37 GMT on Friday, Oct. 2

12:37 p.m. Moscow time on Friday, Oct. 2

Expedition 21/SFP Hatch Opening to Space Station

6:40 a.m. CT on Friday, Oct. 2

11:40 GMT on Friday, Oct. 2

15:40 p.m. Moscow time on Friday, Oct. 2

Expedition 20/SFP Hatch Closing to Space Station

5 p.m. CT on Saturday, Oct. 10

22:00 GMT on Saturday, Oct. 10

2 a.m. Moscow time on Sunday, Oct.11

4 a.m. Kazakhstan time on Sunday, Oct. 11

Expedition 20/SFP Undocking from Space Station on Soyuz TMA-14 (Pirs Docking Compartment)

8:05 p.m. CT on Saturday, Oct. 10

1:05 GMT on Sunday, Oct. 11

5:05 a.m. Moscow time on Sunday, Oct. 11

7:05 a.m. Kazakhstan time on Sunday, Oct. 11

Expedition 20/SFP Deorbit Burn on Soyuz TMA-14

10:38 p.m. CT on Saturday, Oct. 10

3:38 GMT on Sunday, Oct. 11

7:38 a.m. Moscow time on Sunday, Oct. 11

9:38 a.m. Kazakhstan time on Sunday, Oct. 11

Expedition 20/SFP Landing in Soyuz TMA-14

11:29:52 p.m. CT on Saturday, Oct. 10

4:29:52 GMT on Sunday, Oct. 11

8:29:52 a.m. Moscow time on Sunday, Oct. 11

10:29:52 a.m. Kazakhstan time on Sunday, Oct. 11 (appx. 2:41 after sunrise at the landing site)

Expedition 20/Soyuz TMA-14 Landing

ISS020E037505

European Space Agency astronauts Frank De Winne (right), Expedition 20 flight engineer, and Christer Fuglesang, STS-128 mission specialist, prepare to install a new crew quarters compartment in the Kibo laboratory of the International Space Station while space shuttle Discovery remains docked with the station.

After a nine day handover with the newly arrived Expedition 21 crew, Expedition 20 Soyuz Commander Gennady Padalka, NASA Flight Engineer Mike Barratt and Canadian spaceflight participant Guy Laliberte will board their Soyuz TMA-14 capsule for undocking and a one-hour descent back to Earth. Padalka and Barratt will complete a six month mission in orbit, while Laliberte will return after an 11-day flight.

About three hours before undocking, Padalka, Barratt and Laliberte will bid farewell to the new Expedition 21 crew, Commander Frank De Winne and Flight Engineers Jeff Williams, Maxim Suraev, Nicole Stott, Roman Romanenko and Robert Thirsk. Williams and Suraev are launching to the International Space Station from the Baikonur Cosmodrome in Kazakhstan on the Soyuz TMA-16 vehicle. Stott arrived at the station in August on space shuttle Discovery.

Romanenko, Thirsk and De Winne arrived in May on board the Soyuz TMA-15 vehicle. The departing crew will climb into their Soyuz vehicle and close the hatch between Soyuz and the Zarya module. Barratt will be seated in the Soyuz' left seat for entry and landing as onboard engineer. Soyuz Commander Padalka will be in the center seat, as he was for launch in March, and Laliberte will occupy the right seat.

After activating Soyuz systems and getting approval from flight controllers at the Russian Mission Control Center outside Moscow, Padalka will send commands to open hooks and latches between Soyuz and Zarya.

Padalka will fire the Soyuz thrusters to back away from Zarya. Six minutes after undocking, with the Soyuz about 66 feet away from the station, Padalka will conduct a separation maneuver, firing the Soyuz jets for about 15 seconds to begin to depart the vicinity of the complex.

About 2.5 hours after undocking, at a distance of about 12 miles from the station, Soyuz computers will initiate a deorbit burn braking maneuver. The 4.5-minute maneuver to slow the spacecraft will enable it to drop out of orbit and begin its reentry to Earth.

About 30 minutes later, just above the first traces of the Earth's atmosphere, computers will command the pyrotechnic separation of the three modules of the Soyuz vehicle. With the crew strapped in the Descent Module, the uppermost Orbital Module, containing the docking mechanism and rendezvous antennas, and the Instrumentation and Propulsion Module at the rear, which houses the engines and avionics, will separate and burn up in the atmosphere.

The Descent Module's computers will orient the capsule with its ablative heat shield pointing forward to repel the buildup of heat as it plunges into the atmosphere. The crew will feel the first effects of gravity about three minutes after module separation at the point called entry interface, when the module is about 400,000 feet above the Earth.

About eight minutes later, at an altitude of about 33,000 feet, traveling at about 722 feet per second, the Soyuz will begin a computer-commanded sequence for the deployment of the capsule's parachutes. First, two "pilot" parachutes will be deployed, extracting a larger drogue parachute, which stretches out over an area of 79 square feet. Within 16 seconds, the Soyuz' descent will slow to about 262 feet per second.

The initiation of the parachute deployment will create a gentle spin for the Soyuz as it dangles underneath the drogue chute, assisting in the capsule's stability in the final minutes prior to touchdown.

A few minutes before touchdown, the drogue chute will be jettisoned, allowing the main parachute to be deployed. Connected to the Descent Module by two harnesses, the main parachute covers an area of about 3,281 feet. The deployment of the main parachute slows the Descent Module to a velocity of about 23 feet per second. Initially, the Descent Module will hang underneath the main parachute at a 30 degree angle with respect to the horizon for aerodynamic stability. The bottommost harness will be severed a few minutes before landing, allowing the Descent Module to right itself to a vertical position through touchdown.

At an altitude of a little more than 16,000 feet, the crew will monitor the jettison of the Descent Module's heat shield, which will be followed by the termination of the aerodynamic spin cycle and the dissipation of any residual propellant from the Soyuz. Computers also will arm the module's seat shock absorbers in preparation for landing.

When the capsule's heat shield is jettisoned, the Soyuz altimeter is exposed to the surface of the Earth. Signals are bounced to the ground from the Soyuz and reflected back, providing the capsule's computers updated information on altitude and rate of descent.

At an altitude of about 39 feet, cockpit displays will tell Padalka to prepare for the soft landing engine firing. Just 3 feet above the surface, and just seconds before touchdown, the six solid-propellant engines will be fired in a final braking maneuver. This will enable the Soyuz to settle down to a velocity of about five feet per second and land, completing its mission.

As always is the case, teams of Russian engineers, flight surgeons and technicians in fleets of MI-8 helicopters will be poised near the normal and "ballistic" landing zones, and midway in between, to enact the swift recovery of Barratt, Padalka and Laliberte once the capsule touches down.

A portable medical tent will be set up near the capsule in which the crew can change out of its launch and entry suits. Russian technicians will open the module's hatch and begin to remove the crew members. The crew will be seated in special reclining chairs near the capsule for initial medical tests and to begin readapting to Earth's gravity.

About two hours after landing, the crew will be assisted to the recovery helicopters for a flight back to a staging site in northern Kazakhstan, where local officials will welcome them. The crew then will board a Russian military plane and be flown to the Chkalovsky Airfield adjacent to the Gagarin Cosmonaut Training Center in Star City, Russia, where their families will meet them. In all, it will take around eight hours between landing and the return to Star City.

Assisted by a team of flight surgeons, Barratt and Padalka will undergo planned medical tests and physical rehabilitation. Laliberte's acclimation to Earth's gravity will take a much shorter period of time due to the brevity of his flight.

NASA astronauts Rick Sturckow (left), STS-128 commander; Nicole Stott, Expedition 20 flight engineer; and Tim Kopra, STS-128 mission specialist, pose for a photo on the middeck of space shuttle Discovery while docked with the International Space Station.

Soyuz TMA-14 Entry Timeline

Farewells and Hatch Closing

5 p.m. CT on Oct. 10

22:00 GMT on Oct. 10

2 a.m. Moscow time on Oct. 11

4 a.m. Kazakhstan time on Oct. 11

Undocking Command to Begin to Open Hooks and Latches; Undocking Command + 0 mins.)

8:02 p.m. CT on Oct. 10

1:02 GMT on Oct. 11

5:02 a.m. Moscow time on Oct. 11

7:02 a.m. Kazakhstan time on Oct. 11

Hooks Opened/Physical Separation of Soyuz from Zarya Module nadir port at .12 meter/sec.; Undocking Command + 3 mins.)

8:05 p.m. CT on Oct. 10

1:05 GMT on Oct. 11

5:05 a.m. Moscow time on Oct. 11

7:05 a.m. Kazakhstan time on Oct. 11

Separation Burn from International Space Station (15 second burn of the Soyuz engines, .65 meters/sec.; Soyuz distance from the ISS is ~20 meters)

8:08 p.m. CT on Oct.10

1:08 GMT on Oct. 11

5:08 a.m. Moscow time on Oct. 11

7:08 a.m. Kazakhstan time on Oct.11

Deorbit Burn (appx 4:22 in duration, 115.2 m/sec.; Soyuz distance from the Space Station is ~12 kilometers; Undocking Command appx + ~2 hours, 30 mins.)

10:38 p.m. CT on Oct. 10

3:38 GMT on Oct. 11

7:38 a.m. Moscow time on Oct. 11

9:38 a.m. Kazakhstan time on Oct. 11

Separation of Modules (~23 mins. after Deorbit Burn; Undocking Command + ~2 hours, 57 mins.)

11:02 p.m. CT on Oct. 10

4:02 GMT on Oct. 11

8:02 a.m. Moscow time on Oct. 11

10:02 a.m. Kazakhstan time on Oct. 11

Entry Interface (400,000 feet in altitude; 3 mins. after Module Separation; 31 mins. after Deorbit Burn; Undocking Command + ~3 hours)

11:06 p.m. CT on Oct. 10

4:06 GMT on Oct. 11

8:06 a.m. Moscow time on Oct. 11

10:06 a.m. Kazakhstan time on Oct. 11

Command to Open Chutes (8 mins. after Entry Interface; 39 mins. after Deorbit Burn; Undocking Command + ~3 hours, 8 mins.)

11:14 p.m. CT on Oct. 10

4:14 GMT on Oct. 11

8:14 a.m. Moscow time on Oct. 11

10:14 a.m. Kazakhstan time on Oct. 11

Two pilot parachutes are first deployed, the second of which extracts the drogue chute. The drogue chute is then released, measuring 24 square meters, slowing the Soyuz down from a descent rate of 230 meters/second to 80 meters/second.

The main parachute is then released, covering an area of 1,000 meters; it slows the Soyuz to a descent rate of 7.2 meters/second; its harnesses first allow the Soyuz to descend at an angle of 30 degrees to expel heat, then shifts the Soyuz to a straight vertical descent.

Soft Landing Engine Firing (6 engines fire to slow the Soyuz descent rate to 1.5 meters/second just .8 meter above the ground)

Landing – appx. 2 seconds

Landing (~50 mins. after Deorbit Burn; Undocking Command + ~3 hours, 24 mins.)

11:29:52 p.m. CT on Oct. 10

4:29:52 GMT on Oct. 11

8:29:52 a.m. Moscow time on Oct. 11

10:29:52 a.m. Kazakhstan time on Oct. 11 (~2:41 after sunrise at the landing site).

Mini-Research Module 2

The Mini-Research Module 2 (MRM2) is a new Russian module that will arrive at the International Space Station early in the Expedition 21 increment. It is scheduled to be launched Nov. 10 from the Baikonur Cosmodrome, Kazakhstan, on a Russian Soyuz rocket, and will dock to the space-facing port of the Zvezda Service Module two days later.

Developed at RSC Energia, MRM2 will double as a new airlock and docking port for arriving Russian vehicles to the space station. The module will increase the number of ports on the Russian segment of the station and enable further development of the Russian program of space station experiments and research.

MRM2 will provide a docking target for visual monitoring of automated Soyuz and Progress vehicle dockings and will provide up to 3 cubic meters of pressurized volume for stowing cargo and science hardware.

For its flight to the station, MRM2 will deliver up to 1,000 kg (2,204 lb) of cargo in its pressurized compartment. Eight hundred kilograms (1,764 lb) will consist of Russian Orlan space suits and life support equipment.

MRM2 Basic Specifications

Launch mass	3670 ± 50 kg (8091 ± 110 lb)
Maximum hull diameter	2.550 m (8 ft 4 in)
Hull length between docking assembly planes	4.049 m (13 ft 3 in)
Pressurized volume	14.8 m3 (523 ft3)
Habitable volume	10.7 m3 (380 ft3)
Number of egress hatches (open inward)	2
Egress hatch diameter	1.000 m (3 ft 3 in)

External Features

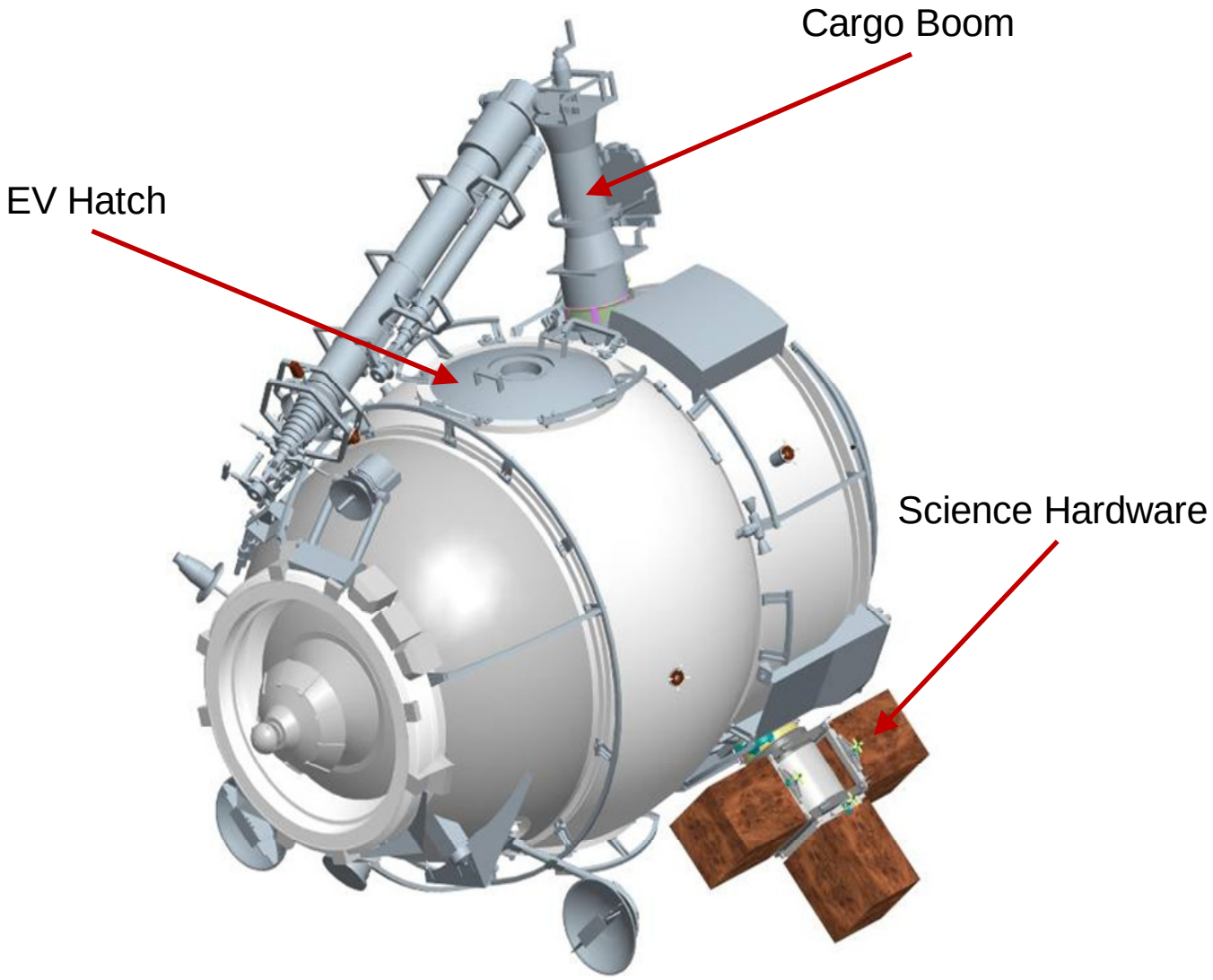

Payload System Workstations

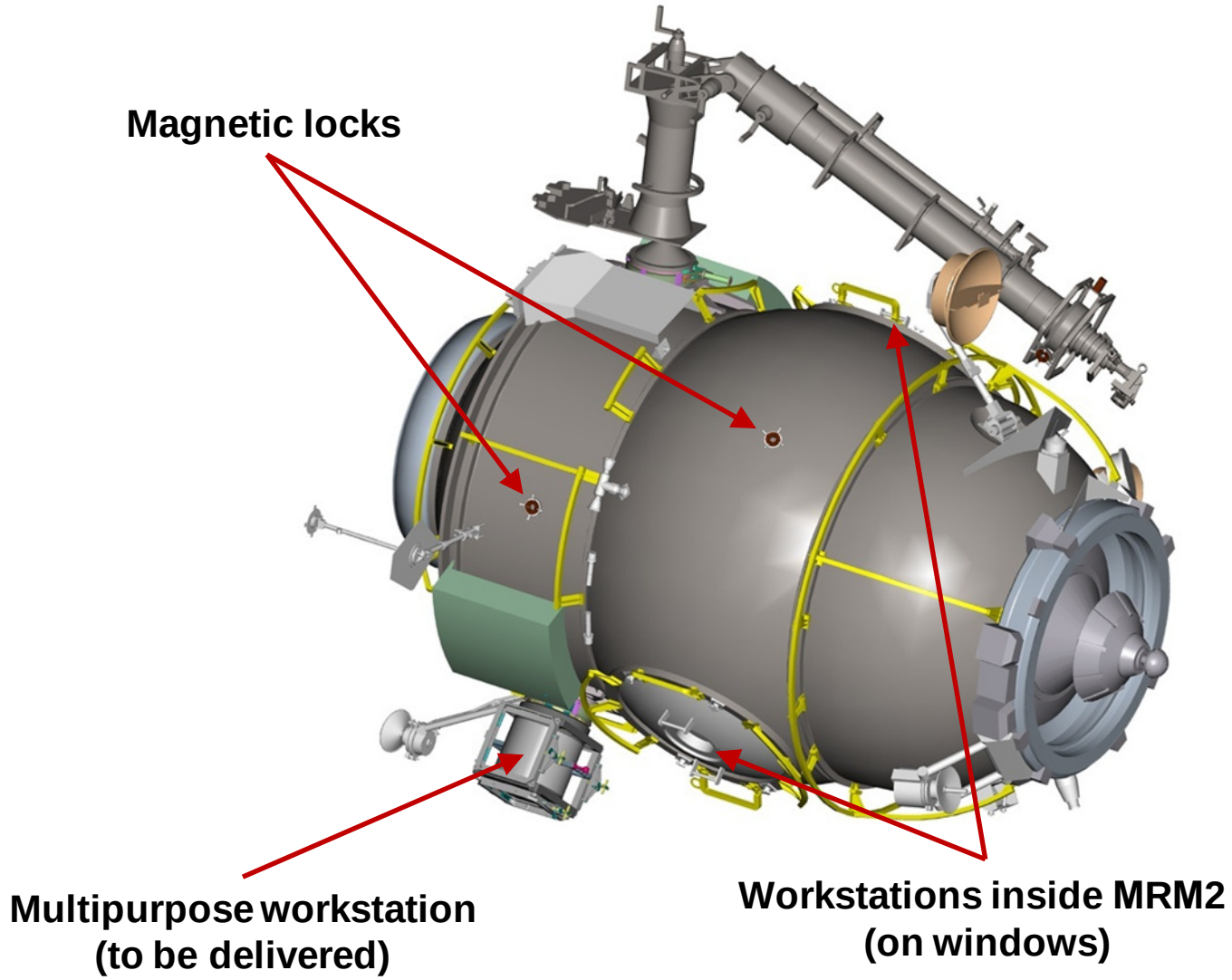

ISS Russian Segment after MRM2 Integration

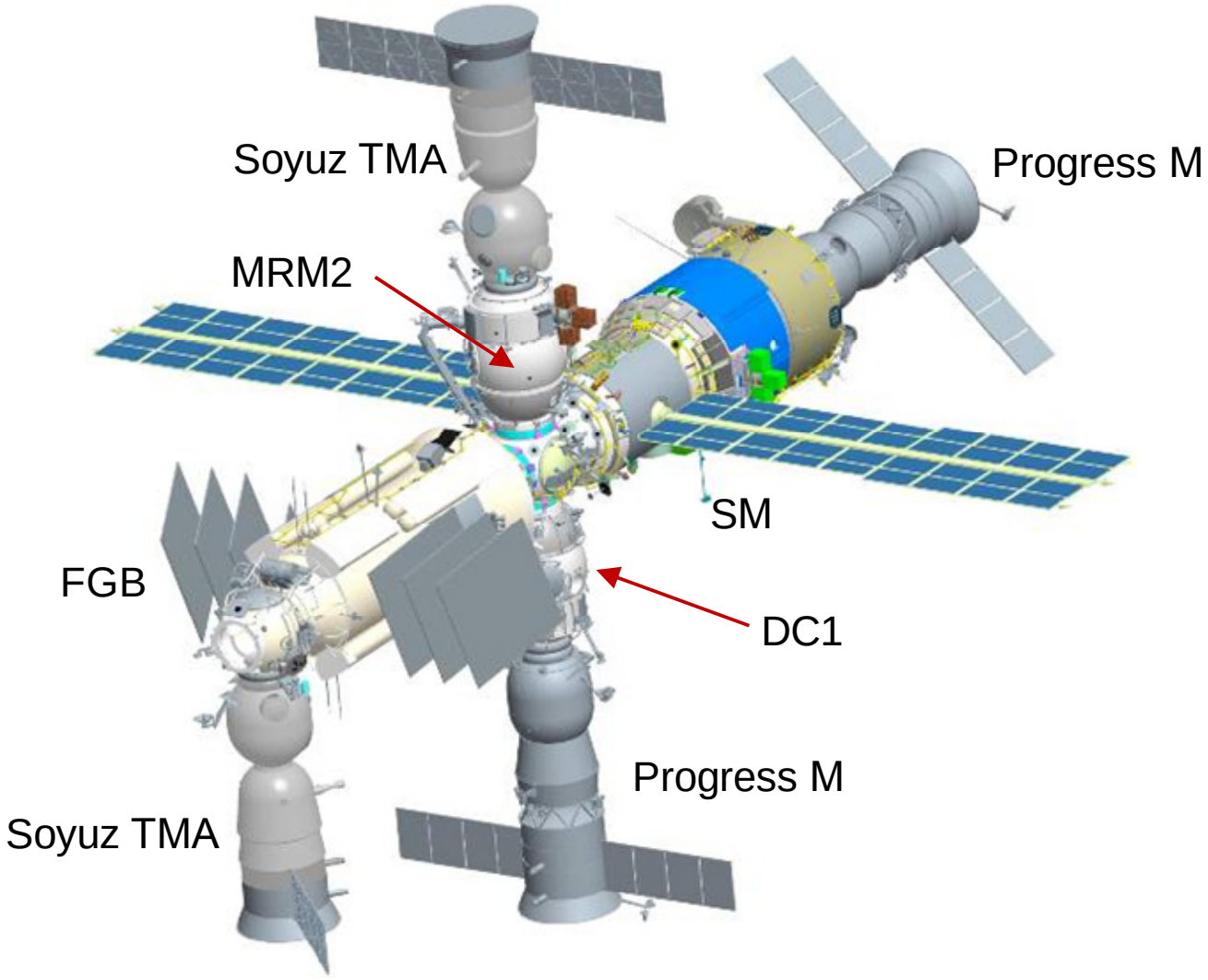

ISS after MRM2, MRM1, and MLM Integration

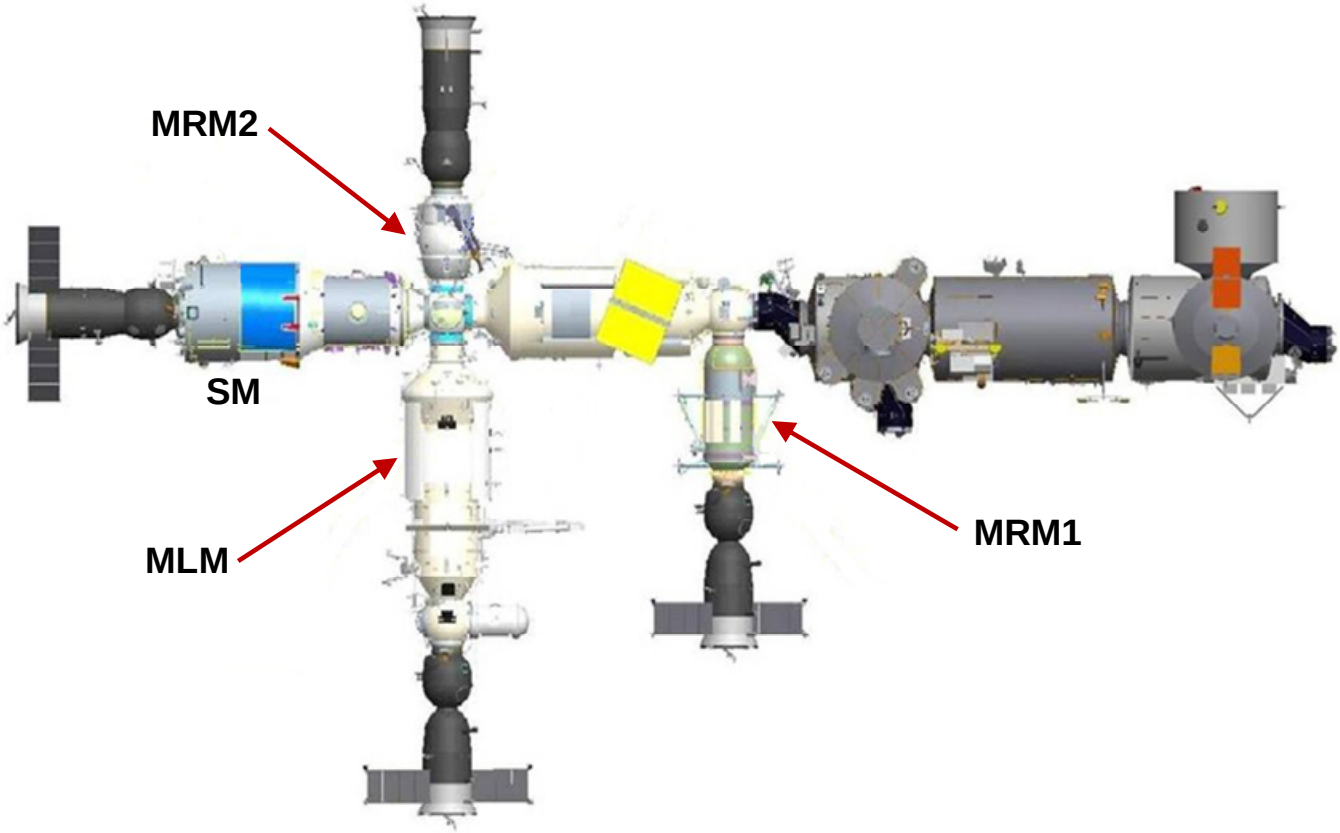

This page intentionally blank

International Space Station: Expedition 21/22 Science Overview

The Expedition 21/22 mission marks start of the transition from assembling the International Space Station to using it for continuous scientific research in the fall of 2010.

Nearly 150 operating experiments in human research; biological and physical sciences; technology development; Earth observation, and educational activities will be conducted aboard the station, including several pathfinder investigations under the auspices of the station's new role as a U.S. National Laboratory.

In the past, assembly and maintenance activities have dominated the available time for crew work. But as completion of the orbiting laboratory nears, additional facilities, and the crew members to operate them, will enable a measured increase in time devoted to research as a national and multinational laboratory.

Among the new National Laboratory Pathfinder (NLP) investigations are the latest experiments in the NLP-Vaccine series, which will follow up on recent discoveries about how the infectious nature of some germs can be controlled. The NLP Vaccine research is aimed at developing vaccines against microbial pathogens, with results already obtained targeting Salmonella bacteria that cause diarrhea.

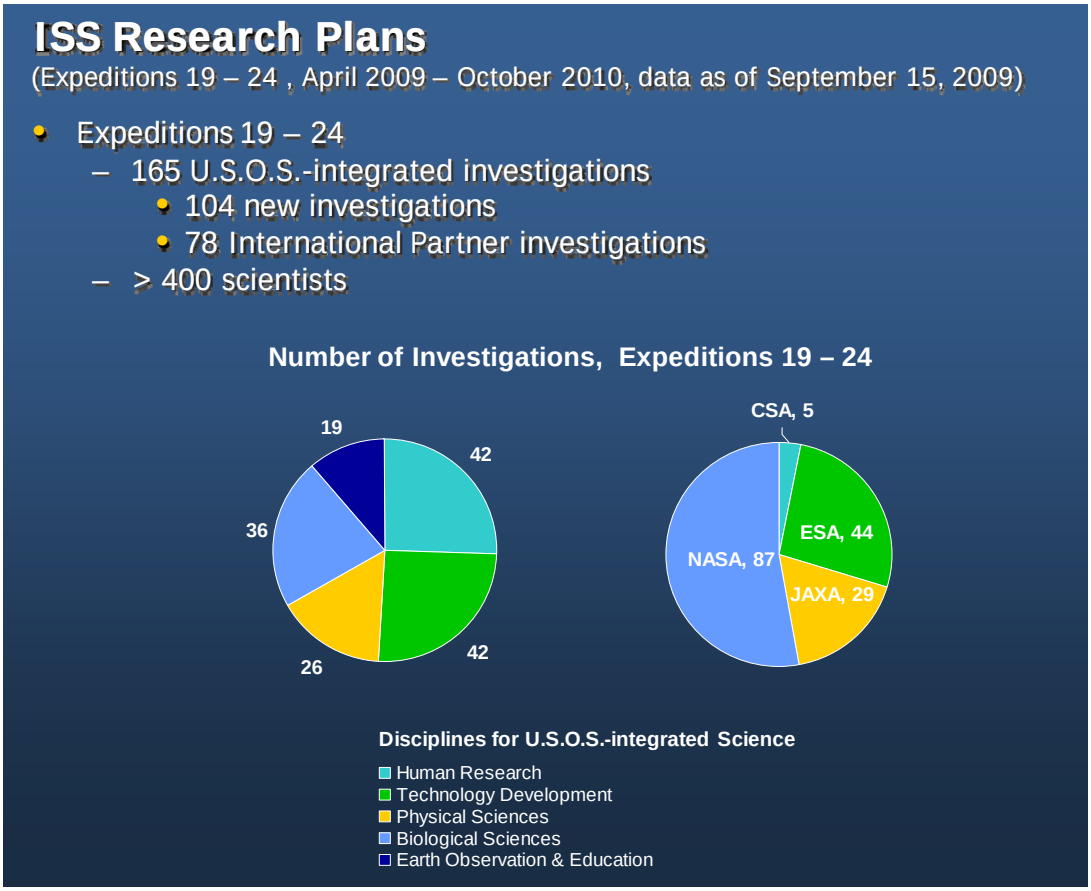

Outside the station, the new Materials International Space Station Experiment, MISSE 7, will be installed by the STS-129 crew of Atlantis in December. MISSE 7 will test space suit materials for use on the lunar surface and materials for the new solar arrays being designed for NASA's Orion spacecraft, evaluating how well they withstand the effects of atomic oxygen, ultraviolet, direct sunlight, radiation, and extremes of heat and cold.

The work of more than 400 scientists, this research has been prioritized based on fundamental and applied research needs established by NASA and the international partners – the Canadian Space Agency (CSA), the European Space Agency (ESA), the Japan Aerospace Exploration Agency (JAXA) and the Russian Federal Space Agency (RSA).

Managing the international laboratory's scientific assets, as well as the time and space required to accommodate experiments and programs, from a host of private, commercial, industry and government agencies nationwide, makes the job of coordinating space station research critical.

Teams of controllers and scientists on the ground continuously plan, monitor and remotely operate experiments from control centers around the globe. Controllers staff payload operations centers around the world, effectively providing for researchers and the station crew around the clock, seven days a week.

State-of-the-art computers and communications equipment deliver up-to-the-minute reports about experiment facilities and investigations between science outposts across the United States and around the world. The payload operations team also synchronizes the payload time lines among international partners, ensuring the best use of valuable resources and crew time.

The control centers of NASA and its partners are

- NASA Payload Operations Center, Marshall Space Flight Center in Huntsville, Ala.
- RSA Center for Control of Spaceflights ("TsUP" in Russian) in Korolev, Russia
- JAXA Space Station Integration and Promotion Center (SSIPC) in Tskuba, Japan
- ESA Columbus Control Center (Col-CC) in Oberpfaffenhofen, Germany
- CSA Payloads Operations Telesciences Center, St. Hubert, Quebec, Canada

NASA's Payload Operations Center serves as a hub for coordinating much of the work related to delivery of research facilities and experiments to the space station as they are rotated in and out periodically when space shuttles or other vehicles make deliveries and return completed experiments and samples to Earth.

The payload operations director leads the POC's main flight control team, known as the "cadre," and approves all science plans in coordination with Mission Control at NASA's Johnson Space Center in Houston, the international partner control centers and the station crew.

On the Internet

For fact sheets, imagery and more on Expedition 21/22 experiments and payload operations, visit

http://www.nasa.gov/mission_pages/station/science/

Location of International Space Station Experiment Facilities

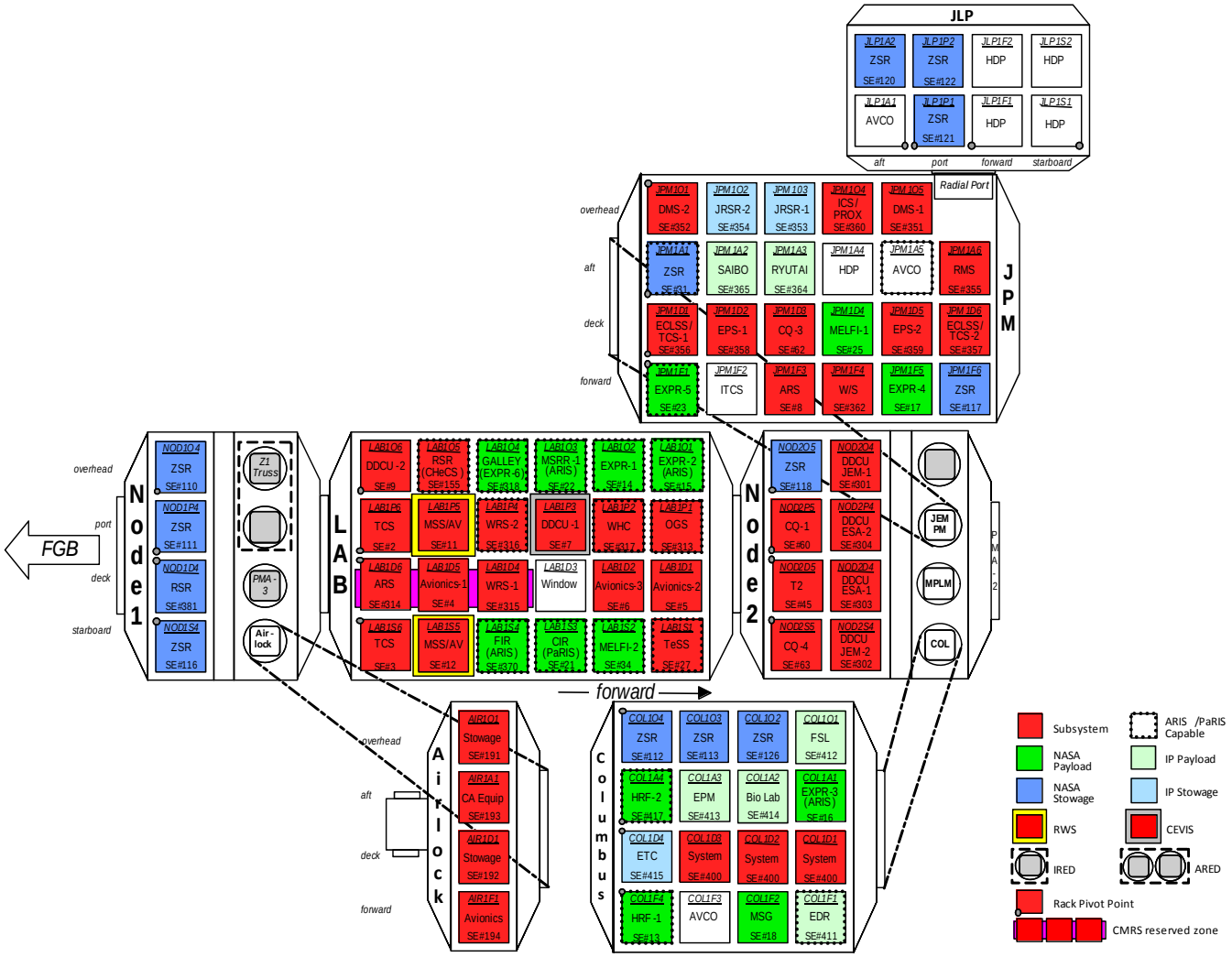

International Space Station Experiment Facilities

Name	Title	Agency	Category	Summary	Location
BioLab	Biological Experiment Laboratory	ESA	Facilities	Biological Experiment Laboratory in Columbus (BioLab) is a multi-user research facility located in the European Columbus Laboratory. It will be used to perform space biology experiments on microorganisms, cells, tissue cultures, small plants and small invertebrates. BioLab will allow a better understanding of the effects of microgravity and space radiation on biological organisms	Columbus
EDR	European Drawer Rack	ESA	Facilities	European Drawer Rack (EDR) is a multidiscipline facility to support up to seven modular Experiment Modules (EM). Each payload may be composed of several EMs. Each payload will have its own cooling, power, and data communications, as well as vacuum, venting and nitrogen supply if required	Columbus
EPM	European Physiology Module	ESA	Facilities	European Physiology Module (EPM) is designed to investigate the effects of short-term and long-duration space flights on the human body. It includes equipment for studies in neuroscience, cardiovascular, bone and muscle physiology	Columbus
ETC	European Transportation Carrier	ESA	Facilities	The European Transportation Carrier (ETC) will provide on-orbit stowage for payload items and support of additional European facilities. After the first use of the rack, it will be used primarily as a transport rack in conjunction with the Multi-Purpose Logistics Module (MPLM)	Columbus
FSL	Fluid Science Laboratory	ESA	Facilities	Fluid Science Laboratory (FSL) is a multiuser facility, designed by the European Space Agency (ESA) for conducting fluid physics research in microgravity conditions. It can be operated in fully or in semi-automatic mode and can be controlled onboard by the International Space Station (ISS) crewmembers, or from the ground in telescience mode	Columbus

International Space Station Experiment Facilities (continued)

Name	Title	Agency	Category	Summary	Location
Solar	Sun Monitoring on the External Payload Facility of Columbus	ESA	Facilities	Sun Monitoring on the External Payload Facility of Columbus (Solar) is a monitoring observatory that will measure the solar spectral irradiance. Apart from scientific contributions for solar and stellar physics, the knowledge of the solar energy irradiance into the Earth's atmosphere and its variations is of great importance for atmospheric modeling, atmospheric chemistry and climatology	External
Ryutai	Ryutai Experiment Rack	JAXA	Facilities	Ryutai Experiment Rack (Ryutai) which means "fluid," is a multipurpose payload rack system that includes a Fluid Physics Experiment Facility, Solution Crystallization Observation Facility, Protein Crystallization Research Facility, and image processing	Kibo
Saibo	Saibo Experiment Rack	JAXA	Facilities	Saibo Experiment Rack (Saibo), which means "living cell," includes a Clean Bench glovebox with microscope that isolates the organisms being studied, and Cell Biology Experiment Facility that includes incubator and centrifuges	Kibo
CIR	Combustion Integrated Rack	NASA	Facilities	The Combustion Integrated Rack (CIR) includes an optics bench, combustion chamber, fuel and oxidizer control, and five different cameras for performing combustion experiments in microgravity	Destiny
EMCS	European Modular Cultivation System	NASA	Facilities	European Modular Cultivation System (EMCS) allows for cultivation, stimulation and crew-assisted operation of biological experiments under well-controlled conditions (e.g., temperature, atmospheric composition, water supply and illumination). It includes two centrifuges that can provide artificial gravity from 0 to 2G	

International Space Station Experiment Facilities (continued)

Name	Title	Agency	Category	Summary	Location
EXPRESS Rack-1	EXpedite the PRocessing of Experiments to Space Station Rack-1	NASA	Facilities	EXpedite the PRocessing of Experiments to Space Station Rack-1 (EXPRESS Rack-1) is a multipurpose payload rack system that stores and supports experiments aboard the International Space Station. The EXPRESS Rack system supports science experiments in any discipline by providing structural interfaces, power, data, cooling, water and other items needed to operate science experiments in space	Destiny
EXPRESS Rack-2A	EXpedite the PRocessing of Experiments to Space Station Rack-2 Active Rack Isolation System	NASA	Facilities	EXpedite the PRocessing of Experiments to Space Station Rack-2 Active Rack Isolation System (EXPRESS Rack-2A) is a modified EXPRESS Rack (ER) that house experiments aboard the International Space Station. The ARIS component of the ER reduces external vibration disturbances at selected experiment locations inside the ER, allowing the payloads to operate in an environment of greatly reduced vibrational disturbances	Destiny
EXPRESS Rack-3A	EXpedite the PRocessing of Experiments to Space Station Rack-3 Active Rack Isolation System	NASA	Facilities	EXpedite the PRocessing of Experiments to Space Station Rack-3 Active Rack Isolation System (EXPRESS Rack-3A) is a modified EXPRESS Rack (ER) that house experiments aboard the International Space Station. The ARIS component of the ER reduces external vibration disturbances at selected experiment locations inside the ER, allowing the payloads to operate in an environment of greatly reduced vibrational disturbances	Columbus

International Space Station Experiment Facilities (continued)

Name	Title	Agency	Category	Summary	Location
EXPRESS Rack-4	EXpedite the PRocessing of Experiments to Space Station Rack-4	NASA	Facilities	The EXPRESS Rack is a multipurpose payload rack system that transports, stores and supports experiments aboard the International Space Station. The EXPRESS Rack system supports science payloads in any discipline by providing structural interfaces, power, data, cooling, water and other items needed to operate science experiments in space	Kibo
EXPRESS Rack-5	EXpedite the PRocessing of Experiments to Space Station Rack-5	NASA	Facilities	The EXPRESS Rack are multipurpose payload rack systems that store and supports experiments aboard the International Space Station. The EXPRESS Rack system supports science payloads in any discipline by providing structural interfaces, power, data, cooling, water and other items needed to operate science experiments in space	Kibo
EXPRESS Rack-6	EXpedite the PRocessing of Experiments to Space Station Rack-6	NASA	Facilities	EXpedite the PRocessing of Experiments to Space Station Rack-6 (EXPRESS Rack-6) are multipurpose payload rack systems that store and support experiments aboard the International Space Station. The EXPRESS Rack system supports science experiments in any discipline by providing structural interfaces, power, data, cooling, water and other items needed to operate science	
FIR	Fluids Integrated Rack	NASA	Facilities	The Fluids Integrated Rack (FIR) is a complementary fluid physics research facility designed to host investigations in areas such as colloids, gels, bubbles, wetting and capillary action, and phase changes including, boiling and cooling	Destiny
HRF-1	Human Research Facility-1	NASA	Facilities	The Human Research Facility-1 (HRF-1) enables study of the effects of long-duration space flight on the human body. Equipment in the HRF-1 includes a clinical ultrasound and a device for measuring mass	Columbus

International Space Station Experiment Facilities (continued)

Name	Title	Agency	Category	Summary	Location
HRF-2	Human Research Facility-2	NASA	Facilities	The Human Research Facility-2 (HRF-2) enables study of the effects of long-duration space flight on the human body. HRF-2 equipment includes a refrigerated centrifuge; devices for measuring blood pressure, and heart function; and the Pulmonary Function System for measuring lung function	Columbus
MELFI	Minus Eighty-Degree Laboratory Freezer for ISS	NASA	Facilities	Minus Eighty-Degree Laboratory Freezer for ISS (MELFI) is a European Space Agency built, National Aeronautics and Space Administration operated freezers will store samples on ISS at temperatures as low as -80 degrees C	Kibo
MELFI-2	Minus Eighty-Degree Laboratory Freezer for ISS -2	NASA	Facilities	Minus Eighty-Degree Laboratory Freezer for ISS (MELFI) is a European Space Agency built, National Aeronautics and Space Administration operated freezers will store samples on ISS at temperatures as low as -80 degrees C	
MSG	Microgravity Science Glovebox	NASA	Facilities	Microgravity Science Glovebox (MSG) provides a safe contained environment for research with liquids, combustion and hazardous materials aboard the International Space Station (ISS). Without the MSG, many types of hands-on investigations would be impossible or severely limited onboard the Station	Columbus
MSRR	Materials Science Research Rack-1	NASA	Facilities	The Materials Science Research Rack-1 (MSRR-1) will be used for basic materials research in the microgravity environment of the ISS. MSRR-1 can accommodate and support diverse Experiment Modules (EMs). In this way many material types, such as metals, alloys, polymers, semiconductors, ceramics, crystals, and glasses, can be studied to discover new applications for existing materials and new or improved materials	Destiny

International Space Station Experiment Facilities (concluded)

Name	Title	Agency	Category	Summary	Location
UMS	Urine Monitoring System	NASA	Facilities	The Urine Monitoring System (UMS) is a system designed to collect an individual crewmember's void, gently separate urine from air, accurately measure void volume, allow for void sample acquisition, and discharge remaining urine into the Waste and Hygiene Compartment (WHC) onboard the International Space Station (ISS)	

International Space Station Experiments – Expedition 21 and 22

Acronym	Title	Agency	Category	Summary	Facility	Principal Investigator	ISS/ Sortie	Ops Location
AgCam	Agricultural Camera	NASA	Observing the Earth and Educational Activities	The Agricultural Camera (AgCam) will take frequent images, in visible and infrared light, of vegetated areas on the Earth, principally of growing crops, rangeland, grasslands, forests, and wetlands in the northern Great Plains and Rocky Mountain regions of the United States. Images will be delivered within 2 days directly to requesting farmers, ranchers, foresters, natural resource managers and tribal officials to help improve their environmental stewardship of the land. Images will also be shared with educators for classroom use	Express Rack	AgCam was built and will be operated primarily by students and faculty at the University of North Dakota, Grand Forks, ND. George A. Seielstad, Ph.D., University of North Dakota, Grand Forks, ND	ISS	Destiny
ARISS	Amateur Radio on the International Space Station	NASA	Observing the Earth and Educational Activities	The Amateur Radio on the International Space Station (ARISS) uses ham radio equipment onboard the International Space Station (ISS) to connect crewmembers to groups that include general public, teachers, students, and parents. The goal of ARISS is to get students interested in mathematics and science by allowing them to talk directly with the crews living and working aboard the ISS	Unknown		ISS	External
Zag	Ambiguous Tilt and Translation Motion Cues After Space Flight	ESA	Human Research and Countermeasures Development	Ambiguous Tilt and Translation Motion Cues After Space Flight (Zag) will investigate the exposure to combined tilt and translation motion profiles. It will also examine the effects of stimulus frequency (0.15 - 0.6Hz) on adaptive changes in eye movements and motion perception, and evaluate how a tactile prosthesis can be used to improve control performance	No Facility	Gilles Clement, Ph.D., Centre National de la Recherche Scientifique, Toulouse, France	Pre/ Postflight	Ground

International Space Station Experiments – Expedition 21 and 22 (continued)

Acronym	Title	Agency	Category	Summary	Facility	Principal Investigator	ISS/ Sortie	Ops Location
	Aquarium	RSA	Biomedical	Study of stability of model closed ecological system and its parts under microgravity conditions, both as microsystem components and as perspective biological systems of space crews life support				
	ARIL	RSA	Biotechnology	Effect produced by SFFs on expression of strains producing interleukins 1α, 1β, "ARIL"				
EKE	Assessment of Endurance Capacity by Gas Exchange and Heart Rate Kinetics during Physical Training	ESA	Human Research and Countermeasures Development	Assessment of Endurance Capacity by Gas Exchange and Heart Rate Kinetics during Physical Training (EKE) targets the development of a diagnostic tool for the assessment of endurance capacity from respiratory and cardiovascular kinetics in response to changes in exercise intensity. It will also provide data for the development of a physiological model to explore the delay and distortion of muscle VO2 signals during their travel to the lungs	No Facility	U. Hoffman, S. Fasoulas, Dieter Essfeld, T. Drager	ISS	Destiny
	Astrovaktsina (astrovaccine)	RSA	Biotechnology	Cultivation of E.Coli-protein Caf1 producer in zero-g				
AIS/GATOR	Automatic Identification System/ Grappling Adaptor to On-Orbit Railing	ESA	Technology Development	AIS/GATOR (Automatic Identification System/Grappling Adaptor to On-Orbit Railing) aims to demonstrate the space-based capability of identification of maritime vessels using the Automatic Identification System (AIS). The Grappling Adaptor to On-Orbit Railing (GATOR) demonstrates the on-orbit capability of simple hardware designed to attached small passive equipment/payloads externally to the ISS Extravehicular handrails	Unknown	*Karsten Strauch,* European Space Research and Technology Center, Noordwijk, The Netherlands	ISS	External
	Bakteriofag	RSA	Biotechnology	Study of effect produced by space flight factors on bacteriophage				

International Space Station Experiments – Expedition 21 and 22 (continued)

Acronym	Title	Agency	Category	Summary	Facility	Principal Investigator	ISS/ Sortie	Ops Location
	Bar	RSA	Complex Analysis Effectiveness Estimation	Testing of principles and methods for the Space Station leak area control, selection of the sensor design and configuration				
	BIF	RSA	Biotechnology	Study of effect produced by space flight factors on technological and biomedical characteristics of bifid bacteria				
	BIMS (Onboard Information Medical System)	RSA	Biomedical	Study of flight medical information support using onboard information medical system				
BCAT-3	Binary Colloidal Alloy Test - 3	NASA	Physical Sciences in Microgravity	Binary Colloidal Alloy Test - 3 (BCAT-3) will allow crews to photograph samples of colloidal particles (tiny nanoscale spheres suspended in liquid) to document liquid/gas phase changes, and the formation of colloidal crystals confined to a surface. Results will help scientists develop fundamental physics concepts previously hindered by the effects of gravity. Data may lead to improvements in supercritical fluids used in rocket propellants and biotechnology applications, and advancements in fiber-optics technology	No Facility	David Weitz, Ph.D. and Peter Lu, Ph.D., Harvard University, Cambridge, MA	ISS	Destiny
BCAT-4	Binary Colloidal Alloy Test - 4	NASA	Physical Sciences in Microgravity	Binary Colloidal Alloy Test - 4 (BCAT-4) is a follow-on experiment to BCAT-3. BCAT-4 will study ten colloidal samples. Seven of these samples will determine phase separation rates and add needed points to the phase diagram of a model critical fluid system initially studied in BCAT-3. Three of these samples will use model hard-spheres to explore colloidal crystal formation, providing insight into how nature brings order out of disorder	No Facility	David Weitz, Ph.D. and Peter Lu, Ph.D., Harvard University, Cambridge, MA; Paul M. Chaikin, Ph.D., Princeton University, Princeton, NJ and New York University, New York, NY	ISS	Destiny

International Space Station Experiments – Expedition 21 and 22 (continued)

Acronym	Title	Agency	Category	Summary	Facility	Principal Investigator	ISS/ Sortie	Ops Location
BCAT-5	Binary Colloidal Alloy Test - 5	NASA	Physical Sciences in Microgravity	The Binary Colloidal Alloy Test - 5 (BCAT-5) is a suite of four investigations that will photograph randomized colloidal samples onboard the International Space Station (ISS) to determine their resulting structure over time. The use of EarthKAM software and hardware will allow the scientists to capture the kinetics (evolution) of their samples, as well as the final equilibrium state of each sample	No Facility	Arjun Yodh, Ph.D., University of Pennsylvania, University Park, PA; Barbara Frisken, Ph.D., Simon Fraser University, Burnaby, British Columbia, Canada; Matthew Lynch, Ph.D., Procter and Gamble, Cincinnati, OH; David Weitz, Ph.D., Harvard University, Cambridge, MA; Paul Chaikin, Ph.D., New York University, New York, NY	ISS	Destiny
	Biodegradatsiya	RSA	Biotechnology	Assessment of the initial stages of biodegradation and biodeterioration of the surfaces of structural materials				
	Bioemulsiya (Bioemulsion)	RSA	Biotechnology	Study and improvement of closed-type autonomous reactor for obtaining biomass of microorganisms and bioactive substance without additional ingredients input and metabolism products removal				

International Space Station Experiments – Expedition 21 and 22 (continued)

Acronym	Title	Agency	Category	Summary	Facility	Principal Investigator	ISS/ Sortie	Ops Location
Hair	Biomedical analyses of human hair exposed long-term space flight	JAXA	Human Spaceflight Technology Development	Hair will study the effects of long-term exposure to the space environment on gene expression and mineral metabolism in human hair. Human hair is one of the most suitable biological specimens for a space experiment since there are no special requirements for handling or for use of hardware. Hair matrix cells actively divide in a hair follicle while these cell divisions sensitively reflect physical conditions. The hair shaft records the information of the astronauts' metabolic conditions. These samples give us useful physiological information to examine the effects of spaceflight on astronauts participating in long-duration spaceflight missions. In the experiment, two different analyses will be performed using the ISS crew members' hair: 1) Nucleic Acids (RNA and mitochondrial DNA) and proteins in the hair root and 2) Minerals in the hair shaft	No Facility	Chiaki Mukai, JAXA	ISS	Kibo
	Biorisk	RSA	Biomedical	Study of space flight impact on microorganisms-substrates systems state related to space technique ecological safety and planetary quarantine problem				
	Biotrack	RSA	Biotechnology	Study of space radiation heavy charged particles fluxes influence on genetic properties of bioactive substances cells-producers				

International Space Station Experiments – Expedition 21 and 22 (continued)

Acronym	Title	Agency	Category	Summary	Facility	Principal Investigator	ISS/ Sortie	Ops Location
Bisphosphonates	Bisphosphonates as a Countermeasure to Space Flight Induced Bone Loss	NASA	Human Research and Countermeasures Development	Bisphosphonates as a Countermeasure to Space Flight Induced Bone Loss (Bisphosphonates) will determine whether antiresorptive agents (help reduce bone loss), in conjunction with the routine inflight exercise program, will protect ISS crewmembers from the regional decreases in bone mineral density documented on previous ISS missions	Human Research Facility-2 (HRF-2)	Adrian LeBlanc, Ph.D., Division of Space Life Sciences, Universities Space Research Association, Houston TX; Toshio Matsumoto, M.D., Ph.D., University of Tokushima, Kuramoto, Japan	ISS	Columbus
BISE	Bodies in the Space Environment	CSA	Human Research and Countermeasures Development	Bodies in the Space Environment (BISE) will evaluate adaptation to, the effect of, and recovery from long-duration microgravity exposure on the perception of orientation using the OCHART protocol	No Facility	Laurence R. Harris, Ph.D., York University, North York, Ontario, Canada	ISS	Destiny
CFE-2	Capillary Flow Experiment – 2	NASA	Physical Sciences in Microgravity	Capillary Flow Experiment – 2 (CFE-2) is a versatile experiment to study characteristics of low-g capillary flows. CFE-2 is designed to probe capillary phenomena of fundamental and applied importance, such as: capillary flow in complex containers, critical, critical wetting in discontinuous structures and surfaces, and passive gas-liquid phase separators	No Facility	Mark Weislogel, Ph.D., Portland State University, Portland, OR	ISS	Destiny

International Space Station Experiments – Expedition 21 and 22 (continued)

Acronym	Title	Agency	Category	Summary	Facility	Principal Investigator	ISS/ Sortie	Ops Location
Integrated Cardiovascular	Cardiac Atrophy and Diastolic Dysfunction During and After Long Duration Spaceflight: Functional Consequences for Orthostatic Intolerance, Exercise Capability and Risk for Cardiac Arrhythmias	NASA	Human Research and Countermeasures Development	Cardiac Atrophy and Diastolic Dysfunction During and After Long Duration Spaceflight: Functional Consequences for Orthostatic Intolerance, Exercise Capability and Risk for Cardiac Arrhythmias (Integrated Cardiovascular) will quantify the extent, time course and clinical significance of cardiac atrophy (decrease in the size of the heart muscle) associated with long-duration space flight. This experiment will also identify the mechanisms of this atrophy and the functional consequences for crewmembers who will spend extended periods of time in space	Human Research Facility-1 (HRF-1)	Benjamin D. Levine, M.D., Institute for Exercise and Environmental Medicine, Presbyterian Hospital and University of Texas Southwestern Medical Center at Dallas, Dallas, TX	ISS	Destiny
CCISS	Cardiovascular and Cerebrovascular Control on Return from ISS	NASA	Human Research and Countermeasures Development	Cardiovascular and Cerebrovascular Control on Return from ISS (CCISS) will study the effects of long-duration space flight on crewmembers' heart functions and their blood vessels that supply the brain. Learning more about the cardiovascular and cerebrovascular systems could lead to specific countermeasures that might better protect future space travelers. This experiment is collaborative effort with the Canadian Space Agency	Human Research Facility-2 (HRF-2)	Richard Lee Hughson, Ph.D., University of Waterloo, Waterloo, Ontario, Canada	ISS	Destiny
	Cascad (Cascade)	RSA	Biotechnology	Study of various types cells cultivation processes				

International Space Station Experiments – Expedition 21 and 22 (continued)

Acronym	Title	Agency	Category	Summary	Facility	Principal Investigator	ISS/ Sortie	Ops Location
CSI-03	Commercial Generic Bioprocessing Apparatus Science Insert – 03	NASA	Observing the Earth and Educational Activities	Commercial Generic Bioprocessing Apparatus Science Insert – 03 (CSI-03) is the third set of investigations in the CSI program series. The CSI program provides the K-12 community opportunities to utilize the unique microgravity environment of the International Space Station as part of the regular classroom to encourage learning and interest in science, technology, engineering and math. CSI-03 will examine the complete life cycle of the painted lady butterfly and the ability of an orb weaving spider to spin a web, eat and remain healthy in space	Express Rack	Nancy Moreno, Ph.D., Baylor College of Medicine, Houston, TX; Paula Cushing, Ph.D., Denver Museum of Nature and Science, Denver, CO; Mark Stowe, Gainesville, FL; Mary Ann Hamilton, Butterfly Pavilion, Westminster, CO; Ken Werner, Gulf Coast Butterflies, Naples, FL; Louis Stodieck, Ph.D., University of Colorado - Boulder, BioServe Space Technologies, Boulder, CO	ISS	Destiny

International Space Station Experiments – Expedition 21 and 22 (continued)

Acronym	Title	Agency	Category	Summary	Facility	Principal Investigator	ISS/ Sortie	Ops Location
SWAB	Comprehensive Characterization of Microorganisms and Allergens in Spacecraft	NASA	Human Research and Countermeasures Development	A Comprehensive Characterization of Microorganisms and Allergens in Spacecraft (SWAB) will use advanced molecular techniques to comprehensively evaluate microbes on board the space station, including pathogens (organisms that may cause disease). It also will track changes in the microbial community as spacecraft visit the station and new station modules are added. This study will allow an assessment of the risk of microbes to the crew and the spacecraft	No Facility	Duane L. Pierson, Ph.D., Johnson Space Center, Houston, TX	ISS	Destiny
	Constant	RSA	Biotechnology	Study of the influence factor space flight on activity ferment				
CVB	Constrained Vapor Bubble	NASA	Physical Sciences in Microgravity	Constrained Vapor Bubble (CVB) consists of a remotely controlled microscope and a small, wickless heat pipe or heat exchanger operating on an evaporation/condensation cycle. The objective is to better understand the physics of evaporation and condensation as they affect heat transfer processes in a heat exchanger designed for cooling critical, high heat output, components in microgravity	Fluids Integration Rack (FIR)	Peter C. Wayner, Jr., Ph.D., Rensselaer Polytechnic Institute, Troy, New York	ISS	Destiny
	Contur (Sidebar)	RSA	Technical Studies	Development of the methods of management through Internet robot-manipulator on ISS				

International Space Station Experiments – Expedition 21 and 22 (continued)

Acronym	Title	Agency	Category	Summary	Facility	Principal Investigator	ISS/ Sortie	Ops Location
CEO	Crew Earth Observations	NASA	Observing the Earth and Educational Activities	Crew Earth Observations (CEO) takes advantage of the crew in space to observe and photograph natural and human-made changes on Earth. The photographs record the Earth's surface changes over time, along with dynamic events such as storms, floods, fires and volcanic eruptions. These images provide researchers on Earth with key data to better understand the planet	No Facility	Susan Runco, Johnson Space Center, Houston, TX	ISS	Unknown
DTN	Delay Tolerant Networking	NASA	Technology Development	The Delay Tolerant Networking (DTN) will test communication protocols with the Commercial Generic Bioprocessing Apparatus (CGBA) onboard the International Space Station that can be used for exploration. The primary purpose of this activity is to rapidly mature the DTN technology for use in NASA's exploration missions and space communications architecture		Kevin Gifford, Ph.D., University of Colorado, Boulder, CO	ISS	

International Space Station Experiments – Expedition 21 and 22 (continued)

Acronym	Title	Agency	Category	Summary	Facility	Principal Investigator	ISS/ Sortie	Ops Location
DECLIC	DEvice for the study of Critical LIquids and Crystallization	NASA	Physical Sciences in Microgravity	DEvice for the study of Critical LIquids and Crystallization (DECLIC) is a multi-user facility consisting of three investigations, DECLIC - Alice Like Insert (DECLIC-ALI), DECLIC - High Temperature Insert (DECLIC-HTI) and DECLIC - Directional Solidification Insert (DECLIC-DSI) to study transparent media and their phase transitions in microgravity on board the International Space Station (ISS)	Express Rack	Yves Garrabos, Ph.D., Institute of Chemistry of the Condensed Matter of Bordeaux, Bordeaux, France; Bernard Billia, Ph.D., University Aix-Marseille, Marseille, France; Fabienne Duclos, Centre National d 'Etudes Spatiales, Toulouse, France	ISS	Kibo

International Space Station Experiments – Expedition 21 and 22 (continued)

Acronym	Title	Agency	Category	Summary	Facility	Principal Investigator	ISS/ Sortie	Ops Location
Pro-K	Dietary Intake Can Predict and Protect Against Changes in Bone Metabolism during Spaceflight and Recovery investigation	NASA	Human Research and Countermeasures Development	The Dietary Intake Can Predict and Protect Against Changes in Bone Metabolism during Spaceflight and Recovery investigation (Pro K) is NASA's first evaluation of a dietary countermeasure to lessen bone loss of astronauts. Studies to date have not proven any countermeasures against bone loss to be effective during flight. Pro K investigators propose that a flight diet with a decreased ratio of animal protein to potassium will lead to decreased loss of bone mineral. This investigation will allow researchers to see how diet affects loss of bone mass and recovery of bone after landing. Pro K will have an impact on the definition of nutritional requirements and development of food systems for future exploration missions to the Moon and Mars, and could yield a method of counteracting bone loss that would have virtually no risk of side effects and require no additional launch mass or crew time	Human Research Facility-1 (HRF-1)	Scott M. Smith, Ph.D., Johnson Space Center, Houston, TX	ISS	Columbus

International Space Station Experiments – Expedition 21 and 22 (continued)

Acronym	Title	Agency	Category	Summary	Facility	Principal Investigator	ISS/ Sortie	Ops Location
DOSIS-DOBIES	Dose Distribution Inside ISS - Dosimetry for Biological Experiments in Space	ESA	Human Research and Countermeasures Development	The Dose Distribution Inside ISS - Dosimetry for Biological Experiments in Space (DOSIS-DOBIES) consist of two investigations. The DOSIS portion of the experiment will provide documentation of the actual nature and distribution of the radiation field inside the spacecraft. Integral measurements of energy, charge and LET spectra of the heavy ion component will be done by the use of different nuclear track detectors. The objective of DOBIES is to develop a standard dosimetric method (as a combination of different techniques) to measure the absorbed doses and equivalent doses in biological samples	European Physiology Module (EPM)	Guenther Reitz, Ph.D., German Aerospace Center, Cologne, Germany; Filip Vanhavere, Ph.D., Belgian Nuclear Research Centre (SCK-CEN), Brussels, Belgium	ISS	Columbus
	Dykhanie	RSA	Biomedical	Study of respiration regulation and biomechanics under space flight conditions				
EDOS	Early Detection of Osteoporosis in Space	ESA	Human Research and Countermeasures Development	Early Detection of Osteoporosis in Space (EDOS) will test the ability of XtremeCT technology (developed by SCANCO Medical) to detect bone architecture changes and provide a better evaluation of the kinetics of bone loss recovery postflight	No Facility	Christian Alexandre, M.D., Universite Jean Monnet, St. Etienne, France	Pre/ Postflight	Ground

International Space Station Experiments – Expedition 21 and 22 (continued)

Acronym	Title	Agency	Category	Summary	Facility	Principal Investigator	ISS/ Sortie	Ops Location
EarthKAM	Earth Knowledge Acquired by Middle School Students	NASA	Observing the Earth and Educational Activities	Earth Knowledge Acquired by Middle School Students (EarthKAM), an education activity, allows middle school students to program a digital camera on board the International Space Station to photograph a variety of geographical targets for study in the classroom. Photos are made available on the world wide web for viewing and study by participating schools around the world. Educators use the images for projects involving Earth Science, geography, physics, and social science	No Facility	Sally Ride, Ph.D., University of California - San Diego, San Diego, CA	ISS	Destiny
EPO-Demos	Education Payload Operation - Demonstrations	NASA	Observing the Earth and Educational Activities	Education Payload Operation - Demonstrations (EPO-Demos) are recorded video education demonstrations performed on the International Space Station (ISS) by crewmembers using hardware already onboard the ISS. EPO-Demos are videotaped, edited, and used to enhance existing NASA education resources and programs for educators and students in grades K-12. EPO-Demos are designed to support the NASA mission to inspire the next generation of explorers	No Facility	Matthew Keil, Johnson Space Center, Houston, TX	ISS	Destiny

International Space Station Experiments – Expedition 21 and 22 (continued)

Acronym	Title	Agency	Category	Summary	Facility	Principal Investigator	ISS/ Sortie	Ops Location
Neurospat	Effect of Gravitational Context on EEG Dynamics: A Study of Spatial Cognition, Novelty Processing and Sensorimotor Integration	ESA	Human Research and Countermeasures Development	Effect of Gravitational Context on EEG Dynamics: A Study of Spatial Cognition, Novelty Processing and Sensorimotor Integration (Neurospat) consists of two investigational protocols. One protocol will test prefrontal brain functions and spatial cognition and the other will determine the effect of gravitational context on brain processing	European Physiology Module (EPM)	L. Balazs, Institute for Psychology of the Hungarian Academy of Sciences, Budapest, Hungary, Guy Cheron, Universite Libre de Bruxelles, Brussels, Belgium	ISS	Columbus
ERB-2	Erasmus Recording Binocular-2	ESA	Technology Development	Erasmus Recording Binocular-2 (ERB-2) is a three-dimensional (3-D) video camera that is used to take images of the environment onboard the International Space Station (ISS). These images are used to create an accurate three-dimensional map of the interior of ISS	European Drawer Rack (EDR)	Massimo Sabbatini, European Space Research and Technology Center, Noordwijk, The Netherlands	ISS	Columbus
VO_2Max	Evaluation of Maximal Oxygen Uptake and Submaximal Estimates of VO2max Before, During, and After Long Duration International Space Station Missions	NASA	Human Research and Countermeasures Development	Evaluation of Maximal Oxygen Uptake and Submaximal Estimates of VO2max Before, During, and After Long Duration International Space Station Missions (VO2max) will document changes in maximum oxygen uptake for crewmembers onboard the International Space Station (ISS) on long-duration missions, greater than 90 days. This investigation will establish the characteristics of VO2max during flight and assess the validity of the current methods of tracking aerobic capacity change during and following the ISS missions	No Facility	Alan D. Moore, Jr., Ph.D., Johnson Space Center, Houston, TX	ISS	Destiny

International Space Station Experiments – Expedition 21 and 22 (continued)

Acronym	Title	Agency	Category	Summary	Facility	Principal Investigator	ISS/ Sortie	Ops Location
Focus	Foam Casting and Utilization in Space	ESA	Physical Sciences in Microgravity	Foam Casting and Utilization in Space (FOCUS) will provide nanoparticle stabilized foam generation and bubble nucleation and development in microgravity	BioLab	Pal Barczy, Admatis Ltd., Miskolc, Hungary	ISS	Columbus
Functional Task Test	Functional Task Test: Physiological Factors Contributing to Changes in Postflight Functional Performance	NASA	Human Research and Countermeasures Development	Functional Task Test: Physiological Factors Contributing to Changes in Postflight Functional Performance (FTT) tests astronauts on an integrated suite of functional and physiological tests before and after short and long-duration space flight. The study will identify critical mission tasks that may be impacted, map physiological changes to alterations in physical performance and aid in the design of countermeasures that specifically target the physiological systems responsible for impaired functional performance	No Facility	Jacob Bloomberg, Ph.D., Johnson Space Center, Houston, TX	Pre/ Postflight	Ground
Vascular	Health Consequences of Long-Duration Flight	CSA	Human Research and Countermeasures Development	Health Consequences of Long-Duration Flight (Vascular) will provide an integrated approach to gain knowledge concerning the mechanisms responsible for changes that will occur in vascular structure with long-duration space flight and to link this with their functional and health consequences	Human Research Facility-2 (HRF-2)	Richard Lee Hughson, Ph.D., University of Waterloo, Waterloo, Ontario, Canada	ISS	Columbus
HREP-HICO	HICO and RAIDS Experiment Payload - Hyperspectral Imager for the Coastal Ocean	NASA	Observing the Earth and Educational Activities	HICO and RAIDS Experiment Payload - Hyperspectral Imager for the Coastal Ocean (HREP-HICO) will operate a visible and near-infrared (VNIR) Maritime Hyperspectral Imaging (MHSI) system, to detect, identify and quantify coastal geophysical features from the International Space Station	No Facility	Mike Corson, Naval Research Laboratory, Washington, DC	ISS	External

International Space Station Experiments – Expedition 21 and 22 (continued)

Acronym	Title	Agency	Category	Summary	Facility	Principal Investigator	ISS/ Sortie	Ops Location
HREP-RAIDS	HICO and RAIDS Experiment Payload - Remote Atmospheric and Ionospheric Detection System	NASA	Technology Development	The HICO and RAIDS Experiment Payload - Remote Atmospheric and Ionospheric Detection System (HREP-RAIDS) experiment will provide atmospheric scientists with a complete description of the major constituents of the thermosphere (layer of the Earth's atmosphere) and ionosphere (uppermost layer of the Earth's atmosphere), global electron density profiles at altitudes between 100 - 350 kilometers	No Facility	Scott Budzien, Naval Research Laboratory, Washington, DC	ISS	External
JAXA-PCG	High Quality Protein Crystal Growth Experiment	JAXA	Applied Research	JAXA PCG seeks to grow crystals of biological macromolecules by the counter diffusion technique. The main scientific objective of the JAXA PCG experiment is to produce fine-quality protein crystals in microgravity.The crystals will be grown in the JAXA PCG Canister using the Protein Crystallization Research Facility (PCRF) in the RYUTAI rack. The space-grown crystals will be applied to structural biology and pharmaceutical activities.This experiment is a JAXA-ROSCOSMOS science collaboration. JAXA is performing the onboard experiments, including samples from the Russian research group, and OSCOSMOS is operating the launch and retrieval	Ryutai	Tomoyuki Kobayashi, Masaru Sato, Satoshi Sano, JAXA	ISS	Kibo
	Identifikatsiya	RSA	Technical Studies	Identification of disturbance sources when the microgravity conditions on the ISS are disrupted				
	Impulse (Pulse)	RSA	Geophysical	Ionospheric sounding by pulsed plasma sources				

International Space Station Experiments – Expedition 21 and 22 (continued)

Acronym	Title	Agency	Category	Summary	Facility	Principal Investigator	ISS/ Sortie	Ops Location
RadSilk	Integrated Assessment of Long-term Cosmic Radiation Through Biological Responses of the Silkworm, Bombyx mori, in Space	JAXA	Life Science	Rad Silk will examine the effects of space radiation and microgravity on silkworm eggs. The silkworm egg is assumed to have a highly sensitive stage during radiation exposure after diapause, since white spots are observed on silkworm caterpillars when exposed to radiation during their egg stages. The eggs will be placed in egg cases. After the launch, at 4°C (39.2°F), the eggs in the egg cases will be kept cool in the MELFI at 2°C (35.6°F) for diapause. Before returning to the ground, the eggs will be incubated at 20°C (68°F) for 6 days using the CBEF, then stored in the MELFI at 2°C (35.6°F). Some eggs will be frozen at -95°C (-139°F). As the control sample, one egg case will remain at 2°C (35.6°F) without incubation. On the ground, the returned eggs will be germinated, and the effects of radiation will be analyzed with a mutation assay, a genetic assay, and biochemical assays	Saibo	Toshiharu Furusawa, Kyoto Institute of Technology University	ISS	Kibo
InSPACE-3	Investigating the Structure of Paramagnetic Aggregates from Colloidal Emulsions - 3	NASA	Physical Sciences in Microgravity	Investigating the Structure of Paramagnetic Aggregates from Colloidal Emulsions - 3 (InSPACE-3) will study the particle dynamics of magnetorheological fluids (fluids that change properties in response to magnetic fields) that can be used to improve or develop new brake systems and robotics	Microgravity Sciences Glovebox (MSG)	Eric M. Furst, Ph.D., University of Delaware, Newark, DE	ISS	Columbus
	Izgib	RSA	Technical Studies	Study of the relationship between the onboard systems operating modes and ISS flight conditions				

International Space Station Experiments – Expedition 21 and 22 (continued)

Acronym	Title	Agency	Category	Summary	Facility	Principal Investigator	ISS/ Sortie	Ops Location
Dewey's Forest	Japan Aerospace Exploration Agency - Education Payload Observation "Dewey's Forest"	JAXA	Educational payload Observation	Dewey's Forest is intended to show how gravity controls the law of nature and influences our way of thinking. After cultivating four Plant Units (Seiryu, Byakko, Suzaku, and Genbu) for 2 months, crew members create a garden and talk about it while taking video. This is a catalyst to rediscover the relationship between plants and humankind, and the history of gardening and nature	No Facility	Shiro matsui, Kyoto City University of Arts	ISS	Kibo
	Kon'yugatsiya (Conjugation)	RSA	Biotechnology	Working through the process of genetic material transmission using bacteria conjugation method				
	Kristallizator (Crystallizer)	RSA	Technology & Material Science	Biological macromolecules crystallization and obtaining bio-crystal films under microgravity conditions				
	Laktolen	RSA	Biotechnology	Effect produced by space flight factors on Laktolen producing strain				
LES - II/III	Lessons from Space	ESA	Observing the Earth and Educational Activities	Lessons from Space (LES) are educational activities that will demonstrate basic principles of science, mathematics, technology, engineering and geography. These activities are videotaped and then used in classrooms across Europe	No Facility		ISS	Columbus

International Space Station Experiments – Expedition 21 and 22 (continued)

Acronym	Title	Agency	Category	Summary	Facility	Principal Investigator	ISS/ Sortie	Ops Location
SpaceSeed	Life Cycle of Higher Plants under Microgravity Conditions	JAXA	Life Science	Space Seed will investigate the role of gravity in regulating the developmental processes of higher plants, using Arabidopsis thaliana, also known as Arabidopsis or thale cress. The seeds will be planted in the plant experiment sample chambers in the Plant Experiment Unit (PEU) before launch. On orbit, the plants in the eight PEUs will be incubated in the Cell Biology Experiment Facility (CBEF) in the SAIBO rack and will be observed using the PEU CCD camera. After about 30 days of incubation, half of the germinated samples (stems, leaves, and roots) will be harvested, fixed, and stored in the Minus Eighty-degree Laboratory Freezer for the ISS (MELFI) at 2°C (35.6°F) and -95°C (-139°F). A quarter of the other half will be harvested after an additional 30 days of incubation, then fixed and refrigerated in the MELFI. The rest of the samples, including seeds produced in microgravity, will also be refrigerated. All stored samples will be returned to the ground to be analyzed morphologically and genetically	Saibo	Seiichiro Kamisaka, Toyama University	ISS	Kibo

International Space Station Experiments – Expedition 21 and 22 (continued)

Acronym	Title	Agency	Category	Summary	Facility	Principal Investigator	ISS/ Sortie	Ops Location
Card	Long Term Microgravity: A Model for Investigating Mechanisms of Heart Disease with New Portable Equipment	ESA	Human Research and Countermeasures Development	The Long Term Microgravity: A Model for Investigating Mechanisms of Heart Disease with New Portable Equipment (Card) experiment studies blood pressure decreases when the human body is exposed to microgravity. In order to increase the blood pressure to the level it was on Earth, salt is added to the crewmembers' diet. To monitor this, blood pressure readings and urine samples are performed at different intervals during the mission	Human Research Facility-2 (HRF-2)	Peter Norsk, M.D. University of Copenhagen, Copenhagen, Denmark	ISS	Columbus
MISSE-7	Materials International Space Station Experiment - 7	NASA	Technology Development	Materials International Space Station Experiment – 7 (MISSE-7) is a test bed for materials and coatings attached to the outside of the International Space Station (ISS) being evaluated for the effects of atomic oxygen, ultraviolet, direct sunlight, radiation, and extremes of heat and cold. This experiment allows the development and testing of new materials to better withstand the rigors of space environments. Results will provide a better understanding of the durability of various materials when they are exposed to the space environment with applications in the design of future spacecraft	No Facility	Robert Walters, Ph.D., Naval Research Laboratory, Washington, DC	ISS	External

International Space Station Experiments – Expedition 21 and 22 (continued)

Acronym	Title	Agency	Category	Summary	Facility	Principal Investigator	ISS/ Sortie	Ops Location
MSL-CETSOL and MICAST	Materials Science Laboratory - Columnar-to-Equiaxed Transition in Solidification Processing and Microstructure Formation in Casting of Technical Alloys under Diffusive and Magnetically Controlled Convective Conditions	NASA	Physical Sciences in Microgravity	The Materials Science Laboratory - Columnar-to-Equiaxed Transition in Solidification Processing and Microstructure Formation in Casting of Technical Alloys under Diffusive and Magnetically Controlled Convective Conditions (MSL-CETSOL and MICAST) are two investigations that support research into metallurgical solidification, semiconductor crystal growth (Bridgman and zone melting), and measurement of thermo-physical properties of materials. This is a cooperative investigation with the European Space Agency (ESA) and National Aeronautics and Space Administration (NASA) for accommodation and operation aboard the International Space Station (ISS)	Materials Science Research Rack (MSRR)	Charles-Andre Gandin, Ph.D., Ecole de Mines de Paris, ARMINES-CEMEF, Sophia Antipolis, France (CETSOL); Lorenz Ratke, Prof., German Aerospace Center, Cologne, Germany (MICAST)	ISS	Destiny
	Matryeshka-R	RSA	Biomedical	Study of radiation environment dynamics along the ISS RS flight path and in ISS compartments, and dose accumulation in anthropomorphous phantom, located inside and outside ISS				
MAUI	Maui Analysis of Upper Atmospheric Injections	NASA	Technology Development	Maui Analysis of Upper Atmospheric Injections (MAUI) will observe the Space Shuttle engine exhaust plumes from the Maui Space Surveillance Site in Hawaii. The observations will occur when the Space Shuttle fires its engines at night or twilight. A telescope and all-sky imagers will take images and data while the Space Shuttle flies over the Maui site. The images will be analyzed to better understand the interaction between the spacecraft plume and the upper atmosphere of Earth	No Facility	Rainer A. Dressler, Ph.D., Hanscom Air Force Base, Lexington, MA	Sortie	Shuttle

International Space Station Experiments – Expedition 21 and 22 (continued)

Acronym	Title	Agency	Category	Summary	Facility	Principal Investigator	ISS/ Sortie	Ops Location
3D-Space	Mental Representation of Spatial Cues During Space Flight	ESA	Human Research and Countermeasures Development	The purpose of the Mental Representation of Spatial Cues During Space Flight (3D-Space) experiment is to investigate the effects of exposure to microgravity on the mental representation of spatial cues by astronauts during and after space flight. The absence of the gravitational frame of reference during spaceflight could be responsible for disturbances in the mental representation of spatial cues, such as the perception of horizontal and vertical lines, the perception of objects' depth, and the perception of targets' distance	European Physiology Module (EPM)	Eric M. Furst, Ph.D., University of Delaware, Newark, DE	ISS	Columbus
MDS	Mice Drawer System	NASA	Biological Sciences in Microgravity	Mice Drawer System(MDS) is an Italian Space Agency investigation that will use a validated mouse model to investigate the genetic mechanisms underlying bone mass loss in microgravity. Research conducted with the MDS is an analog to the human research program, which has the objective to extend the human presence safely beyond low Earth orbit	Express Rack	Mice Drawer System (MDS) is an Italian Space Agency investigation that will use a validated mouse model to investigate the genetic mechanisms underlying bone mass loss in microgravity. Research conducted with the MDS is an analog to the human research program, which has the objective to extend the human presence safely beyond low Earth orbit	ISS	Kibo

International Space Station Experiments – Expedition 21 and 22 (continued)

Acronym	Title	Agency	Category	Summary	Facility	Principal Investigator	ISS/ Sortie	Ops Location
MAMS/SAMS-II	Microgravity Acceleration Measurement System (MAMS) and Space Acceleration Measurement System-II (SAMS-II)	NASA	Technology Development	Microgravity Acceleration Measurement System (MAMS) and Space Acceleration Measurement System-II (SAMS-II) measures the International Space Station (ISS) vibrational accelerations during specific periods of operations, as requested. MAMS and SAMS-II will further the understanding of accelerations resulting from physical disturbances on the ISS. MAMS and SAMS-II also, helps characterize accelerations that may affect the ISS experiments	Express Rack	William Foster, Glenn Research Center, Cleveland, OH	ISS	Destiny
MAXI	Monitor of All-sky X-ray Image	JAXA	Astrophysics/Earth Observation	MAXI is an external observatory operated on the EF. MAXI was launched and installed on Kibo's EF during the STS-127 Mission. MAXI has been and will be monitoring X-ray variability for more than 1,000 X-ray sources covering the entire sky. MAXI consists of two types of highly sensitive X-ray slit cameras, the Gas Slit Camera (GSC) and the Solid-state Slit Camera (SSC). The GSC uses a gas proportional counter for X-ray detection, and the SSC uses Peltier-cooled CCDs for X-ray detection. MAXI is equipped with 12 GSCs and 2 SSCs. The discoveries of X-ray novae and gamma-ray bursts with MAXI are to be distributed worldwide via the Internet, so that astronomical observatories may conduct follow-up and detailed observations with telescopes or astronomical satellites	JEM-EF	Masaru Matsuoka, Japan Aerospace Exploration Agency	ISS	External

International Space Station Experiments – Expedition 21 and 22 (continued)

Acronym	Title	Agency	Category	Summary	Facility	Principal Investigator	ISS/ Sortie	Ops Location
MDCA-FLEX-2	Multi-User Droplet Combustion Apparatus - Flame Extinguishment and Fundamental Studies in Droplet Combustion in Microgravity - 2	NASA	Technology Development	Multi-User Droplet Combustion Apparatus - Flame Extinguishment and Fundamental Studies in Droplet Combustion in Microgravity - 2 (FLEX-2) investigates several fundamental aspects of droplet combustion in microgravity. The objective of this research is to determine the properties of flame extinction boundaries of combustibles in microgravity	Combustion Integrated Rack (CIR)	Forman A. Williams, Ph.D., University of California, San Diego, San Diego, CA	ISS	Destiny
MDCA-FLEX	Multi-User Droplet Combustion Apparatus - FLame Extinguishment Experiment	NASA	Technology Development	Multi-User Droplet Combustion Apparatus - FLame Extinguishment Experiment (MDCA-FLEX) will assess the effectiveness of fire suppressants in microgravity and quantify the effect of different possible crew exploration atmospheres on fire suppression. The goal of this research is to provide definition and direction for large scale fire suppression tests and selection of the fire suppressant for next generation crew exploration vehicles	Combustion Integrated Rack (CIR)	Forman A. Williams, Ph.D., University of California, San Diego, San Diego, CA	ISS	Destiny

International Space Station Experiments – Expedition 21 and 22 (continued)

Acronym	Title	Agency	Category	Summary	Facility	Principal Investigator	ISS/ Sortie	Ops Location
Myco 1	Mycological evaluation of crew member exposure to ISS ambient air	JAXA	Human Spaceflight Technology Development	Myco1 will investigate and evaluate the risk of inhalation and adhesion of microorganisms to astronauts who are exposed to ambient air on board the ISS during long-duration missions. The ultimate goal of this experiment is to develop medically effective countermeasures to protect ISS crew members living in a closed environment of microgravity against the living environmental risks caused by microorganisms. Normal human flora is thought to be strongly affected by the living environment. The environment on board the ISS would progressively be contaminated by microorganisms since various microorganisms are brought up to the station along with commodities and or crew members themselves. Some of them are possible allergens in our living environment. To mitigate the risk of microbial contamination on board, it is necessary to take some countermeasures against microbial contaminations	No Facility	Chiaki MUKAI, Japan	ISS	Kibo

International Space Station Experiments – Expedition 21 and 22 (continued)

Acronym	Title	Agency	Category	Summary	Facility	Principal Investigator	ISS/ Sortie	Ops Location
Repositiory	National Aeronautics and Space Administration Biological Specimen Repository	NASA	Human Research and Countermeasures Development	The National Aeronautics and Space Administration Biological Specimen Repository (Repository) is a storage bank that is used to maintain biological specimens over extended periods of time and under well-controlled conditions. Biological samples from the International Space Station (ISS), including blood and urine, will be collected, processed and archived during the preflight, inflight and postflight phases of ISS missions. This investigation has been developed to archive biosamples for use as a resource for future space flight related research	Human Research Facility-2 (HRF-2)	Kathleen A. McMonigal, M.D. (Curator), Johnson Space Center, Houston, TX	ISS	Columbus
NLP-Cells-2	National Lab Pathfinder - Cells-2	NASA	Biological Sciences in Microgravity	National Lab Pathfinder-Cells-2 (NLP-Cells-2) experiment assesses the effects of space flight on the virulence and gene expression of specific virulence factors of *S. pneumonia*		David W. Niesel, Ph.D., University of Texas Medical Branch at Galveston, Galveston, TX	Sortie	
NLP-Cells-3	National Lab Pathfinder - Cells-3	NASA	Biological Sciences in Microgravity	National Lab Pathfinder-Cells-3 (NLP-Cells-3) experiment examines the effects of space flight on normal cellular replication and differentiation			Sortie	

International Space Station Experiments – Expedition 21 and 22 (continued)

Acronym	Title	Agency	Category	Summary	Facility	Principal Investigator	ISS/ Sortie	Ops Location
NLP-Vaccine-6	National Lab Pathfinder – Vaccine – 6	NASA	Biological Sciences in Microgravity	National Lab Pathfinder – Vaccine – 6 (NLP-Vaccine-6) is part of a suite of investigations serving as a pathfinder for the use of the International Space Station as a National Laboratory after ISS assembly is complete. It contains several different pathogenic (disease causing) organisms. This research is investigating the use of space flight to develop potential vaccines for the prevention of different infections caused by these pathogens on Earth and in microgravity	GAP	Timothy Hammond, M.B.B.S., Durham Veterans Affairs Medical Center, Durham, NC	Sortie	Shuttle
NLP-Vaccine-7	National Lab Pathfinder – Vaccine – 7	NASA	Biological Sciences in Microgravity	National Lab Pathfinder – Vaccine – 7 (NLP-Vaccine-7) is part of a suite of investigations serving as a pathfinder for the use of the International Space Station as a National Laboratory after ISS assembly is complete. It contains several different pathogenic (disease causing) organisms. This research is investigating the use of space flight to develop potential vaccines for the prevention of different infections caused by these pathogens on Earth and in microgravity	GAP	Timothy Hammond, M.B.B.S., Durham Veterans Affairs Medical Center, Durham, NC	Sortie	Shuttle
Immuno	Neuroendocrine and Immune Responses in Humans During and After Long Term Stay at ISS	ESA	Human Research and Countermeasures Development	Neuroendocrine and Immune Responses in Humans During and After Long Term Stay at ISS (Immuno) will provide an understanding for the development of pharmacological tools to counter unwanted immunological side effects during long-duration missions in space	Human Research Facility-2 (HRF-2)	Alexander Chouker, M.D., University of Munich, Munich, Germany	ISS	Columbus

International Space Station Experiments – Expedition 21 and 22 (continued)

Acronym	Title	Agency	Category	Summary	Facility	Principal Investigator	ISS/ Sortie	Ops Location
Nutrition	Nutritional Status Assessment	NASA	Human Research and Countermeasures Development	Nutritional Status Assessment (Nutrition) is the most comprehensive inflight study done by NASA to date of human physiologic changes during long-duration space flight; this includes measures of bone metabolism, oxidative damage, nutritional assessments, and hormonal changes. This study will impact both the definition of nutritional requirements and development of food systems for future space exploration missions to the Moon and Mars. This experiment will also help to understand the impact of countermeasures (exercise and pharmaceuticals) on nutritional status and nutrient requirements for astronauts	Human Research Facility-2 (HRF-2)	Scott M. Smith, Ph.D., Johnson Space Center, Houston, TX	ISS	Columbus
	OChB	RSA	Biotechnology	Effect produced by SFFs on strain producing superoxidodismutase (SOD)				
Otolith	Otolith Assessment During Postflight Re-adaptation	ESA	Human Research and Countermeasures Development	Otolith Assessment During Postflight Re-adaptation (Otolith) will assess otolith (small bones of the inner ear) function in crewmembers preflight and postflight	No Facility	Andrew H. Clarke, Ph.D., Charite Medical School, Berlin, Germany	Pre/ Postflight	Ground

International Space Station Experiments – Expedition 21 and 22 (continued)

Acronym	Title	Agency	Category	Summary	Facility	Principal Investigator	ISS/ Sortie	Ops Location
PADLES	Passive Dosimeter for Lifescience Experiment in Space	JAXA	Human Spaceflight Technology Development	Area PADLES surveys the space radiation environment inside Kibo using the PADLES analysis system and passive and integrating dosimeter developed by JAXA for measuring absorbed dose, LET distributions, and dose equivalents. Ultimate goals of this program are to support risk assessment and dose management for Japanese astronauts, and to update radiation assessment models for human spaceflight in the next generation. There are 17 Area PADLES dosimeters installed in Kibo's Pressurized Module (PM) and Kibo's Experiment Logistics Module-Pressurized Section (ELM-PS). They are replaced during each space station expedition. This series of experiments began from Expedition 17	No Facility	Keiji Murakami,Aiko Nagamatsu, Japan Aerospace Exploration Agency	ISS	Kibo
	Pilot	RSA	Biomedical	Researching for individual features of state psychophysiological regulation and crewmembers professional activities during long space flights				
	Plazmida	RSA	Biomedical	Investigation of microgravity effect on the rate of transfer and mobilization of bacteria plasmids				
	Pneumocard	RSA	Biomedical	Study of space flight factors impacts on vegetative regulation of blood circulation, respiration and contractile heart function during long space flights				
	Poligen	RSA	Biomedical	Detection of genotypic features (experimental object – Drozophila midge), determining individual characteristics of resistance to the long-duration flight factors				

International Space Station Experiments – Expedition 21 and 22 (continued)

Acronym	Title	Agency	Category	Summary	Facility	Principal Investigator	ISS/ Sortie	Ops Location
Nanoskeleton 1	Production of high performance nanomaterials "Nanoskeleton" in microgravity	JAXA	Applied Research	Nanoskeleton1 will quantitatively evaluate gravitational effects on a new nanomaterial during its chemical reaction process. The nanoskeleton, a coined word that is defined as a functional nanoframework, is expected to be a highly functional material because of its high surface area. The high surface area is due to the pore structure and the functionality of framework itself. The TiO2 nanoskeleton, especially, has potential as a high-performance photocatalyst and highly efficient dye-sensitized solar cell. The TiO2 nanoskeleton is synthesized from a mixture of CTAB surfactant solution and TiOSO4-H2SO4 solution at 40C or 3 days under isothermal conditions. The nanoskeleton experiment will be performed using the CBEF in the SAIBO rack. Oil will be used to enlarge the pore size of the honeycomb structure of the TiO2 nanoskeleton so that flotation of the oil can be suppressed in microgravity. All of the experiment samples will be retrieved and evaluated on the ground. The retrieved samples will be evaluated to clarify convective flow, flotation, and sedimentation effects on the sample quality. During the experiment, temperature and downlinked images of the samples will be monitored. The results of this study may enable the synthesizing of nanoskeleton materials on a mass roduction scale, and eventually, commercial realization of nanoskeleton materials as photocatalytic particles and so on. This experiment will be performed under JAXA's ISS applied research center promotion program, which is a joint versity/Industry/Government research project	Saibo	Masahiko Abe, Tokyo University of Science	ISS	Kibo

International Space Station Experiments – Expedition 21 and 22 (continued)

Acronym	Title	Agency	Category	Summary	Facility	Principal Investigator	ISS/ Sortie	Ops Location
Reaction Self Test	Psychomotor Vigilance Self Test on the International Space Station	NASA	Human Research and Countermeasures Development	The Psychomotor Vigilance Self Test on the International Space Station (Reaction Self Test) is a portable 5-minute reaction time task that will allow the crewmembers to monitor the daily effects of fatigue on performance while on board the International Space Station	No Facility	David F. Dinges, Ph.D., University of Pennsylvania School of Medicine, Philadelphia, PA	ISS	Destiny
RAMBO-2	Ram Burn Observations - 2	NASA	Technology Development	Ram Burn Observations - 2 (RAMBO-2) is an experiment in which the Department of Defense uses a satellite to observe space shuttle orbital maneuvering system engine burns. Its purpose is to improve plume models, which predict the direction the plume, or rising column of exhaust, will move as the shuttle maneuvers on orbit. Understanding the direction in which the spacecraft engine plume, or exhaust flows could be significant to the safe arrival and departure of spacecraft on current and future exploration missions	No Facility	William L. Dimpfl, Ph.D., Aerospace Corporation, Los Angeles, CA	Sortie	Shuttle
	Rasteniya	RSA	Biomedical	Study of the space flight effect on the growth and development of higher plants				
	Relaksatsiya	RSA	Geophysical	Study of chemiluminescent chemical reactions and atmospheric light phenomena that occur during high-velocity interaction between the exhaust products from spacecraft propulsion systems and the Earth atmosphere at orbital altitudes and during the entry of space vehicles into the Earth upper atmosphere				

International Space Station Experiments – Expedition 21 and 22 (continued)

Acronym	Title	Agency	Category	Summary	Facility	Principal Investigator	ISS/ Sortie	Ops Location
CERISE	RNA interference and protein phosphorylation in space environment using the nematode Caenorhabditis elegans	JAXA	Life Science	CERISE will examine RNA activity in microgravity, and also investigate protein phosphorylation and signal transduction, which are involved in muscle formation, using a model specimen, C. elegans. RNA interference is a useful technique for silencing specific gene expression with sequence homology, which presently applies to not only basic life science study but also several clinical examinations. From the experiment, the first verification of RNA interference activity in space and signal transduction by microgravity will be clarified	Saibo	Atsushi Higashitani , Tohoku University	ISS	Kibo
	Rusalka	RSA	Study of Earth natural resources and ecological monitoring	Testing of the procedure to determine the carbon dioxide and methane content in the Earth atmosphere to understand a role of natural processes in human activity				
SODI-IVIDIL	Selectable Optical Diagnostics Instrument – Influence of Vibration on Diffusion of Liquids	ESA	Physical Sciences in Microgravity	Selectable Optical Diagnostics Instrument – Influence of Vibration on Diffusion of Liquids (SODI-IVIDIL) will study the influence of controlled vibration stimulus (slow shaking) on diffusion between different liquids in absence of convection induced by the gravity field. Such investigation will help scientists to model numerically this physical phenomenon	Microgravity Sciences Glovebox (MSG)	Valentina Shevtsova, PhD, Microgravity Research Center, University of Brussels, Belgium	ISS	Columbus

International Space Station Experiments – Expedition 21 and 22 (continued)

Acronym	Title	Agency	Category	Summary	Facility	Principal Investigator	ISS/ Sortie	Ops Location
SODI-DSC	Selectable Optical Diagnostics Instrument–Diffusion and Soret Coefficient	ESA	Physical Sciences in Microgravity	The Selectable Optical Diagnostics Instrument–Diffusion and Soret Coefficient (SODI-DSC) experiment will study diffusion in six different liquids over time in the absence of convection induced by the gravity field	Microgravity Sciences Glovebox (MSG)	Stefan Van Vaerenbergh, Ph.D., Microgravity Research Center, University of Brussels, Brussels, Belgium	ISS	Columbus
SNFM	Serial Network Flow Monitor	NASA	Technology Development	Using a commercial software CD and minimal up-mass, Serial Network Flow Monitor (SNFM) monitors the payload Local Area Network (LAN) to analyze and troubleshoot LAN data traffic. Validating LAN traffic models may allow for faster and more reliable computer networks to sustain systems and science on future space missions	No Facility	Carl Konkel, Boeing, Houston, TX	ISS	Destiny
	Seyener	RSA	Study of Earth natural resources and ecological monitoring	Experimental methodses of the interaction of the crews to cosmic station with court Fishing in process of searching for and mastering commercial-productive region of the World ocean				
SEITE	Shuttle Exhaust Ion Turbulence Experiments	NASA	Technology Development	Shuttle Exhaust Ion Turbulence Experiments (SEITE) will use space-based sensors to detect the ionospheric turbulence inferred from the radar observations from a previous Space Shuttle Orbital Maneuvering System (OMS) burn experiment using ground-based radar	No Facility	Paul A. Bernhardt, Ph.D., Naval Research Laboratory, Washington DC	Sortie	Shuttle

International Space Station Experiments – Expedition 21 and 22 (continued)

Acronym	Title	Agency	Category	Summary	Facility	Principal Investigator	ISS/ Sortie	Ops Location
SIMPLEX	Shuttle Ionospheric Modification with Pulsed Localized Exhaust Experiments	NASA	Technology Development	The Shuttle Ionospheric Modification with Pulsed Localized Exhaust Experiments (SIMPLEX) will investigate plasma turbulence driven by rocket exhaust in the ionosphere using ground-based radars	No Facility	Paul A. Bernhardt, Ph.D., Naval Research Lab, Washington DC	Sortie	Shuttle
Sleep-Short	Sleep-Wake Actigraphy and Light Exposure During Spaceflight - Short	NASA	Human Research and Countermeasures Development	Sleep-Wake Actigraphy and Light Exposure During Spaceflight - Short (Sleep-Short) will examine the effects of space flight on the sleep of the astronauts during space shuttle missions. Advancing state-of-the-art technology for monitoring, diagnosing and assessing treatment of sleep patterns is vital to treating insomnia on Earth and in space	Unknown	Charles A. Czeisler, M.D., Ph.D. and Laura K. Barger, Ph.D., Brigham and Women's Hospital, Harvard Medical School, Boston, MA	Sortie	Shuttle
Sleep-Long	Sleep-Wake Actigraphy and Light Exposure During Spaceflight-Long	NASA	Human Research and Countermeasures Development	Sleep-Wake Actigraphy and Light Exposure During Spaceflight-Long (Sleep-Long) will examine the effects of space flight and ambient light exposure on the sleep-wake cycles of the crewmembers during long-duration stays on the space station	Human Research Facility-1 (HRF-1)	Charles A. Czeisler, M.D., Ph.D., Brigham and Women's Hospital, Harvard Medical School, Boston, MA	ISS	Columbus
	SLS (System laser relationship)	RSA	Technical Studies	Otrabotka systems lazer relationship for issue greater array to information from target equipment ISS				
Solar-SOLACES	SOLar Auto-Calibrating EUV/UV Spectrophotometers	ESA	External Space Exposure and Sun Observation	SOLar Auto-Calibrating EUV/UV Spectrophotometers (SOLACES) measures the extreme-ultraviolet/ultraviolet (EUV/UV) spectrum (17 nm to 220 nm) with moderate spectral resolution	Solar	G. Schmidtke, Fraunhofer-Institut for Physikalische Messtechnik, Freiburg, Germany	ISS	External

International Space Station Experiments – Expedition 21 and 22 (continued)

Acronym	Title	Agency	Category	Summary	Facility	Principal Investigator	ISS/ Sortie	Ops Location
Solar-SOLSPEC	SOLar SPECtral Irradiance Measurements	ESA	External Space Exposure and Sun Observation	SOLar SPECtral Irradiance Measurements (SOLSPEC) will operate at high spectral resolution in the range 180 to 3000 nm, with an accuracy of 2% in ultravaiolet (UV) and 1% in visible and infrared (IR)	Solar	M. G. Thuillier, Centre National de la Recherche Scientifique, Verrieres le Buisson, France	ISS	External
Solar-SOVIM	SOLar Variable and Irradiance Monitor	ESA	External Space Exposure and Sun Observation	SOLar Variable and Irradiance Monitor (SOVIM) will measure solar spectral irradiance via filter-radiometers in the near-UV (402 nanometers), visible (500 nanometers) and near-IR (862 nanometers) regions, together with the total solar irradiance, using two types of radiometers covering the range from 200 nanometers to 100 micrometers	Solar	Claus Froehlich, Ph.D., Physikalisch-Meteorologisches Observatorium-World Radiation Centre, Davos, Switzerland	ISS	External
	Sonokard	RSA	Biomedical	Integrated study of physiological functions during sleep period throughout a long space flight				

International Space Station Experiments – Expedition 21 and 22 (continued)

Acronym	Title	Agency	Category	Summary	Facility	Principal Investigator	ISS/ Sortie	Ops Location
SpaceDRUMS	Space Dynamically Responding Ultrasonic Matrix System	NASA	Technology Development	Space Dynamically Responding Ultrasonic Matrix System (SpaceDRUMS) comprises a suite of hardware that enables containerless processing (samples of experimental materials can be processed without ever touching a container wall). Using a collection of 20 acoustic beam emitters, SpaceDRUMS can completely suspend a baseball-sized solid or liquid sample during combustion or heat-based synthesis. Because the samples never contact the container walls, materials can be produced in microgravity with an unparalleled quality of shape and composition. The ultimate goal of the SpaceDRUMS hardware is to assist with the development of advanced materials of a commercial quantity and quality, using the space-based experiments to guide development of manufacturing processes on Earth	Express Rack	Jacques Guigne, Ph.D., Guigne Space Systems, Incorporated, Paradise, Newfoundland, Canada	ISS	Kibo

International Space Station Experiments – Expedition 21 and 22 (continued)

Acronym	Title	Agency	Category	Summary	Facility	Principal Investigator	ISS/ Sortie	Ops Location
SEDA-AP	Space Environment Data Acquisition Equipment - Attached Payload	JAXA	Astrophysics/Earth Observation	SEDA-AP is an external experiment conducted on the Exposed Facility (EF). SEDA-AP was launched and installed on Kibo's Exposed Facility (EF) during the STS-127 Mission, and it has been collecting space environment data ever since. It consists of common bus equipment, a mast that extends the neutron monitor sensor into space, and seven measurement units that measure space environment data. The measurement units are (1) Neutron Monitor (NEM), (2) Heavy Ion Telescope (HIT), (3) Plasma Monitor (PLAM), (4) Standard Dose Monitor (SDOM), (5) Atomic Oxygen Monitor (AOM), (6) Electronic Device Evaluation Equipment (EDEE), and (7) Micro-Particles Capture (MPAC) and Space Environment Exposure Device (SEED)	JEM-EF	Tateo Goka, Japan Aerospace Exploration Agency	ISS	External

International Space Station Experiments – Expedition 21 and 22 (continued)

Acronym	Title	Agency	Category	Summary	Facility	Principal Investigator	ISS/ Sortie	Ops Location
Marangoni UVP	Spatio-tempral Flow Structure in Marangoni Convection	JAXA	Material Science	Marangoni UVP is one of JAXA's Marangoni experiments performed using the Fluid Physics Experiment Facility (FPEF) in the RYUTAI rack. The operational method is similar to that of the preceding Marangoni experiment: Chaos, Turbulence, and its Transition Process in Marangoni Convection (MEIS). During the experiment, the flow phenomenon will be investigated using a pulsed ultrasonic velocity profiler to obtain the spatiotemporal velocity field inside the fluid column, so as to investigate and clarify the flow transition scheme from laminar to turbulence through chaos. The experiment cell of this experiment will be delivered to the ISS on the HTV-1 Mission scheduled to launch to the ISS in September 2009	Ryutai	Yasushi Takeda, Hokkaido University	ISS	Kibo
Spinal Elongation	Spinal Elongation and its Effects on Seated Height in a Microgravity Environment	NASA	Human Research and Countermeasures Development	The purpose of the Spinal Elongation and its Effects on Seated Height in a Microgravity Environment (Spinal Elongation) study is to provide quantitative data as to the amount of change that occurs in the seated height due to spinal elongation in microgravity	Unknown	Sudhakar Rajulu, Ph.D., Johnson Space Center, Houston, TX	Sortie	Shuttle
	Sreda-ISS (Environment)	RSA	Technical Studies	Studying ISS characteristics as researching environment				
	Structure	RSA	Biotechnology	Reception high-quality crystal рекомбинантных squirrel				

International Space Station Experiments – Expedition 21 and 22 (continued)

Acronym	Title	Agency	Category	Summary	Facility	Principal Investigator	ISS/ Sortie	Ops Location
SMILES	Superconductining Submillimeter-wave Limb-emission Sounder	JAXA	Astrophysics/Earth Observation	SMILES is an external observatory to be operated on the EF. SMILES will be launched and installed during the HTV-1 Mission and aims at globally mapping stratospheric trace gases, using the most sensitive submillimeter receiver. A Superconductor/Insulator/ Superconductor (SIS) mixer in a dedicated cryostat with a mechanical cooler achieved SMILES's super-high sensitivity. SMILES will observe ozone depletion-related molecules, such as ClO, HCl, HO2, HNO3, BrO, and O3, in the frequency bands of 624.32 to 626.32 GHz and 649.12 to 650.32 GHz. A scanning antenna will cover tangent altitudes from 10 to 60 km every 53 seconds, while tracing the latitudes from 38°S to 65°N along its orbit. Due to its global coverage capability, SMILES can observe the low- and mid-latitudinal areas, as well as the Arctic peripheral region. SMILES data will enable us to investigate chlorine and bromine chemistry, and will provide a database for ozone variations in time and position around the upper troposphere and lower stratosphere	JEM-EF	Masato Shiotani, Kyoto University	ISS	External
	SVS (CBC)	RSA	Technology &Material Science	Self-propagating high-temperature fusion in space				

International Space Station Experiments – Expedition 21 and 22 (continued)

Acronym	Title	Agency	Category	Summary	Facility	Principal Investigator	ISS/ Sortie	Ops Location
SPHERES	Synchronized Position Hold, Engage, Reorient, Experimental Satellites	NASA	Technology Development	Synchronized Position Hold, Engage, Reorient, Experimental Satellites (SPHERES) are bowling-ball sized spherical satellites. They will be used inside the space station to test a set of well-defined instructions for spacecraft performing autonomous rendezvous and docking maneuvers. Three free-flying spheres will fly within the cabin of the Space Station, performing flight formations. Each satellite is self-contained with power, propulsion, computers and navigation equipment. The results are important for satellite servicing, vehicle assembly and formation flying spacecraft configurations	No Facility	David W. Miller, Ph.D., Massachusetts Institute of Technology, Cambridge, MA	ISS	Destiny
Tropi-II	The Analysis of a Novel Sensory Mechanism in Root Phototropism – II	NASA	Biological Sciences in Microgravity	The Analysis of a Novel Sensory Mechanism in Root Phototropism - II (Tropi-II) investigation will study the effects of various gravity levels on the responses of plants to light. The results of this experiment can lead to information to help in food production during future long-duration space exploration missions	Express Rack	John Z. Kiss, Ph.D., Miami University, Oxford, OH	ISS	Columbus

International Space Station Experiments – Expedition 21 and 22 (continued)

Acronym	Title	Agency	Category	Summary	Facility	Principal Investigator	ISS/ Sortie	Ops Location
BioRyhthms	The effect of long-term microgravity exposure on cardiac autonomic function by analyzing 24-hours electrocardiogram	JAXA	Human Spaceflight Technology Development	Biological Rhythms will record 24-hour continuous ECG data of ISS crew members using a commercial Holter ECG recorder. The recordings will be performed once pre-flight, three times in-flight and once post-flight. The in-flight data are downlinked to the ground after measurement. Using the data, cardiovascular and autonomic functions are analyzed. The data are also used to evaluate Biological Rhythm fluctuations and heart rest qualities of crew members while they sleep on board the ISS. The results of this experiment will be applied to improving health care technologies for the ISS crew	No Facility	Chiaki Mukai, Japan Aerospace Exploration Agency	ISS	Kibo
Thermolab	Thermoregulation in Humans During Long-term Space Flight	ESA	Human Research and Countermeasures Development	Thermoregulation in Humans During Long-term Space Flight (Thermolab) aims to investigate the thermoregulatory and cardiovascular adaptations during rest and exercise in the course of a long-term microgravity exposure. It is hypothesized that heat balance, thermoregulation and circadian temperature rhythms are altered in humans during long-term space flights. Since all physiological change factors are particularly cross-linked with each other in view of thermoregulation, an integrative study of the topic under microgravity conditions is mandatory	Human Research Facility-2 (HRF-2)		ISS	Columbus
	Tipologia	RSA	Biomedical	Researching for typological features of the activities of the ISS crews as operators activities in long term space flight phases				

International Space Station Experiments – Expedition 21 and 22 (continued)

Acronym	Title	Agency	Category	Summary	Facility	Principal Investigator	ISS/ Sortie	Ops Location
TAGES	Transgenic *Arabidopsis* Gene Expression System	NASA	Biological Sciences in Microgravity	Transgenic *Arabidopsis* Gene Expression System (TAGES) investigation is one in a pair of investigations that use the Advanced Biological Research System facility. TAGES uses *Arabidopsis thaliana*, thale cress, with sensor promoter-reporter gene constructs that render the plants as biomonitors (an organism used to determine the quality of the surrounding environment) of their environment using real-time nondestructive Green Fluorescent Protein imagery and traditional postflight analyses	Advanced Biological Research Facility (ABRS)/ Express Rack (ER)	Robert Ferl, Ph.D., University of Florida, Gainesville, FL	ISS	Destiny
	Uragan	RSA	Geophysical	Experimental verification of the ground and space-based system for predicting natural and man-made disasters, mitigating the damage caused, and facilitating recovery				
Spin	Validation of Centrifugation as a Countermeasure for Otolith Deconditioning During Spaceflight	ESA	Human Research and Countermeasures Development	The Validation of Centrifugation as a Countermeasure for Otolith Deconditioning During Spaceflight (Spin) experiment will investigate the effect of microgravity on otolith-ocular reflexes and autonomic function to correlate the otolith-ocular reflex on orthostatic tolerance. It will also study the effect of microgravity on subjective perception of verticality	No Facility	Floris Wuyts, Ph.D. University of Antwerp, Antwerp, Belgium	Pre/ Postflight	Ground

International Space Station Experiments – Expedition 21 and 22 (continued)

Acronym	Title	Agency	Category	Summary	Facility	Principal Investigator	ISS/ Sortie	Ops Location
Integrated Immune	Validation of Procedures for Monitoring Crew Member Immune Function	NASA	Human Research and Countermeasures Development	Validation of Procedures for Monitoring Crew Member Immune Function (Integrated Immune) will assess the clinical risks resulting from the adverse effects of space flight on the human immune system and will validate a flight-compatible immune monitoring strategy. Researchers will collect and analyze blood, urine and saliva samples from crewmembers before, during and after space flight to monitor changes in the immune system. Changes in the immune system will be monitored by collecting and analyzing blood and saliva samples from crewmembers during flight and blood, urine, and saliva samples before and after space flight	Human Research Facility-1 (HRF-1)	Clarence Sams, Ph.D., Johnson Space Center, Houston, TX	ISS	Columbus
Integrated Immune-SDBI	Validation of Procedures for Monitoring Crew Member Immune Function - Short Duration Biological Investigation	NASA	Human Research and Countermeasures Development	Validation of Procedures for Monitoring Crew Member Immune Function - Short Duration Biological Investigation (Integrated Immune-SDBI) will assess the clinical risks resulting from the adverse effects of space flight on the human immune system and will validate a flight-compatible immune monitoring strategy. Immune system changes will be monitored by collecting and analyzing blood, urine and saliva samples from crewmembers before, during and after space flight	Unknown	Clarence Sams, Ph.D., Johnson Space Center, Houston, TX	Sortie	Shuttle
	Vektor-T	RSA	Technical Studies	Study of a high-precision system for ISS motion prediction				
	Veterok	RSA	Technical Studies	Otrabotka new technology to optimization of the gas ambience in inhabited compartment ISS RS				

International Space Station Experiments – Expedition 21 and 22 (continued)

Acronym	Title	Agency	Category	Summary	Facility	Principal Investigator	ISS/ Sortie	Ops Location
	Vsplesk (Burst)	RSA	Geophysical	Seismic effects monitoring. Researching high-energy particles streams in near-Earth space environment				
	Vzaimodeistvie (Interaction)	RSA	Biomedical	Monitoring of the group crew activities under space flight conditions				
Yeast-B	Yeast In No Gravity: The Influence of Microgravity on Cellular Adhesion, Biofilm Formation and Invasive Growth in the Model Eukaryote *Saccharomyces cerevisiae* - B	ESA	Biological Sciences in Microgravity	Yeast In No Gravity: The Influence of Microgravity on Cellular Adhesion, Biofilm Formation and Invasive Growth in the Model Eukaryote *Saccharomyces cerevisiae* - B (Yeast-B) examines the affect of microgravity on specific proteins of yeast cells (*Saccharomyces cerevisiae*). This two part investigation uses two different types of cultures, liquid and solid. The objective of this investigation is to provide scientists with data on the impact of microgravity on organized cell structures	BioLab	Ronnie Willaert, Ph.D., Vrije Universiteit Brussel, Brussels, Belgium	ISS	Columbus
	Zhenshen'-2 (Ginseng-2)	RSA	Biotechnology	Study of the possibility to increase the ginseng biological activity				
Cambium		CSA	Biological Sciences in Microgravity	The Cambium investigation is one in a pair of investigations which utilizes the Advanced Biological Research System (ABRS). Cambium seeks definitive evidence that gravity has a direct effect on cambial cells (cells located under the inner bark where secondary growth occurs) in willow, *Salix babylonica*	Advanced Biological Research Facility (ABRS)/ Express Rack (ER)	Rodney Savidge, Ph.D., Professor of Tree Physiology and Biochemistry, Faculty of Forestry and Environmental Management, University of New Brunswick, Fredericton, NB, Canada	ISS	Destiny

International Space Station Experiments – Expedition 21 and 22 (continued)

Acronym	Title	Agency	Category	Summary	Facility	Principal Investigator	ISS/ Sortie	Ops Location
FOAM-Stability		ESA	Observing the Earth and Educational Activities	Foam-Stability examines the characteristics and stability of foam under microgravity conditions	No Facility	Dominique Langevin, Ph.D. Laboratoire de Physique des Solides, Université Paris Sud, Orsay France	ISS	Columbus
		RSA	Complex Analysis Effectiveness Estimation	Experimental researching of ISS RS resources estimating for ecological investigation of areas				
		RSA	Complex Analysis Effectiveness Estimation	Study of plasma environment on ISS external surface by optical radiation characteristics				
		RSA	Complex Analysis Effectiveness Estimation	Study of microdestruction processes in the ISS habitation modules under the long-term manned flight conditions				
		RSA	Complex Analysis Effectiveness Estimation	Study of the plasma-dust crystals and fluids under microgravity				
		RSA	Complex Analysis Effectiveness Estimation	Study of reflection characteristics of spacecraft plasma environment with onboard engines activated				
		RSA	Study of cosmic rays	Study of fast and thermal neutrons fluxes				
		RSA	Space education	Scientific-educational demonstration of physical laws and phenomena in microgravity conditions: - operation of basic physical motion laws in weightlessness including the effect of reactive and gyroscopic forces on a solid body of revolution; - diffusion processes and the effect of the liquid surface tension, gas bubbles aggregation during the phase separation of gas-liquid fine-disperser medium				

International Space Station Experiments – Expedition 21 and 22 (concluded)

Acronym	Title	Agency	Category	Summary	Facility	Principal Investigator	ISS/ Sortie	Ops Location
		RSA	Space education	Spacecraft and up-to-date technologies for personal communications				
		RSA	Commercial	Exposure of material samples in open space conditions to study the effect of ultraviolet radiation on them				

Digital NASA Television

NASA Television can be seen in the continental United States on AMC-6, at 72 degrees west longitude, Transponder 17C, 4040 MHz, vertical polarization, FEC 3/4, Data Rate 36.860 MHz, Symbol 26.665 Ms, Transmission DVB. If you live in Alaska or Hawaii, NASA TV can now be seen on AMC-7, at 137 degrees west longitude, Transponder 18C, at 4060 MHz, vertical polarization, FEC 3/4, Data Rate 36.860 MHz, Symbol 26.665 Ms, Transmission DVB.

Digital NASA TV system provides higher quality images and better use of satellite bandwidth, meaning multiple channels from multiple NASA program sources at the same time.

Digital NASA TV has four digital channels:

1. NASA Public Service ("Free to Air"), featuring documentaries, archival programming, and coverage of NASA missions and events.
2. NASA Education Services ("Free to Air/Addressable"), dedicated to providing educational programming to schools, educational institutions and museums.
3. NASA Media Services ("Addressable"), for broadcast news organizations.
4. NASA Mission Operations (Internal Only).

Note: Digital NASA TV channels may not always have programming on every channel simultaneously.

Internet Information

Information is available through several sources on the Internet. The primary source for mission information is the NASA Human Space Flight Web, part of the World Wide Web. This site contains information on the crew and its mission and will be updated regularly with status reports, photos and video clips throughout the flight. The NASA Shuttle Web's address is:

http://spaceflight.nasa.gov

General information on NASA and its programs is available through the NASA Home Page and the NASA Public Affairs Home Page:

http://www.nasa.gov

or

http://www.nasa.gov/newsinfo/index.html

This page intentionally blank

Expedition 21/22 Public Affairs Officers (PAO) Contacts

Michael Braukus NASA Headquarters Washington, D.C. michael.j.braukus@nasa.gov	International Partners	202-358-1979
Katherine Trinidad NASA Headquarters Washington, D.C. katherine.trinidad@nasa.gov	Shuttle, Space Station Policy	202-358-1100
John Yembrick NASA Headquarters Washington, D.C. john.yembrick-1@nasa.gov	Shuttle, Space Station Policy	202-358-1100
Michael Curie NASA Headquarters Washington, D.C. michael.curie@nasa.gov	Shuttle, Space Station Policy	202-358-1100
Grey Hautaluoma NASA Headquarters Washington, D.C. grey.hautaluoma-1@nasa.gov	Research in Space	202-358-0668
Ashley Edwards NASA Headquarters Washington, D.C. ashley.edwards-1@nasa.gov	Research in Space	202-358-1756
James Hartsfield NASA Johnson Space Center Houston james.a.hartsfield@nasa.gov	Astronauts/Mission Operations	281-483-5111
Rob Navias NASA Johnson Space Center Houston rob.navias-1@nasa.gov	Mission Operations	281-483-5111
Josh Byerly NASA Johnson Space Center Houston josh.byerly@nasa.gov	Mission Operations	281-483-5111

Kelly Humphries NASA Johnson Space Center Houston kelly.o.humphries@nasa.gov	International Space Station and Mission Operations Directorate	281-483-5111
Nicole Cloutier-Lemasters NASA Johnson Space Center Houston nicole.cloutier-1@nasa.gov	Astronauts	281-483-5111
Steve Roy NASA Marshall Space Flight Center Huntsville, Ala. steven.e.roy@nasa.gov	Science Operations	256-544-0034
Ed Memi The Boeing Company Houston edmund.g.memi@boeing.com	International Space Station	281-226-4029
Adam K. Morgan The Boeing Company Houston adam.k.morgan@boeing.com	International Space Station	281-226-4030

Japan Aerospace Exploration Agency (JAXA)

JAXA Public Affairs Office
Tokyo, Japan
011-81-50-3362-4374, 011-81-3-6266-6400
proffice@jaxa.jp

Naoko Matsuo
JAXA Public Affairs Representative
Houston
281-792-7468
matsuo.naoko@jaxa.jp

Canadian Space Agency (CSA)

Media Relations Office
Canadian Space Agency
450-926-4370

European Space Agency (ESA)

Clare Mattok
Communication Manager
European Space Agency (ESA)
Paris, France
011-33-1-5369-7412
clare.mattok@esa.int

This page intentionally blank