STS-128 / 17A

FD 08 Execute Package

MSG	Page(s)	Title
056A	1 - 11	FD08 Flight Plan Revision
057	12 - 13	FD08 Mission Summary
058	14 - 16	FD08 Transfer Message
059	17	FD08 Crew Choice Downlink
061	18	FD08 EVA Deltas
062	19 - 23	EVA 3 Summary Timeline and Tool Config
063	24 - 40	EVA 3 Detail Timeline
060A	-	FD08 PAO Event Summary Message: Joint Crew News Conference

Approved by FAO:
Gail Hansen

Last Updated: Sep 4 2009 2:23 PM GMT
JEDI *(**J**oint **E**xecute package **D**evelopment and **I**ntegration), v3.0*

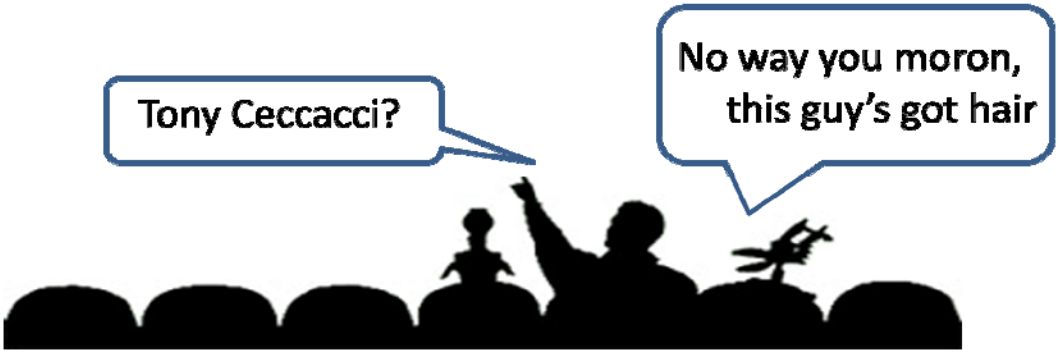

THIS PAGE INTENTIONALLY BLANK

MSG INDEX

MSG NO.	TITLE
056	FD08 Flight Plan Revision
057	FD08 Mission Summary
058	FD08 Transfer Message
059	FD08 Crew Choice Downlink
060	FD08 PAO Event Summary Message: Joint News Conference
061	FD08 EVA Deltas Message
062	EVA 3 Summary Timeline and Tool Config
063	EVA 3 Detail Timeline

1. **Outlook** - The Outlook files are becoming large. Please delete your Sent Mail or move it into your Personal Folders.

2. **WHC Usage** - Total waste quantity on the Shuttle is back on the predicted line after your adjustment yesterday. However, MCC has seen numerous timing issues on the WHC and would like to remind you about time constraints on WHC usage. These can be found on 2.301 WHC Cue Card under the block "WHC Time Constraints".

   - Recommend 6 min interval between use.
   - Three uses in a row (6-min interval) requires a 30-min cool down.
   - Maximum continuous use is 30-min followed by a 20-min cool down.

   3 crew equivalent should be using the WCS, so if higher WCS usage is required in the morning, reduce usage accordingly for the rest of the day.

3. Replace pages 3-80 through 3-87.

09/04/09 08:44:56 **REPLANNED**

GMT 09/04/09 (247) 16 17 18 19 20 21 22 23 09/05 01 02 03 04

MET Day 006 12 13 14 15 16 17 18 19 20 21 22 23 007/00

FD08

STS 128

CDR STURCKOW	LOG	POST SLEEP				XFER	UPDAT	OFF DUTY				EXERCISE	MEAL	CREW PHOTO	N2*	CREW CONF	IMU	MPLM XFER					N2*	♣
PLT FORD	POST SLEEP			PWR FILL #2	WCS#	ILOFF	OFF DUTY	EXERCISE		OFF DUTY			MEAL	CREW PHOTO		CREW CONF	CWC-I	FILL #12	PWR FILL #3	CWC-I	XFER	PWR XFER	MPLM XFER	⊕
MS1 FORRESTER	LOG	POST SLEEP			GLACR#	MCU*	BSA-T	INSTL*	OFF DUTY		EXERCISE	OFF DUTY		MEAL	CREW PHOTO		CREW CONF	MPLM XFER		EVA TOOL CONFIG			MPLM XFER	♦
MS2 HERNANDEZ	SLVA	LOG	POST SLEEP					OFF DUTY			PFC OCA	OFF DUTY	EXERCISE	OFF DUTY	MEAL	CREW PHOTO		CREW CONF	MPLM XFER					®
MS3 OLIVAS	ASPRN	POST SLEEP						OFF DUTY				EXERCISE	OFF DUTY		MEAL	CREW PHOTO		CREW CONF	EVA TOOL CONFIG				E_LK PREP	♥
MS4 FUGLESANG	ASPRN	POST SLEEP						OFF DUTY				EXERCISE	OFF DUTY		MEAL	CREW PHOTO		CREW CONF	EVA TOOL CONFIG				E_LK PREP	Δ

DAY/NIGHT

ORBIT 104 105 106 107 108 109 110 111

TDRS W E Z

ISS TDRS AVAIL

ORB ATT BIAS -XLV -ZVV

NOTES

#COMPACT
#STATUS CHECK
*FILTER CK
*METOX/LiOH/BATT

*RPRS INIT

*RPRS TERM

♣EVA PROC
⊕EVA PROC
♦EVA PROC
®EVA PROC
ΔEVA PROC

09/04/09 08:44:56 **REPLANNED**

GMT 09/05/09 (248) 04 05 06 07 08 09 10 11 12 13 14 15 16

MET Day 007 007/00 01 02 03 04 05 06 07 08 09 10 11 12

STS 128

FD08

CDR STURCKOW	EVA PROC RVW	XFER	TAGUP	PRE SLEEP	XFER BRIEF	PS	PMC A/G	PRE SLEEP	**ISS EXTERNAL SURVEY**					
PLT FORD	EVA PROC RVW	ILON	POD*	PRE SLEEP					SLEEP					
MS1 FORRESTER	EVA PROC RVW	GLACR#	PRE SLEEP						SLEEP					
MS2 HERNANDEZ	EVA PROC RVW	PRE SLEEP			MASK PRE BREATHE	PRE SLEEP			SLEEP					
MS3 OLIVAS	EVA PROC RVW	PRE SLEEP			MASK PREBREATHE	PRE SLEEP			SLEEP					
MS4 FUGLESANG	EVA PROC RVW	PRE SLEEP			MASK PREBREATHE	PRE SLEEP			SLEEP					

10.2 DPRS — **ISS A/L Campout at 10.2 psi**

DAY/NIGHT

ORBIT: 112 113 114 115 116 117 118 119

TDRS W E Z

ISS TDRS AVAIL

ORB ATT: BIAS -XLV -ZVV

NOTES

*A POD HTR RECONFIG
#STATUS CHECK

3

STS-128/17A FD08

GMT Date 09/04 (247) | W T D R S E Z | D O / R N B | MET Day 006 | A T T

CDR STURCKOW

12:00 — SLEEP LOGBOOK (ORB OPS, SDBI)
POST-SLEEP ACTIVITY (ORB OPS, CREW SYS)

√HUM SEP FOR H2O ACCUMULATION

13:00 — BIAS-XLV-ZVV

14:00 — DAILY TRANSFER LIST UPDATE
Ref. Transfer List & MSG 058

15:00 — OFF DUTY

16:00

PLT FORD

POST-SLEEP ACTIVITY (ORB OPS, CREW SYS)

PWR FILL (ORB OPS, ECLS) Init Fill #2
Fill dur ~26 min
Ref. MSG 025

WCS COMPACTOR OPS (DUAL-VANE) (ORB OPS, CUE CARD)

TV (ILLUMINATOR OPS)(PHOTO/TV, CC)
ILLUMINATORS OFF - ALL

OFF DUTY

EXERCISE

MS1 FORRESTER

SLEEP LOGBOOK (ORB OPS, SDBI)
POST-SLEEP ACTIVITY (ORB OPS, CREW SYS)

[A] Ref. STS-128 Consumables Tracking (Cue Card)
Ref. STS-128 Battery Recharge Plan (Cue Card)

GLACIER STATUS CHECK (ASSY OPS, P/L)
L17 Check MCIU filter screen
EVA SYSTEMS: 1.605 BSA BATTERY RECHARGE
TERMINATE, Skip step 15 [A]

EVA SYS: 1.515 EMU METOX/LIOH/BATT RPLCMNT
Ref. STS-128 Consumables Tracking CC(EVA)
Install both EMU &REBA batteries.
Ref. 1.307 REBA INSTALLATION/REMOVAL

OFF DUTY

NOTES

FD08 EZ ACTIVITIES:
√OCAC FILTER
√MDDK DUCT SCREEN
TEPC (STATUS CHECK) (ORB OPS, CREW SYS)
HARD REBOOT ALL PGSCs EXCEPT: STS-1(OCA ROUTER), STS-6(WLES) & STS-5(RPOP2)

STS-128/17A FD08

GMT Date 09/04 (247)	W	T D R S E	Z	D/N	O R B	MET Day 006	ATT	MS2 HERNANDEZ	MS3 OLIVAS	MS4 FUGLESANG	NOTES
16:00						12:00	BIAS-XLV-ZVV	LIQUID SLVA SAMPLE (ORB OPS, SDBI) SLEEP LOGBOOK (ORB OPS, SDBI) POST-SLEEP ACTIVITY (ORB OPS, CREW SYS)	EVA CREW: TAKE 1 ASPIRIN (325mg) POST-SLEEP ACTIVITY (ORB OPS, CREW SYS)	EVA CREW: TAKE 1 ASPIRIN (325mg) POST-SLEEP ACTIVITY (ORB OPS, CREW SYS)	
17:00					104	13:00					
18:00					105	14:00					
19:00					106	15:00		OFF DUTY	OFF DUTY	OFF DUTY	
20:00						16:00					

STS-128/17A FD08

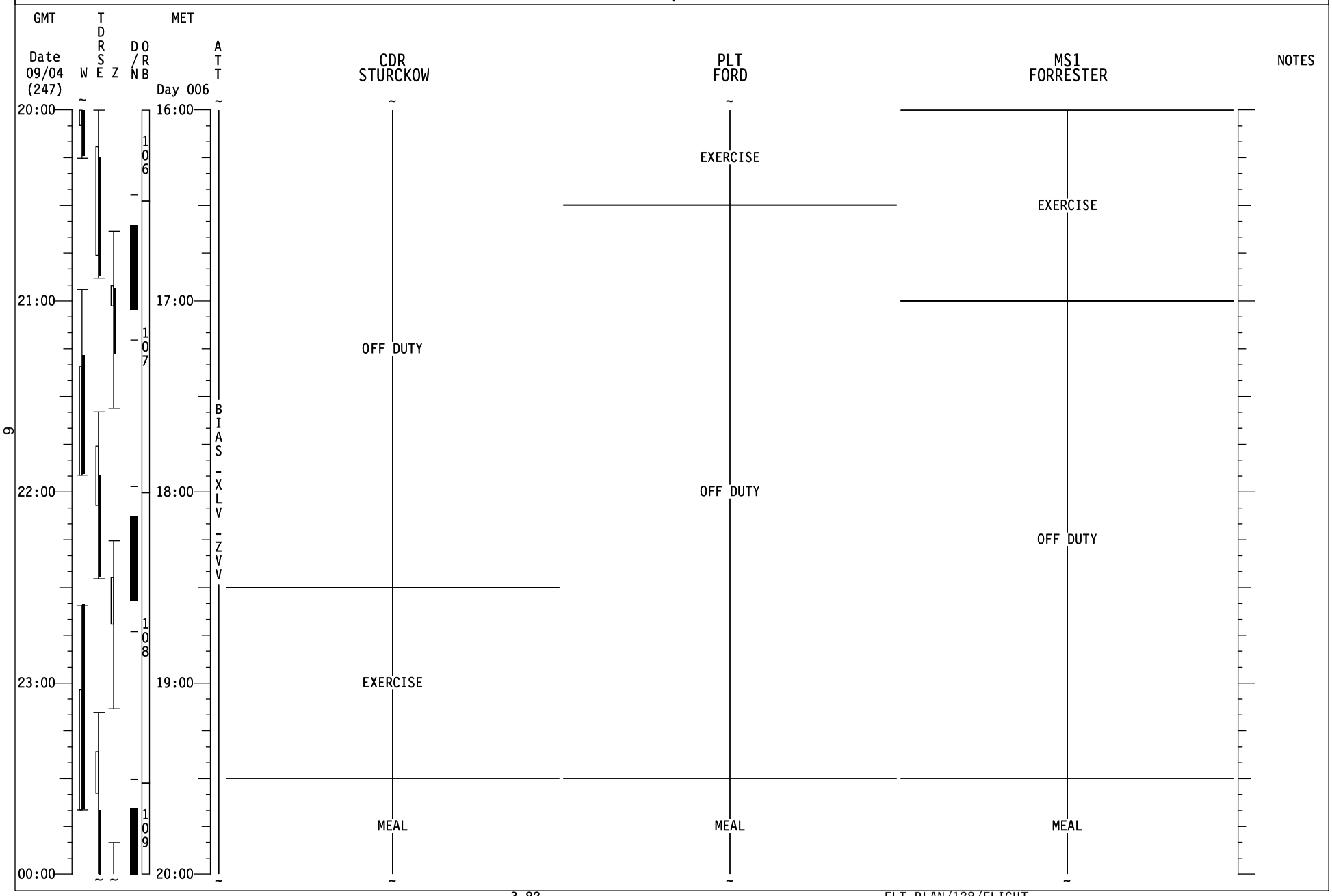

STS-128/17A FD08

GMT Date 09/04 (247) | W | T D R S E | Z | D/N | O R B | MET Day 006 | A T T | MS2 HERNANDEZ | MS3 OLIVAS | MS4 FUGLESANG | NOTES

20:00 — 21:00 — 22:00 — 23:00 — 00:00

16:00 — 17:00 — 18:00 — 19:00 — 20:00

ORB: 106, 107, 108, 109

ATT: BIAS-XLV-ZVV

	MS2 HERNANDEZ	MS3 OLIVAS	MS4 FUGLESANG
	OFF DUTY	OFF DUTY	OFF DUTY
	NETMEETING VIDEO CONFERENCING (ORB OPS, OCA) Private Family Conference KU TDRW (17:21-17:54) B	EXERCISE	
	OFF DUTY	B Omit steps 1,2,3 Use A/G2 for audio Inform MCC of which PGSC will be used	EXERCISE
	EXERCISE	OFF DUTY	
	OFF DUTY		OFF DUTY
	MEAL	MEAL	MEAL

7

STS-128/17A FD08

GMT Date 09/05 (248) | W E Z | TDRS | DO/N RB | MET Day 006 | ATT

GMT	MET	CDR STURCKOW	PLT FORD	MS1 FORRESTER	NOTES
00:00	20:00	MEAL C N2 REPRESS USING PAYLOAD N2 VLVS (ORB OPS, ECLS) Perform Steps 1, 3-7 MCC will TMBU S/W limits	MEAL	MEAL	
		CREW PHOTO	CREW PHOTO	CREW PHOTO	
		N2 REPRESS INIT USING PAYLOAD N2 VLVS C			
01:00	21:00	CREW CONFERENCE ISS KU AVAIL (20:57-21:34)	CREW CONFERENCE ISS KU AVAIL (20:57-21:34)	CREW CONFERENCE ISS KU AVAIL (20:57-21:34)	
		IMU STAR OF OPPTY ALIGN (ORB OPS, GNC) TRANSFER OPS Ref. MPLM Resupply and Return Lists	CWC-I FILL (ORB OPS, CWC-I FILL) Fill Init #12 Ref. MSG 025	TRANSFER OPS Ref. MPLM Resupply and Return Lists	
02:00	22:00		PWR FILL (ORB OPS, ECLS) Init Fill #3 Fill dur ~26 min Ref. MSG 025		
			CWC-I TRANSFER Transfer 1 CWC-I to ISS	17A EVA 3 TOOL CONFIG (EVA, TIMELINES) Ref. STS-128 Consumables Tracking (Cue Card) Ref. MSG 061 and 062	
			PWR TRANSFER Transfer 2 PWRs to ISS		
03:00	23:00	D N2 REPRESS USING PAYLOAD N2 VLVS (ORB OPS, ECLS) Perform Steps 8-13 for PCS 1 Config (non-parens steps) O1 O2/N2 FLOW sel - SYS 1 O2 PPO2 - SNSR A MCC will TMBU S/W limits	TRANSFER OPS Ref. MPLM Resupply and Return Lists	TRANSFER OPS Ref. MPLM Resupply and Return Lists	
04:00	00:00	N2 REPRESS TERM USING PAYLOAD N2 VLVS D EVA PROCEDURE REVIEW See pg. 3-86	EVA PROCEDURE REVIEW See pg. 3-86	EVA PROCEDURE REVIEW See pg. 3-86	

DO/N RB: 109, 110, 111

ATT: BIAS-XLV-ZVV

STS-128/17A FD08

GMT Date 09/05 (248) | W | T D R S E | Z | D/N | O R B | MET Day 006 | ATT

MS2 HERNANDEZ	MS3 OLIVAS	MS4 FUGLESANG	NOTES
MEAL	MEAL	MEAL	
CREW PHOTO	CREW PHOTO	CREW PHOTO	
CREW CONFERENCE ISS KU AVAIL (20:57-21:34)	CREW CONFERENCE ISS KU AVAIL (20:57-21:34)	CREW CONFERENCE ISS KU AVAIL (20:57-21:34)	
TRANSFER OPS Ref. MPLM Resupply and Return Lists	17A EVA 3 TOOL CONFIG (EVA, TIMELINES) Ref. STS-128 Consumables Tracking (Cue Card) Ref. MSG 061 and 062	17A EVA 3 TOOL CONFIG (EVA, TIMELINES) Ref. STS-128 Consumables Tracking (Cue Card) Ref. MSG 061 and 062	
	EVA SYSTEMS: 1.305 EQUIPMENT LOCK PREP Steps 1-3 already complete. In Step 14 perform HELMET LIGHT BULB C/O (EVA, EMU MAINT/RECHARGE) using spare bulb from STS Vol H Inboard Bag. Step 27, Use Vacuum Manometer #13.	EVA SYSTEMS: 1.305 EQUIPMENT LOCK PREP Steps 1-3 already complete. In Step 14 perform HELMET LIGHT BULB C/O (EVA, EMU MAINT/RECHARGE) using spare bulb from STS Vol H Inboard Bag. Step 27, Use Vacuum Manometer #13.	
EVA PROCEDURE REVIEW See pg. 3-87	EVA PROCEDURE REVIEW See pg. 3-87	EVA PROCEDURE REVIEW See pg. 3-87	

Time scale: 00:00, 01:00, 02:00, 03:00, 04:00 GMT; 20:00, 21:00, 22:00, 23:00, 00:00 MET

D/N: 109, 110, 111

ATT: BIAS-XLV-ZVV

STS-128/17A FD08

GMT Date 09/05 (248) | W | T D R S E Z | D/N | O R B | MET Day 007 | A T T

CDR STURCKOW

- EVA PROCEDURE REVIEW
  Ref. EVA 3 BRIEFING CARD
  (EVA, TIMELINES)
  Ref. MSG 061 and 063
- TRANSFER TAGUP
  Coordinate with transfer counterparts
- PRE-SLEEP ACTIVITY
  (ORB OPS, CREW SYS)
- Perform Air Quality Report
- TRANSFER BRIEF
  Call down status to MCC
- PRE-SLEEP ACTIVITY
  (ORB OPS, CREW SYS)
- PRIVATE MEDICAL CONFERENCE
  L9 PAYLOAD STATION A/G (two) - OFF
  Perform via A/G2
- PRE-SLEEP ACTIVITY
  (ORB OPS, CREW SYS)

PLT FORD

- EVA PROCEDURE REVIEW
  Ref. EVA 3 BRIEFING CARD
  (EVA, TIMELINES)
  Ref. MSG 061 and 063
- TV (ILLUMINATOR OPS)(PHOTO/TV, CC)
  ILLUMINATORS ON - A,D
- A14 RCS/OMS HTR R POD - B OFF
  - A AUTO
- PRE-SLEEP ACTIVITY
  (ORB OPS, CREW SYS)

MS1 FORRESTER

- EVA PROCEDURE REVIEW
  Ref. EVA 3 BRIEFING CARD
  (EVA, TIMELINES)
  Ref. MSG 061 and 063
- GLACIER STATUS CHECK (ASSY OPS, P/L)
- PRE-SLEEP ACTIVITY
  (ORB OPS, CREW SYS)

NOTES

BIAS-XLV-ZVV

Crew Wake at MET 7/12:00

STS-128/17A FD08

GMT Date 09/05 (248) | W | T D R S E Z | D/N | O R B | MET Day 007 | A T T

MS2 HERNANDEZ | MS3 OLIVAS | MS4 FUGLESANG | NOTES

04:00 / 00:00

EVA PROCEDURE REVIEW
Ref. EVA 3 BRIEFING CARD
(EVA, TIMELINES)
Ref. MSG 061 and 063

112

05:00 / 01:00

PRE-SLEEP ACTIVITY
(ORB OPS, CREW SYS)

BIAS-XLV-ZVV

06:00 / 02:00

113

EVA SYSTEMS: 1.206 10.2 PSIA CAMPOUT
MASK PREBREATHE

07:00 / 03:00

PRE-SLEEP ACTIVITY
(ORB OPS, CREW SYS)

114

Crew Wake at MET 7/12:00

08:00 / 04:00

MSG 057 - FD08 MISSION SUMMARY

Good Morning Discovery!

Congratulations on another highly successful EVA. Including a new first – first EVA crew to diagnose PMA clocking real-time.

Enjoy your well-earned half day off.

YOUR CURRENT ORBIT IS: 194 X 181 NM

NOTAMS: **ONE CHANGE (ADDED NKT)**

EDW -	EDW IN USE. EDT DAY ELS ONLY.
EDW -	LAKEBED RWY 15/33 GREEN - ELS ONLY. RWY 18L - UNUSABLE.
NOR -	LAKEBED RUNWAYS GREEN.
NKT -	AERODROME CLOSED.
FMH -	RWY 32 SEQUENCED FLASHING LIGHTS OTS.
YJT -	TACAN YJT78 OTS.
LAJ -	TACAN LAJ45 OTS.
HAW -	RWY 31 LDA = 9024 FT.
GUA -	RWY 24R END LIGHTS OTS.
IKF -	NOT USABLE. NO AGREEMENT.
BEN -	NOT RECOMMENDED/NOT SUPPORTED.

NEXT 2 PLS OPPORTUNITIES:

EDW22 ORB 111 – 6/23:28 FEW060 FEW100 7 230/11P16
EDW22 ORB 126 – 7/22:17 FEW060 FEW250 7 230/12P18

OMS TANK FAIL CAPABILITY:

L OMS FAILS: NO
R OMS FAILS: NO

LEAKING OMS PRPLT BURN:

L OMS LEAK: ALWAYS BURN RETROGRADE
R OMS LEAK: ALWAYS BURN RETROGRADE

OMS QUANTITIES(%)

L OMS OX = 34.4 R OMS OX = 33.4
FU = 33.9 FU = 33.4

END OF PAGE 1 OF 2, MSG 057

MSG 057 - FD08 MISSION SUMMARY

DELTA V AVAILABLE:

OMS	359 FPS
ARCS (TOTAL ABOVE QTY1)	23 FPS
TOTAL IN THE AFT	382 FPS
ARCS (TOTAL ABOVE QTY2)	56 FPS
FRCS (ABOVE QTY 1)	33 FPS
AFT QTY 1	82 %
AFT QTY 2	44 %

THERE ARE NO FAILURE/IMPACT/WORK AROUNDS FOR TODAY.

END OF PAGE 2 OF 2, MSG 057

Good morning Danny, Christer, CJ & Jose

Today you will continue the challenging task of packing the MPLM for return! You are about 76 percent complete on Middeck, about 61 percent complete on MPLM, and a bit over 61 percent complete overall. Like yesterday you have very few constraints so just start working your way through the books and let us know if you have any questions!

The Transfer List Excel file, FD08_Transfer_List_STS128.xls, locations are:

- Shuttle: **C:\OCA-up\transfer** (KFX machine)
- Station: **K:\OCA-up\transfer**

Transfer Notes

- **Return Sort & Map:** We have uplinked the return sort pages of the transfer list and the Middeck return map for you to use a reference if needed.
- **Missing Return Item:** The Lever Bracket Assembly (MPLM return item 950) was not found yesterday. Below is a photo and drawing of what the item looks like. You do not have to go searching for the item, but if you happen to come across it please stow it in the MPLM for return.

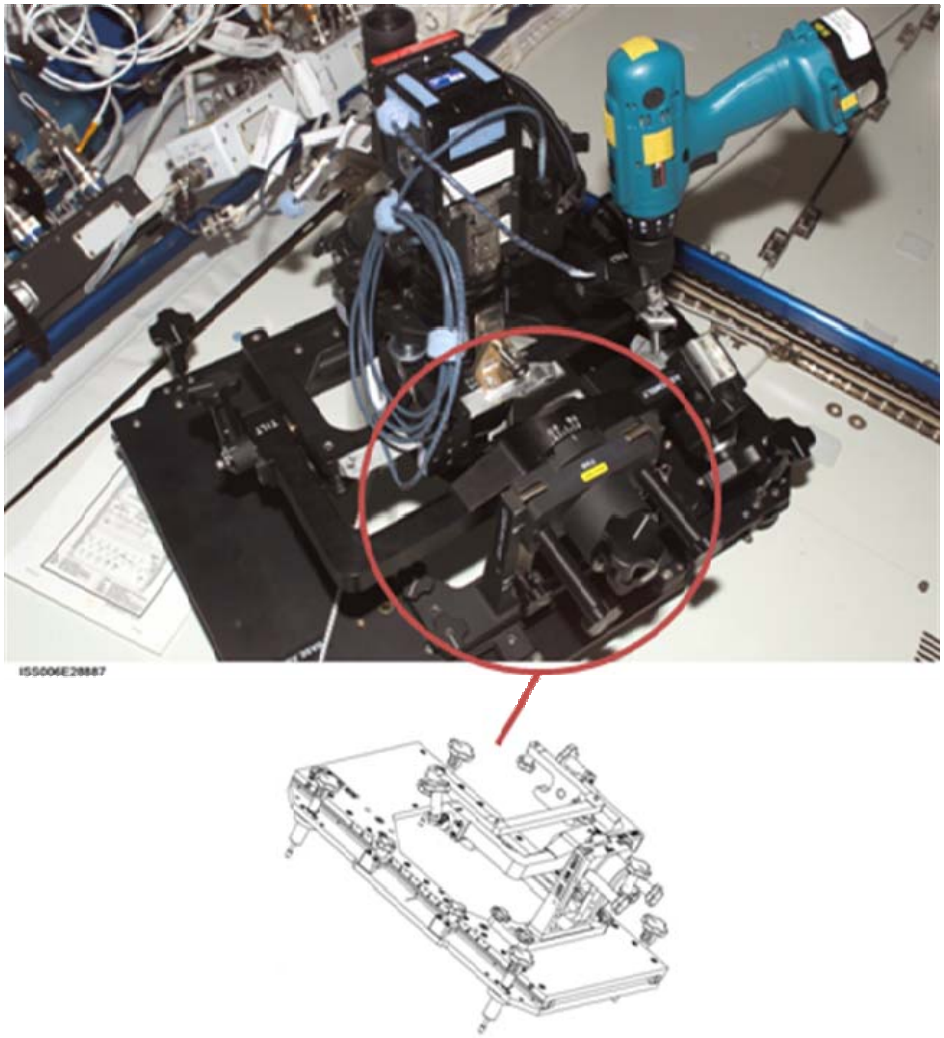

FD08 Choreography

- **Item 117.1:** Transfer S0-TO-NOD3 CABLE BAG CHANNEL 2/3 for EVA 3 TOOL CONFIG activity
- **Item 24:** Return HOCK CTB to MDDK
- **Item 108:** Perform Special Foam Ops
- Transfer remaining unconstrained MPLM resupply items and continue transferring return items
- Stow Pre-pack bags that were temp stowed in Endcone bungee jail for return

Please incorporate uplink pages as follows (we've listed the updates in the order they printed out for you):

In the Middeck Transfer List **LAYOUTS** tab
Add the following page:
MDDK: L-2

In the Middeck Transfer List **RESUPPLY** tab
Replace the following page:
Resupply 4

In the Middeck Transfer List **RETURN** tab
Replace the following page:
Return 5

In the Middeck Transfer List **RETURN SORT** tab
Add the following pages:
Return Sort Rtn Loc 1 thru Rtn Loc 2

In the MPLM Return Transfer List **RETURN** tab
Replace the following page:
Return 19

In the MPLM Return Transfer List **RETURN SORT** tab
Add the following pages:
Return Sort Rtn Loc 3 thru Rtn Loc 10

Changes to the Transfer List are detailed below:

MIDDECK RESUPPLY
Item 24 - new final location

MIDDECK RETURN
Item 903.1 – new item

MPLM RETURN
Item 815 – updated notes

FD09 Choreography

- Transfer return items per crew preference

Have a great day and let us know if you have any questions!

- The STS-128 Transfer Team

MSG 059 - FD08 CREW CHOICE DOWNLINK

Below are your crew choice downlink opportunities based on Ku availability:

TDRS	AOS	LOS	Delta (min)	Notes
Z	7/01:03	7/01:23	20	Analog Only Alpha Stop @ 7/01:16
W	7/01:24	7/01:45	21	
E	7/02:05	7/02:14	9	
Z	7/02:45	7/02:58	13	Analog Only Alpha Stop @ 7/02:49
W	7/03:00	7/03:11	11	
E	7/03:40	7/03:53	13	

END OF PAGE 1 OF 1, MSG 059

Please replace STS-128/17A FS Pgs 7-83 thru 7-98 with message 20-1101 (128-063) EVA 3 Detailed Timeline. Message 20-1100 (128-062) EVA Summary Timeline and Tool Config contains two different summary timelines for EVA 3. The first timeline includes the PMA 3 heater cable connect task, and the second has it deleted. We will be performing an NBL test to verify the PMA3 heater cable routing this morning. If that test is successful we will uplink the PMA3 Heater Cable Connect procedures prior to your procedure review today. If the test is unsuccessful please use the second summary timeline for EVA 3.

<u>Actions for Tool Config:</u>

1. There was some confusion on your calldown during EVA 2 cleanup, can you please confirm that 3 RETs returned inside in the ATA C/L bag?
2. As a reminder, the ATA C/L bag will be re-configured to become the Get-Aheads C/L bag.
3. Retrieve the Medium ORU Bag (p/n SEG 33114494-309, s/n 1004) from A/L1O "Attic."
4. We would like to verify the functionality of stowing/retrieving Torque Multiplier sockets on the tool board. Therefore, perform the following actions:
    a. Stow the 7/16” socket onto the tool board using the torque multiplier tool (nominal method).
    b. Install the 7/16” socket into the torque multiplier from the tool board (nominal method).
    c. Re-stow the 7/16” socket onto the tool board using the torque multiplier tool (nominal method).
    d. Stow the torque multiplier tool on the board.
    e. Stow the whole assembly in CTB 1161, labeled "EVA Misc Tools #2". The CTB is located in A/L1O0_behind closeout.
5. Adjustable equipment tether s/n 1084 that was used under the ATA connector shroud has been cleared for future EVA use. It can be deployed for EVA use onto the tether staging area.

<u>EMU Water Recharge Words</u>:

We suspect a gas bubble was introduced into the water line when the PWR was swapped out. The same issue happened with the IRU during STS-123 and squeezing the PWR moved the gas bubble. Another way to move the gas bubble is to disconnect and reconnect the SCU while configured for EMU water recharge. We’ve scheduled <u>1.506 EMU WATER RECHARGE</u> for the ISS crew this morning, and will be uplinking a modified procedure to include some troubleshooting steps. If the water recharge is unsuccessful we will have Jose and Tim perform a water recharge of the EMUs in the shuttle airlock right after the Crew Conference. We will give you the details for that activity if the task is required.

EVA 3 SUMMARY TIMELINE – PMA3 HEATER CABLE ROUTING

TIME	IV	EV1 (FF)	EV2 (FF)
00:00-00:05		POST DEPRESS (00:05)	POST DEPRESS (00:05)
00:05-00:20		EGRESS (00:15)	EGRESS (00:15)
00:20-00:35		SETUP (00:15)	SETUP (00:15)
00:35-02:05		S3 UPPER OUTBOARD PAS DEPLOY (01:30)	S3 UPPER OUTBOARD PAS DEPLOY (01:30)
02:05-03:05		RGA 2 REMOVE AND REPLACE (01:00)	RGA 2 REMOVE AND REPLACE (01:00)
03:05-03:50		PMA3 HEATER CABLE CONNECT (00:45)	S0 RPCM R&R (00:45)
03:50-05:35		NOD3 AVIONICS CABLE ROUTING (01:45) • CH 2/3 Cable Routing • Connect Ch 2/3 to S0 Panel A145 • CH 1/4 Cable Routing • Connect Ch 1/4 to S0 Panel A145	GPS ANTENNA INSTALLATION (01 :00) NOD3 AVIONICS CABLE ROUTING (00:25) • CH 1/4 Cable Routing NOD1 SLIDEWIRE REMOVAL (00:20)
05:35-05:55		FGB-LAN CABLE REPOSITION W/O MMOD SHIELD (00:20)	GET-AHEADS (00:20)
05:55-06:30		CLEANUP/INGRESS (00:35)	CLEANUP/INGRESS (00:35)
06:30			

EVA 3 SUMMARY TIMELINE – NO PMA3 HEATER CABLE ROUTING

TIME		EV1 (FF)	EV2 (FF)
00:00-00:05		POST DEPRESS (00:05)	POST DEPRESS (00:05)
00:05-00:20		EGRESS (00:15)	EGRESS (00:15)
00:20-00:35		SETUP (00:15)	SETUP (00:15)
00:35-02:05		S3 UPPER OUTBOARD PAS DEPLOY (01:30)	S3 UPPER OUTBOARD PAS DEPLOY (01:30)
02:05-03:05		RGA 2 REMOVE AND REPLACE (01:00)	RGA 2 REMOVE AND REPLACE (01:00)
03:05-04:50		NOD3 AVIONICS CABLE ROUTING (01:45) • CH 2/3 Cable Routing • Connect Ch 2/3 to S0 Panel A145 • CH 1/4 Cable Routing • Connect Ch 1/4 to S0 Panel A145	S0 RPCM R&R (00:45) GPS ANTENNA INSTALLATION (00 :30) NOD3 AVIONICS CABLE ROUTING (00:25) • CH 1/4 Cable Routing
04:50-5:35		FGB-LAN CABLE REPOSITION W/ MMOD SHIELD (00:45)	GPS ANTENNA INSTALLATION (00 :30) NOD1 SLIDEWIRE REMOVAL (00:20)
5:35-5:55		GET-AHEADS (00:20)	GET-AHEADS (00:20)
05:55-06:30		CLEANUP/INGRESS (00:35)	CLEANUP/INGRESS (00:35)
06:30			

EVA 3 TOOL CONFIGURATION

EV1

EMU D-rings
- ❑ Ext on left side
- ❑ Ext on right side
- ❑ Waist Tethers (left Ext to MWS, √locked)
- ❑ Waist Tethers (right Ext to MWS, √locked)
- ❑ 85-ft Safety Tether (left D-ring, √locked)

MWS
- ❑ Small STS Trash Bag
  - ❑ Wire tie (secure trash bag to MWS, tether loop)
- ❑ 1 – Wire tie as tether loop
- ❑ 1 – RET (with PIP pin)
- ❑❑ 2 – RETs
- ❑ 1 – Adj Equipment Tether
- ❑ Swing Arm (right side)
  - ❑ 1 – RET (attach to PGT; block to swingarm)
    - ❑ 1 – PGT s/n 1002 w/6"–Ext–7/16"
- ❑ BRT (left side)
  - ❑ 1 – RET
  - ❑❑❑❑❑❑ 6 – Long wire ties (w/one crimped loop on each)

EMU Gloves
- ❑❑ 2 – Adj Equipment Tethers (on gloves)

EV2

EMU D-rings
- ❑ Ext on left side
- ❑ Ext on right side
- ❑ Waist Tethers (left Ext to MWS, √locked)
- ❑ Waist Tethers (right D-ring to MWS, √locked)
- ❑ 85-ft Safety Tether (right Ext, √locked)
- ❑ 55-ft Safety Tether - spare (right Ext, √locked)

MWS
- ❑ Small Trash Bag
  - ❑ 1 – Adj Equipment Tether
- ❑❑ 2 – Wire ties as tether loops
- ❑ 1 – RET (with PIP pin)
- ❑ 1 – RET
- ❑ 1 – Adj Equipment Tether
- ❑ Swing Arm (right side)
  - ❑ 1 – RET
    - ❑ 1 – PGT s/n 1006 w/2"–Ext–7/16"
  - ❑ 1 – Camera w/bracket
- ❑ BRT (left side)
  - ❑ 1 – RET
  - ❑❑ 2 – Short wire ties
  - ❑ 1 – Long wire tie

EMU Gloves
- ❑❑ 2 – Adj Equipment Tethers (on gloves)

Prior to EVA, perform the following hardware inspections:
1. RET cords for fraying
2. No red line visible, damage, or discoloration on safety and waist tether load alleviation straps
3. Inspect ISS/STS trash bags for deformation/damage
4. Inspect EMU gloves for damage
5. Inspect BRT for loose screws

Use BLUE RETs only

CREWLOCK

- ❑ D-ring extender on A/L D-ring
- ❑ Lg-Sm RET
  - ❑ PMA3 Crewlock Bag
    - ❑ 1 – Wire tie caddy
      - ❑❑❑❑❑❑❑❑❑❑___ – Short wire ties (in caddy)
    - ❑❑❑ 3 – PMA3 HTR Cable Caps (size 15,17,25 integrated together w/long wire tie)
    - ❑ 1 – MMOD Shield Handling Tool
- ❑ Lg-Sm RET
  - ❑ NOD3 Ch 2/3 Avionics Cable Bag
- ❑ Lg-Sm RET
  - ❑ GPS Antenna Med ORU Bag
    - ❑ GPS Antenna #2 (tethered w/integrated lid tether)
    - ❑ GPS Antenna #4 (tethered w/integrated lid tether)
    - ❑ 1 – Adj Fuse Tether (tethered to all 4 caps & bag lid)
  - ❑ 1 – Adj Equipment Tethers (outside of bag, for temp stow)
  - ❑ 1 – RET (outside of bag, for temp stow)
  - ❑ RPCM Crewlock Bag
    - ❑ Spare RPCM s/n C235299 (hook away from RPCM)
    - ❑ 1 – Connector Insulating Sleeve size 33/37
  - ❑ 1 – RET (to bundle CLB to Med ORU bag)
- ❑ Lg-Sm RET
  - ❑ PAS Crewlock Bag
    - ❑ 1 – Hammer
    - ❑ 1 – Detent Release Tool
    - ❑ 1 – RET (to an internal D-ring)
      - ❑ 1 – Detent Release Tool
    - ❑ Integral RET to door handle
    - ❑ Integral RET to door handle
    - ❑ Lg/Sm Adj Equipment Tether (outside of bag)

EVA 3 TOOL CONFIGURATION (Cont)

CREWLOCK (Cont)

- ❑ Lg-Sm RET
  - ❑ Lg ORU Bag
    - ❑ Spare RGA
      - ❑❑ 2 – Connector caps (installed on RGA)
      - ❑ 1 – RET
  - ❑❑ 2 – Adj Equipment Tethers (outside of bag, for temp stow)

- ❑ Adj Fuse Tether
  - ❑ Lg Trash Bag
    - ❑ 1 – RET
  - ❑ 1 – Camera w/bracket

- ❑ Lg-Sm RET
  - ❑ Get-Aheads Crewlock Bag
    - ❑ 2 – Connector Insulating Sleeve size 21/25 (MBS)
    - ❑ 1 – Connector Insulating Sleeve size 15/17 (S0 Bay 03)

Staging Bag

- ❑ Adjustable Fuse Tether #1
  - ❑ Socket Caddy (hook #1)
    - ❑ 6" wobble EXT
    - ❑ RAD
  - ❑ Velcro/Tape Caddy (hook #2)
  - ❑ PGT s/n 1008 (hook #3)
    - ❑ PGT Battery s/n _____
  - ❑ Vice Grips (hook #4)
  - ❑ Ratchet Wrench (hook #5)
  - ❑ *Empty* (hook #6)
  - ❑ *Empty* (hook #7)
- ❑ Adjustable Fuse Tether #2
  - ❑ Spare Torque Wrench w/MLI (hook #1)
  - ❑ Connector Cleaner Tool Kit (hook #2)
  - ❑ Pin Straightener Assy (hook #3)
  - ❑ Probe (hook #4)
  - ❑ Prybar (hook #5)
  - ❑ BRS Pin Tool (hook #6)
  - ❑ Cheater Bar (hook #7)
  - ❑ MMWS Key Strap Assembly (on wire tie to strap)

IV Bag

- ❑ 2 – Towels w/wire ties
- ❑ Contamination Detection Kit w/watch
- ❑ 2 – GP Caddy
  - ❑ 2 – Adj Thermal Mittens
- ❑ 3 – RET (black, must stay in IV bag)
  - ❑ Socket Caddy (hatch cont)
    - ❑ 1/2 socket 8-in ext (hatch)
    - ❑ 7/16 socket 6-in ext (spare)
  - ❑ DCM plug (2) (SAFER hardmount)

EVA 3 CREWLOCK CONFIGURATION MANAGEMENT

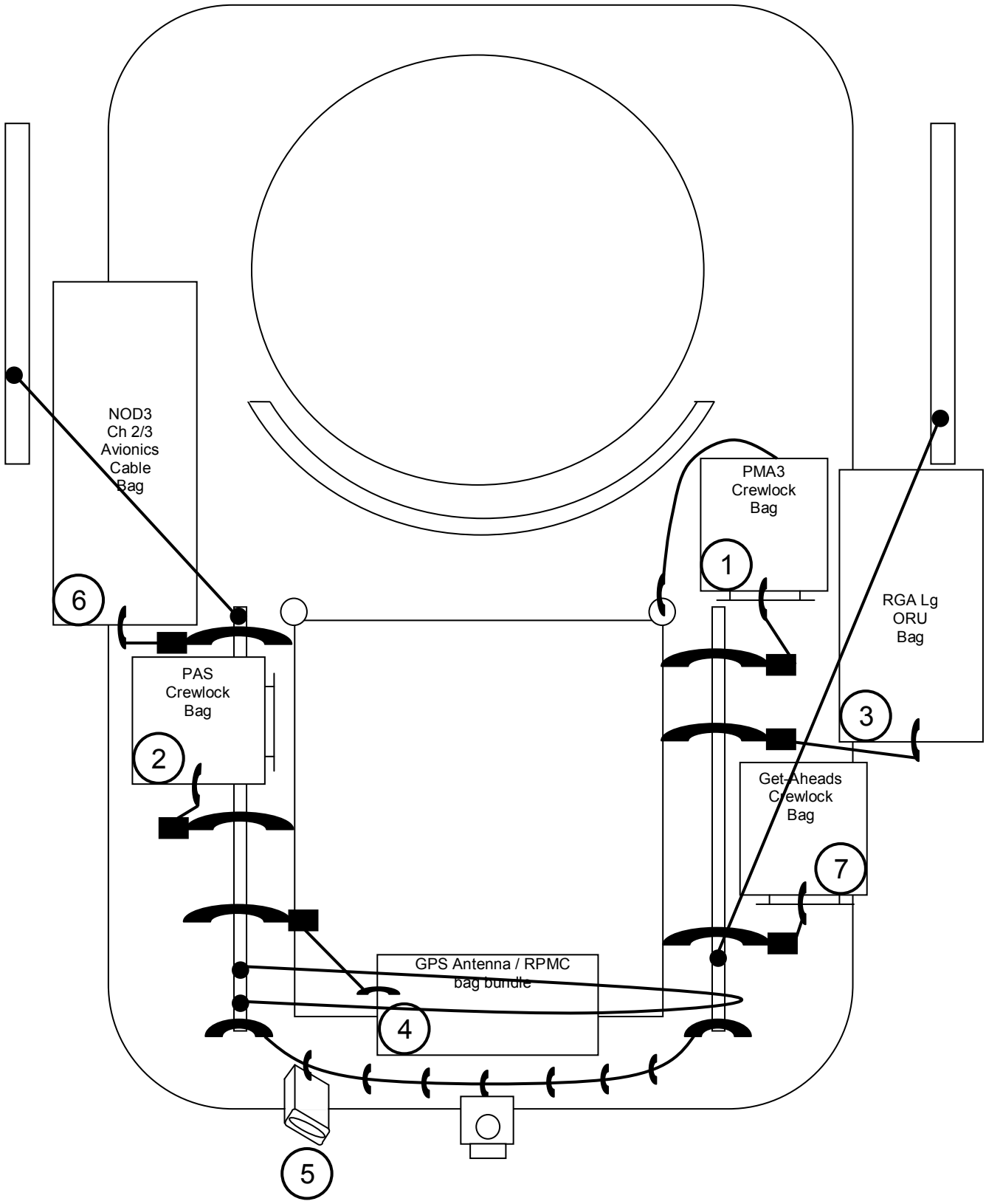

S3 UPPER OUTBOARD PAS DEPLOY (01:30)

IV	EV1 (OI)	EV2 (Fg)
3. IV: Give MCC-H GO to power up IMCA √All tasks inside truss prior to UMA prep complete (including EBCS prep) √Tools cleared from inside truss 4. IV: Obtain GO from MCC-H for RTL Checkout RTL # | 1 | 2 | 3 PIP Pin | | |	UMA PREP 29. Translate under PAS UMA 30. Tether to hitch pin from EVA OVERRIDE anti-rotation cap, remove hitch pin 31. Remove anti-rotation cap and stow in PAS crewlock bag CLEANUP 32. Inspect gloves 33. √SAFER MAN ISOL vlv – OP (dn) and HCM (dn) 34. Perform PAS crewlock bag tool inventory 35. Retrieve PAS crewlock bag; stow on BRT 36. Translate to A/L; EV2 leads	RTL CHECKOUT 23. Translate to each Guide Vane (3) and perform: ❑ Remove launch restraint PIP pin from guide vane; stow in trash bag ❑ On **MCC-H** GO, depress and hold RTL lever for 15 sec, then release ❑ Verify with **MCC-H** good checkout, move to next guide vane CLEANUP 24. Inspect gloves 25. √SAFER MAN ISOL vlv – OP (dn) and HCM (dn) 26. Translate to S3 HR 3008 27. Tether swap to A/L 85-ft safety tether √Both bails closed, sliders locked √Reel unlocked 28. Translate to A/L

RATE GYRO ASSEMBLY (RGA) REMOVE AND REPLACE (01:00)

IV	EV1 (OI)	EV2 (Fg)
	RGA SETUP (00:15) 1. Transfer PAS crewlock bag to EV2 2. Receive Lg ORU bag; stow on BRT 3. Translate to S0 port wedge face via S0 aft route; fairlead as reqd 4. Temp stow spare RGA on S0 Face 3 HAB Cable Tray using integrated lid tethers (2), and to S0 HR 3519 using adj equipment tethers (2) 5. Attach RET to S0 HR 3541 for failed RGA 2 temp stow	RGA SETUP (00:15) 1. Open thermal cover 2. Ingress Crewlock 3. Receive PAS crewlock bag; stow on Lg/Sm RET 4. Transfer Lg ORU bag to EV1; attach Lg/Sm RET to A/L D-ring extender 5. Stow spare 55-ft safety tether in A/L 6. Retrieve GPS Antenna/RPCM bag bundle 7. Egress A/L and close thermal cover 8. Stow RPCM crewlock bag on BRT 9. √SAFER MAN ISOL vlv – OP (dn) and HCM (dn) 10. Set fairlead (P) around Stbd Toolbox WIF (to keep EV1 translation path clear) 11. Translate to S0, Face 1, Bay 00 via CETA spur route 12. Temp stow GPS Antenna/RPCM bag bundle on S0 Face 2 HR3487 or HR3484 (between MBSUs) 13. Inspect gloves
	CAUTION Avoid inadvertent contact with RGA (Z-93 paint)	
	RGA REMOVE AND REPLACE (00:45) 6. Open thermal shroud for RGA 2 (stbd shroud) 7. BRT to S0 HR 3520 for RGA removal operations NOTE If TA clamps must be opened for RGA 2 connector demate, RET to connectors prior to release, to avoid loss inside the truss 8. Demate connectors from RGA 2 as follows: ❑ W4203/P678 from J671 ❑ W4110/P680 from J673 9. Restrain connectors clear of worksite	RGA REMOVE AND REPLACE (00:45) 14. Ingress S0 truss through Face 1 at Bay 02 to access RGA 2 (stbd RGA) inner bolts 15. BRT to S0 HR 3507 for RGA bolt operations NOTE While inside the truss, minimize contact with heat pipes

RATE GYRO ASSEMBLY (RGA) REMOVE AND REPLACE (01:00) (Cont)

IV	EV1 (OI)	EV2 (Fg)
	10. **PGT: B7/CCW2/30.5** (25.5 ft-lb, 30 RPM) 6" -Ext-7/16" 11. Release RGA outer bolts (2), 12-14 turns (bolt pops up when fully released) ❑ Zenith bolt ❑ Nadir bolt 12. Attach long waist tether to S0 HR 3520; release BRT 13. Attach RET from HR 3541 to RGA 2 14. Give EV2 GO to release RGA 2 inner bolts 15. Using RGA baseplate handhold, remove failed RGA and temp stow on S0 HR 3541 16. Retrieve spare RGA from Lg ORU bag; install on guide rails	16. **PGT: B7/CCW2/30.5** (25.5 ft-lb, 30 RPM) 2" -Ext-7/16" 17. On EV1 GO, release RGA 2 inner bolts (2), 12-14 turns (bolt pops up when fully released) ❑ Zenith bolt ❑ Nadir bolt
1. RGA 2 Installation Bolt Data: Bolt / Torque (ft-lb) / Turns Inner Zenith Inner Nadir Outer Zenith Outer Nadir	17. **PGT: A2/CW2/30.5** (3.8 ft-lb, 30 RPM) 6" -Ext-7/16" 18. Give EV2 GO to drive spare RGA 2 inner bolts 19. Drive spare RGA 2 outer bolts (2), 12-14 turns to a hardstop ❑ Zenith bolt ❑ Nadir bolt 20. Release RET from spare RGA 2 21. Remove connector caps (2) from spare RGA 2 and temp stow on MWS	18. **PGT: A2/CW2/30.5** (3.8 ft-lb, 30 RPM) 2" -Ext-7/16" 19. On EV1 GO, drive spare RGA 2 inner bolts (2), 12-14 turns to a hardstop ❑ Zenith bolt ❑ Nadir bolt 20. Release BRT; egress S0 truss through Face 1 21. √SAFER MAN ISOL vlv – OP (dn) and HCM (dn) 22. Inspect gloves

RATE GYRO ASSEMBLY (RGA) REMOVE AND REPLACE (01:00) (Cont)

IV	EV1 (OI)	EV2 (Fg)
2. Notify MCC when connectors mated	22. Mate connectors to spare RGA 2 as follows: ❑ W4203/P678 to J671 ❑ W4110/P680 to J673 23. Close TA clamps as reqd and remove RET 24. ☞ Perform WVS survey 25. Close thermal shroud for RGA 2 26. ☞ Perform WVS survey 27. Retrieve failed RGA and RET from S0 HR 3541 28. Install connector caps on failed RGA 29. Stow failed RGA in Lg ORU bag; stow Lg ORU bag on BRT 30. Inspect gloves 31. Translate to A/L; retrieve fairleads as reqd 32. Open thermal cover 33. Stow Lg ORU bag containing failed RGA in A/L using Lg/Sm RET 34. Egress A/L and close thermal cover 35. √SAFER MAN ISOL vlv – OP (dn) and HCM (dn)	

PMA3 HEATER CABLE CONNECT (00:45)

IV	EV1 (OI)
	PMA3 HEATER CABLE CONNECT (00:45) 1. If performing PMA3 heater cable task, replace this page with uplinked procedures 2. If PMA3 heater cable task deleted, EV1 performs NOD3 Ch 2/3 and 1/4 Avionics Cable Install

S0 RPCM REMOVE AND REPLACE (00:45)

IV	EV2 (Fg)
1. Verify S0 RPCM Inhibits in place √DDCU S01A Converter – Off 2. Give EV2 GO for RPCM removal Equipment hook shown in correct orientation with gate away from RPCM	S0 RPCM R&R (00:30) WARNING Edges of RPCM housing may be sharp, use caution while handling CAUTION Avoid contact with SPDA radiator (face 3) Failure to align and fully seat socket until lock springs have released can result in damage to RPCM Drive Screw Assembly Combined linear and rotational motion on the socket while inserting, can result in damage to RPCM Drive Screw Assembly 1. Translate to GPS Antenna/RPCM bag bundle 2. BRT to S0 HR3484 for RPCM operations 3. Slide stbd SPDA door open partially (avoid hitting detents) 4. Verify failed RPCM S0_1A_D s/n C024088 5. On IV/MCC GO: Tether to failed RPCM using crewlock bag RET (w/hook pointed away from RPCM) 6. **PGT: A6/CCW2/30.5** (8.3 ft-lb, 30 RPM) 2" -Ext-7/16" 7. Release drive screw,~8 turns (push in while turning to release locking tabs) 8. √Status Indicator – UNLOCK 9. Remove failed RPCM, slide off guide rail 10. Inspect guide rail for debris/damage 11. Retrieve spare RPCM; stow failed unit in crewlock bag 12. Verify spare RPCM s/n C235299 13. Inspect spare RPCM connector interface for debris/damage 14. Install spare RPCM on guide rail and slide into soft dock 15. √Status Indicator – not below UNLOCK

S0 RPCM REMOVE AND REPLACE (00:45) (Cont)

IV	EV2 (Fg)
3. Record RPCM Installation Bolt Data: Torque (3.8 ft-lb) | Turns (6.5) [ ] | [ ] 4. Give MCC-H GO for RPCM power up	16. **PGT: A2/CW2/30.5** (3.8 ft-lb, 30 RPM) 2" -Ext-7/16" 17. Engage drive screw, ~6.5 turns to a hardstop (push in while turning to release locking tabs) 18. √Status Indicator – LOCK 19. Perform WVS survey 20. Slide stbd door to closed position 21. √Alignment mark; verify door does not slide freely <u>CONNECTOR INSULATING SLEEVE INSTALL</u> (00:15) 22. Retrieve connector insulating sleeve size 33/37 from RPCM crewlock bag 23. Open S0 Ingress Flap (Bay 00, Face 3) and ingress truss 24. Install connector insulating sleeve on Channel 1/4 CR 8018 Cable connection S0 P333 (W4145) to S0 Ch 1/4 Jumper J333A (W4148) (note that this cable assembly plugs into S0 at Panel A163) 25. Verify all metallic surfaces covered by connector insulating sleeve 26. Perform WVS survey 27. Egress truss and close S0 Ingress Flap 28. Perform WVS survey 29. √SAFER MAN ISOL vlv – OP (dn) and HCM (dn) 30. Translate to GPS Antenna/RPCM bag bundle; perform RPCM crewlock bag tool inventory 31. Retrieve GPS Antenna/RPCM bag bundle from S0 HR; stow on BRT 32. Give GO for RPCM power up 33. Inspect gloves

NOD3 CH 2/3 AND CH 1/4 AVIONICS CABLE INSTALLATION (01:45)

IV	EV1 (OI)	EV2 (Fg)
	NOTE Attach wire ties to handrails in a loose config to allow for cable slack adjustment during cleanup. Remain clear of PMA3 FRGF CH 2/3 AVIONICS CABLE SETUP (00:15) 1. Translate to A/L 2. Stow PMA3 crewlock bag on equipment lock HR using staged Lg/Sm RET and integrated tether 3. Open thermal cover and ingress A/L 4. Retrieve Lg trash bag; stow on swingarm with RET 5. Retrieve NOD3 Ch 2/3 Cable Bag using BRT RET (Lg/Sm RET remains in crewlock) 6. Egress A/L 7. Stow NOD3 Ch 2/3 Cable Bag on BRT 8. Close thermal cover 9. √SAFER MAN ISOL vlv – OP (dn) and HCM (dn) 10. Translate to S0 via the aft route (over the rat's nest); fairlead on S0 HR 3454 (R) to keep safety tether clear of rat's nest 11. Translate to LAB aft endcone HR 0211 (zenith/port region of aft endcone) 12. Stow Ch 2/3 Cable Bag between LAB HR 0211, port stanchion and Port LAB strut, zenith HR, nadir stanchion, using integrated tethers 13. Cinch Ch 2/3 Cable Bag integrated tethers 14. Stow PGT and RET on Ch 2/3 Cable Bag 15. If not already completed, relocate APFR/TS from Z1 WIF 08 to Z1 WIF 10 [3,PP,B,6] 16. Verify Tool Stanchion pitched zenith	GPS ANTENNA INSTALLATION (01:00) 1. Perform GPS Antenna Installation; when EV1 is ready to route the Ch 1/4 avionics cable, break out of GPS Antenna Installation as reqd to assist cable routing

NOD3 CH 2/3 AND CH 1/4 AVIONICS CABLE INSTALLATION (01:45) (Cont)

IV	EV1 (OI)	EV2 (Fg)
1. Verify with MCC that Node 3 Channel 1/4 and 2/3 inhibits are in place (see inhibit pad)	ROUTE FWD END OF CH 2/3 AV CABLE (00:20) 17. Remove Ch 2/3 avionics cable fwd end from NOD3 Ch 2/3 Cable Bag, attach RET as reqd until 2 wire ties installed 18. Unbundle fwd end of avionics cable to second pre-integrated wire tie (L0222) and attach to: ❑ LAB HR 0211 NOTE: This wire tie originally went to LAB HR 0222. Shift this wire tie fwd as reqd to ensure all other pre-integrated wire ties line up with planned HRs 19. Translating fwd, unbundle cable and wire tie to: ❑ S0 Port Strut HR 02 (nadir HR) ❑ S0 Port Strut HR 01 (zenith HR) ❑ S0 HR 3496 ❑ S0 HR 3489 ❑ S0 HR 3485 ❑ S0 HR 3482 CONNECT CH 2/3 AVIONICS CABLE (00:20) 20. On IV/MCC GO: On S0 Panel A145, RET to/integrate long wire tie; remove connector caps (4) from connectors; stow in Lg trash bag (pip-pinned open): ❑ J209 ❑ J188 ❑ J192 ❑ J190 21. On Ch 2/3 avionics cable, remove wire tied connector caps (4) from connectors (RET to any one connector cap); stow in Lg trash bag: ❑ W9026/P209 ❑ W9026/P188 ❑ W9324/P192 ❑ W9026/P190	

NOD3 CH 2/3 AND CH 1/4 AVIONICS CABLE INSTALLATION (01:45) (Cont)

IV	EV1 (OI)	EV2 (Fg)
	22. Mate Ch 2/3 avionics cable connectors to S0 Panel A145 ❑ W9026/P209 to J209 ❑ W9026/P188 to J188 ❑ W9324/P192 to J192 ❑ W9026/P190 to J190 23. Inspect gloves CH 2/3 AVIONICS CABLE CLEANUP (00:15) 24. Bias loose Ch 2/3 avionics cable toward NOD3; secure each wire tie (8) along the cable to applicable handrail: ❑ S0 HR 3462 (wire tie not yet attached) ❑ S0 HR 3482 ❑ S0 HR 3485 ❑ S0 HR 3489 ❑ S0 HR 3496 ❑ S0 Port Strut HR 01 (zenith HR) ❑ S0 Port Strut HR 02 (nadir HR) ❑ LAB HR 0211 25. Coil remaining deployed cable (including "Central" wire tie) and stow in Ch 2/3 Cable Bag using pre-integrated wire ties as reqd 26. ☞ Perform WVS survey of Cable Bag internal config 27. Close Ch 2/3 Cable Bag, ensuring all Velcro flaps (3) properly overlapped 28. Cinch Ch 2/3 Cable Bag integrated adj tethers 29. ☞ Perform WVS survey of Cable Bag external config 30. Retrieve PGT and RET from Ch 2/3 Cable Bag; stow on swingarm 31. Inspect gloves	ROUTE CH 1/4 AVIONICS CABLE (00:20) 1. Translate to Ch 1/4 cable bag stowed on LAB HR 0230 (stbd/nadir side of LAB, below ESP-2) 2. Open Ch 1/4 cable bag, remove fwd end (P208/P181/P183/P185) 3. Attach denoted "Central" wire tie (black sharpie mark on wire tie) to: ❑ LAB HR 0230

NOD3 CH 2/3 AND CH 1/4 AVIONICS CABLE INSTALLATION (01:45) (Cont)

IV	EV1 (OI)	EV2 (Fg)
	ROUTE CH 1/4 AVIONICS CABLE (00:20) 32. Receive fwd end of Ch 1/4 avionics cable from EV2, attach RET as reqd until 2 wire ties installed 33. Translating zenith, unbundle cable and wire tie to: ❑ LAB HR 0229 ❑ S0 Stbd Strut HR 12 (nadir HR) ❑ S0 Stbd Strut HR 11 (zenith HR) 34. Perform reach assessment to ensure Ch 1/4 avionics cable connectors reach S0 Panel A145 35. Bias loose Ch 1/4 avionics cable toward NOD3 to LAB HR 0229; secure each wire tie (3) along the cable to applicable handrail: ❑ S0 Stbd Strut HR 11 (zenith HR) ❑ S0 Stbd Strut HR 12 (nadir HR) ❑ LAB HR 0229 CONNECT CH 1/4 AVIONICS CABLE (00:15) 36. On S0 Panel A145, RET to/integrate long wire tie; remove connector caps (4) from connectors; stow in Lg trash bag: ❑ J185 ❑ J183 ❑ J181 ❑ J208 37. On Ch 1/4 avionics cable, remove wire tied connector caps (4) from connectors (RET to any one connector cap); stow in Lg trash bag: ❑ W9025/P208 ❑ W9025/P181 ❑ W9025/P183 ❑ W9323/P185 38. Close Lg trash bag	4. Route fwd end of cable between ESP-2 and LAB; transfer to EV1 5. Once EV1 has biased loose Ch 1/4 avionics cable beyond LAB HR 0229, secure “Central” wire tie to: ❑ LAB HR 0230 6. Coil any remaining deployed cable and stow in Ch 1/4 Cable Bag using pre-integrated wire ties as reqd 7. Perform WVS survey of Ch 1/4 Cable Bag internal config 8. Close Ch 1/4 Cable Bag, ensuring all Velcro flaps (3) properly overlapped 9. Cinch Ch 1/4 Cable Bag integrated adj tethers 10. Perform WVS survey of Cable Bag external config 11. Inspect gloves 12. If necessary, return to GPS antenna worksite and complete GPS Antenna Installation

NOD3 CH 2/3 AND CH 1/4 AVIONICS CABLE INSTALLATION (01:45) (Cont)

IV	EV1 (OI)	EV2 (Fg)
	39. Mate Ch 1/4 avionics cable connectors to S0 Panel A145 ❑ W9323/P185 to J185 ❑ W9025/P183 to J183 ❑ W9025/P181 to J181 ❑ W9025/P208 to J208	
2. Notify MCC when all Ch 2/3 and Ch 1/4 avionics cable connectors are mated	40. Notify MCC when all Ch 2/3 and Ch 1/4 avionics cable connectors are mated 41. Perform WVS survey	

NOD3 CH 2/3 AND CH 1/4 AVIONICS CABLE INSTALLATION (01:45)

IV (SSRMS)

MCC-H
GPS Antenna 2
1. √RPCM S02B_E RPC 6 – Open, Close Cmd Inh
2. √RPCM S01A_E RPC 5 – Open, Close Cmd Inh
GPS Antenna 4
3. √RPCM S02B_E RPC 8 – Open, Close Cmd Inh
4. √RPCM S01A_E RPC 7 – Open, Close Cmd Inh

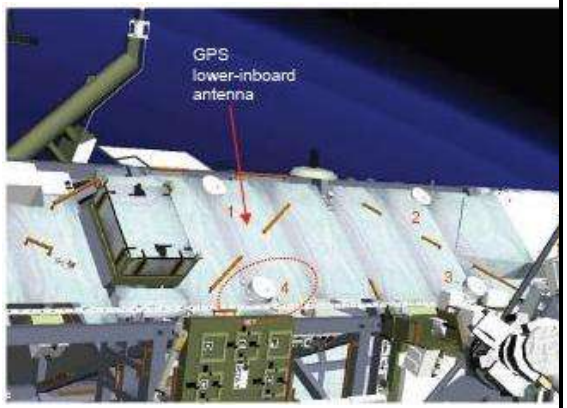

5. Record GPS Ant #4 Installation Bolt Data:

Bolt	Torque	Turns
Zenith/Stbd		
Nadir/Stbd		
Nadir/Port		

6. Record GPS Ant #2 Installation Bolt Data:

Bolt	Torque	Turns
Zenith/Stbd		
Nadir/Stbd		
Nadir/Port		

EV2 (Fg)

CAUTION
Avoid inadvertent contact with GPS Antenna (Z-93 paint)

1. Translate to GPS antenna installation worksite

GPS ANTENNA INSTALLATION (00:30)
2. Temp stow GPS antenna/RPCM bag bundle:
   - ☐ For Antenna #4, use S0 HR 3509
   - ☐ For Antenna #2, use S0 HR 3540

3. BRT for electrical connector and bolt operations:
   - ☐ For Antenna #4, use S0 HR 3508
   - ☐ For Antenna #2, use S0 HR 3537

4. Remove electrical connector covers from electrical connectors:
   - ☐ For Antenna #4, temp stow connector covers in small trash bag
   - ☐ For Antenna #2, temp stow connector covers on MWS

5. Temp stow connectors as required to keep cables from being lost inside the truss
6. Retrieve GPS antenna and report serial number (s/n 1002 – Ant # ____, s/n 1006 – Ant # ____)
7. Install GPS antenna (expect a 4-6 lb soft dock force)

8. **PGT: A7/CW2/30.5**
   (9.2 ft-lb, 30 RPM)
   2" -Ext-7/16"
9. Engage bolts (3) in any order, ~10 turns to a hardstop
10. On IV/MCC-H GO: mate connectors (any order) as follows:

GPS Antenna #4	GPS Antenna #2
☐ W4503/P696 to J1	☐ W4503/P561 to J1
☐ W4502/P697 to J2	☐ W4502/P562 to J2

11. Install MLI shroud using new wire ties as required
12. Perform WVS survey
13. Transfer connector covers (2) from MWS to adj fuse tether in GPS antenna bag
14. When complete with GPS Antenna #2 and #4 installation, perform GPS antenna bag tool inventory
15. Retrieve GPS antenna/RPCM bag bundle from S0 HR; stow on BRT
16. Inspect gloves

NOD-FGB LAN CABLE REPOSITION/NOD1 SLIDEWIRE REMOVAL (00:45)

IV	EV1 (OI)	EV2 (Fg)
	NOD-FGB LAN CABLE REPOSTION (00:45) 1. Procedure can be found in (EVA FS 7-130) 2. If no PMA3 Heater Cable task, perform entire task 3. If PMA3 Heater Cable task is performed, perform NOD-FGB LAN Cable Reposition, Steps 1-7 only (00:20 duration)	NOD1 SLIDEWIRE REMOVAL (00:20) CAUTION Slidewire is damaged and could present a sharp edge. Caution should be taken not to touch nicked areas 1. Translate to A/L 2. Retrieve PMA3 crewlock bag from equipment lock HR (leave Lg/Sm RET on equipment lock HR); stow on BRT 3. Translate to NOD1 slidewire fwd stanchion; attach internal RET from PMA3 crewlock bag to fwd stanchion 4. **PGT: A5/CCW2/30.5** (7.0 ft-lb, 30 RPM) 6" -Ext-7/16" 5. Drive stanchion bolt to release slidewire tension 6. Remove pip pin (lanyarded to fwd stanchion) 7. Depress fwd stanchion plunger and pull stanchion fwd to remove from mount 8. Translate to the aft stanchion, coiling slidewire; restrain in hand or with a tether as reqd 9. Remove pip pin (lanyarded to aft stanchion) 10. Depress aft stanchion plunger and pull stanchion aft to remove from mount 11. Stow slidewire inside PMA3 crewlock bag 12. Perform PMA3 crewlock bag tool inventory and close both lids 13. Inspect gloves 14. Translate to A/L

GET AHEADS (00:20)

IV	EV1 (OI)	EV2 (Fg)
	GET-AHEADS (00:20) 1. Time permitting, perform get-aheads	GET-AHEADS (00:20) 1. Retrieve Lg/Sm RET from equipment lock HR; stow on PMA3 crewlock bag 2. Open thermal cover and ingress A/L 3. Stow PMA3 crewlock bag using Lg/Sm RET 4. Retrieve Get-Aheads crewlock bag using BRT RET 5. Egress A/L 6. Stow Get-Aheads crewlock bag on BRT 7. Close thermal cover 8. √SAFER MAN ISOL vlv – OP (dn) and HCM (dn) 9. Translate to S0, Bay 04, Face 6 to retrieve externally stowed 55-ft safety tethers (2) 10. Retrieve 55-ft safety tether from S0 HR 3539; stow on Get-Aheads crewlock bag exterior 11. Retrieve 55-ft safety tether from S0 HR 3544; stow on Get-Aheads crewlock bag exterior 12. Inspect gloves 13. Time permitting, perform get-aheads

EVA CLEANUP/INGRESS (00:35)

IV	EV1 (Ol)	EV2 (Fg)
	CLEANUP (00:15) 1. Cleanup as required	CLEANUP (00:15) 1. Cleanup as required
	INGRESS (00:20) 2. Tool inventory	INGRESS (00:20) 2. Tool inventory 3. Open thermal cover 4. Stow Get-Aheads crewlock bag in crewlock using Lg/Sm RET
1. Perform WVS PWRDN (PHOTO/TV, WVS CUE CARD)		5. Ingress A/L 6. Attach right waist tether to fwd UIA D-ring √Both bails closed, sliders locked
	3. On EV2 GO, release EV2 A/L 85-ft safety tether anchor hook from external D-ring; transfer to EV2	7. Give EV1 GO to remove EV2 A/L 85-ft safety tether anchor hook
	4. Attach waist tether to A/L internal D-ring √Both bails closed, sliders locked	8. Receive A/L 85-ft safety tether from EV1; stow on MWS
	5. Release EV1 A/L 85-ft safety tether anchor hook from external A/L D-ring; stow on MWS 6. Ingress A/L 7. Close hatch thermal cover; attach Velcro strap	
	8. Connect SCU to DCM; √SCU locked 9. Expect 1-3 min delay for SCU cooling w/TCV 8-Max C 10. WATER – OFF (fwd) expect H2O IS OFF msg	9. Connect SCU to DCM; √SCU locked 10. Expect 1-3 min delay for SCU cooling w/TCV 8-Max C 11. WATER – OFF (fwd) expect H2O IS OFF msg
	CAUTION Do not close hatch until EMU water – OFF for 2 min	
	11. Verify outer hatch clear of hardware 12. EV Hatch – verify handle position per hatch decal; close and lock hatch 13. Go to PRE-REPRESS (DEPRESS/REPRESS Cue Card)	12. Go to PRE-REPRESS (DEPRESS/REPRESS Cue Card)

POST EVA 3 TOOL CONFIG

EV1

EMU D-rings
- ❑ Ext on left side
- ❑ Ext on right side
- ❑ Waist Tethers (left Ext to MWS, √locked)
- ❑ Waist Tethers (right Ext to MWS, √locked)
- ❑ 85-ft Safety Tether (left D-ring, √locked)

MWS
- ❑ Small STS Trash Bag
  - ❑ Wire tie (secure trash bag to MWS, tether loop)
- ❑ 1 – Wire tie as tether loop
- ❑ 1 – RET (with PIP pin)
- ❑❑ 2 – RETs
- ❑ 1 – Adj Equipment Tether
- ❑ Swing Arm (right side)
  - ❑ 1 – RET
    - ❑ 1 – PGT w/6" -Ext-7/16"
  - ❑ 1 – RET
    - ❑ Lg Trash Bag
- ❑ BRT (left side)
  - ❑ 1 – RET
  - ❑❑❑❑❑❑ 6 – Long wire ties

EMU Gloves
- ❑❑ 2 – Adj Equipment Tethers

EV2

EMU D-rings
- ❑ Ext on left side
- ❑ Ext on right side
- ❑ Waist Tethers (left Ext to MWS, √locked)
- ❑ Waist Tethers (right D-ring to MWS, √locked)
- ❑ 85-ft Safety Tether (right Ext, √locked)

MWS
- ❑ Small Trash Bag
  - ❑ 1 – Adj Equipment Tether
    - ❑❑❑ 3 – PAS RTL PIP pins
- ❑❑ 2 – Wire ties as tether loops
- ❑ 1 – RET (with PIP pin)
- ❑ 1 – RET
- ❑ 1 – Adj Equipment Tether
- ❑ Swing Arm (right side)
  - ❑ 1 – RET
  - ❑ 1 – Camera w/bracket
- ❑ BRT (left side)
  - ❑ 1 – RET
  - ❑❑ 2 – Short wire ties
  - ❑ 1 – Long wire tie

EMU Gloves
- ❑ 2 – Adj Equipment Tether

CREWLOCK
- ❑ D-ring extender on A/L D-ring
- ❑ Lg-Sm RET
  - ❑ PMA3 Crewlock Bag
    - ❑ 1 – Wire tie caddy
      - ❑❑❑❑❑❑❑❑❑❑___ – Short wire ties
    - ❑ NOD1 Slidewire
    - ❑ MMOD Shield Handling Tool
- ❑ 1 – Spare 55-ft safety tether

CREWLOCK (cont)
- ❑ Lg-Sm RET
- ❑ Lg-Sm RET
  - ❑ PAS Crewlock Bag
    - ❑ Hammer
    - ❑ Detent Release Tool
    - ❑ 1 – RET
      - ❑ Detent Release Tool
    - ❑ Stow Clevis Bracket
    - ❑ Antirotation cap w/Hitch Pin
    - ❑ Lg/Sm Adj Equipment Tether
- ❑ Lg-Sm RET
  - ❑ Lg ORU Bag
    - ❑ Failed RGA
      - ❑❑ 2 – Connector caps (installed on RGA)
      - ❑ 1 – RET
  - ❑❑ 2 – Adj Equipment Tethers (outside of bag)
- ❑ Adj Fuse Tether
  - ❑ Camera w/bracket
- ❑ Lg-Sm RET
  - ❑ GPS Antenna Med ORU Bag
    - ❑ Adj Fuse Tether
      - ❑❑❑❑ 4 – GPS Antenna Caps
      - ❑❑ 2 – GPS cable caps with wire tie
  - ❑ 1 – Adj Equipment Tether (outside of bag, for temp stow)
  - ❑ 1 – RET (outside of bag, for temp stow)
  - ❑ RPCM Crewlock bag (bundled to Med ORU bag)
    - ❑ 1 – RPCM (failed)
  - ❑ 1 – RET (to bundle CLB to Med ORU bag)
- ❑ Lg-Sm RET
  - ❑ Get-Aheads Crewlock Bag
    - ❑❑ 2 – Connector Insulating Sleeve size 21/25 (MBS)
    - ❑ 1 – Connector Insulating Sleeve size 15/17
  - ❑❑ 2 – 55-ft safety tethers (stowed on outside of bag)