STS-127 / 2JA

FD 13 Execute Package

MSG	Page(s)	Title
116A	1 - 18	FD13 Flight Plan Revision **(pdf)**
117	19 - 20	FD13 Mission Summary **(pdf)**
118	21	MPC Transfer Message **(pdf)**
119	22 - 23	FD13 Transfer Message **(pdf)**
120	24 - 27	EVA5 Tie-Down Plan **(pdf)**
121	28 - 31	PAS Contingency Tie-Down Plan **(pdf)**
122	32	Holter Patient Cable Info **(pdf)**
123B	33 - 36	FD13 Bag Maps **(pdf)**

Approved by FAO: *Tobin Melroy*

Last Updated: Jul 27 2009 7:09AM GMT
JEDI *(**J**oint **E**xecute package **D**evelopment and **I**ntegration), v2.04.0003*

MSG INDEX

MSG NO.	TITLE
116A	FD13 Flight Plan Revision
117	FD13 Mission Summary
118	MPC Transfer Message
119	FD13 Transfer Message (20-0613)
120	EVA5 Tie-Down Plan (20-0614)
121	PAS Contingency Tie-Down Plan (20-0615)
122	Holter Patient Cable Info (20-0617)
123B	FD13 Bag Maps

1. POST SLEEP CRYO CONFIG

   For today's cryo config, O2 tanks 1 and 5 will be active, and H2 tanks 1 and 4 will be active.

   R1 O2,H2 MANF VLV TK1 (two) - OP (tb-OP)

2. JPM WINDOW SHUTTERS

   The JPM Aft window shutter needs to be closed prior to EVA 5 and must remain closed until the end of the event.

3. N2 REPRESS USING PAYLOAD N2 VALVES

   The repress scheduled at 11/14:30 should not be initiated until after the Crewlock has been fully depressurized for EVA 5.

4. TIE DOWN PLAN MESSAGES

   The tie down plans we promised you are located in messages 120 (20-0614) and 121 (20-0615). If you need to print those out, you will need to do so over on the lab printer, because pictures are included.

5. MIDDECK BAG LAYOUTS

Good Morning from the 127 Middeck Stowage Team,

MSG 123 contains the updated 5-MLE bag layouts. The current 5-MLE bag configurations optimize the weight and c.g. of the stacks.

Stowage Configuration Notes:

For the stowage of the Monoblock (#610), please use Transfer items #412-414 (half CTBs) and #418 (CTB) to pad the hardware and fill any voids within Bag F (Ext A/L Floor Bag).

Please wrap the Metox canister in Bag E (MD Ceil Port 2) with one of the foam sheets from that location. Relocate the remaining foam sheets in Bag E to Bag B (MD Floor Port1) as padding for the RFTA (#608).

6. REPLACE PAGES 2-44 THROUGH 2-49 AND 3-138 THROUGH 3-147.

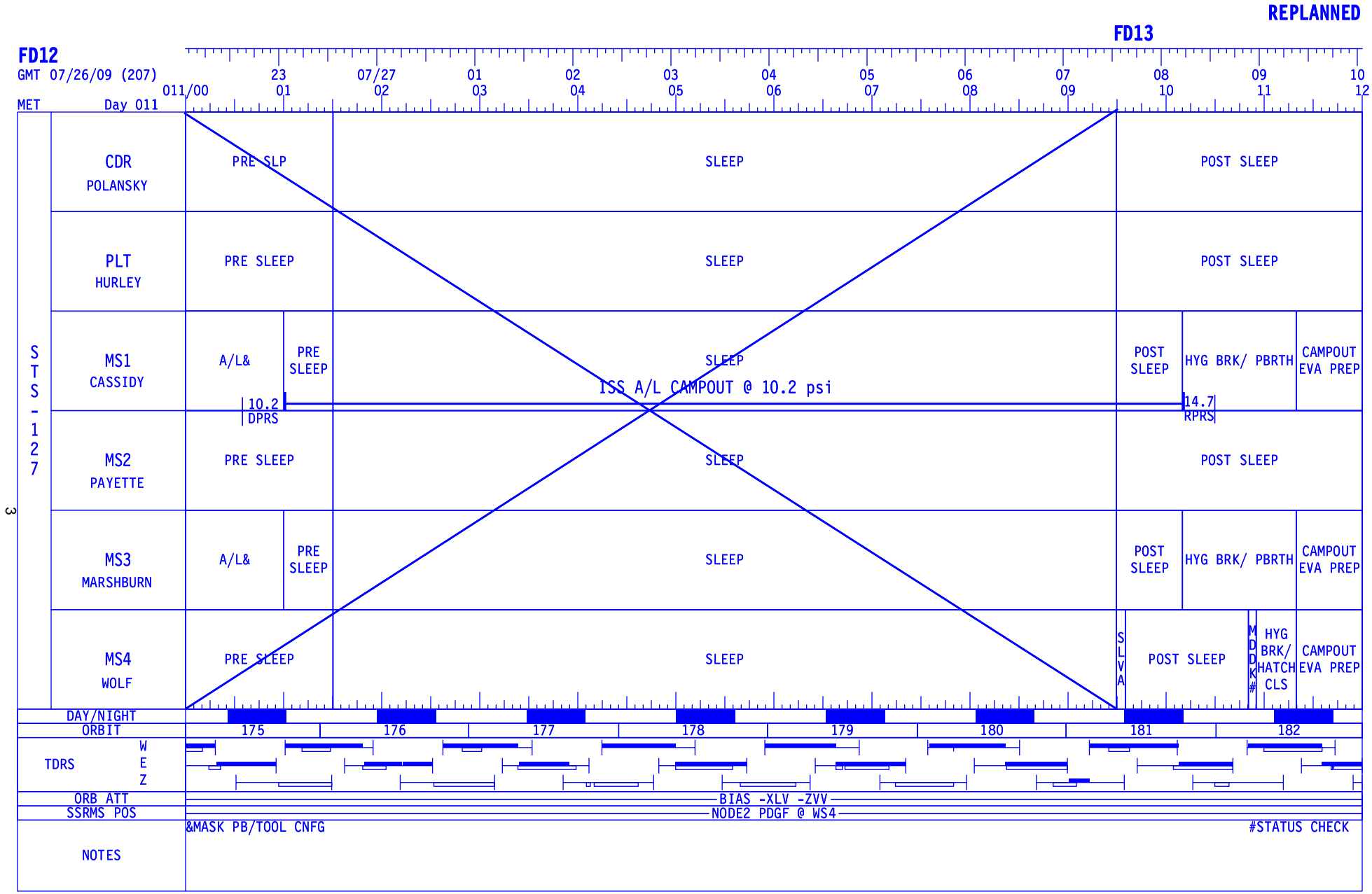
REPLANNED
FD12
FD13
GMT 07/26/09 (207)
MET
Day 011
011/00
23 01
07/27 02
01 03
02 04
03 05
04 06
05 07
06 08
07 09
08 10
09 11
10 12
STS-127
CDR POLANSKY
PRE SLP
SLEEP
POST SLEEP
PLT HURLEY
PRE SLEEP
SLEEP
POST SLEEP
MS1 CASSIDY
A/L&
PRE SLEEP
SLEEP
POST SLEEP
HYG BRK/ PBRTH
CAMPOUT EVA PREP
ISS A/L CAMPOUT @ 10.2 psi
10.2 DPRS
14.7 RPRS
MS2 PAYETTE
PRE SLEEP
SLEEP
POST SLEEP
MS3 MARSHBURN
A/L&
PRE SLEEP
SLEEP
POST SLEEP
HYG BRK/ PBRTH
CAMPOUT EVA PREP
MS4 WOLF
PRE SLEEP
SLEEP
SLVA
POST SLEEP
MDDK#
HYG BRK/ HATCH CLS
CAMPOUT EVA PREP
DAY/NIGHT
ORBIT
175
176
177
178
179
180
181
182
TDRS
W
E
Z
ORB ATT
BIAS -XLV -ZVV
SSRMS POS
NODE2 PDGF @ WS4
NOTES
&MASK PB/TOOL CNFG
#STATUS CHECK

3

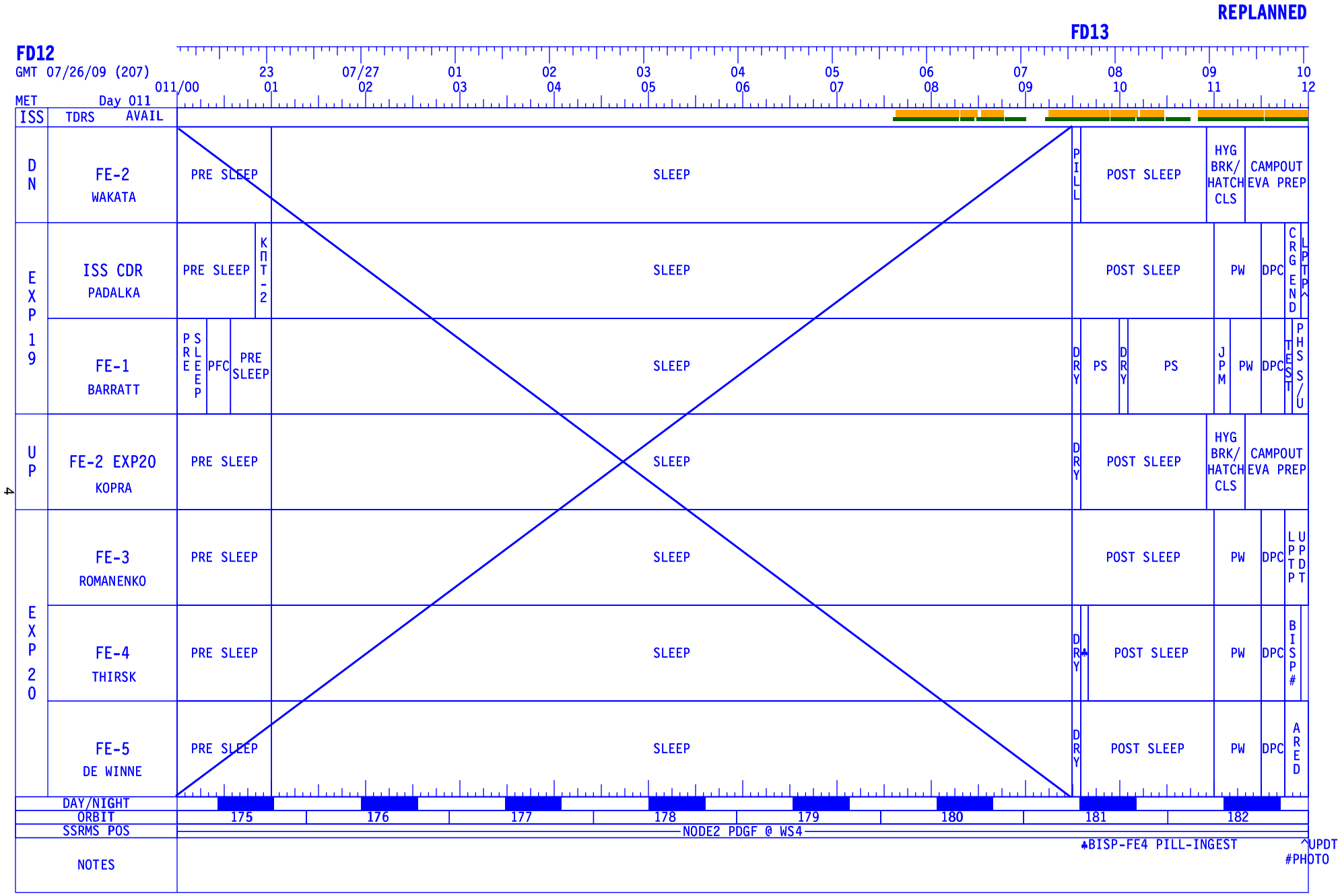
REPLANNED
FD12
FD13
GMT 07/26/09 (207)
MET Day 011
011/00 23 01 07/27 02 01 03 02 04 03 05 04 06 05 07 06 08 07 09 08 10 09 11 10 12
ISS TDRS AVAIL
DN
FE-2 WAKATA
PRE SLEEP
SLEEP
PILL
POST SLEEP
HYG BRK/ HATCH CLS
CAMPOUT EVA PREP
EXP 19
ISS CDR PADALKA
PRE SLEEP
KПT-2
SLEEP
POST SLEEP
PW
DPC
CRG END
LPTP^
FE-1 BARRATT
PRE SLEEP
PFC
PRE SLEEP
SLEEP
DRY
PS
DRY
PS
JPM
PW
DPC
TEST
PHS S/U
UP
FE-2 EXP20 KOPRA
PRE SLEEP
SLEEP
DRY
POST SLEEP
HYG BRK/ HATCH CLS
CAMPOUT EVA PREP
EXP 20
FE-3 ROMANENKO
PRE SLEEP
SLEEP
POST SLEEP
PW
DPC
LPTP
UPDT
FE-4 THIRSK
PRE SLEEP
SLEEP
DRY
♣
POST SLEEP
PW
DPC
BISP#
FE-5 DE WINNE
PRE SLEEP
SLEEP
DRY
POST SLEEP
PW
DPC
ARED
DAY/NIGHT
ORBIT
175 176 177 178 179 180 181 182
SSRMS POS
NODE2 PDGF @ WS4
NOTES
♣BISP-FE4 PILL-INGEST
^UPDT
#PHOTO

4

NO UNISOLATED EXERCISE
[VE INSTALL/PAS DEPLOY]

REPLANNED

FD13
GMT 07/27/09 (208)

MET Day 011

12 13 14 15 16 17 18 19 20 21 22 23 012/00

STS-127

| | | |

NO UNISOLATED EXERCISE
[VE INSTALL/PAS DEPLOY]

REPLANNED

FD13
GMT 07/27/09 (208)
MET Day 011

12 13 14 15 16 17 18 19 20 21 22 23 012/00

ISS TDRS AVAIL

DN	FE-2 WAKATA	CAMPOUT EVA PREP; EMU; PURGE; EMU PREBREATHE; C_LK DPRS; P DPS; PCDF PU DEINST; PCDF XFER; EDR LKR; DCNFG; MIDDAY-MEAL; HANDOVER; EXERCISE TVIS; EXERCISE ARED; P-RPS; RPRS; POST EVA W/H2O; PMC; PRE SLEEP
EXP 19	ISS CDR PADALKA	LPTP^; ПЗЭ-МО-5; VELO; MIDDAY-MEAL; КПТ-2; КПТ-2-FE3-EXE; EXERCISE TVIS; TVIS HYG; PW; DPC; PW; PRE SLEEP
EXP 19	FE-1 BARRATT	EXERCISE TVIS; EXERCISE ARED; LOCD; PHOTO; LCAD S/U; LOCD PREP; SWAB; DRY; DATA; PHS W/O BLD CMO; MIDDAY-MEAL; AED; PHS STOW; SWAB; DATA; SWAB; DRY; DATA; SWAB; GLOVE; DATA; LACTAD; STOW; EVA CAM RCNFG; DPC; PW; PRE SLEEP
UP	FE-2 EXP20 KOPRA	CAMPOUT EVA PREP; EMU; PURGE; EMU PREBREATHE; C_LK DPRS; P DPS; DEGAS; PHS W/O BLD SUBJ; MIDDAY-MEAL; HANDOVER; EXERCISE CEVIS; P-RPS; RPRS; POST EVA W/H2O; PRE SLEEP
EXP 20	FE-3 ROMANENKO	LPTP UPDT; TK COTP MNT; ПЗЭ-МО-5; EXERCISE TVIS; TVIS HYG; MIDDAY-MEAL; СОГС CMS ANLZ; СВО СРВК ВУ MNT; АВК MNT; CO2 RPL; EXERCISE ARED; СОЖ MNT; ИП-1; IMS; PW; DPC; PW; PRE SLEEP
EXP 20	FE-4 THIRSK	COLBERT PREP; EXERCISE CEVIS; EXERCISE ARED; MIDDAY-MEAL; ESA H/W RELOCATE; FIREPORT LABEL; IWIS; TEARDOWN; IWIS; EXDL; PW; DPC; PW; PRE SLEEP
EXP 20	FE-5 DE WINNE	ARED; LPT; NES DATA XFER; INC20-SYS H/W-CONFG; LOCATE; TVIS; LASER; MIDDAY-MEAL; CWCI FILL 1; XFER; CWCI FILL 2; NES; STOW; CSA O2 CAL; EXERCISE CEVIS; PW; DPC; PW; PRE SLEEP

DAY/NIGHT

ORBIT: 183 | 184 | 185 | 186 | 187 | 188 | 189 | 190

SSRMS POS: NODE2 PDGF @ WS4

NOTES: ^UPDT

REPLANNED

FD13 | **FD14**

GMT 07/27/09 (208)

MET Day 012

012/00 23 01 07/28 02 01 03 02 04 03 05 04 06 05 07 06 08 07 09 08 10 09 11 10 12

STS-127

CDR POLANSKY	PRE SLEEP	SLEEP	POST SLEEP	N2*
PLT HURLEY	PRE SLEEP	SLEEP	POST SLEEP	EXER
MS1 CASSIDY	PRE SLEEP	SLEEP	LOGRN ALSOP	POST SLEEP
MS2 PAYETTE	PRE SLEEP	SLEEP	POST SLEEP
MS3 MARSHBURN	PRE SLEEP	SLEEP	LOGRN ALSOP	POST SLEEP	MDK# XFR UPDAT
MS4 WOLF	PRE SLEEP	SLEEP	POST SLEEP

DAY/NIGHT

ORBIT: 191 192 193 194 195 196 197 198

TDRS: W E Z

ORB ATT: BIAS -XLV -ZVV

SSRMS POS: NODE2 PDGF @ WS4

NOTES: *RPRS INIT #STATUS CHECK

REPLANNED

FD13 — **FD14**

GMT 07/27/09 (208)

MET Day 012

012/00 23 01 07/28 02 01 03 02 04 03 05 04 06 05 07 06 08 07 09 08 10 09 11 10 12

| ISS | TDRS AVAIL | | |

REPLANNED

STS-127 FD (13)

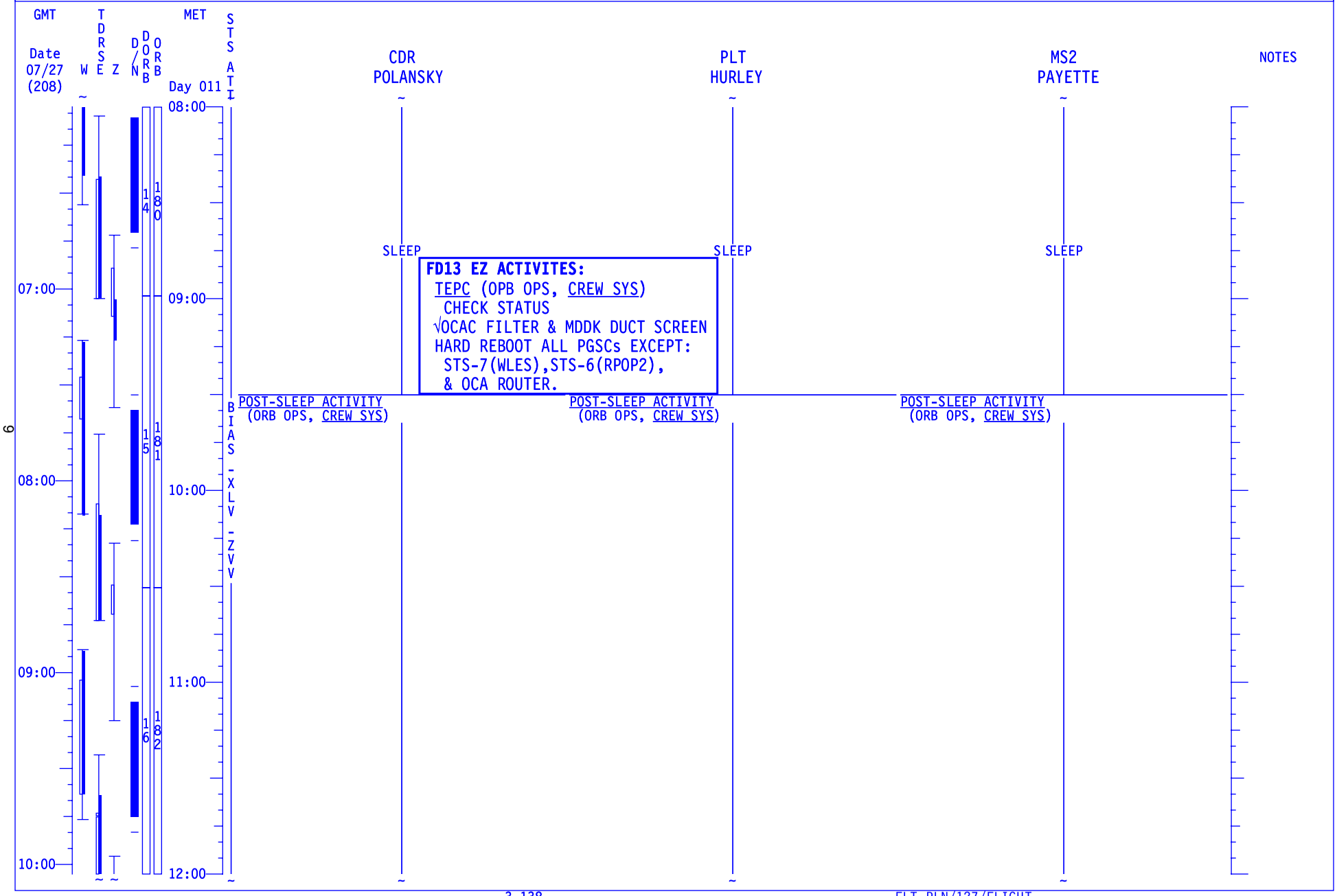

STS-127 FD (13)

GMT Date 07/27 (208) | W | TDRSE | Z | D/N | DORB | ORB | MET Day 011 | STS ATT

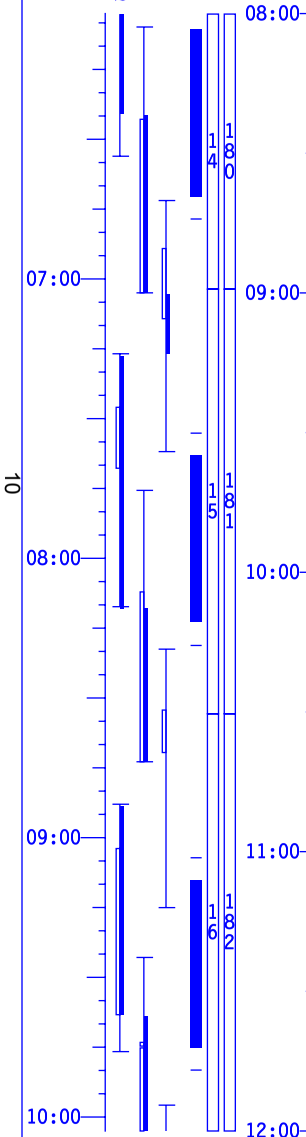

08:00 09:00 10:00 11:00 12:00

BIAS-XLV-ZVV

MS1 CASSIDY	MS3 MARSHBURN	MS4 WOLF	NOTES
SLEEP	SLEEP	SLEEP	
POST-SLEEP ACTIVITY (ORB OPS, CREW SYS)	POST-SLEEP ACTIVITY (ORB OPS, CREW SYS)	LIQUID SLVA CLCT (ORB OPS, SDBI) POST-SLEEP ACTIVITY (ORB OPS, CREW SYS)	
EVA SYS: 1.211 HYGIENE BREAK Start no earlier than 8:40 hrs from the end of: 1.206 10.2 PSIA CAMPOUT MASK PREBREATHE MCC-H performs Steps 1-4,16-20 & 23	EVA SYS: 1.211 HYGIENE BREAK Start no earlier than 8:40 hrs from the end of: 1.206 10.2 PSIA CAMPOUT MASK PREBREATHE MCC-H performs Steps 1-4,16-20 & 23	MDDK STATUS CHECK(ASSY OPS, P/L) Steps 1 EVA SYS: 1.211 HYGIENE BREAK Steps 21-25 MCC-H performs Step 23	
EVA SYS: 1.216 EVA PREP	EVA SYS: 1.216 EVA PREP	EVA SYS: 1.216 EVA PREP	

REPLANNED

STS-127 FD (13)

GMT Date 07/27 (208) | W | TDRSE | Z | D/N | DORB | ORB | MET Day 011 | STS ATT

CDR POLANSKY	PLT HURLEY	MS2 PAYETTE	NOTES
POST-SLEEP ACTIVITY (ORB OPS, CREW SYS)	POST-SLEEP ACTIVITY (ORB OPS, CREW SYS)	POST-SLEEP ACTIVITY (ORB OPS, CREW SYS)	
EVA 5 INHIBIT PAD (EVA, TIMELINES)	PWR FILL (ORB OPS, ECLS) Perform Water Fill #2 Fill dur. ~28 min Ref. MSG 057		
DAILY TRANSFER LIST UPDATE Ref. Transfer List & MSG 119			
IMU STAR OF OPPTY ALIGN (ORB OPS, GNC)	PWR TRANSFER Transfer 1 PWR to ISS		
	L17 Check MCIU filter screen	PWR FILL (ORB OPS, ECLS) Perform Water Fill #3 Fill dur. ~27 min Ref. MSG 057	
EXERCISE		PWR FILL (ORB OPS, ECLS) Perform Water Fill #4 Fill dur. ~27 min Ref. MSG 057	
P/TV07 EVA (PHOTO/TV, SCENES) SETUP		PWR TRANSFER Transfer 2 PWRs to ISS	
N2 REPRESS USING PAYLOAD N2 VLVS [A]			
P/TV07 EVA (PHOTO/TV, SCENES) OPS [A] N2 REPRESS USING PAYLOAD N2 VLVS (ORB OPS, ECLS) Steps 3-7 Ref. MSG 116, item 3		SHUTTLE/ISS H2O CNTR FILL (ORB OPS, ECLS) Init Fill #7, Ref. MSG 057	
	EXERCISE		
	TRANSFER OPS Ref. Transfer List & MSG 119	EXERCISE	

Time scale: 11:00, 12:00, 13:00, 14:00; 12:00, 13:00, 14:00, 15:00, 16:00

BIAS-XLV-ZVV

3-140

FLT PLN/127/FLIGHT

STS-127 FD (13)

GMT Date 07/27 (208) | W | TDRS E | Z | D/N | DORB 1 2 3 | ORB 183 184 185 | MET Day 011 | STS ATT BIAS -XLV -ZVV

MET	MS1 CASSIDY	MS3 MARSHBURN	MS4 WOLF	NOTES
12:00	EVA SYS: 1.216 EVA PREP	EVA SYS: 1.216 EVA PREP	EVA SYS: 1.216 EVA PREP	
13:00	EVA SYS: 1.220 EMU PURGE	EVA SYS: 1.220 EMU PURGE	EVA SYS: 1.220 EMU PURGE	
	EVA SYS: 1.225 EMU PREBREATHE	EVA SYS: 1.225 EMU PREBREATHE	EVA SYS: 1.225 EMU PREBREATHE	
14:00	EVA SYS: CREWLOCK DEPRESS (CC)	EVA SYS: CREWLOCK DEPRESS (CC)	EVA SYS: CREWLOCK DEPRESS (CC)	
	EVA SYS: CREWLOCK POST DEPRESS (CC)	EVA SYS: CREWLOCK POST DEPRESS (CC)	EVA SYS: CREWLOCK POST DEPRESS (CC)	
	EVA SYS: CREWLOCK EGRESS (CC) Ref. MSG 113	EVA SYS: CREWLOCK EGRESS (CC) Ref. MSG 113	IVA SUPPORT FOR EVA 5 Ref. MSG 113, 120 & 121	
	EVA 5 SETUP Ref. MSG 113	EVA 5 SETUP Ref. MSG 113		
15:00	STP SHUFFLE TO SO Ref. MSG 113	STP SHUFFLE TO SO Ref. MSG 113		
	Z1 PATCH PANEL Ref. MSG 113	SPDM COVERS Ref. MSG 113		
16:00				

REPLANNED

STS-127 FD (13)

GMT Date 07/27 (208) | W | TDRS E | Z | D/N | DORB | ORB | MET Day 011 | STS ATT

CDR POLANSKY | PLT HURLEY | MS2 PAYETTE | NOTES

16:00

P/TV07 EVA
(PHOTO/TV, SCENES) OPS

TRANSFER OPS
Ref. Transfer List & MSG 119

SHUTTLE/ISS H2O CNTR FILL
(ORB OPS, ECLS) FILL TERM

CWC TRANSFER
Transfer 1 CWC to ISS

NO EXERCISE

[VE INSTALL/
PAS DEPLOY]

B N2 REPRESS USING PAYLOAD N2 VLVS
(ORB OPS, ECLS) Steps 8-12

15:00

17:00

N2 REPRESS USING PAYLOAD N2 VLVS B
P/TV07 EVA
(PHOTO/TV, SCENES) OPS

16:00

18:00

MEAL | MEAL | MEAL

BIAS-XLV-ZVV

17:00

P/TV07 EVA
(PHOTO/TV, SCENES) OPS

TRANSFER OPS
Ref. Transfer List & MSG 119

19:00

18:00

20:00

3 | 185
4 | 186
5 | 187
6 | 188

REPLANNED

STS-127 FD (13)

GMT Date 07/27 (208) | W | TDRS E | Z | D/N | DORB 3 4 5 6 | ORB 185 186 187 188 | MET Day 011

STS ATT: BIAS -XLV -ZVV

MS1 CASSIDY	MS3 MARSHBURN	MS4 WOLF	NOTES
Z1 PATCH PANEL Ref. MSG 113	SPDM COVERS Ref. MSG 113	IVA SUPPORT FOR EVA 5 Ref. MSG 113, 120 & 121	
FWD INSTALLED VE Ref. MSG 113 & 120 EXERCISE CONSTRAINT	FWD INSTALLED VE Ref. MSG 113 & 120 EXERCISE CONSTRAINT		**NO EXERCISE** [VE INSTALL/ PAS DEPLOY]
AFT INSTALLED VE/LTA RECONFIG Ref. MSG 113 & 120 EXERCISE CONSTRAINT	AFT INSTALLED VE/LTA RECONFIG Ref. MSG 113 & 120 EXERCISE CONSTRAINT		
S3 ZENITH OUTBOARD PAS Ref. MSG 113 & 121 EXERCISE CONSTRAINT	S3 ZENITH OUTBOARD PAS Ref. MSG 113 & 121 EXERCISE CONSTRAINT		
STP RELOCATE Ref. MSG 113	STP RELOCATE Ref. MSG 113		

REPLANNED

STS-127 FD (13)

GMT Date 07/27 (208) | W | TDRSE | Z | D/N | DORB | ORB | MET Day 011 | STS ATT

CDR POLANSKY	PLT HURLEY	MS2 PAYETTE	NOTES
P/TV07 EVA (PHOTO/TV, SCENES) OPS	TRANSFER OPS Ref. Transfer List & MSG 119	P/TV08 EXTERNAL SURVEY (PHOTO/TV, SCENES) SETUP	
		P/TV08 EXTERNAL SURVEY (PHOTO/TV, SCENES) OPS	
TRANSFER TAGUP Coordinate with xfer counterpart	TRANSFER TAGUP Coordinate with xfer counterpart	SHUTTLE/ISS H2O CNTR FILL (ORB OPS, ECLS) Init Fill #8, Ref. MSG 057	
LOW BACK PAIN QUEST (ASSY OPS, PAYLOADS)		LOW BACK PAIN QUEST (ASSY OPS, PAYLOADS)	
TRANSFER BRIEF Call down status to MCC		PRE-SLEEP ACTIVITY (ORB OPS, CREW SYS)	
PRE-SLEEP ACTIVITY (ORB OPS, CREW SYS)	LOW BACK PAIN QUEST (ASSY OPS, PAYLOADS)		
	PRE-SLEEP ACTIVITY (ORB OPS, CREW SYS)		
PRIVATE MEDICAL CONFERENCE L9 PAYLOAD STATION A/G(two) -OFF Perform via A/G 2			
PRE-SLEEP ACTIVITY (ORB OPS, CREW SYS)		SHUTTLE/ISS H2O CNTR FILL (ORB OPS, ECLS) FILL TERM	
		CWC TRANSFER Transfer 1 CWC to ISS	
		PRE-SLEEP ACTIVITY (ORB OPS, CREW SYS)	

Time scale: 19:00, 20:00, 21:00, 22:00; Day 011: 20:00, 21:00, 22:00, 23:00, 00:00

Z: 6, 7, 8; ORB: 188, 189, 190

BIAS-XLV-ZVV

REPLANNED

STS-127 FD (13)

GMT Date 07/27 (208) | W | TDRS E | Z | D/N | DORB 6 7 8 | ORB 188 189 190 | MET Day 011 | STS ATT BIAS -XLV -ZVV

MS1 CASSIDY

20:00
STP RELOCATE
Ref. MSG 113
EVA 5 CLEANUP AND INGRESS
Ref. MSG 113

19:00 21:00
EVA SYS: PRE REPRESS (CC)
EVA SYS: CREWLOCK REPRESS (CC)

EVA SYS: 1.240 POST EVA
With H2O
Steps 37, 39, & 66 not req'd
MCC will perform Steps 43 & 67
Use PWR s/n 1027 then PWR s/n 1015,
as req'd, for EMU WATER RECHARGE
Ref: 127 EMU CTCC

20:00 22:00
PRE-SLEEP ACTIVITY
(ORB OPS, CREW SYS)

21:00 23:00

22:00 00:00

MS3 MARSHBURN

STP RELOCATE
Ref. MSG 113
EVA 5 CLEANUP AND INGRESS
Ref. MSG 113

EVA SYS: PRE REPRESS (CC)
EVA SYS: CREWLOCK REPRESS (CC)

EVA SYS: 1.240 POST EVA
With H2O
Steps 37, 39, & 66 not req'd
MCC will perform Steps 43 & 67
Use PWR s/n 1027 then PWR s/n 1015,
as req'd, for EMU WATER RECHARGE
Ref: 127 EMU CTCC

LOW BACK PAIN QUEST (ASSY OPS, PAYLOADS)
PRE-SLEEP ACTIVITY
(ORB OPS, CREW SYS)

MS4 WOLF

IVA SUPPORT FOR EVA 5
Ref. MSG 113, 120 & 121

EVA SYS: PRE REPRESS (CC)
EVA SYS: CREWLOCK REPRESS (CC)

EVA SYS: 1.240 POST EVA
With H2O
Steps 37, 39, & 66 not req'd
MCC will perform Steps 43 & 67
Use PWR s/n 1027 then PWR s/n 1015,
as req'd, for EMU WATER RECHARGE
Ref: 127 EMU CTCC

MDDK STATUS CHECK(ASSY OPS, P/L) Steps 1&2
PRE-SLEEP ACTIVITY
(ORB OPS, CREW SYS)

NOTES

REPLANNED

STS-127 FD (13)

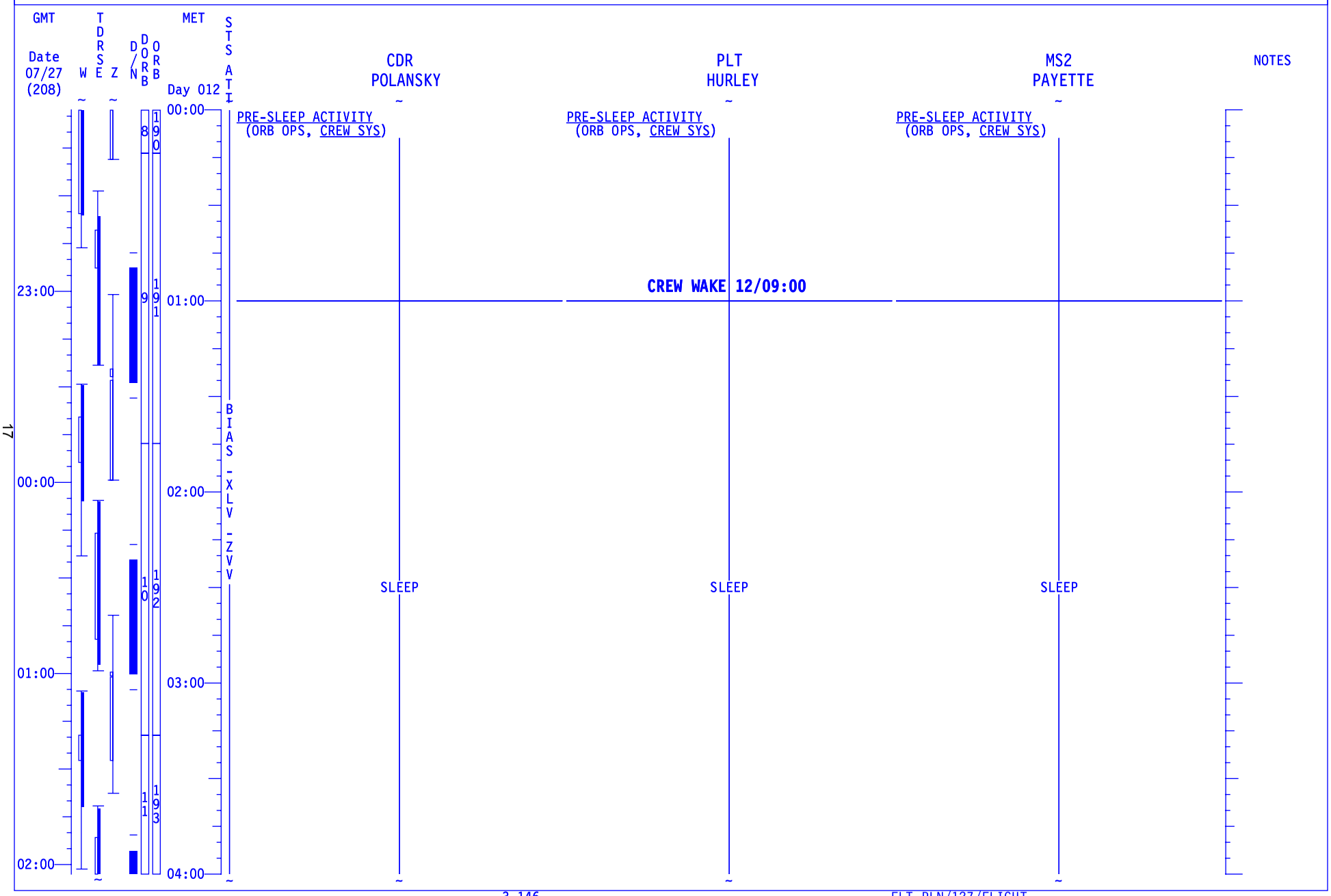

REPLANNED

STS-127 FD (13)

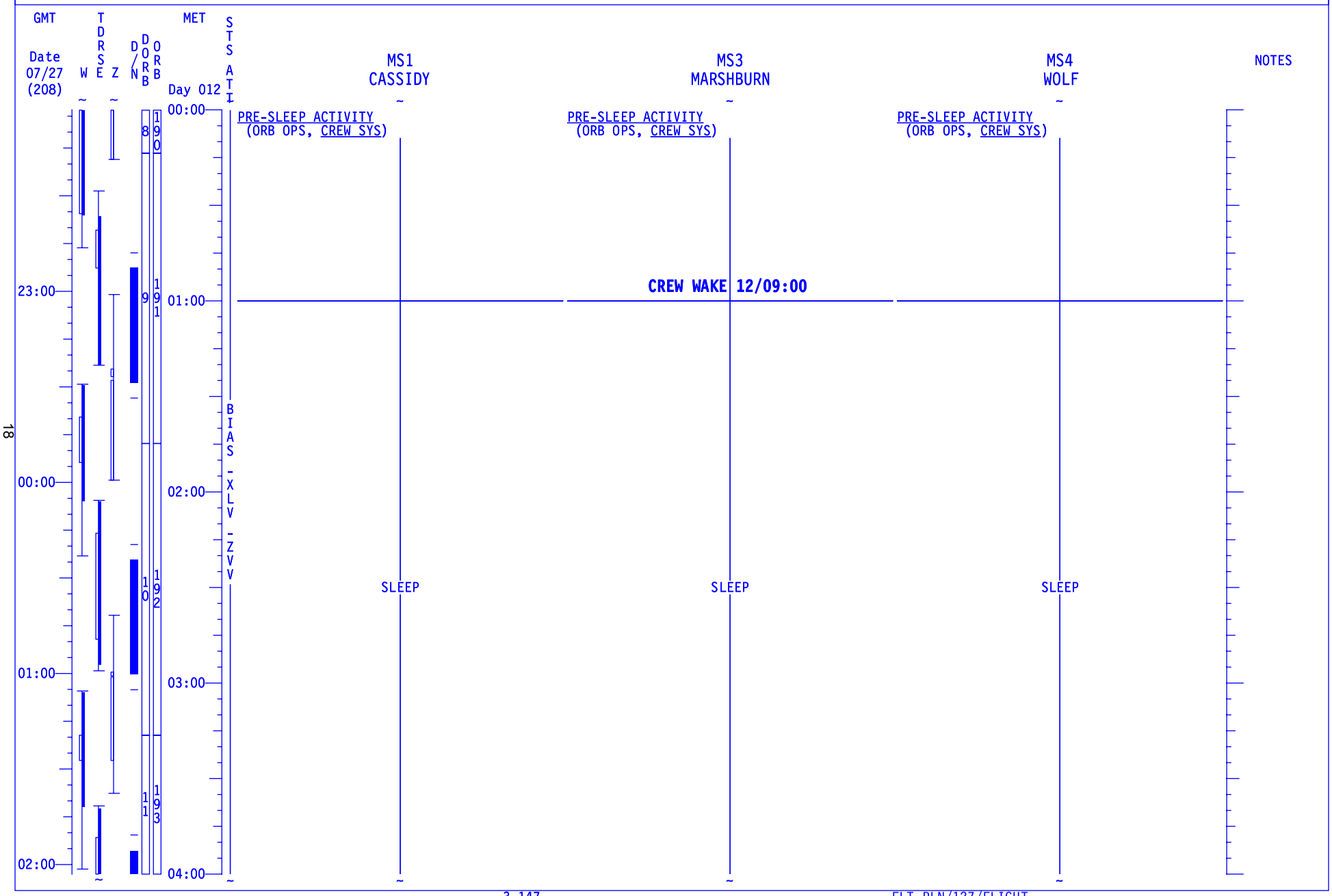

MSG 117 - FD13 MISSION SUMMARY

Good morning, Endeavour!

Most Shuttle crews are content with three or four EVAs on a flight. Today you'll be joining a very select group by doing your fifth! Thanks for going the extra mile...or the extra 125,000 miles, as the case may be.

Here in Mission Control, the planning and replanning work for your very ambitious robotics and EVA tasks is nearly complete, and most of the talk is about completing transfer and undocking. You're in the home stretch now!

YOUR CURRENT ORBIT IS: 188 X 186 NM

NOTAMS:

NOTAMS – ONE CHANGE

EDW - EDW IN USE. EDT ELS DAY / VFR ONLY.
EDW - LAKEBED RWY 15/33 - GREEN. RWY 18L - UNUSABLE.
NOR - LAKEBED RUNWAYS GREEN.
FMH - RWY 05/23 CLOSED.
GUA - RWY 24R END LIGHTS OTS.
GUA - RWY 06R/24L CLOSED.
INN - CLOSED.
AMB - CLOSED.
ESN - RWY 03R/21L CLOSED.
IKF - NOT USABLE. NO AGREEMENT.
BEN - NOT RECOMMENDED/NOT SUPPORTED.
DOV - RWY 01/19 CLOSED.

NEXT 2 PLS OPPORTUNITIES:

EDW22 ORB 188 – 11/20:30 FEW080 SCT200 7 220/08P13 (ORB 189: 220/11P21)
EDW22 ORB 204 – 12/20:54 FEW300 7 220/11P19

OMS TANK FAIL CAPABILITY:

L OMS FAILS: NO
R OMS FAILS: NO

LEAKING OMS PRPLT BURN:

L OMS LEAK: ALWAYS BURN RETROGRADE
R OMS LEAK: ALWAYS BURN RETROGRADE

OMS QUANTITIES(%)

Subtract interconnect counter for current OMS quantities.

L OMS OX = 39.5 R OMS OX = 39.7
FU = 39.1 FU = 39.4

END OF PAGE 1 OF 2, MSG 117

MSG 117 - FD13 MISSION SUMMARY

DELTA V AVAILABLE:

OMS	395 FPS
ARCS (TOTAL ABOVE QTY1)	42 FPS
TOTAL IN THE AFT	437 FPS
ARCS (TOTAL ABOVE QTY2)	74 FPS
FRCS (ABOVE QTY 1)	28 FPS
AFT QTY 1	81 %
AFT QTY 2	43 %

THERE ARE NO FAILURE/IMPACT/WORK AROUNDS FOR TODAY.

END OF PAGE 2 OF 2, MSG 117

MPC TRANSFER

Refer to diagram on P T/V C/L FS pg 2-14 as needed.

1. Power down MPC and power supply:

O19		TV PWR – OFF
		DC UTIL PWR MNA – OFF
MPC		PWR – OFF
	PWR SPLY	DC PWR SPLY PWR SW1 – OFF

2. Demate and stow (in L10A1) the MPC-G1 Cable (Firewire cable) and MPC-DTV MUX Cable from MPC.

3. Demate MPC DC Pwr Cable from DC Power Supply (White Brick).

4. Reconfigure Power:

O19	TV PWR – ON as reqd
	DC UTIL PWR MNA – ON as reqd

5. Transfer to ISS the following 3 items per Transfer List Resupply Items 802, 802.1, and 802.2: MPC, DC Power Supply (white brick), MPC DC Supply Cable.

Mark and Doug,

Once again it was great to talk with you last night! There aren't too many items for you to complete today, but we do have several questions. Since you undock tomorrow, please call down as you have questions throughout the day, so we can help you with them real-time.

Transfer Notes

- **MPC Transfer** – Please reference **MSG 118 MPC Transfer** for powering down and disconnecting the shuttle MPC prior to transfer to ISS. We have also added resupply items 802, 802.1, and 802.2 to your transfer list. This procedure is not specifically called out in today's timeline, so please complete it during your transfer ops time.

- **Shuttle Food** – ISS greatly appreciates your willingness to leave behind some of your food. We have added resupply item 804 to your transfer list with directions for how we'd like the food transferred to ISS. In short, you'll retrieve empty 0.5 CTBs from ISS in which to pack and transfer the food.

- **Blood Collection Kit** – In response to last night's comment that you could not locate Blood Collection Kit s/n 1009 (Return Item 704.1), we were expecting this kit to be located at LAB1O3 following the FD06 IMAK Unpack scheduled on Tim. Please check with him to determine if this kit was stowed in a different location. Note that this kit contains the SDBI Blood Collection items required on the middeck post-undock.

- **TVIS Cards** – We are expecting that Romanenko's and Thirsk's TVIS PCMCIA cards (Return Items 402.5 and 402.6) should be ready to pack for return, since our understanding is that they have been using their new cards already. If they are concerned about the data on the old cards, please have them download the data to the Medical Equipment Computer (MEC) prior to packing for return.

Transfer Questions

- **Holter Preparation Kits** – First of all, no more action is required for Holter Preparation Kit s/n 006, as it's in the correct configuration for return. To determine if JAXA would like the kit with no serial number returned, please verify the following:

  1. If the ziplock is hand-labeled "Holter Trash Bag," please leave it packed for return.

  2. If the ziplock is not labeled, please verify that this kit does not include any "Patient Cables" (reference **MSG 122 (20-0617)** electronically for a photo of this cable).

     a. If cables present, please stow entire ziplock in JPM1O3_B1 (in 0.5 CTB, s/n 1472).
     b. If cables not present, please leave the ziplock packed for return.

The Transfer List Excel file, FD13_Transfer_List_STS127.xls, locations are:

- Shuttle: **C:\OCA-up\transfer** (KFX machine)
- Station: **K:\OCA-up\transfer**

Remaining Transfer Items

As you requested, we've included a list below of all the items we think should be completed on FD13 and FD14. We'll provide you with the FD14 list again in tomorrow's transfer message.

FD13

- **Resupply Items:** 802, 802.1, 802.2, 804
- **Return Items:** 402, 402.5, 402.6, 412, 413, 414, 418, 704.1, 724, 903.2, 907

FD14

- **Resupply Items:** 47, 48, 803
- **Return Items:** 403, 403.1, 403.2, 403.3, 700, 701, 702, 703, 706, 707, 708, 709, 710, 711, 712, 713, 714, 715, 716, 719, 912

Please update Transfer List book as follows:

In the **RESUPPLY** tab:
Replace the following page:
Resupply-13

In the **RETURN** tab:
Replace the following pages:
Return-4 and -16

Have a nice day!

- The 2J/A Transfer Team

Tom, Chris and Dave,
Attached you find the PAS and VE camera tie-down plans.

1. PAS tie-down plan - This plan is basically the same as the one we referenced you to in section 18 but has been updated with site specific details. Reference message 20-0615 (121) for the PAS tie-down plan.

2. VE camera MLI tie-down for launch location - This plan would be implemented after the cribsheet steps have been completed on pg16-3 section V blocks B & D and pg 16-5 section IX blocks B &D. These steps still need to be coordinated with MCC-H prior to proceeding.

   During the conference we mentioned a tie down plan involving wire ties to recreate the ground path for the MLI. After all the dust settled, that plan is NO GO so we will need to attempt to establish a new grounding path by reinstalling the grounding tab to a bolt (photos of the grounding tabs are below the procedures). Only the upper MLI is required, so we have included steps to remove the lower MLI, install one grounding tab from the upper MLI and use two long wire ties to cinch the MLI around the camera. We believe it will be easier to remove the lower MLI and install wire ties around the MLI than to install two grounding tabs simultaneously. In scenario “a” below, none of the grounding tabs have been released, so both MLI will be left in place. The wire ties used to cinch the MLI will need to be secured to structure as you are installing them to prevent them from floating away should they break sometime in the future. For example, you could wrap it around the microconical or thru the launch lock tether loop (if it is still installed). If the launch lock is left attached to the JEF with no VE, it will also require the installation of the upper MLI, grounding tab, and wire tie to cinch it down.

   a. If the first upper launch lock (LL) bolt fails (bolt 1 or 2) leaving the MLI grounding tabs still attached to the other upper LL bolt, no further crew action is required for the grounding tabs. The MLI (upper and lower) will need to be closed up and the I/F cable reinstalled if not already done.
   b. If the first upper LL bolt has been released, but the second jams and is partly released (failing stuck in transit and thus releasing the other set of grounding tabs) a new MLI ground path must be established by completing the following:
      (1) remove lower VE MLI; stow in bag
      (2) position upper VE MLI grounding tab under bolt shoulder on any non-failed VE LL bolt
      (3) drive non-failed bolt back in to complete grounding circuit at PGT [B5, CW2, 30.5]
      (4) cover VE camera with upper VE MLI
      (5) use two long wireties to cinch MLI to minimize exposure of VE as required, securing wire ties to structure as you wrap them
      (6) reinstall I/F cable if removed

c. If either of the lower LL bolts (bolt 3 and/or 4) cannot be released, the VE camera can be removed leaving the launch lock behind on the JEF (assuming bolts 1 and 2 are released). The LL will need to be covered with MLI and a new ground path established by completing the following:
   (1) remove lower VE MLI; stow in bag
   (2) position upper VE MLI grounding tab under bolt shoulder on non-failed VE LL bolt. May require loosening an installed bolt.
   (3) drive non-failed bolt back in to complete grounding circuit at PGT [B5, CW2, 30.5]
   (4) cover LL with upper VE MLI
   (5) use one or two long wireties to cinch MLI to minimize exposure of LL as required, securing wire ties to structure as you wrap them

d. If either of the stanchion bolts cannot be released, the upper MLI needs to be reinstalled and a new MLI grounding path establish by completing the following:
   (1) position upper VE MLI grounding tab under bolt shoulder on non-failed stanchion bolt. May require loosening an installed bolt.
   (2) drive non-failed bolt back in to complete grounding circuit at PGT [B4, CW2, 30.5]
   (3) cover VE with upper VE MLI (may need to rotate MLI 180°)
   (4) use two long wireties to cinch MLI to minimize exposure of VE as required, securing wire ties to structure as you wrap them

3. The grounding tab cable has some stiffness to it and may be enough to help hold the grounding tab in place, if not you can retrieve the forceps from the A\L tool box (we will provide location details as needed) or you could consider taking the GP caddy with the vice grips in it with you to the JEF instead of dropping them at the A\L.

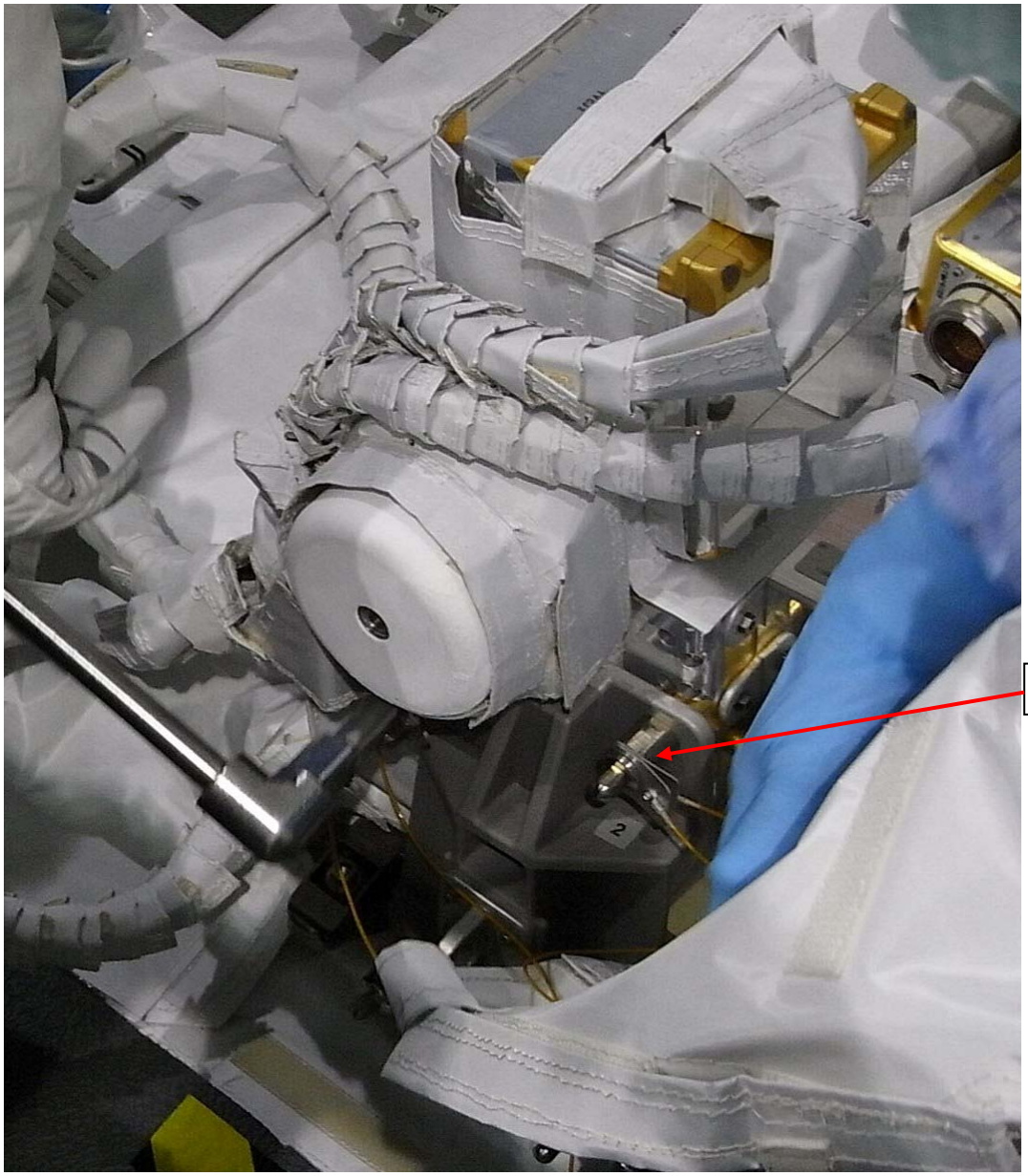
Grounding Tabs

2

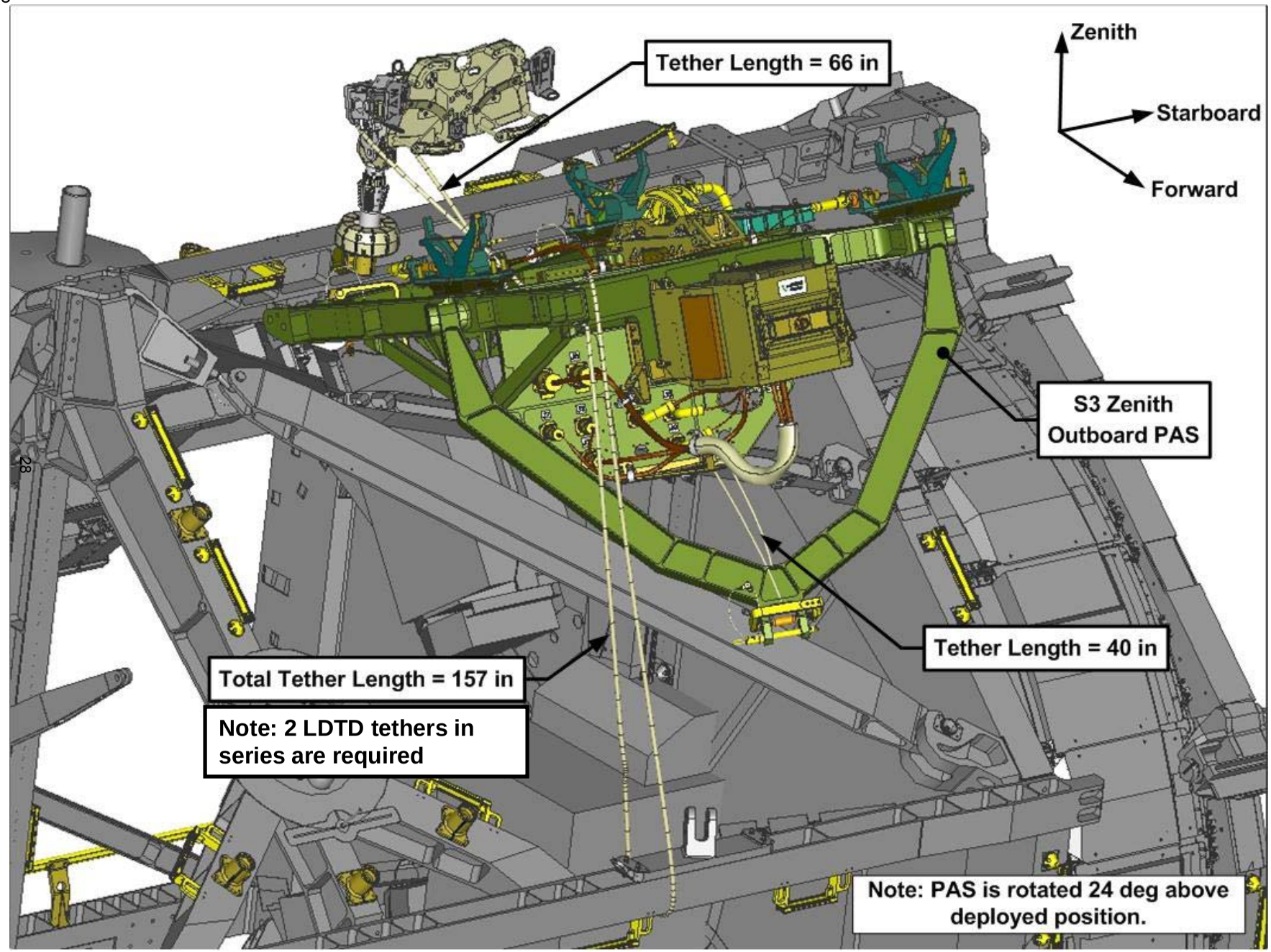
Zenith
Starboard
Forward
Tether Length = 66 in
S3 Zenith
Outboard PAS
Tether Length = 40 in
Total Tether Length = 157 in
Note: 2 LDTD tethers in
series are required
Note: PAS is rotated 24 deg above
deployed position.

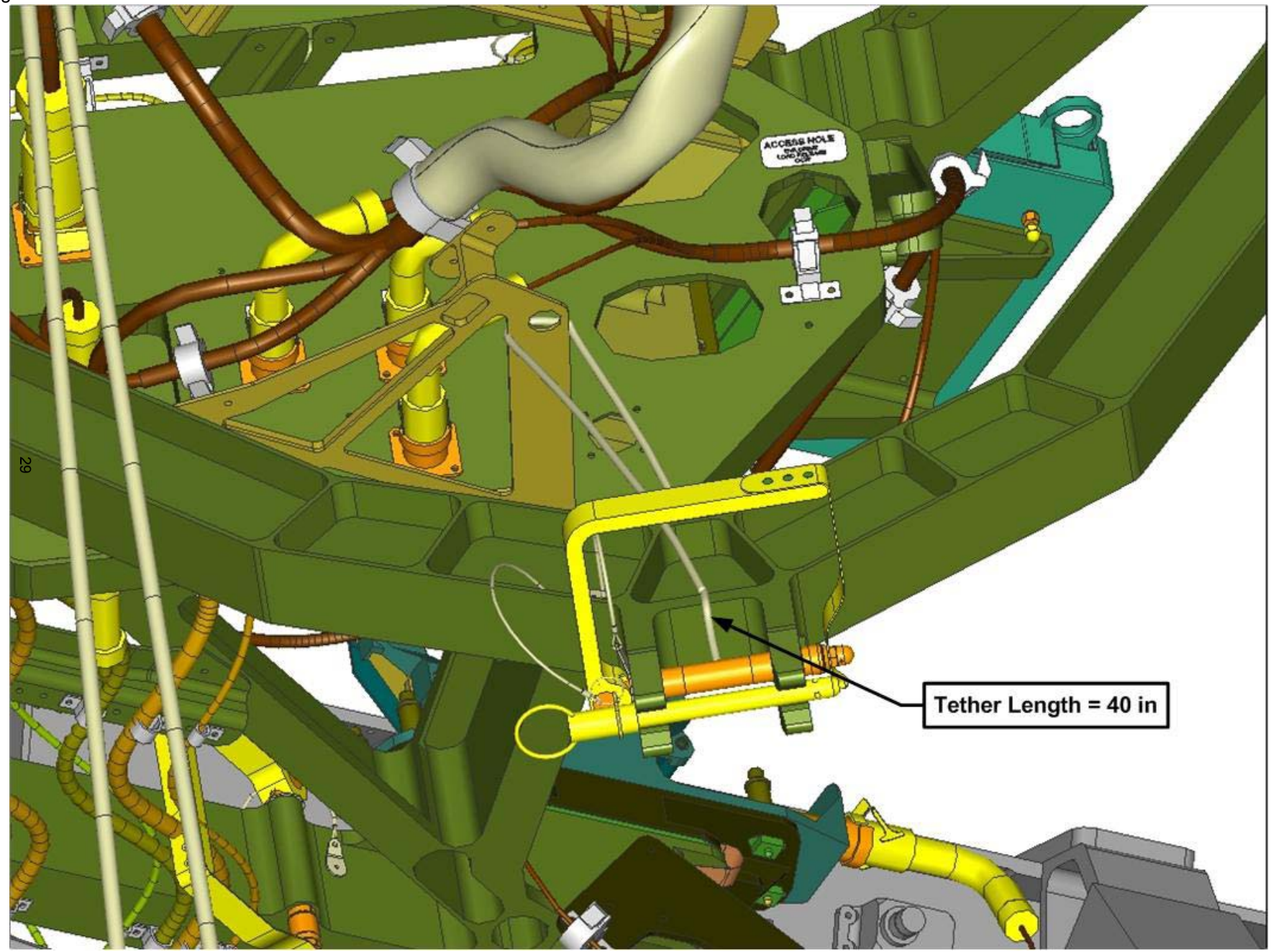
ACCESS HOLE
Tether Length = 40 in

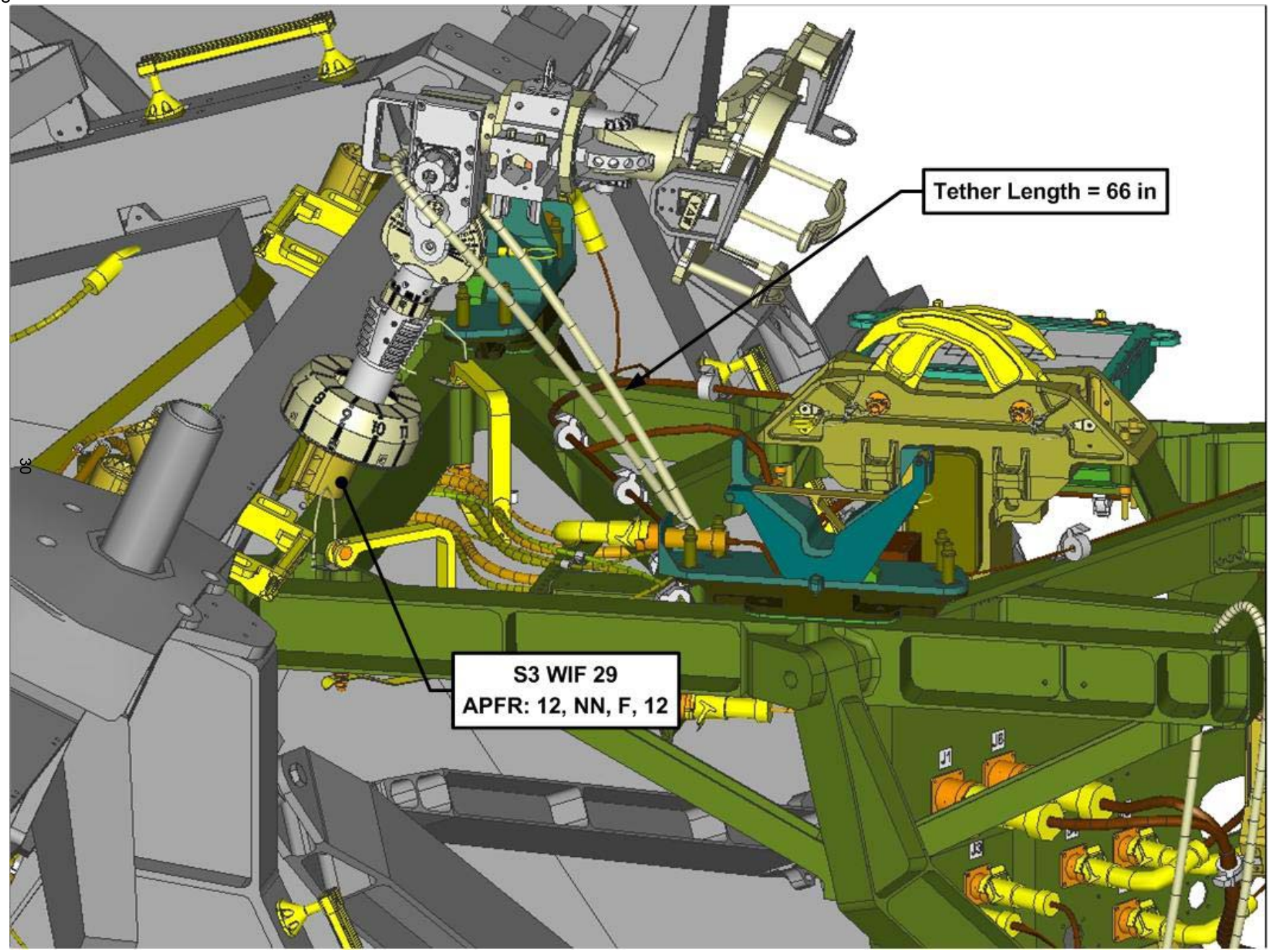
Tether Length = 66 in
S3 WIF 29
APFR: 12, NN, F, 12

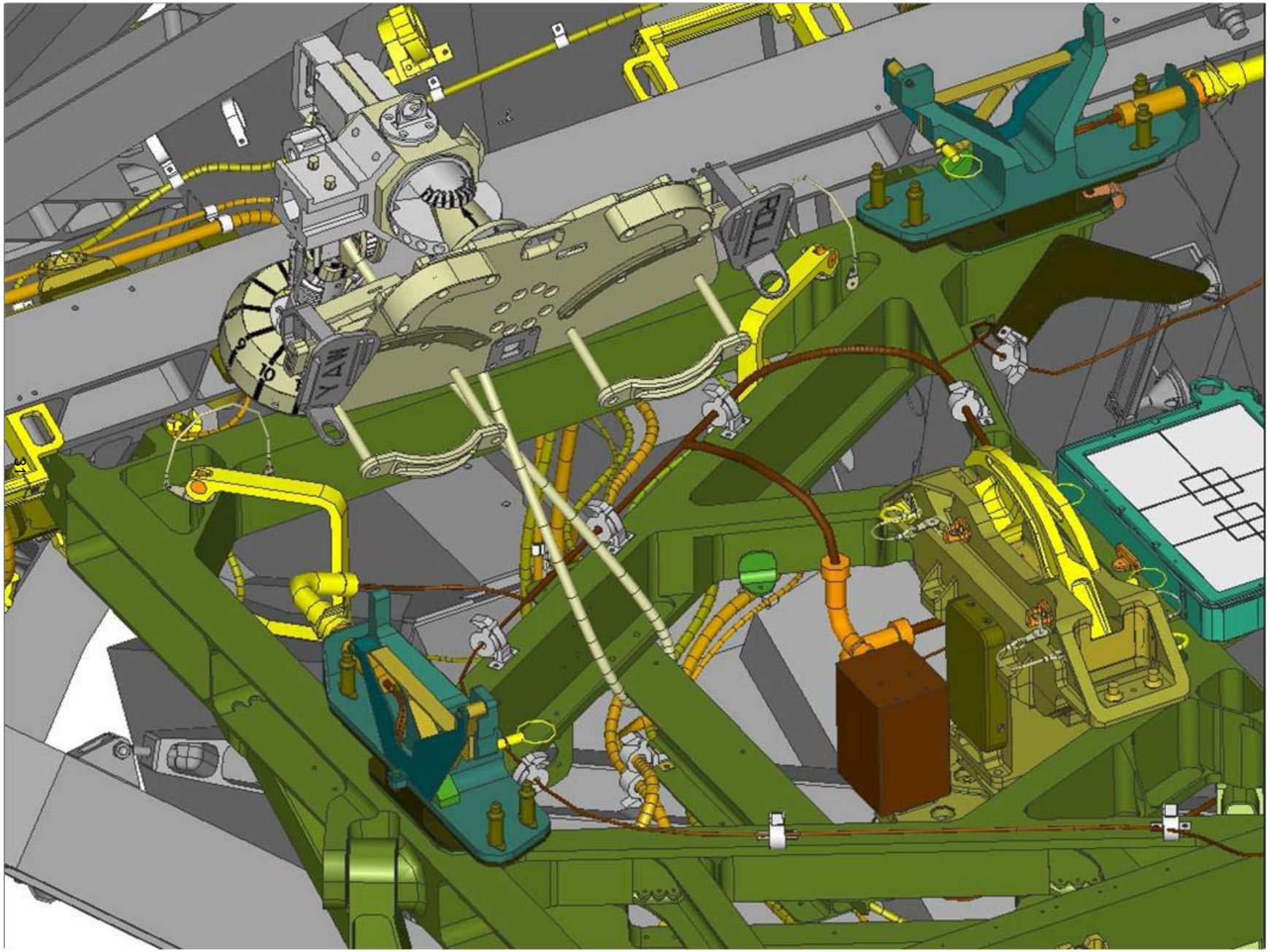
YAW
PITCH

Holter Patient Cable – Reference FD13 Transfer Message (MSG 119)

1
2
3
4
5
6
7
8
9
10
11
12
13
14
15
16
17

EXT A/L FLOOR (BAG F)

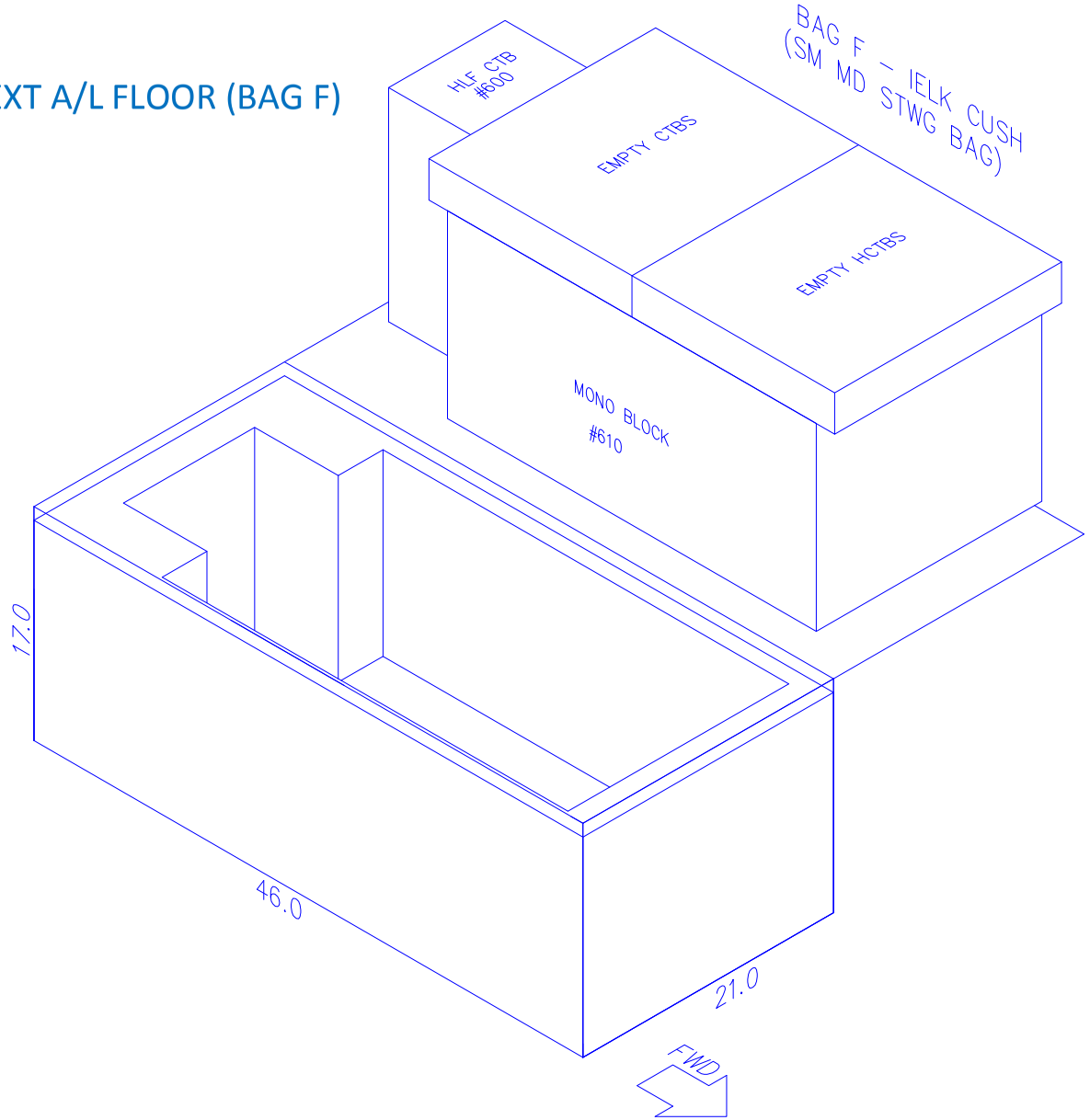

MD CEIL STBD 1 (BAG G)

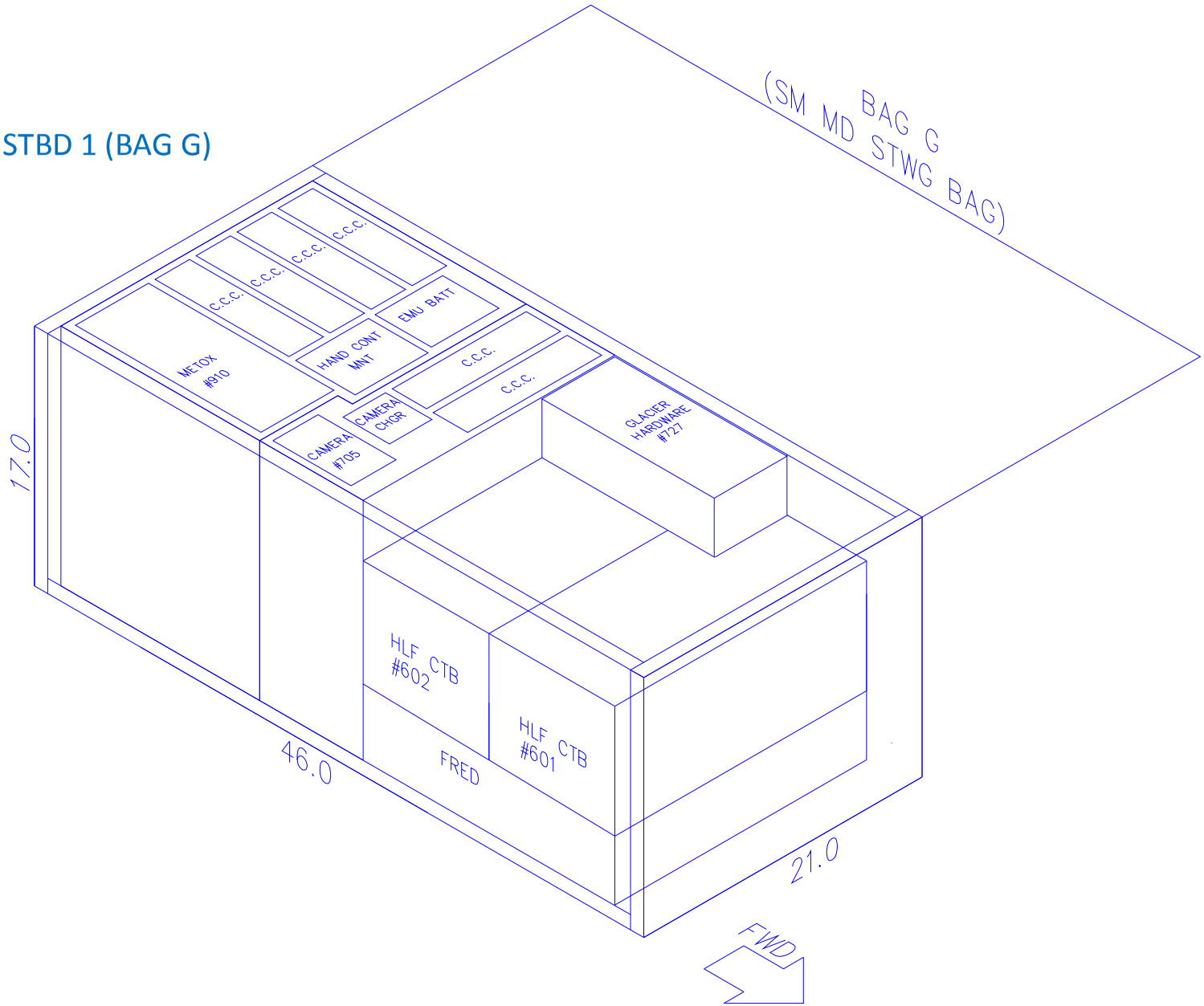

MD CEIL STBD 2 (BAG H)

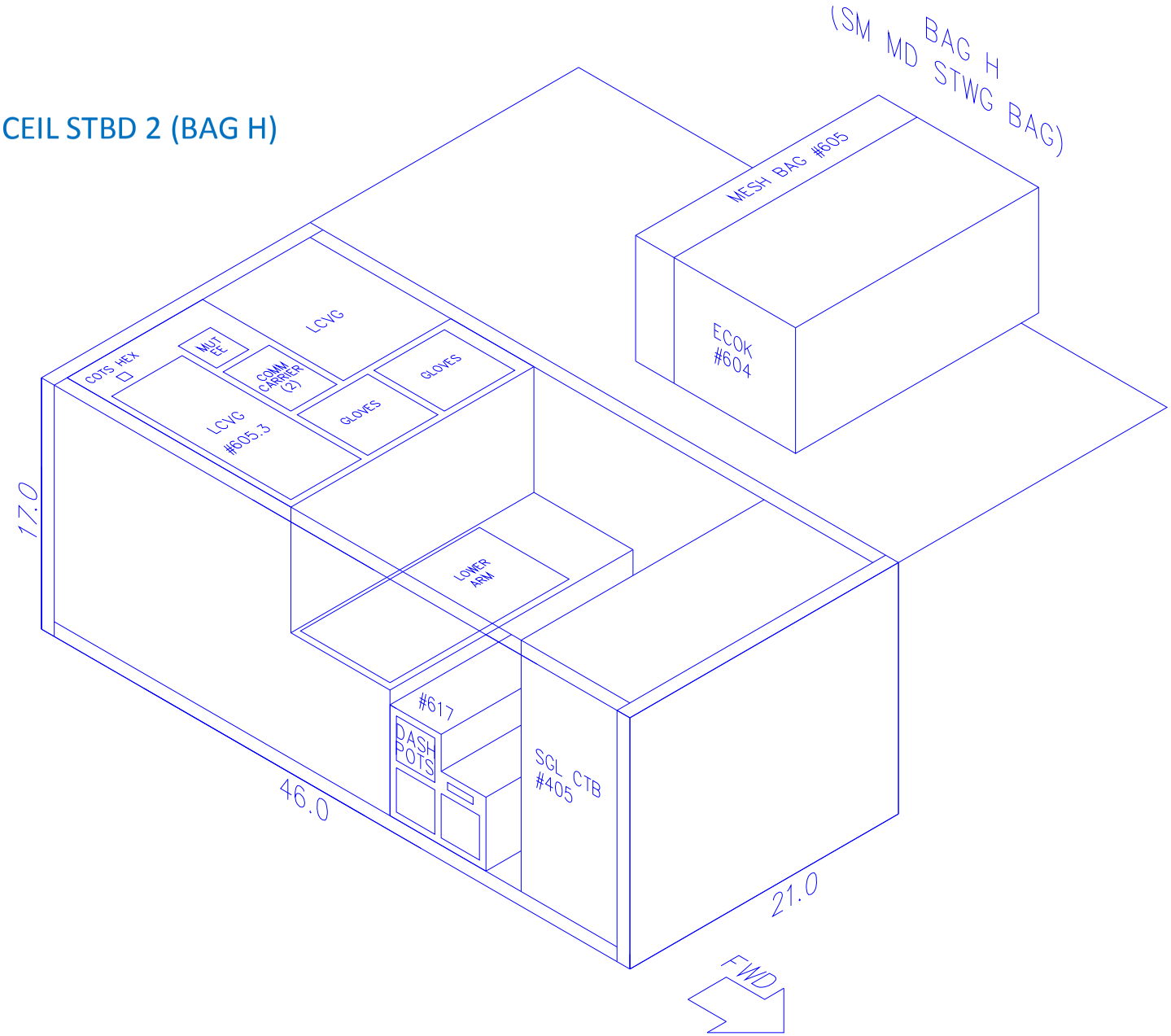

END OF PAGE 3 OF 4, MSG 123B

MD CEIL PORT 2 (BAG E)

NOTE: PLEASE USE ONE FOAM SHEET
TO WRAP AROUND METOX CANISTER

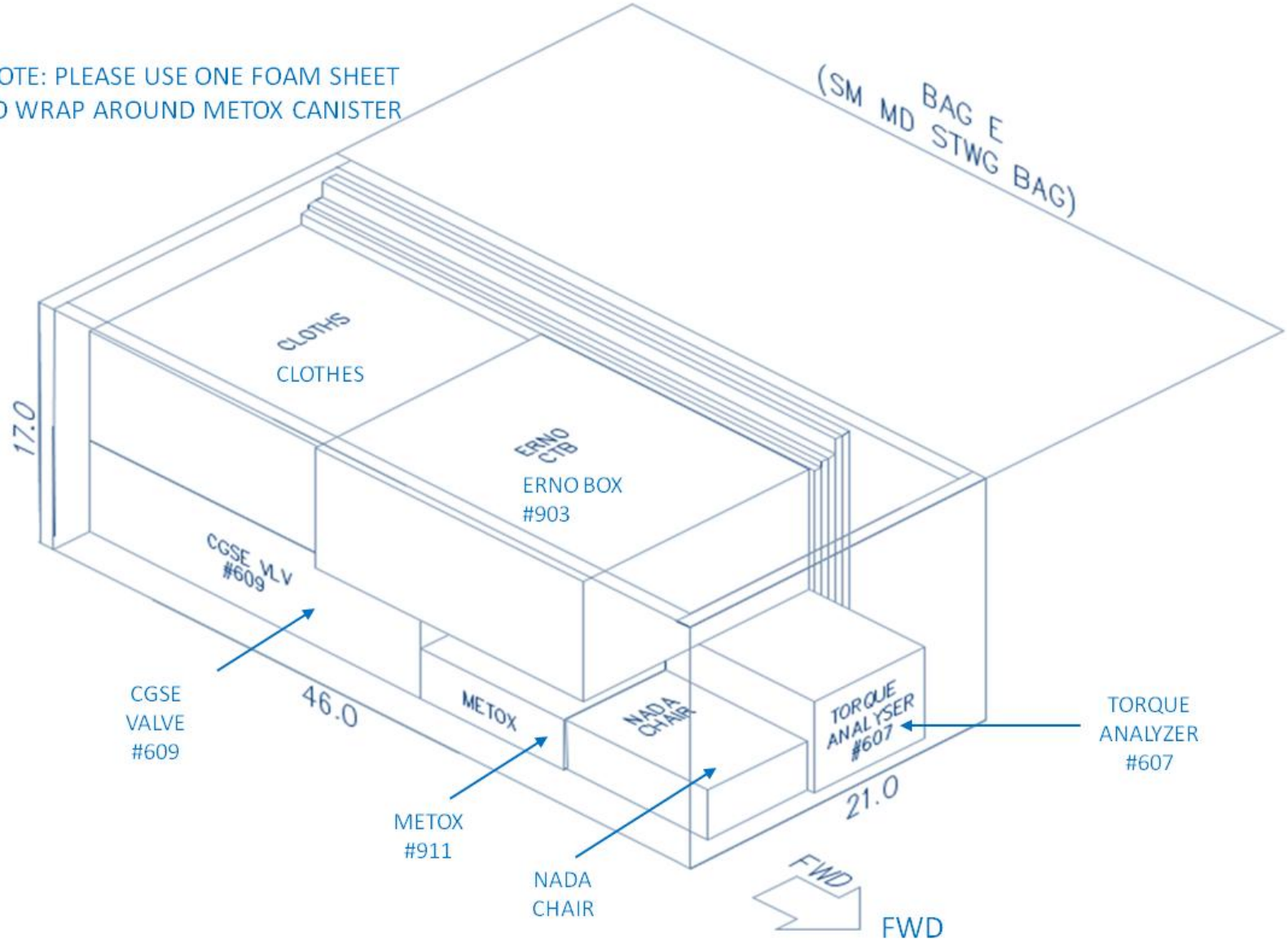

END OF PAGE 4 OF 4, MSG 123B