STS-127 / 2JA

FD 09 Execute Package

MSG	Page(s)	Title
067	1 - 18	FD9 Flight Plan Revision **(pdf)**
068	19 - 20	FD9 Mission Summary **(pdf)**
069A	21 - 22	FD9 Transfer Message **(pdf)**
073	23 - 29	Middeck Stowage Bag Layouts **(pdf)**
074	30 - 52	EVA4 P6 Battery R&R **(pdf)**
075	53 - 54	FD9 EVA Deltas **(pdf)**
076	55	EVA 4 Preliminary Summary Timeline **(pdf)**
077	56 - 57	MB COMFORT GLOVE ALTERATION **(pdf)**
070	---	FD8 MMT Summary **(pdf - Electronic Only)**

Approved by FAO: *T. Melroy*

Last Updated: Jul 23 2009 9:13AM GMT
JEDI *(**J**oint **E**xecute package **D**evelopment and **I**ntegration), v2.04.0003*

MSG INDEX

MSG NO.	TITLE
067	FD9 Flight Plan Revision
068	FD9 Mission Summary
069A	FD9 Transfer Message
070	FD8 MMT Summary
071	PAO Event Summary Message: WRAL-TV, Raleigh, NC / WCSH-TV, Portland, ME / WFTV-TV, Orlando, FL
072	PAO Event Summary Message: KLAS-TV, Las Vegas, NV / Fox News Radio / KHOU-TV, Houston, TX
073	Middeck Stowage Bag Layouts
074	EVA4 P6 Battery R&R
075	FD9 EVA Deltas
076	EVA 4 Preliminary Summary Timeline
077	MB COMFORT GLOVE ALTERATION

1. POST SLEEP CRYO CONFIG

For today's cryo config, O2 tanks 1, 3, and 4 and H2 tanks 1 and 5 will be active.

R1 O2,H2 MANF VLV TK1 (two) - OP (tb-OP)
O2 TK3 HTRS A,B (two) - AUTO

A11 CRYO TK4 HTRS O2 A,B (two) - AUTO

A15 CRYO TK5 HTR O2 A - OFF

2. ERCA QUESTION

We have noticed that you have been selecting the left lens on ERCA 16 during night passes. Did you attempt to open the iris and encounter a malfunction on the center lens or choose to use the left lens for other reasons?

3. JEF CAMERA

Since the installation of the JEF Fwd external camera was deferred, please use the alternate camera per procedure during the Exposed Payload transfer activity today. The JEF Fwd external camera was planned to use for both prime and backup view support.

4. EXERCISE AND ATTITUDE CONTROL CONSTRAINTS

Good News! Despite our initial concerns last night, the MER tells us you are GO for isolated and unisolated exercise (except IRED), as long as there are no concurrent thruster firings. Here's the full set of constraints, which we have incorporated into today's timeline.

1) Exercise
   a) No unisolated exercise (Shuttle ergometer, Velo, HC-1/SM Ergometer) with thruster hold or maneuver.
   b) No Orbiter Ergometer and HC-1/SM Ergometer at same time.
   c) No exercise on IRED is allowed at all in this configuration.

2) Manuevers
   a) VRCS maneuver preferred. RS MCS or USTO maneuver acceptable if necessary.
   b) USTO and VRCS hold acceptable. RS MCS hold acceptable if necessary.

We will be training some cameras on the temp stowed battery to watch it during exercise to validate our constraints.

5. EVA4 ROBOTICS PROCEDURE

For Doug and Julie: MSG 074 (20-0557) is the updated EVA4 robotics procedure. The procedure adds the Battery C and D R&Rs from the EVA3 procedure to the beginning of the EVA4 procedure.

6. FD9 CREW CHOICE DOWNLINK KU OPPORTUNITIES

TDRS	AOS	LOS	Duration
West	7/23:57	8/00:31	00:34
West	8/01:32	8/02:06	00:34

7. GLACIER SWAP

Reminder that during Glacier transfer today, the power interrupt time should not exceed 120 minutes.

8. LIOH PLAN UPDATE

On the mornings of FD10, 11 and 13 the plan will be to use a Russian LiOH can on the ISS in lieu of a US LiOH can in the Shuttle. A new LiOH cue card will be uplinked in the FD 10 Execute Package reflecting this change.

9. REPLACE PAGES 2-28 THROUGH 2-33 AND 3-90 THROUGH 3-99.

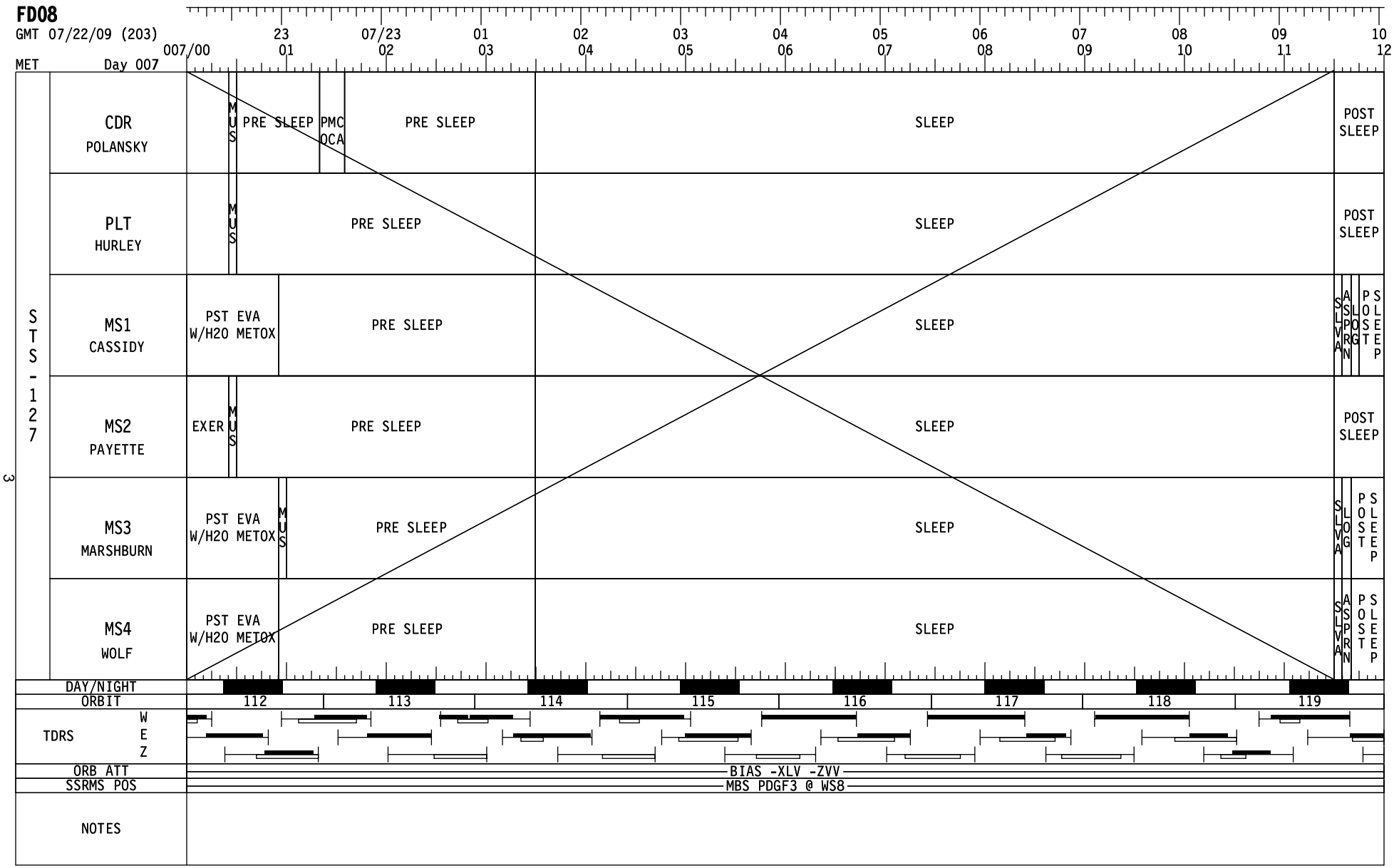
FD08
GMT 07/22/09 (203)
MET Day 007
007/00 23 01 07/23 02 01 03 02 04 03 05 04 06 05 07 06 08 07 09 08 10 09 11 10 12
STS-127
CDR POLANSKY
MUS PRE SLEEP PMC OCA PRE SLEEP SLEEP POST SLEEP
PLT HURLEY
MUS PRE SLEEP SLEEP POST SLEEP
MS1 CASSIDY
PST EVA W/H20 METOX PRE SLEEP SLEEP SLVA ASPORGN POST SLEEP
MS2 PAYETTE
EXER MUS PRE SLEEP SLEEP POST SLEEP
MS3 MARSHBURN
PST EVA W/H20 METOX MUS PRE SLEEP SLEEP SLVA LOG POST SLEEP
MS4 WOLF
PST EVA W/H20 METOX PRE SLEEP SLEEP SLVA ASPRN POST SLEEP
DAY/NIGHT
ORBIT
112 113 114 115 116 117 118 119
TDRS
W
E
Z
ORB ATT
BIAS -XLV -ZVV
SSRMS POS
MBS PDGF3 @ WS8
NOTES

FD08

GMT 07/22/09 (203)

MET Day 007

007/00 23 01 07/23 02 01 03 02 04 03 05 04 06 05 07 06 08 07 09 08 10 09 11 10 12

| ISS | TDRS AVAIL | | |

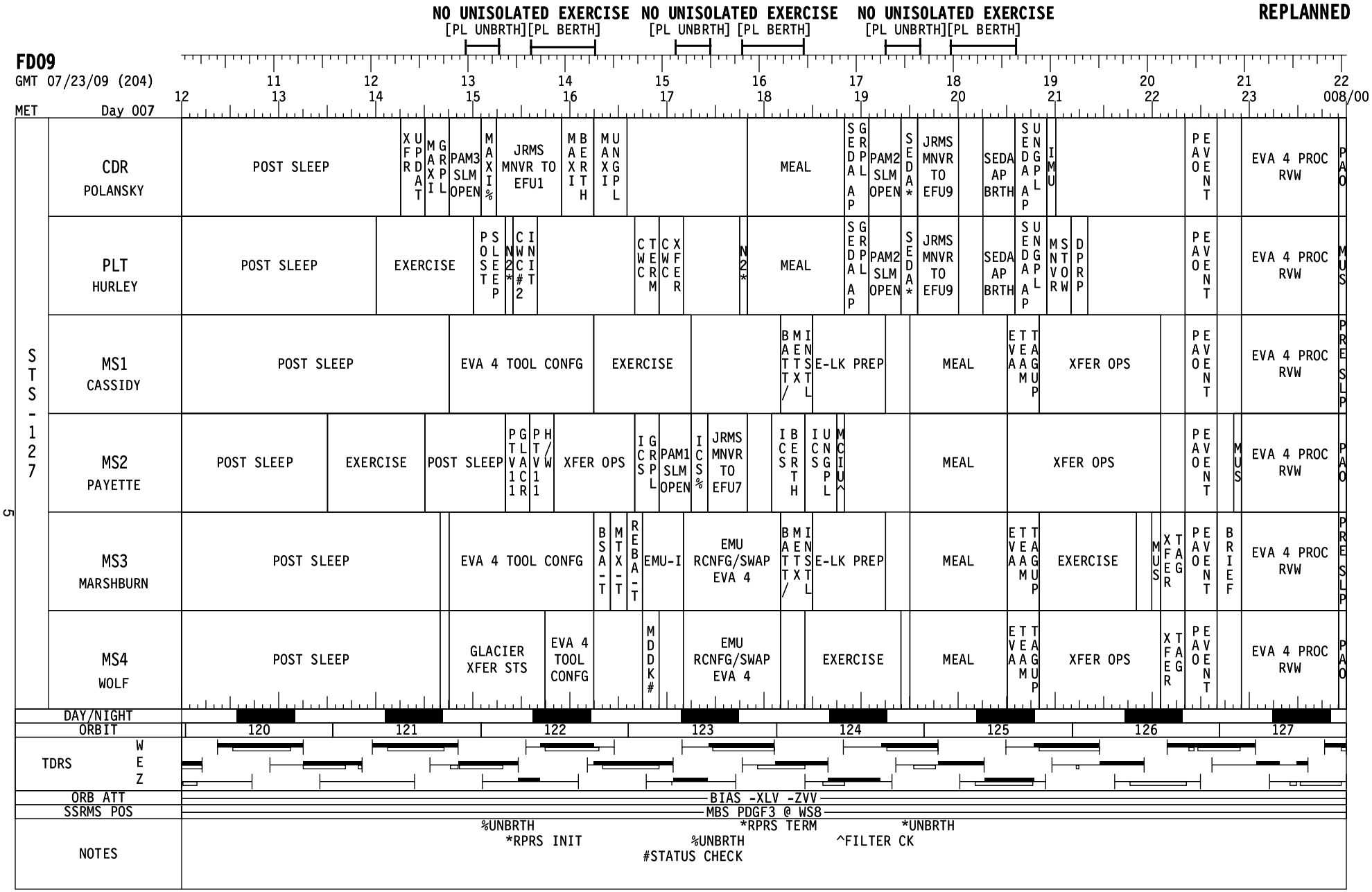
NO UNISOLATED EXERCISE [PL UNBRTH][PL BERTH]
NO UNISOLATED EXERCISE [PL UNBRTH] [PL BERTH]
NO UNISOLATED EXERCISE [PL UNBRTH][PL BERTH]
REPLANNED
FD09
GMT 07/23/09 (204)
MET Day 007
11 12 13 14 15 16 17 18 19 20 21 22
12 13 14 15 16 17 18 19 20 21 22 23 008/00
STS-127
CDR POLANSKY
POST SLEEP
XFR UPDAT
MAXI GRPL
PAM3 SLM OPEN
MAXI%
JRMS MNVR TO EFU1
MAXI BERTH
MAXI UNGPL
MEAL
SEDA AP GRPL
PAM2 SLM OPEN
SEDA*
JRMS MNVR TO EFU9
SEDA AP BRTH
SEDA AP UNGPL
IMU
PAO EVENT
EVA 4 PROC RVW
PAO
PLT HURLEY
POST SLEEP
EXERCISE
POST SLEEP
N2*
CWC#2 INIT
CWC TERM
CWC XFER
N2*
MEAL
SEDA AP GRPL
PAM2 SLM OPEN
SEDA*
JRMS MNVR TO EFU9
SEDA AP BRTH
SEDA AP UNGPL
MNVR STOW
DPRP
PAO EVENT
EVA 4 PROC RVW
MUS
MS1 CASSIDY
POST SLEEP
EVA 4 TOOL CONFG
EXERCISE
BATT/METX INSTL
E-LK PREP
MEAL
EVA TEAM TAGUP
XFER OPS
PAO EVENT
EVA 4 PROC RVW
PRESLP
MS2 PAYETTE
POST SLEEP
EXERCISE
POST SLEEP
PTV11 GLACR
PTV11 H/W
XFER OPS
ICS GRPL
PAM1 SLM OPEN
ICS%
JRMS MNVR TO EFU7
ICS BERTH
ICS UNGPL
MCIU^
MEAL
XFER OPS
PAO EVENT
MUS
EVA 4 PROC RVW
PAO
MS3 MARSHBURN
POST SLEEP
EVA 4 TOOL CONFG
BSA-T
MTX-T
REBA-T
EMU-I
EMU RCNFG/SWAP EVA 4
BATT/METX INSTL
E-LK PREP
MEAL
EVA TEAM TAGUP
EXERCISE
MUS
XFER TAG
PAO EVENT
BRIEF
EVA 4 PROC RVW
PRESLP
MS4 WOLF
POST SLEEP
GLACIER XFER STS
EVA 4 TOOL CONFG
MDDK#
EMU RCNFG/SWAP EVA 4
EXERCISE
MEAL
EVA TEAM TAGUP
XFER OPS
XFER TAG
PAO EVENT
EVA 4 PROC RVW
PAO
DAY/NIGHT
ORBIT
120 121 122 123 124 125 126 127
TDRS W E Z
ORB ATT
BIAS -XLV -ZVV
SSRMS POS
MBS PDGF3 @ WS8
NOTES
%UNBRTH
*RPRS INIT
%UNBRTH
#STATUS CHECK
*RPRS TERM
^FILTER CK
*UNBRTH

REPLANNED

FD09
GMT 07/23/09 (204)
MET Day 007

NO UNISOLATED EXERCISE [PL UNBRTH] [PL BERTH]
NO UNISOLATED EXERCISE [PL UNBRTH] [PL BERTH]
NO UNISOLATED EXERCISE [PL UNBRTH] [PL BERTH]

12 13 14 15 16 17 18 19 20 21 22 23 008/00

ISS TDRS AVAIL

DN	FE-2 WAKATA	POST SLEEP; PW; DPC; AREDC; EVAC; FNL ACT; MAXI; GRPL; PAM3 SLM OPEN; MAXI%; JRMS MNVR TO EFU1; MAXI; BERTH; MUNGPL; NUTR URN CLCT; URNINS; EXERCISE TVIS; MIDDAY-MEAL; NUTR URN CLCT; URNINS; HANDOVER; HAND OVER; NUTR URN CLCT; URNINS; EXERCISE ARED; EVA 4 PROC RVW; PW
EXP19	ISS CDR PADALKA	PS; PW; DPC; МБИ-21-CDR-EXE; EXERCISE TVIS; TVIS HYG; IMS EQUIP INV1; MIDDAY-MEAL; IMS-EQUIP-INV2; IMS; ИП-1; EXERCISE CEVIS; EVA 4 PROC RVW; PW
EXP19	FE-1 BARRATT	POST SLEEP; PW; DPC; D2XS; LCAD S/U; LOCD PREP; SWAB; DATA; SWAB; DATA; SWAB; DATA; EXERCISE TVIS; SWAB; DATA; LCTAD; STW; MIDDAY-MEAL; D2XS; EVA TOOL STOW; EXERCISE ARED; S/U; BISE; D2XS CAMR; EVA 4 PROC RVW; PW
UP	FE-2 EXP20 KOPRA	POST SLEEP; PW; DPC; EXERCISE CEVIS; GLACIER XFER ISS; AREDO; O/V; ICS; GRPL; PAM1 SLM OPEN; ICS%; JRMS MNVR TO EFU7; ICS; BERTH; ICS; UNGPL; MIDDAY-MEAL; HANDOVER; EVA; TEAM; TEAM UP; HAND OVER; VID SU; BISE SETUP; BISE OPS; EVA 4 PROC RVW
EXP20	FE-3 ROMANENKO	POST SLEEP; PW; DPC; СОЖ MNT; EXERCISE ARED; IMS EQUIP INV1; MIDDAY-MEAL; IMS-EQUIP-INV2; МБИ 16 FE3; EXERCISE TVIS; TVIS HYG; PW
EXP20	FE-4 THIRSK	POST SLEEP; PW; DPC; FSL; WHC-PT TANK-R&R; CWC; EXERCISE ARED; GSC; MIDDAY-MEAL; EXERCISE CEVIS; GSC; EVA 4 PROC RVW; PW
EXP20	FE-5 DE WINNE	RCS/U; RCCNFG; POST SLEEP; BLD INS; POST SLEEP; DPC; BLDSTW; PMC; REVCOAV2E; CIHNESCTKL; EXERCISE CEVIS; EXERCISE ARED; MIDDAY-MEAL; BLBRMV; CWCI; FILL 1; CWCI; FILL 2; BLBTST; HAMS/U; HAM; HAM; BLB TST; EVA 4 PROC RVW; EXDL

DAY/NIGHT

ORBIT: 120 | 121 | 122 | 123 | 124 | 125 | 126 | 127

SSRMS POS: MBS PDGF3 @ WS8

%UNBRTH %UNBRTH

NOTES

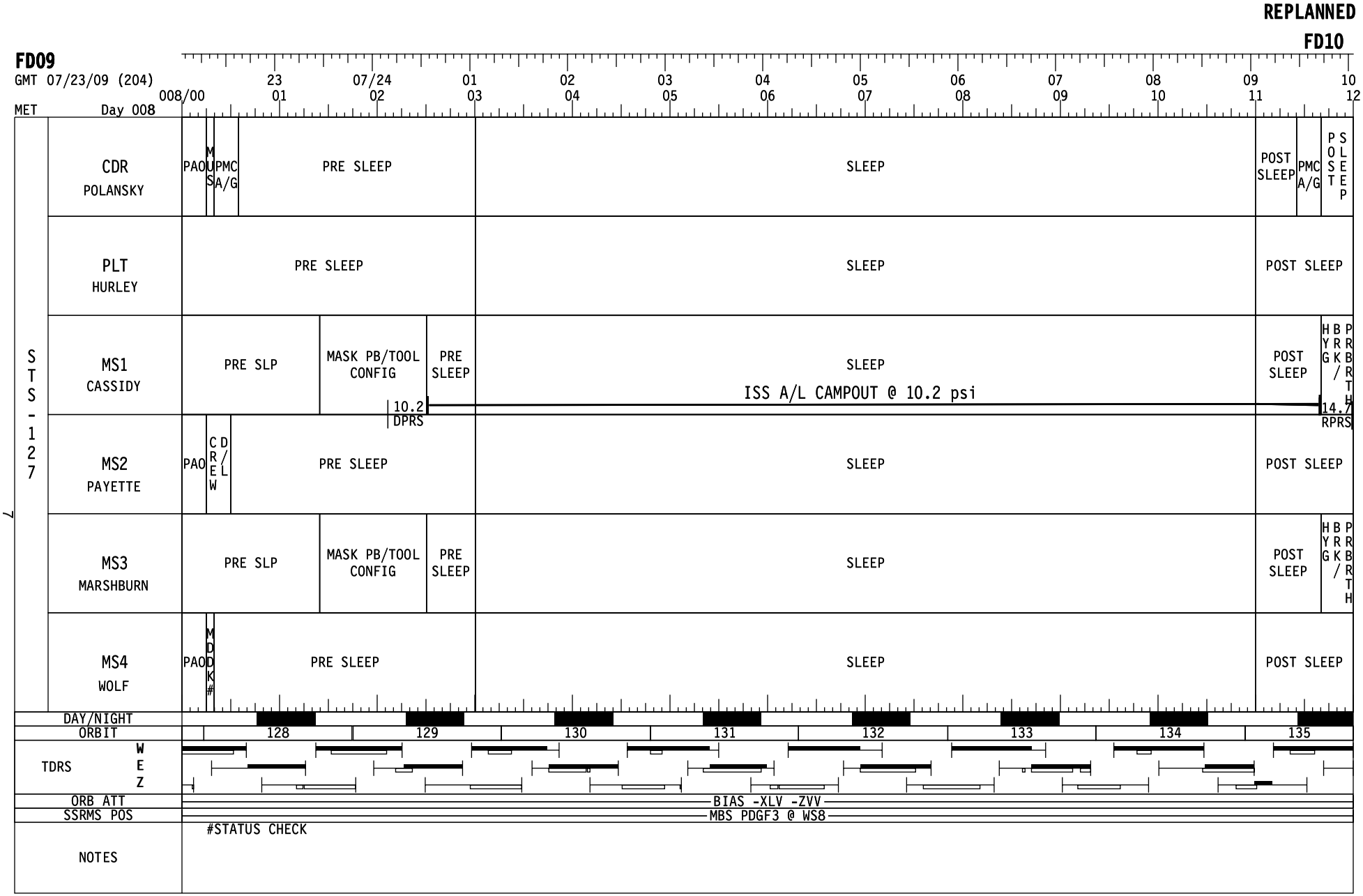
FD09
GMT 07/23/09 (204)
MET Day 008
008/00 23 01 07/24 02 01 03 02 04 03 05 04 06 05 07 06 08 07 09 08 10 09 11 10 12
STS-127
CDR POLANSKY
PAO
MUS
PMC A/G
PRE SLEEP
SLEEP
POST SLEEP
PMC A/G
POST SLEEP
PLT HURLEY
PRE SLEEP
SLEEP
POST SLEEP
MS1 CASSIDY
PRE SLP
MASK PB/TOOL CONFIG
PRE SLEEP
SLEEP
ISS A/L CAMPOUT @ 10.2 psi
10.2 DPRS
POST SLEEP
HYG BRK/ PRBRTH
14.7 RPRS
MS2 PAYETTE
PAO
CREW D/L
PRE SLEEP
SLEEP
POST SLEEP
MS3 MARSHBURN
PRE SLP
MASK PB/TOOL CONFIG
PRE SLEEP
SLEEP
POST SLEEP
HYG BRK/ PRBRTH
MS4 WOLF
PAO
MDDK#
PRE SLEEP
SLEEP
POST SLEEP
DAY/NIGHT
ORBIT
128
129
130
131
132
133
134
135
TDRS
W
E
Z
ORB ATT
BIAS -XLV -ZVV
SSRMS POS
MBS PDGF3 @ WS8
NOTES
#STATUS CHECK

REPLANNED

FD10

FD09

GMT 07/23/09 (204)

MET Day 008

ISS	TDRS AVAIL	008/00	23 01	07/24 02	01 03	02 04	03 05	04 06	05 07	06 08	07 09	08 10	09 11	10 12
DN	FE-2 WAKATA	PW	DPC	PRE SLEEP			SLEEP				NUTR URN CLCT	URN INS	POST SLEEP	
EXP 19	ISS CDR PADALKA	PW	DPC	PRE SLEEP			SLEEP				POST SLEEP			
EXP 19	FE-1 BARRATT	PW	DPC	PRE SLEEP			SLEEP				SALIV	SLEEP	POST SLEEP	
UP	FE-2 EXP20 KOPRA	PRE SLEEP	DPC	PRE SLEEP			SLEEP				SALIV	SLEEP	POST SLEEP	
EXP 20	FE-3 ROMANENKO	PW	DPC	PRE SLEEP			SLEEP				POST SLEEP			
EXP 20	FE-4 THIRSK	PW	DPC	PRE SLEEP			SLEEP				SALIV	SLEEP	POST SLEEP	
EXP 20	FE-5 DE WINNE	PW	DPC	PRE SLEEP			SLEEP				SALIV	SLEEP	POST SLEEP	♣

DAY/NIGHT

ORBIT: 128 | 129 | 130 | 131 | 132 | 133 | 134 | 135

SSRMS POS: MBS PDGF3 @ WS8

NOTES

♣URN CLCT

8

STS-127 FD (09)

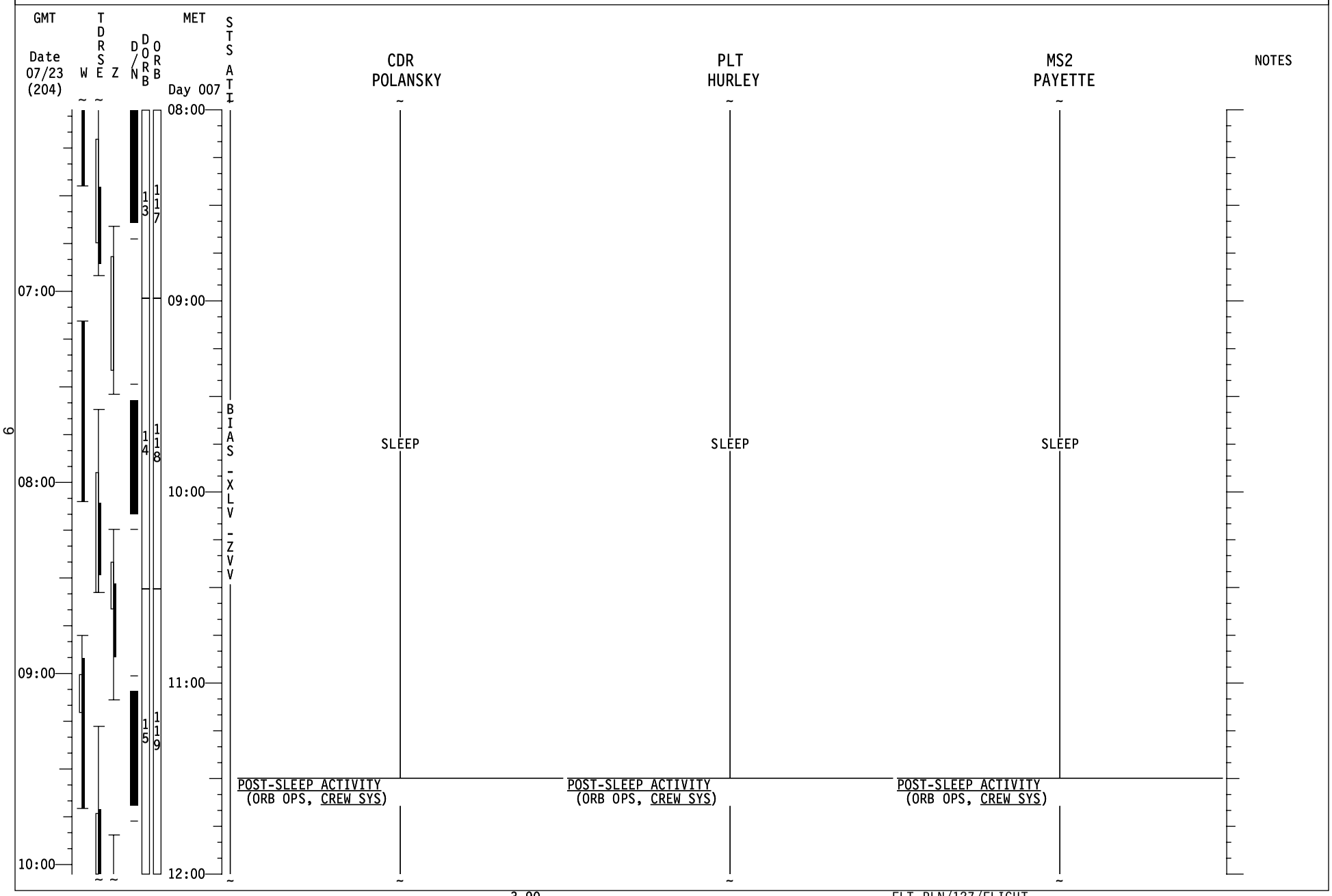
GMT
Date 07/23 (204)
W
TDRSE
Z
D/N
DORB
ORB
MET
Day 007
STS ATI
CDR POLANSKY
PLT HURLEY
MS2 PAYETTE
NOTES
07:00
08:00
09:00
10:00
08:00
09:00
10:00
11:00
12:00
13
14
15
117
118
119
BIAS-XLV-ZVV
SLEEP
SLEEP
SLEEP
POST-SLEEP ACTIVITY (ORB OPS, CREW SYS)
POST-SLEEP ACTIVITY (ORB OPS, CREW SYS)
POST-SLEEP ACTIVITY (ORB OPS, CREW SYS)

STS-127 FD (09)

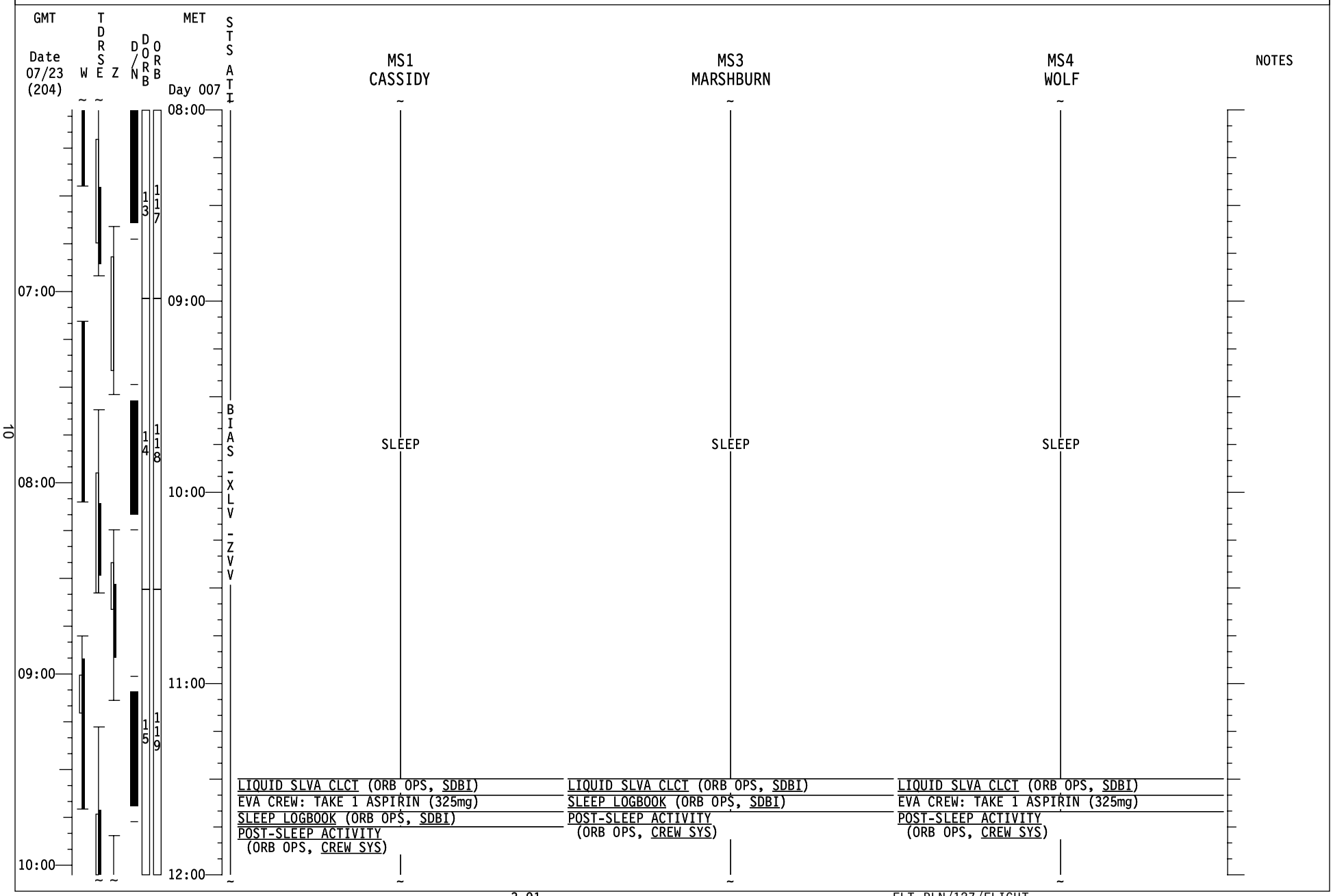
GMT
Date 07/23 (204)
W
TDRSE
Z
D/N
DORB 13 14 15
ORB 117 118 119
MET
Day 007
STS ATI
BIAS-XLV-ZVV
MS1 CASSIDY
MS3 MARSHBURN
MS4 WOLF
NOTES
07:00
08:00
09:00
10:00
08:00
09:00
10:00
11:00
12:00
SLEEP
SLEEP
SLEEP
LIQUID SLVA CLCT (ORB OPS, SDBI)
EVA CREW: TAKE 1 ASPIRIN (325mg)
SLEEP LOGBOOK (ORB OPS, SDBI)
POST-SLEEP ACTIVITY (ORB OPS, CREW SYS)
LIQUID SLVA CLCT (ORB OPS, SDBI)
SLEEP LOGBOOK (ORB OPS, SDBI)
POST-SLEEP ACTIVITY (ORB OPS, CREW SYS)
LIQUID SLVA CLCT (ORB OPS, SDBI)
EVA CREW: TAKE 1 ASPIRIN (325mg)
POST-SLEEP ACTIVITY (ORB OPS, CREW SYS)

REPLANNED

STS-127 FD (09)

GMT Date 07/23 (204) | W | TDRSE | Z | D/N | DORB | ORB | MET Day 007 | STS ATT

12:00 13:00 14:00 15:00 16:00

11:00 12:00 13:00 14:00

16 120 121 122

BIAS-XLV-ZVV

CDR POLANSKY

POST-SLEEP ACTIVITY (ORB OPS, CREW SYS)

DAILY TRANSFER LIST UPDATE
Ref. Transfer List & MSG 069

J-ROBO: 1.104 JEMRMS OPS FOR MAXI XFER FROM PAM3 TO EFU1 Steps 1-4.4

J-S&M: 1.305 PAM OPS FOR PL RELEASE-SLT
Steps 2-3.1,4-5 for PAM3, Select Sw6 at Step 3.1 for PAM3
EXERCISE CONSTRAINT

J-ROBO: 1.104 JEMRMS OPS FOR MAXI XFER FROM PAM3 TO EFU1 Steps 4.5-5.3 EXERCISE CONSTRAINT

J-ROBO: 1.104 JEMRMS OPS FOR MAXI XFER FROM PAM3 TO EFU1 Steps 6-8
EXERCISE CONSTRAINT

J-A&C: 1.306 EFU OPS FOR PL BERTHING-SLT
Steps 8-11 for EFU1 MAXI Berthing using EDU a
EXERCISE CONSTRAINT

PLT HURLEY

POST-SLEEP ACTIVITY (ORB OPS, CREW SYS)

EXERCISE

POST-SLEEP ACTIVITY (ORB OPS, CREW SYS)

N2 REPRESS USING PAYLOAD N2 VLVS [A]
SHUTTLE/ISS H2O CNTR FILL (ORB OPS, ECLS)
Init Fill #2, Ref. MSG 057

MS2 PAYETTE

POST-SLEEP ACTIVITY (ORB OPS, CREW SYS)

EXERCISE

POST-SLEEP ACTIVITY (ORB OPS, CREW SYS)

P/TV11 GLACIER (PHOTO/TV, SCENES) OPS

P/TV11 GLACIER (PHOTO/TV, SCENES) OPS

TRANSFER OPS
Ref. Transfer List & MSG 069

NOTES

NO UNISOL EXERCISE [MAXI UBRTH]

NO UNISOL EXERCISE [MAXI BERTH]

FD09 EZ ACTIVITES:
TEPC (ORB OPS, CREW SYS)
CHECK STATUS
√OCAC FILTER & MDDK DUCT SCREEN
HARD REBOOT ALL PGSCs EXCEPT:
STS-7(WLES),STS-6(RPOP2),
& OCA ROUTER.

[A] N2 REPRESS USING PAYLOAD N2 VLVS (ORB OPS, ECLS) Steps 3-7

11

STS-127 FD (09)

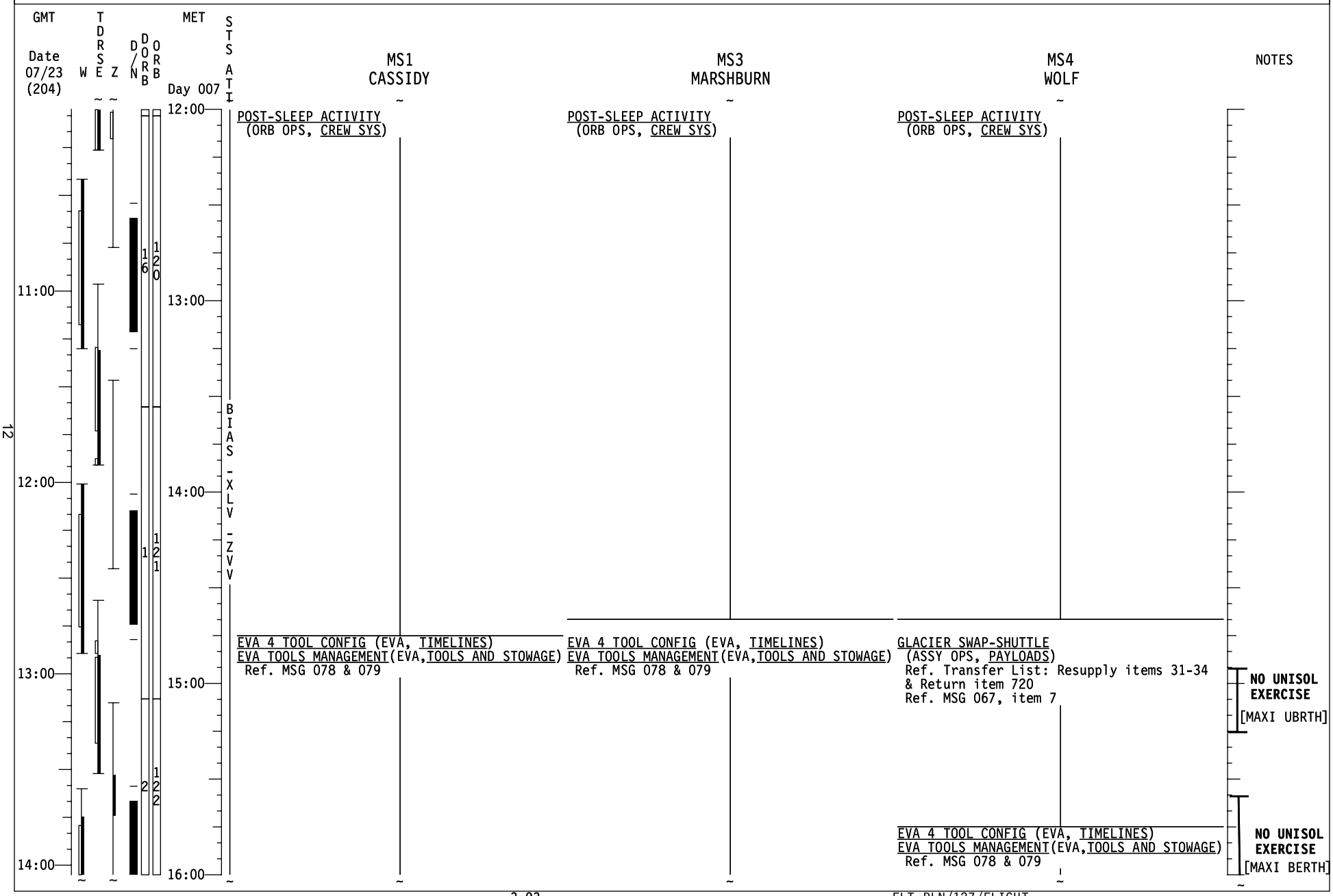
GMT
Date 07/23 (204)
W
TDRSE
Z
D/N
DORB
ORB
MET
Day 007
STS ATT
MS1 CASSIDY
MS3 MARSHBURN
MS4 WOLF
NOTES
11:00
12:00
13:00
14:00
12:00
13:00
14:00
15:00
16:00
16
120
121
122
BIAS - XLV - ZVV
POST-SLEEP ACTIVITY (ORB OPS, CREW SYS)
POST-SLEEP ACTIVITY (ORB OPS, CREW SYS)
POST-SLEEP ACTIVITY (ORB OPS, CREW SYS)
EVA 4 TOOL CONFIG (EVA, TIMELINES)
EVA TOOLS MANAGEMENT(EVA,TOOLS AND STOWAGE)
Ref. MSG 078 & 079
EVA 4 TOOL CONFIG (EVA, TIMELINES)
EVA TOOLS MANAGEMENT(EVA,TOOLS AND STOWAGE)
Ref. MSG 078 & 079
GLACIER SWAP-SHUTTLE (ASSY OPS, PAYLOADS)
Ref. Transfer List: Resupply items 31-34 & Return item 720
Ref. MSG 067, item 7
NO UNISOL EXERCISE
[MAXI UBRTH]
EVA 4 TOOL CONFIG (EVA, TIMELINES)
EVA TOOLS MANAGEMENT(EVA,TOOLS AND STOWAGE)
Ref. MSG 078 & 079
NO UNISOL EXERCISE
[MAXI BERTH]

STS-127 FD (09)

GMT Date 07/23 (204) | W | TDRSE | Z | D/N | DORB | ORB | MET Day 007 | STS ATT

16:00 17:00 18:00 19:00 20:00

15:00 16:00 17:00 18:00

2 | 1 2 2 | 3 | 1 2 3 | 4 | 1 2 4 | 5 | 1 2 5

BIAS - XLV - ZVV

CDR POLANSKY

J-A&C: 1.306 EFU OPS FOR PL BERTHING-SLT
Steps 8-11 for MAXI Berthing

EXERCISE CONSTRAINT

J-ROBO: 1.104 JEMRMS OPS FOR MAXI
XFER FROM PAM3 TO EFU1 Step 9

C N2 REPRESS USING PAYLOAD N2 VLVS
(ORB OPS, ECLS) Steps 8-12

MEAL

J-ROBO: 1.103 JEMRMS OPS FOR SEDA-AP
XFER FROM PAM2 TO EFU9 Steps 1-4.4

J-S&M: 1.305 PAM OPS FOR PL RELEASE-SLT
Steps 2,3.1 & 4.2-5 for PAM2
Select Sw5 at Step 3.1
EXERCISE CONSTRAINT

J-ROBO: 1.103 JEMRMS OPS FOR SEDA-AP XFER
FROM PAM2 TO EFU9 Steps 4.5-5.3 EXER CNSTRNT

J-ROBO: 1.103 JEMRMS OPS FOR SEDA-AP
XFER FROM PAM2 TO EFU9 Steps 6.1-6.4 &7

EXERCISE CONSTRAINT

PLT HURLEY

SHUTTLE/ISS H2O CNTR FILL
(ORB OPS, ECLS) FILL TERM

CWC TRANSFER
Transfer 1 CWC to ISS

B Steps 4.5-5.3 for EFU 7 ICS-EF
Berthing using EDU a

N2 REPRESS USING PAYLOAD N2 VLVS C

MEAL

J-ROBO: 1.103 JEMRMS OPS FOR SEDA-AP
XFER FROM PAM2 TO EFU9 Steps 1-4.4

J-S&M: 1.305 PAM OPS FOR PL RELEASE-SLT
Steps 2,3.1 & 4.2-5 for PAM2
Select Sw5 at Step 3.1
EXERCISE CONSTRAINT

J-ROBO: 1.103 JEMRMS OPS FOR SEDA-AP XFER
FROM PAM2 TO EFU9 Steps 4.5-5.3 EXER CNSTRNT

J-ROBO: 1.103 JEMRMS OPS FOR SEDA-AP
XFER FROM PAM2 TO EFU9 Steps 6.1-6.4 &7

EXERCISE CONSTRAINT

MS2 PAYETTE

TRANSFER OPS
Ref. Transfer List & MSG 069

J-ROBO: 1.102 JEMRMS OPS FOR ICS-EF
XFER FROM PAM1 TO EFU7 Steps 1-4.4

J-S&M: 1.305 PAM OPS FOR PL RELASE-SLT
Steps 2,3 & 4.2-5 for PAM1, Select Sw4
at Step 3.1 & Sw10 at Step 3.2 for PAM1
EXERCISE CONSTRAINT

J-ROBO: 1.102 JEMRMS OPS FOR ICS-EF
XFER FROM PAM1 TO EFU7 B EXER CONST

J-ROBO: 1.102 JEMRMS OPS FOR ICS-EF
XFER FROM PAM1 TO EFU7 Steps 6-8

EXERCISE CONSTRAINT

J-S&M: 1.306 EFU OPS FOR PL BERTHING-SLT
Steps 8-11 for ICS-EF BERTHING

EXERCISE CONSTRAINT

J-ROBO: 1.102 JEMRMS OPS FOR ICS-EF
XFER FROM PAM1 TO EFU7 Step 9

L17 Check MCIU filter screen

MEAL

NOTES

NO UNISOL EXERCISE [MAXI BERTH]

NO UNISOL EXERCISE [ICS UBRTH]

NO UNISOL EXERCISE [ICS BERTH]

NO UNISOL EXERCISE [SEDA UBRTH]

NO UNISOL EXERCISE [SEDA BERTH]

STS-127 FD (09)

GMT Date 07/23 (204) | W | TDRS E | Z | D/N | DORB | ORB | MET Day 007 | STS ATT

MS1 CASSIDY | MS3 MARSHBURN | MS4 WOLF | NOTES

16:00

EVA 4 TOOL CONFIG (EVA, TIMELINES)
EVA TOOLS MANAGEMENT(EVA,TOOLS AND STOWAGE)
Ref. MSG 078 & 079

EVA 4 TOOL CONFIG (EVA, TIMELINES)
EVA TOOLS MANAGEMENT(EVA,TOOLS AND STOWAGE)
Ref. MSG 078 & 079

EVA 4 TOOL CONFIG (EVA, TIMELINES)
EVA TOOLS MANAGEMENT(EVA,TOOLS AND STOWAGE)
Ref. MSG 078 & 079

NO UNISOL EXERCISE [MAXI BERTH]

EVA SYS: 1.605 BSA BATTERY RECHARGE TERM
Ref. MSG 075

EVA SYS: 1.510 METOX REGENERATION TERM

EVA SYS:1.635 REBA RCHRG FROM PSA UTILITY OUTLET TERM

EVA SYS:1.625 EMU BATT RCHRG FROM PSA UTILITY OUTLET INIT
Ref: 127 EMU CTCC
Ref: 127 BATTERY RECHRG PLAN CC

MDDK STATUS CHECK (ASSY OPS, P/L) Step 1

EXERCISE

17:00

EMU RECONFIG/SWAP FOR EVA 4
(EVA, AIRLOCK CONFIG)
Ref. MSG 075 & 077

EMU RECONFIG/SWAP FOR EVA 4
(EVA, AIRLOCK CONFIG)
Ref. MSG 075 & 077

NO UNISOL EXERCISE [ICS UBRTH]

BIAS-XLV-ZVV

18:00

EVA SYS: 1.515 EMU METOX/LIOH/BATTERY REPLACEMENT
Stow used LiOH from EMU 3018 in EVA Sys xfer bags. Leave used LiOH in EMU 3003
Ref: 127 EMU CTCC

EVA SYS: 1.515 EMU METOX/LIOH/BATTERY REPLACEMENT
Stow used LiOH from EMU 3018 in EVA Sys xfer bags. Leave used LiOH in EMU 3003
Ref: 127 EMU CTCC

NO UNISOL EXERCISE [ICS BERTH]

EVA SYS: 1.305 EQUIPMENT LK PREP
Steps 1-3 not req'd, In Step 27,
Use Vacuum Manometer s/n 05
Ref: 127 EMU CTCC

EVA SYS: 1.305 EQUIPMENT LK PREP
Steps 1-3 not req'd, In Step 27,
use Vacuum Manometer s/n 05
Ref: 127 EMU CTCC

EXERCISE

19:00

NO UNISOL EXERCISE [SEDA UBRTH]

MEAL | MEAL | MEAL

NO UNISOL EXERCISE [SEDA BERTH]

20:00

STS-127 FD (09)

GMT Date 07/23 (204) | W | TDRS E | Z | D/N | DORB | ORB | MET Day 007 | STS ATI

CDR POLANSKY | PLT HURLEY | MS2 PAYETTE | NOTES

20:00

J-A&C: 1.306 EFU OPS FOR PL BERTHING-SLT
Steps 8-11 for EFU9 SEDA-AP Berthing using EDU b
EXERCISE CONSTRAINT

J-A&C: 1.306 EFU OPS FOR PL BERTHING-SLT
Steps 8-11 for EFU9 SEDA-AP Berthing using EDU b
EXERCISE CONSTRAINT

MEAL

NO UNISOL EXERCISE
[SEDA BERTHING]

J-ROBO: 1.103 JEMRMS OPS FOR SEDA-AP XFER FROM PAM2 TO EFU9 Step 8

J-ROBO: 1.103 JEMRMS OPS FOR SEDA-AP XFER FROM PAM2 TO EFU9 Step 8

TRANSFER OPS
Ref. Transfer List & MSG 069

19:00 — 21:00

IMU STAR OF OPPTY ALIGN (ORB OPS, GNC)

J-ROBO: 1.105 JEMRMS MNVR TO STOWED POSITION AFTER SEDA-AP XFER TO EFU9 [D]

J-SODF: 1.109 JEMRMS DEACTIVATION PREP
Steps 1-6

[D] After completion of JEMRMS maneuver,
Configure EXT F camera for ICS-EF Antenna Deploy.
EXT F (+20, -25; Z: 1.5)
Configure ELBOW camera for PAM Close operation by SSIPC
ELBOW (+15, +13; Z: 2)

20:00 — 22:00

PUBLIC AFFAIRS EVENT
ISS KU AVAIL: 22:10-22:48
Ref. MSG 071

PUBLIC AFFAIRS EVENT
ISS KU AVAIL: 22:10-22:48
Ref. MSG 071

PUBLIC AFFAIRS EVENT
ISS KU AVAIL: 22:10-22:48
Ref. MSG 071

21:00 — 23:00

EVA 4 PROCEDURE REVIEW
Ref: 127 EVA 4 BRIEFING CARD
(EVA, TIMELINES)

EVA 4 PROCEDURE REVIEW
Ref: 127 EVA 4 BRIEFING CARD
(EVA, TIMELINES)

LOW BACK PAIN QUEST (ASSY OPS, PAYLOADS)
EVA 4 PROCEDURE REVIEW
Ref: 127 EVA 4 BRIEFING CARD
(EVA, TIMELINES)

22:00 — 00:00

PUBLIC AFFAIRS EVENT
ISS KU AVAIL: 23:48-00:16
Ref. MSG 072

LOW BACK PAIN QUEST (ASSY OPS, PAYLOADS)

PUBLIC AFFAIRS EVENT
ISS KU AVAIL: 23:48-00:16
Ref. MSG 072

STS-127 FD (09)

GMT Date 07/23 (204) | W | TDRS E | Z | D/N | DORB 5 6 7 | ORB 125 126 127 | MET Day 007 | STS ATT BIAS -XLV -ZVV

MET	MS1 CASSIDY	MS3 MARSHBURN	MS4 WOLF	NOTES
20:00	MEAL	MEAL	MEAL	NO UNISOL EXERCISE [SEDA BERTH]
	EVA TEAM TAGUP ISS KU AVAIL: 20:37-21:10	EVA TEAM TAGUP ISS KU AVAIL: 20:37-21:10	EVA TEAM TAGUP ISS KU AVAIL: 20:37-21:10	
19:00 / 21:00	TRANSFER OPS Ref. Transfer List & MSG 069		TRANSFER OPS Ref. Transfer List & MSG 069	
		EXERCISE		
20:00 / 22:00		LOW BACK PAIN QUEST (ASSY OPS, PAYLOADS) TRANSFER TAGUP Coordinate with xfer counterpart	TRANSFER TAGUP Coordinate with xfer counterpart	
	PUBLIC AFFAIRS EVENT ISS KU AVAIL: 22:10-22:48 Ref. MSG 071	PUBLIC AFFAIRS EVENT ISS KU AVAIL: 22:10-22:48 Ref. MSG 071	PUBLIC AFFAIRS EVENT ISS KU AVAIL: 22:10-22:48 Ref. MSG 071	
		TRANSFER BRIEF Call down status to MCC		
21:00 / 23:00	EVA 4 PROCEDURE REVIEW Ref: 127 EVA 4 BRIEFING CARD (EVA, TIMELINES)	EVA 4 PROCEDURE REVIEW Ref: 127 EVA 4 BRIEFING CARD (EVA, TIMELINES)	EVA 4 PROCEDURE REVIEW Ref: 127 EVA 4 BRIEFING CARD (EVA, TIMELINES)	
22:00 / 00:00	PRE-SLEEP ACTIVITY (ORB OPS, CREW SYS)	PRE-SLEEP ACTIVITY (ORB OPS, CREW SYS)	PUBLIC AFFAIRS EVENT ISS KU AVAIL: 23:48-00:16 Ref. MSG 072	

STS-127 FD (09)

GMT Date 07/23 (204) | W | TDRSE | Z | D/N | DORB | ORB | MET Day 008 | STS ATT

GMT	MET	CDR POLANSKY	PLT HURLEY	MS2 PAYETTE	NOTES
23:00	00:00	PUBLIC AFFAIRS EVENT ISS KU AVAIL: 23:48-00:16 Ref. MSG 072	PRE-SLEEP ACTIVITY (ORB OPS, CREW SYS)	PUBLIC AFFAIRS EVENT ISS KU AVAIL: 23:48-00:16 Ref. MSG 072	
		LOW BACK PAIN QUEST (ASSY OPS, PAYLOADS)		CREW DOWNLINK KU TDRW (23:57-00:31) Ref. MSG 067, item 6	
		PRIVATE MEDICAL CONFERENCE L9 PAYLOAD STATION A/G(two) -OFF Perform via A/G 2		PRE-SLEEP ACTIVITY (ORB OPS, CREW SYS)	
		PRE-SLEEP ACTIVITY (ORB OPS, CREW SYS)			
00:00	01:00				
	02:00				
01:00	03:00		CREW WAKE 8/11:00		
		SLEEP	SLEEP	SLEEP	
02:00	04:00				

Day 008: 7, 8, 9, 10; 127, 128, 129, 130

STS ATT: BIAS -XLV -ZVV

STS-127 FD (09)

GMT Date 07/23 (204) | W | TDRS E | Z | D/N | DORB 7 8 9 10 | ORB 127 128 129 130 | MET Day 008 | STS ATT BIAS -XLV -ZVV

MET	MS1 CASSIDY	MS3 MARSHBURN	MS4 WOLF	NOTES
00:00	PRE-SLEEP ACTIVITY (ORB OPS, CREW SYS)	PRE-SLEEP ACTIVITY (ORB OPS, CREW SYS)	PUBLIC AFFAIRS EVENT ISS KU AVAIL: 23:48-00:16 Ref. MSG 072 MDDK STATUS CHECK (ASSY OPS, P/L) Step 1 PRE-SLEEP ACTIVITY (ORB OPS, CREW SYS)	
01:00				
02:00	EVA SYS: 1.206 10.2 PSIA CAMPOUT MASK PREBREATHE Ref: 127 EVA 4 TOOL CONFIG (EVA, TIMELINES) Ref: 127 EMU CTCC	EVA SYS: 1.206 10.2 PSIA CAMPOUT MASK PREBREATHE Ref: 127 EVA 4 TOOL CONFIG (EVA, TIMELINES) Ref: 127 EMU CTCC		
03:00	PRE-SLEEP ACTIVITY (ORB OPS, CREW SYS)	PRE-SLEEP ACTIVITY (ORB OPS, CREW SYS) **CREW WAKE 8/11:00**		
04:00	SLEEP	SLEEP	SLEEP	

MSG 068 - FD09 MISSION SUMMARY

Good Morning Endeavour!!!

Thanks for another great day!

Actually, thanks for your stellar performance for the entire “first half” of the flight! It is now time to take a deep breath and get ready to charge into the second half!

Have a great day!!!!

YOUR CURRENT ORBIT IS: 188 X 186 NM

NOTAMS:

NOTAMS – ONE CHANGE

EDW - EDW IN USE. EDT ELS DAY / VFR ONLY.
EDW - LAKEBED RWY 15/33 - GREEN. RWY 18L - UNUSABLE.
NOR - LAKEBED RUNWAYS GREEN.
FMH - RWY 05/23 CLOSED.
ILM - CLOSED.
GUA - RWY 24R END LIGHTS OTS.
GUA - RWY 06R/24L CLOSED.
KBO - RWY 14L/32R CLOSED.
INN - CLOSED.
IKF - NOT USABLE. NO AGREEMENT.
BEN - NOT RECOMMENDED/NOT SUPPORTED.
AMB - CLOSED.

NEXT 2 PLS OPPORTUNITIES:

EDW22 ORB 126 – 7/22:01 SCT150 BKN250 7 220/15P20 (ORB 127: **220/19P27**)
EDW22 ORB 142 – 8/22:26 SCT150 SCT300 7 **220/19P27**

OMS TANK FAIL CAPABILITY:

L OMS FAILS: NO
R OMS FAILS: NO

LEAKING OMS PRPLT BURN:

L OMS LEAK: ALWAYS BURN RETROGRADE
R OMS LEAK: ALWAYS BURN RETROGRADE

OMS QUANTITIES(%)

Subtract interconnect counter for current OMS quantities.

L OMS OX = 39.5 R OMS OX = 39.7
FU = 39.1 FU = 39.4

END OF PAGE 1 OF 2, MSG 068

MSG 068 - FD09 MISSION SUMMARY

DELTA V AVAILABLE:

OMS	398 FPS
ARCS (TOTAL ABOVE QTY1)	43 FPS
TOTAL IN THE AFT	441 FPS
ARCS (TOTAL ABOVE QTY2)	74 FPS
FRCS (ABOVE QTY 1)	28 FPS
AFT QTY 1	81 %
AFT QTY 2	43 %

SYSTEM #	FAILURE	IMPACT	WORK AROUND
OCA	The OCA Router hard drive failed.	There was a loss of STS-OCA capability.	During the failure ISS OCA assets were utilized. The crew was directed to run A31p HARD DRIVE CHANGEOUT (ORB OPS, PGSC) to resolve the STS Router issue.

END OF PAGE 2 OF 2, MSG 068

Tom, Dave, and Mark,

Welcome to another day of transfer after a few days of busy EVA ops. You're now approaching the home stretch, with not too many items remaining.

Transfer Notes

- **CSA-CP Return Location** – Due to mass constraints of the 5 MLE bag stacks, we need to return the CSA-CPs (Return Items 402.1 - 402.3) in an alternate location. We have deleted them from bag 402 on your return transfer list and added them as new items 905, 906, and 907 which will be stowed in bag 704 at MF71O.

- **EVA Comm Caps** – Since EVA would like to leave Wakata's prime comm cap on ISS, we have unmarked item 605.4 on your Return list and updated the final location.

- **Completed Items** – We understand that you've most likely completed more items at this point than we have reflected as complete in your transfer list, partly due to timelined activities. We have not marked these complete, instead waiting until we got positive confirmation from you during tonight's transfer brief.

- **5 MLE Bag Layouts** – MMACS and Alaurna have uplinked the 5 MLE bag return layouts in today's Execute Package (MSG 073). Feel free to add these to the Layouts tab in your Transfer Book.

The Transfer List Excel file, FD09_Transfer_List_STS127.xls, locations are:

- Shuttle: **C:\OCA-up\transfer** (KFX machine)
- Station: **K:\OCA-up\transfer**

FD09 Transfer Choreography (items that should be completed today)

- Resupply Items 31 thru 34.
- Return Item 720.

Please update Transfer List book as follows:

In the **LAYOUTS** tab:
Replace the following page:
Layouts-2

In the **RESUPPLY** tab:
Pen & Ink on page Resupply-11:
Item 46.1.1 – strike through entire line; item has been deleted since all sample bags have been used

In the **RETURN** tab:
Pen & Ink on page Return-13:
Items 721 & 722 – update initial location as follows:
WAS: NOD1S4_D2
IS: LAB1O3

Pen & Ink on page Return-14:
Item 725 – update notes as follows:
WAS: Stow packets in food trays after the FD06 EHS-SM WATER-CLCT activity.
IS: Stow packets in food trays after the FD**08** EHS-SM WATER-CLCT activity.

Replace the following pages:
Return-1, 6, 10, and 15

Add the following page:
Return-16

Have a great day!

- The 2J/A Transfer Team

MD CEIL STBD 2 – BAG H

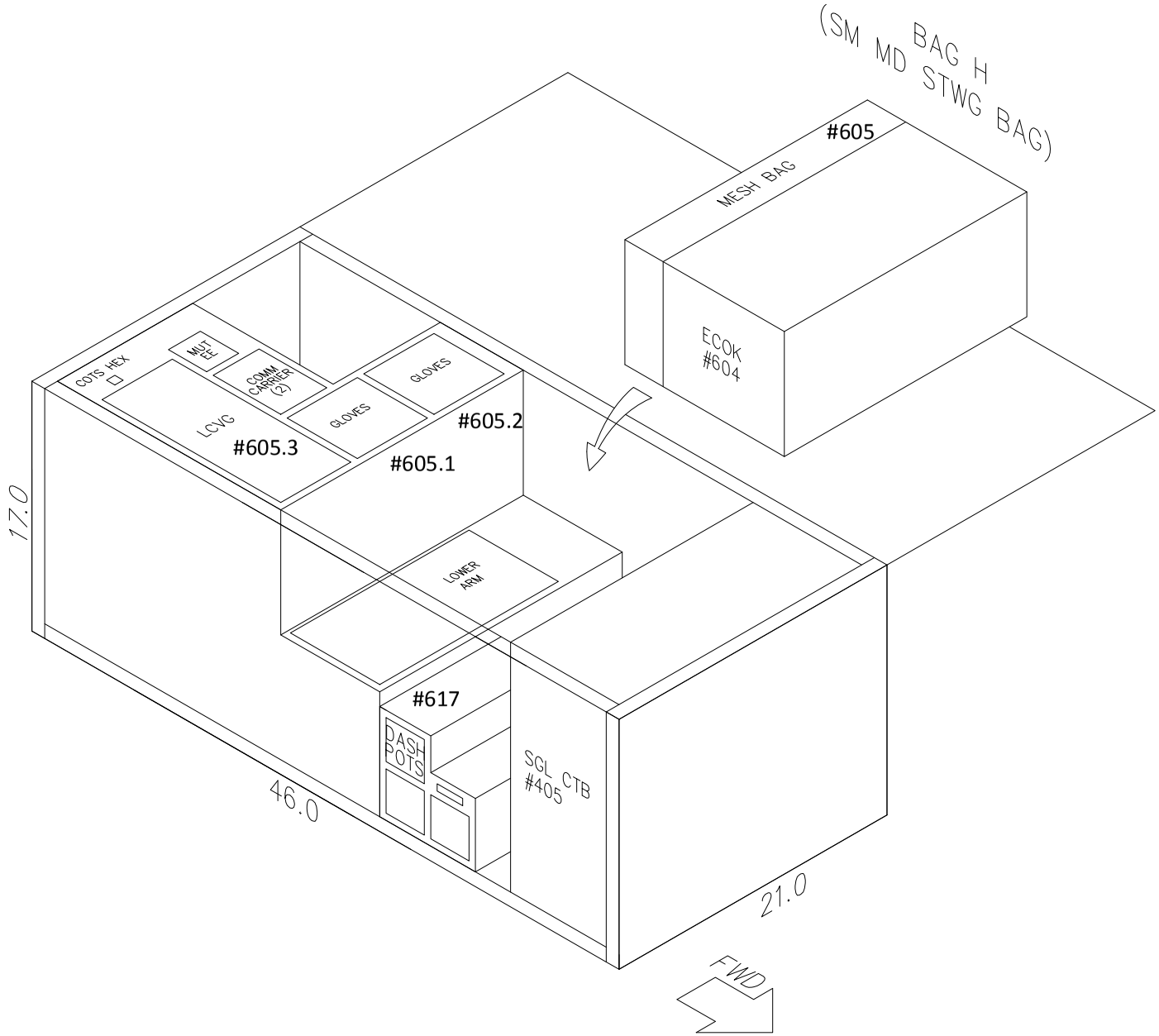

EXT A/L FLOOR – BAG F

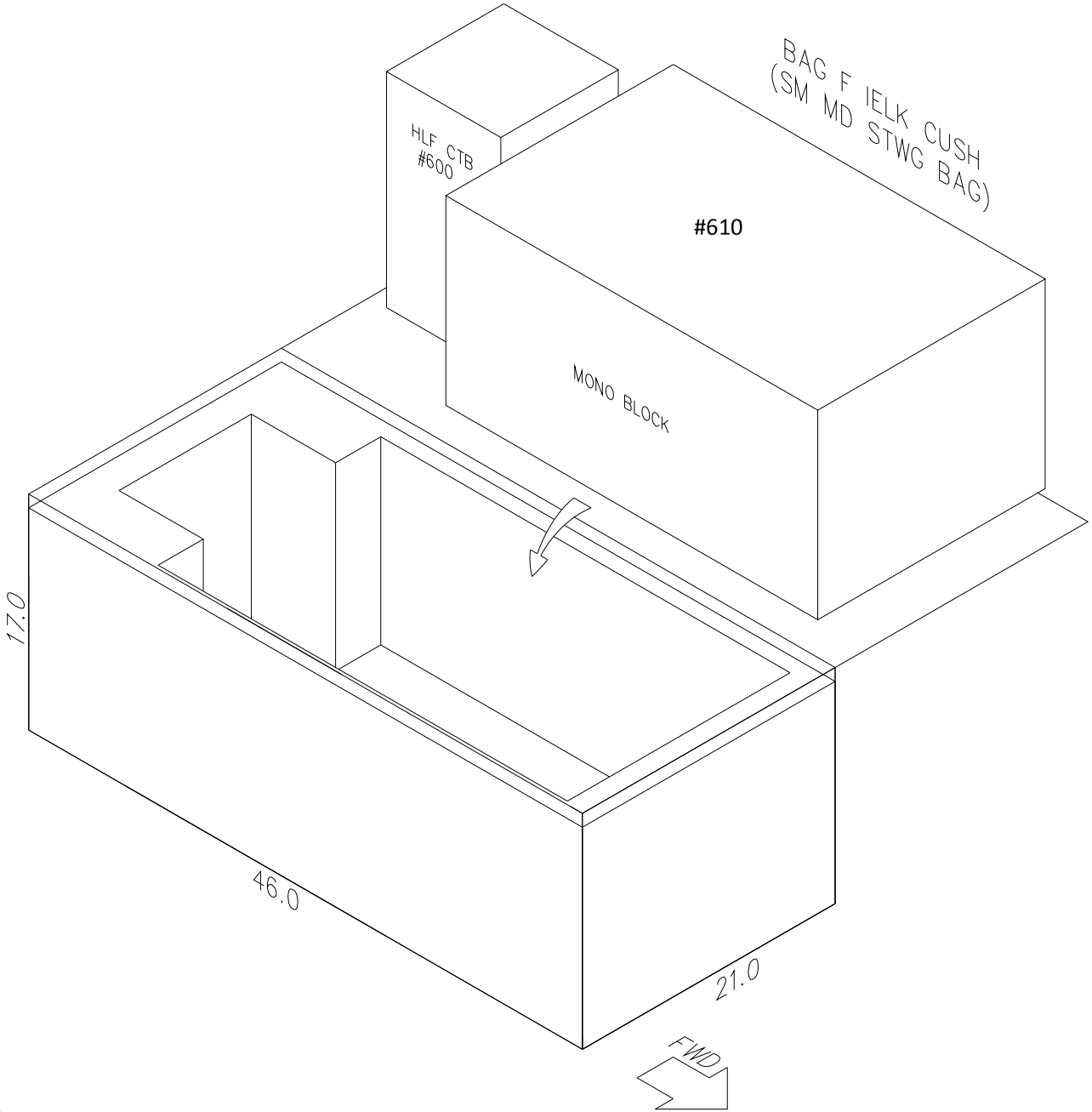

MD FLOOR PORT 1 – BAG B

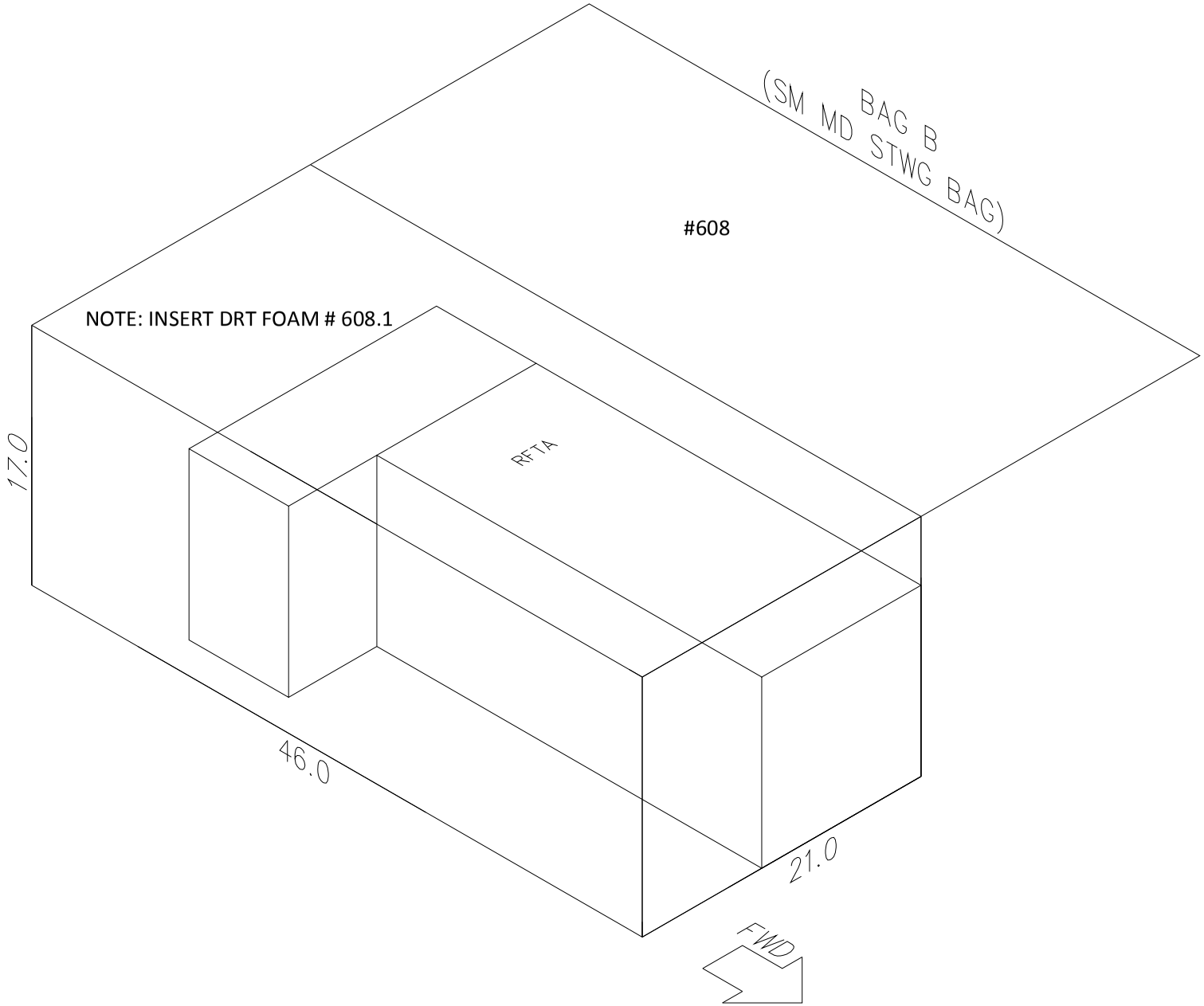

MD FLOOR PORT 2 – BAG I

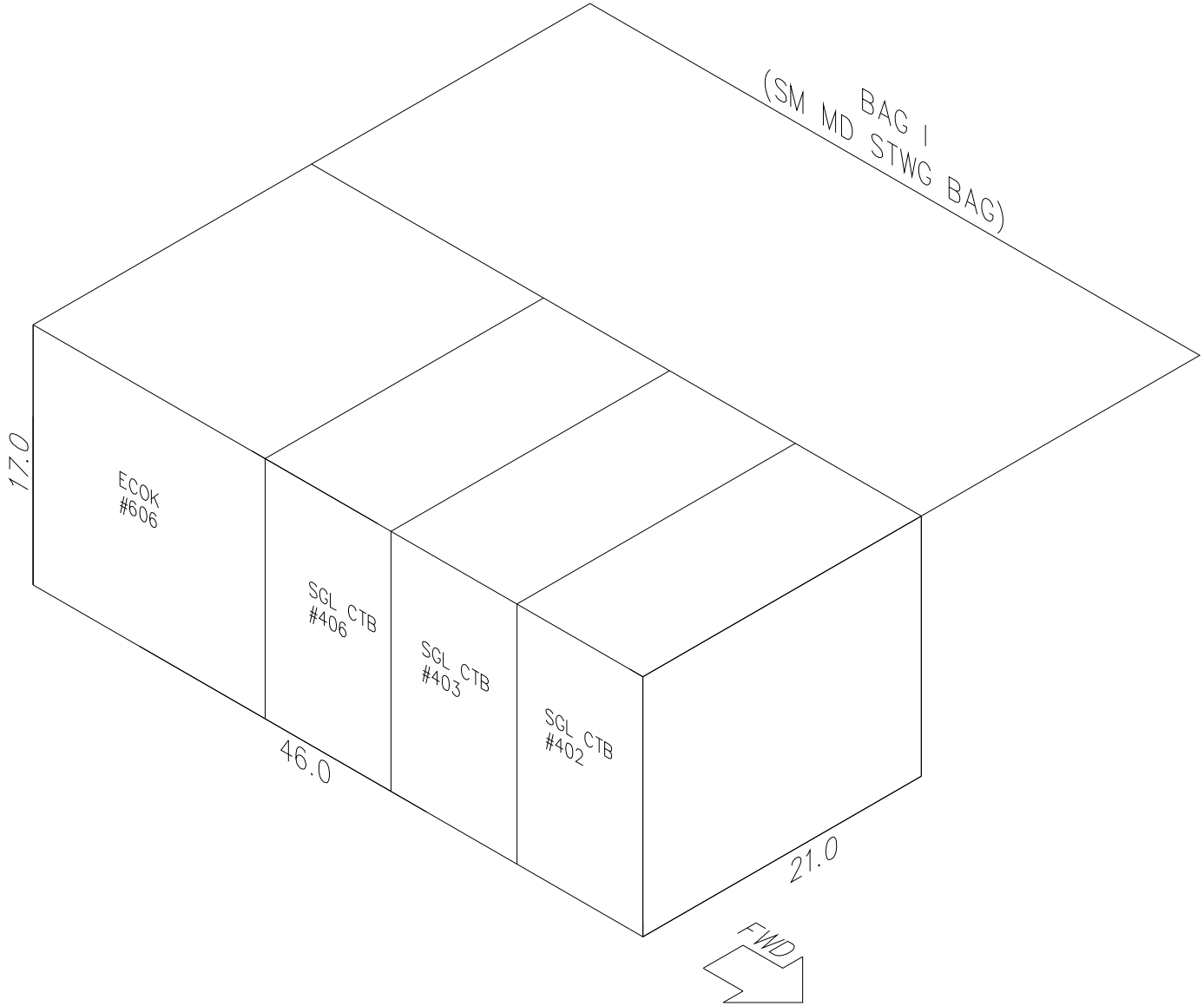

MD FLOOR STDB 2 – BAG C

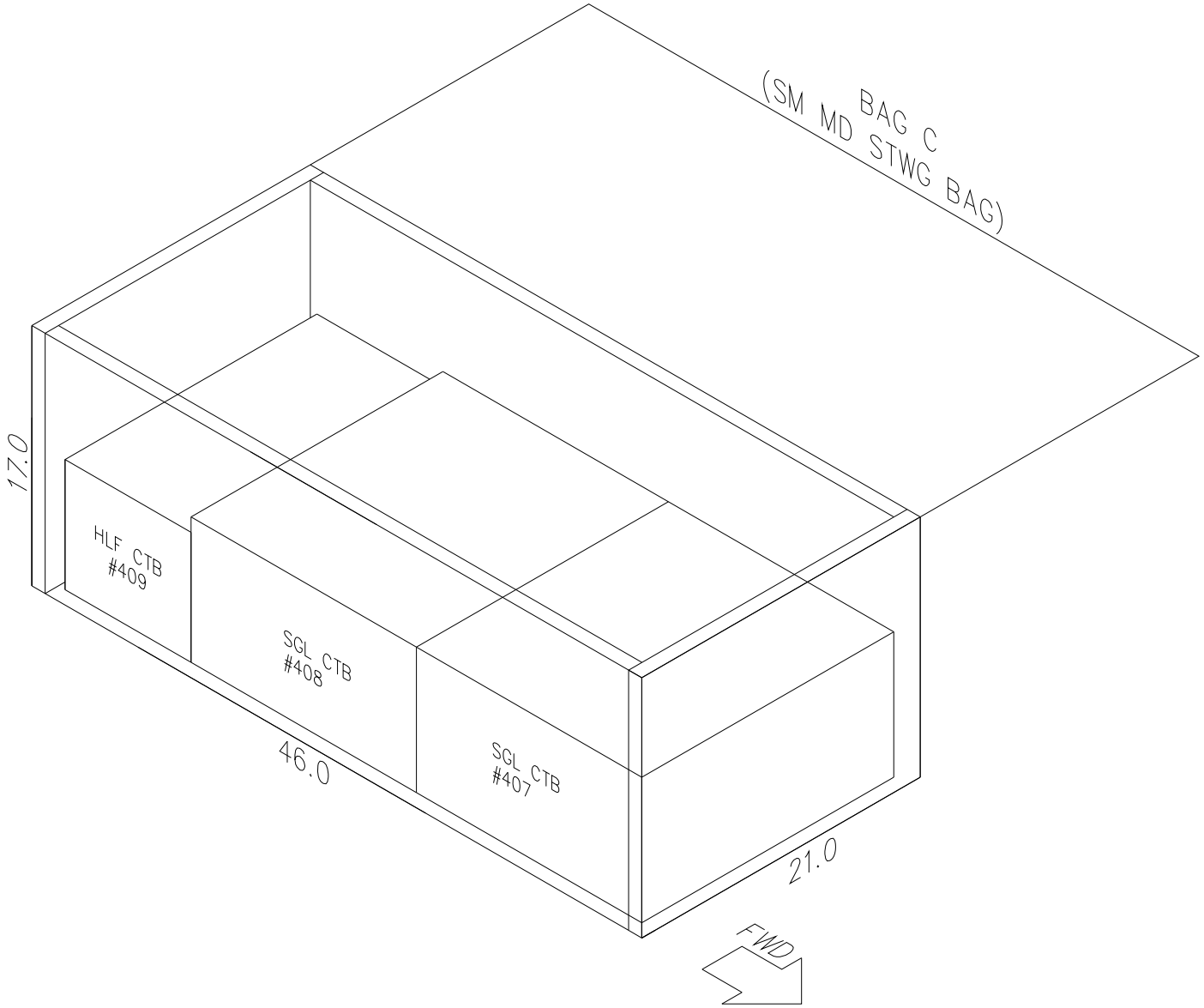

MD CEIL STBD 1 – BAG G

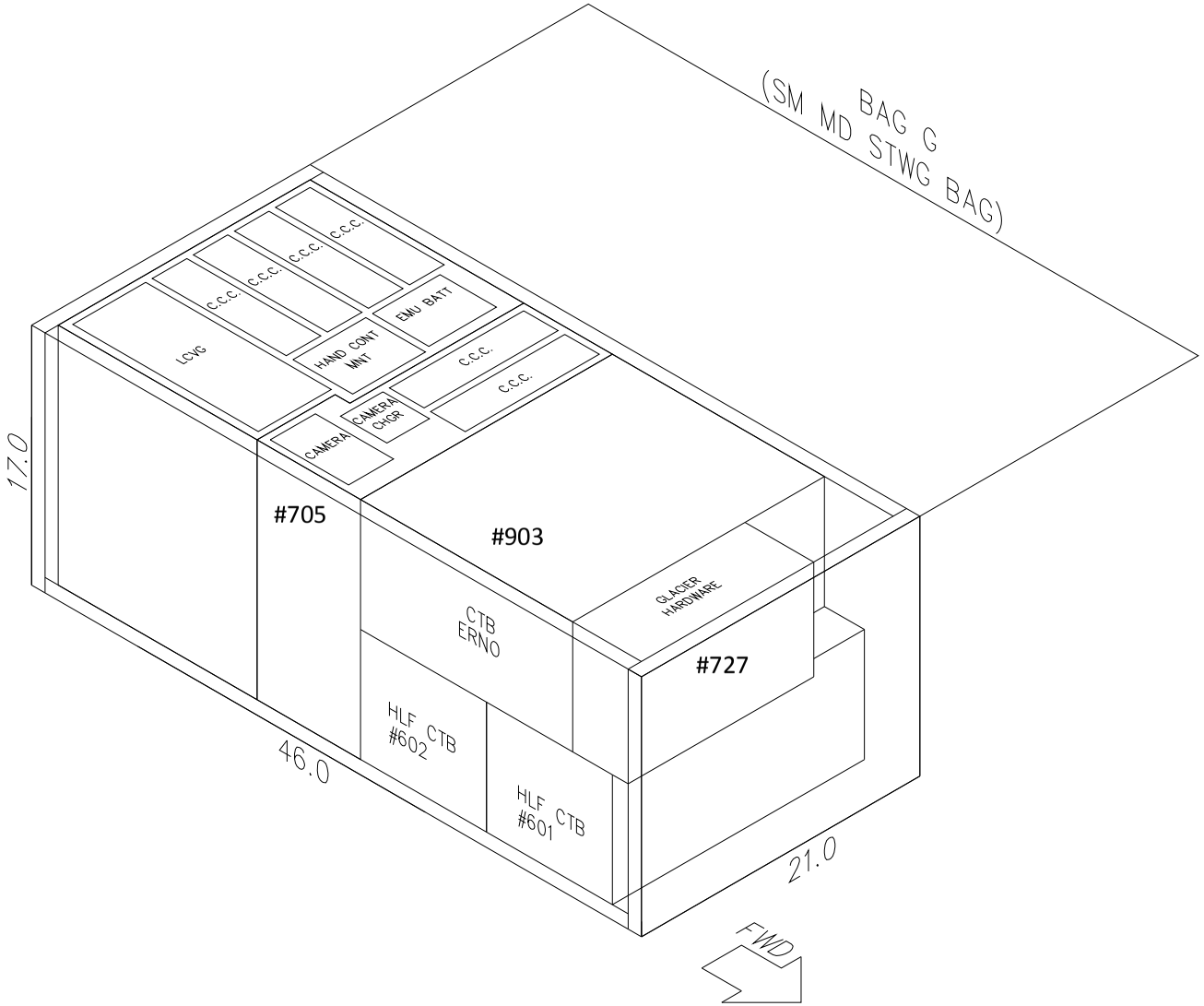

MD FLOOR STBD 1 – BAG D

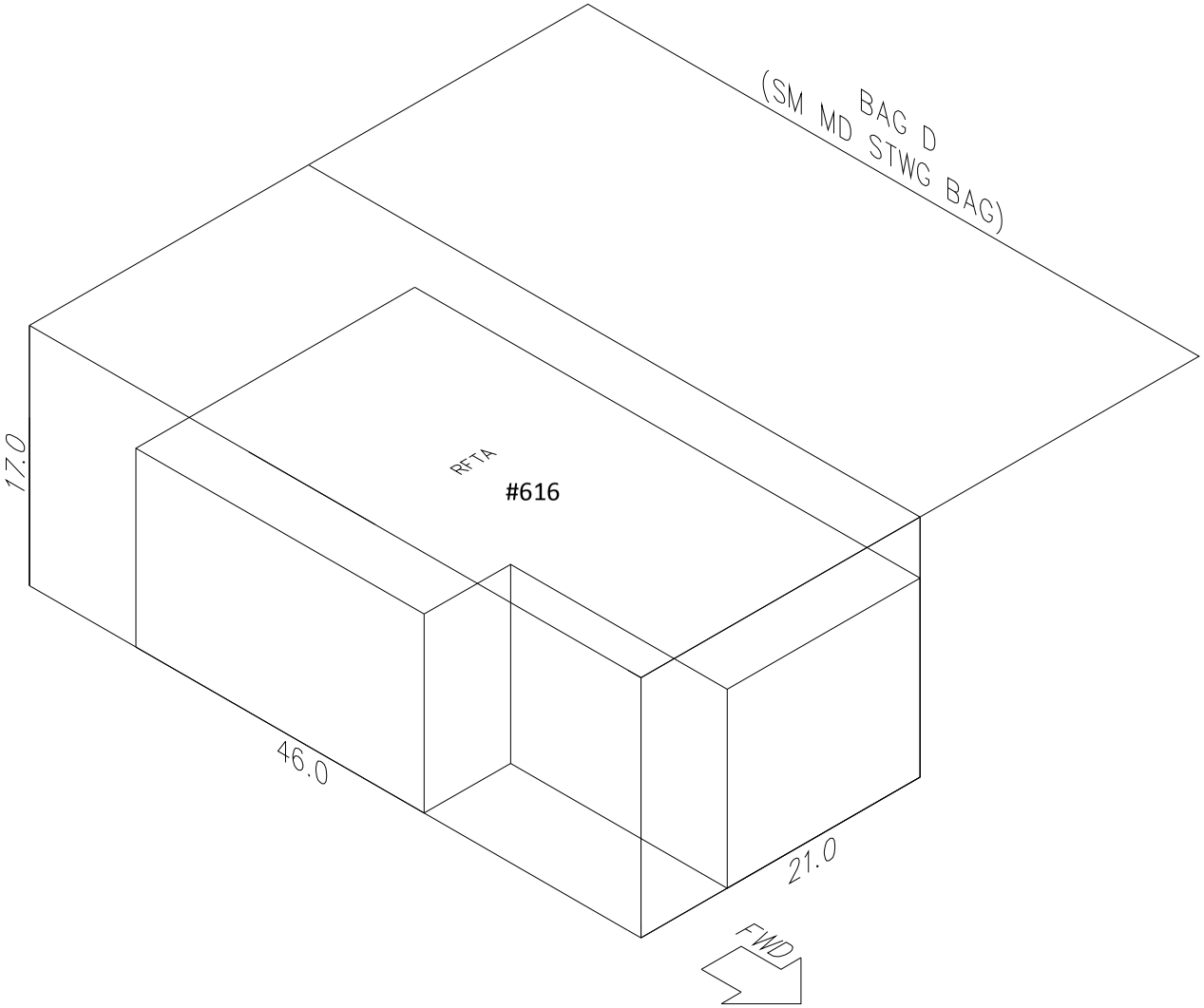

1. HAND CONTROLLER CALIBRATION

1.1 Translational Hand Controller (THC) Calibration

THC

Deflect [X] Axis to positive hard stop where [X] = [X] [Y] [Z]

Deflect [X] Axis to negative hard stop.

Repeat

1.2 Rotational Hand Controller (RHC) Calibration

RHC

Deflect [X] Axis to positive hard stop where [X] = [P] [Y] [R]

Deflect [X] Axis to negative hard stop.

Repeat

2. SETUP

NOTE

1. Verify SRMS at R&R Viewing posn:
   SY= +105.0, +20.9, -51.6, +90.0, +2.0, +15.0 =WR

2. Verify JEMRMS at Stow Position:
   SY=0.0, +90.0, -149.0, -31.0, 0.0, 0.0 =WR

Configure Cameras and overlays as required.

Monitor 1	Monitor 2	Monitor 3	SSC 1 (MON 1)	SSC 2 (DTV)
07: P1 LOIB (-120, -30)	37: MBS Mast (-90, +20)	51: JEM EXT A (0, +40)	WVS EV1	SRMS Elbow (+70, +30) SRMS EE

PCS

MSS: SSRMS: [SSRMS]

Verify 'Loaded Parameters' (two) – VCC Mnvr, SY Held

Change Unloaded Parameters ▶ Unloaded ▶ LEE Tip SRH
Verify 'Unloaded Parameters' (two) – LEE Tip, SR Held

Verify Display – VCC>Battery R&R

Verify Command – SSRMS>Internal

Verify SSRMS at Overnight Park position (within 5 cm/1 deg).

SR	SY	SP	EP	WP	WY	WR
+207.1	+35.5	-86.7	+74.9	-8.8	-141.8	+116.1
X	Y	Z	Pitch	Yaw	Roll	
+898	-207	+560	-65.9	-77.7	-171.6	
FOR	Loaded – VCC Mnvr, SY Held					
Disp	VCC>Battery R&R					

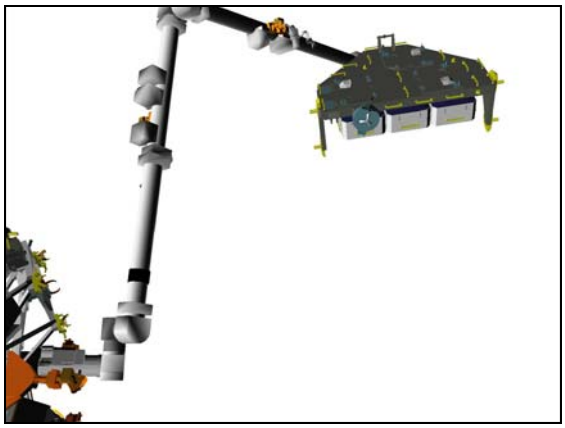

Figure 1.- Overnight Park
(51: JEM EXT A: 0, +40).

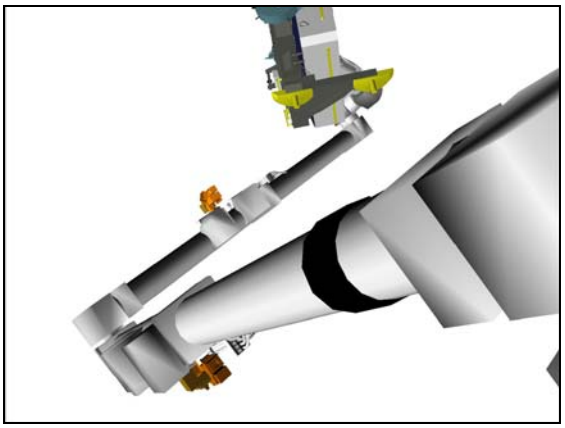

Figure 2.- Overnight Park
(37: MBS Mast: -90, +20).

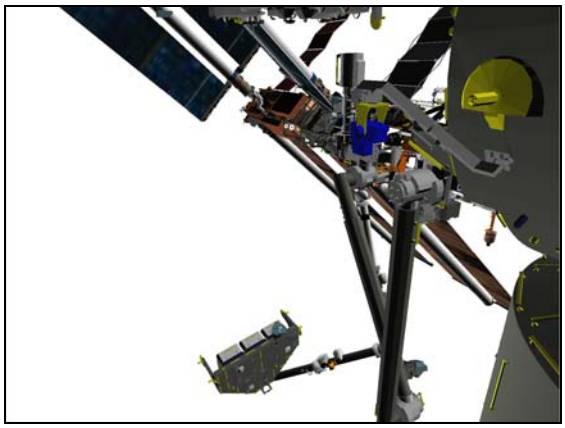

Figure 3.- Overnight Park
(72: SRMS Elbow: +70, +30).

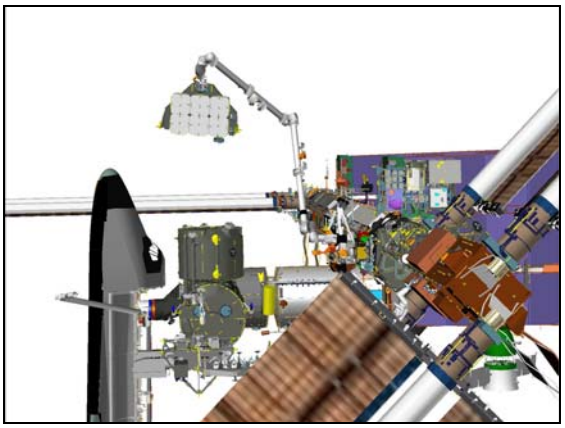

Figure 4.- Overnight Park
(ISS Starboard).

Verify with **MCC-H** Port SARJ and arrays locked for EVA operations.

MSS: SSRMS: MSS Safing: MSS Safing

cmd SSRMS: Remove (Verify Not Safed)

DCP BRAKES SSRMS → OFF (Verify OFF)

RHC RATE → COARSE (Verify Coarse on PCS)

3. JOCAS TO BATTERY C SETUP POSN

PCS MSS: SSRMS: Thrusters: Thruster Controls for MSS Ops

Verify 'Desat Request:' Inhibit
Verify 'Auto Att Control Handover to RS' – Inh

****
* If using shuttle attitude control, verify in attitude,
* then DAP: FREE
****

MSS: SSRMS: SSRMS

Enter Mode – Joint OCAS (Verify blue)

SSRMS Joint OCAS

pick File ▶ EVA3 ▶ P6 Battery C

Verify 'Joint Angles' 'Destination' for Battery C Setup position.

SR	SY	SP	EP	WP	WY	WR
+82.0	+0.9	-65.7	-30.2	-121.9	-186.0	+120.9

cmd Load (Verify Sequence Status – Confirm or Cancel)

MON Verify joint angles and errors are correct on Joint Angle Position overlay.

	SR	SY	SP	EP	WP	WY	WR
(current)	+207.1	+35.5	-86.7	+74.9	-8.8	-141.8	+116.1
TGT	**+82.0**	**+0.9**	**-65.7**	**-30.2**	**-121.9**	**-186.0**	**+120.9**
ERR	+125.1	+34.6	-21.0	+105.1	+113.1	+44.2	-4.8

PCS **cmd** Confirm (Verify Sequence Status – Auto Seq sw - Hot)

NOTE
Expect singularity warning for EP between -15 and +15 degrees.

DCP AUTO SEQ → PROC

PCS MSS: SSRMS: SSRMS

Verify Posn Hold – orange

Verify Joint Angle values.

SR	SY	SP	EP	WP	WY	WR
+82.0	+0.9	-65.7	-30.2	-121.9	-186.0	+120.9
X	Y	Z	Pitch	Yaw	Roll	
-349	+1413	-3	+20.3	+7.5	-16.8	
FOR	Loaded – VCC Mnvr, SY Held					
Disp	VCC>Battery R&R					

DCP BRAKES SSRMS → ON (Verify ON)

```
*************************************************************************
*  If using shuttle attitude control and attitude maintenance reqd:
*  |  DAP:  LVLH
*  |  When rates damped
*  |  |  DAP:  FREE > 2 seconds
*  |  |  DAP:  AUTO
*************************************************************************
```

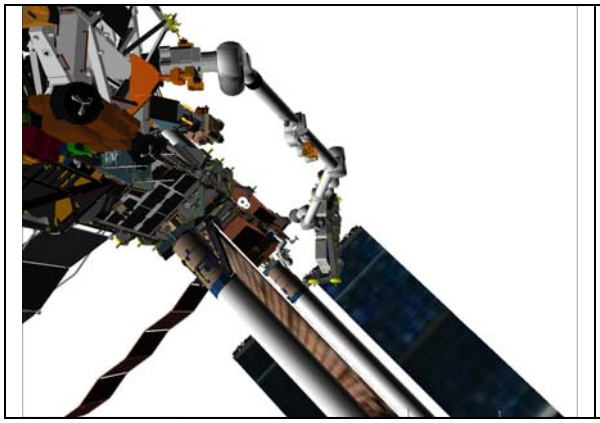

Figure 5.- Batt C Setup
(51: JEM EXT A: -10, +10).

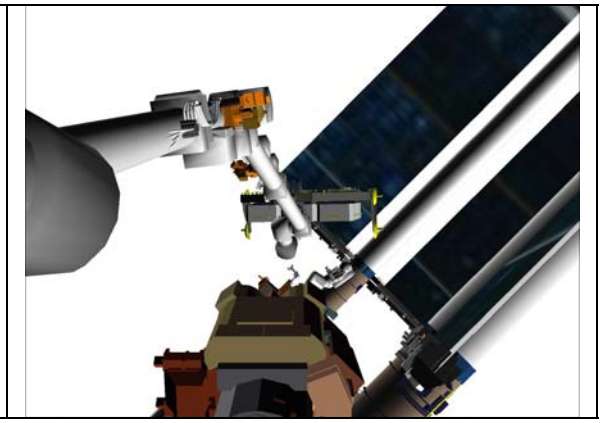

Figure 6.- Batt C Setup
(37: MBS Mast: 0, 0).

4. GCA TO BATTERY C R&R POSN

BODY Direction	Expected Input
In toward EV chest (out)	THC Pull (push)
To EV Left (right)	THC Left (right)
Up / Down	THC Up / Down
Pitch Up / Down	RHC Pitch Up / Down
Yaw Left / Right	RHC Yaw Left / Right
Roll Left / Right	RHC Roll Left / Right

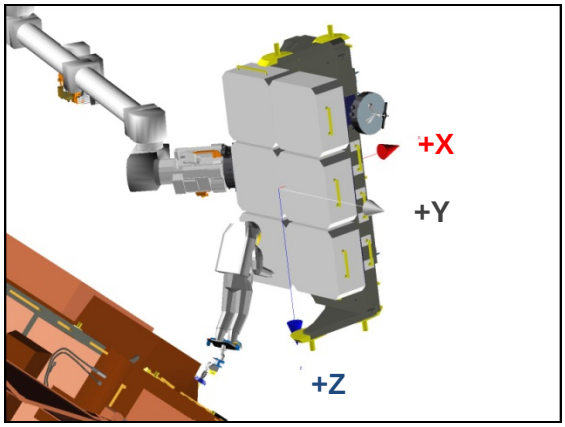

Figure 7.- Battery R&R FOR.

Configure Cameras and overlays as required

Monitor 1	Monitor 2	Monitor 3	SSC 1 (MON 1)	SSC 2 (DTV)
32: MBS POA	37: MBS Mast (0, 0)	51: JEM EXT A (-10, +10)	WVS EV1	SRMS Elbow (+70, +40) SRMS EE

On EV go:

* **********
* If using shuttle attitude control, verify in attitude, then:
* | DAP: FREE
* **********

PCS MSS: SSRMS: Power: SSRMS Power

Verify ‘Payload’ Prime, Redundant (two) – OFF

NOTE
1. Clearance between wrist cluster and truss expected to be about 23 inches. Monitor clearance in JEM EXT-A or MBS Mast.

2. SSRMS Brakes should be applie while the EV crew is performing bolt release and tie-down operations on the VCC.

DCP BRAKES SSRMS → OFF (Verify OFF)

RHC RATE → VERNIER (Verify Vernier on PCS)

MSS: SSRMS: SSRMS

Enter Mode – Manual (Verify blue)

MSS: SSRMS: SSRMS Manual: Joint Lock: Joint Lock

cmd Shoulder Yaw (Verify SY – Locked)

THC/ RHC Mnvr ICC per EVA GCA to Battery C R&R posn (THC -X Pull).

Expected joint angles and FOR.

		Locked					
	SR	SY	SP	EP	WP	WY	WR
Expected	+82.4	+0.9	-71.9	-26.7	-119.3	-186.2	+120.7
	X	Y	Z	Pitch	Yaw	Roll	
Expected	**-448**	+1399	+33	+20.3	+7.5	-16.8	
	FOR	Loaded – VCC Mnvr, SY Held					
	Disp	VCC>Battery R&R					

DCP BRAKES SSRMS → ON (Verify ON)

Give EV GO for Battery C release.

4.1 Separating ICC from Battery C
On EV GO, ready for EVA GCA to separate ICC from Battery C.

BRAKES SSRMS → OFF (Verify OFF)

PCS MSS: SSRMS: SSRMS

Enter Mode – Manual (Verify blue)

MSS: SSRMS: SSRMS Manual: Joint Lock: Joint Lock

cmd Shoulder Yaw (Verify SY – Locked)

THC/ Mnvr ICC to separate ICC from Battery C (THC +X *Push.)*.

RHC

4.2 Installing Old Battery
On EV GO, ready for EVA GCA to install old Battery.

THC/ RHC Mnvr ICC to install old battery (THC -X Pull).

DCP BRAKES SSRMS → ON (Verify ON)

5. BACKOFF
On EV go (verify tethers clear):

BRAKES SSRMS → OFF (Verify OFF)

Enter Mode – Manual (Verify blue)

MSS: SSRMS: SSRMS Manual: Joint Lock: Joint Lock

cmd Shoulder Yaw (Verify SY – Locked)

Mnvr to Batt C Setup posn (within 20 cm/5 deg) THC +X Push

	Locked					
SR	SY	SP	EP	WP	WY	WR
+82.0	+0.9	-65.7	-30.2	-121.9	-186.0	+120.9
X	Y	Z	Pitch	Yaw	Roll	
-349	+1413	-4	+20.3	+7.5	-16.8	
FOR	Loaded – VCC Mnvr, SY Held					
Disp	VCC>Battery R&R					

6. JOCAS TO BATTERY D SETUP POSN (1:25)

PCS MSS: SSRMS: SSRMS

Enter Mode – Joint OCAS (Verify blue)

SSRMS Joint OCAS

pick File ▶ EVA3 ▶ P6 Battery D

Verify ‘Joint Angles’ ‘Destination’ for Battery D Setup position.

SR	SY	SP	EP	WP	WY	WR
+85.0	+0.9	-58.5	-43.6	-117.2	-191.5	+112.2

cmd Load (Verify Sequence Status – Confirm or Cancel)

MON Verify joint angles and errors are correct on Joint Angle Position overlay.

	SR	SY	SP	EP	WP	WY	WR
(current)	+82.0	+0.9	-65.7	-30.2	-121.9	-186.0	+120.9
TGT	**+85.0**	**+0.9**	**-58.5**	**-43.6**	**-117.2**	**-191.5**	**+112.2**
ERR	-3.0	0.0	-7.2	+13.4	-4.7	+5.5	+8.7

PCS **cmd** Confirm (Verify Sequence Status – Auto Seq sw - Hot)

DCP AUTO SEQ → PROC

PCS MSS: SSRMS: SSRMS

Verify Posn Hold – orange

Verify Joint Angle values.

SR	SY	SP	EP	WP	WY	WR
+85.0	+0.9	-58.5	-43.6	-117.2	-191.5	+112.2
X	Y	Z	Pitch	Yaw	Roll	
-322	+1360	+50	+18.3	+10.4	-23.4	
FOR	Loaded – VCC Mnvr, SY Held					
Disp	VCC>Battery R&R					

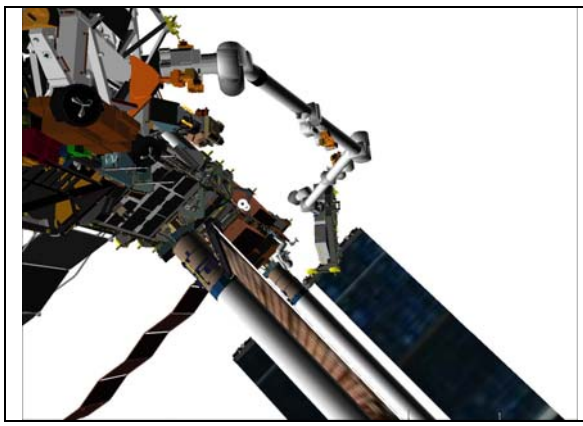

Figure 8.- Batt D Setup
(51: JEM EXT A: -10, +10).

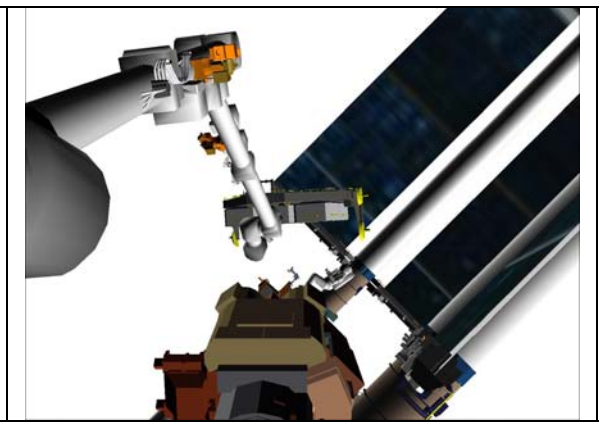

Figure 9.- Batt D Setup
(37: MBS Mast: 0, 0).

7. GCA TO BATTERY D R&R POSN
On EV go:

> NOTE
> Clearance between wrist cluster and truss expected to be about 28 inches. Monitor clearance in JEM EXT-A or MBS Mast.

MSS: SSRMS: SSRMS

Enter Mode – Manual (Verify blue)

MSS: SSRMS: SSRMS Manual: Joint Lock: Joint Lock

cmd Shoulder Yaw (Verify SY – Locked)

THC/ RHC — Mnvr ICC per EVA GCA to Battery D R&R posn (THC -X Pull).

Expected joint angles and FOR.

		Locked					
	SR	SY	SP	EP	WP	WY	WR
Expected	+85.1	+0.9	-63.7	-42.4	-113.1	-191.6	+112.1
	X	Y	Z	Pitch	Yaw	Roll	
Expected	**-422**	+1341	+84	+18.3	+10.4	-23.4	
	FOR	Loaded – VCC Mnvr, SY Held					
	Disp	VCC>Battery R&R					

DCP — BRAKES SSRMS → ON (Verify ON)

Give EV GO for Battery D release.

7.1 Separating ICC from Battery D
On EV GO, ready for EVA GCA to separate ICC from Battery D:

BRAKES SSRMS → OFF (Verify OFF)

PCS — MSS: SSRMS: SSRMS

Enter Mode – Manual (Verify blue)

MSS: SSRMS: SSRMS Manual: Joint Lock: Joint Lock

cmd Shoulder Yaw (Verify SY – Locked)

THC/ RHC — Mnvr ICC to separate ICC from Battery D (THC +X Push).

7.2 Installing Old Battery
On EV GO, ready for EVA GCA to install old Battery.

THC/ RHC — Mnvr ICC to install old battery (THC -X Pull).

DCP — BRAKES SSRMS → ON (Verify ON)

8. BACKOFF
On EV go (verify tethers clear):

BRAKES SSRMS → OFF (Verify OFF)

PCS MSS: SSRMS: SSRMS

Enter Mode – Manual (Verify blue)

MSS: SSRMS: SSRMS Manual: Joint Lock: Joint Lock

cmd Shoulder Yaw (Verify SY – Locked)

Mnvr to Batt D Setup posn (within 20 cm/5 deg) THC +X Push

	Locked					
SR	SY	SP	EP	WP	WY	WR
+85.0	+0.9	-58.5	-43.6	-117.2	-191.5	+112.2
X	Y	Z	Pitch	Yaw	Roll	
-322	+1360	+51	+18.3	+10.4	-23.4	
FOR	Loaded – VCC Mnvr, SY Held					
Disp	VCC>Battery R&R					

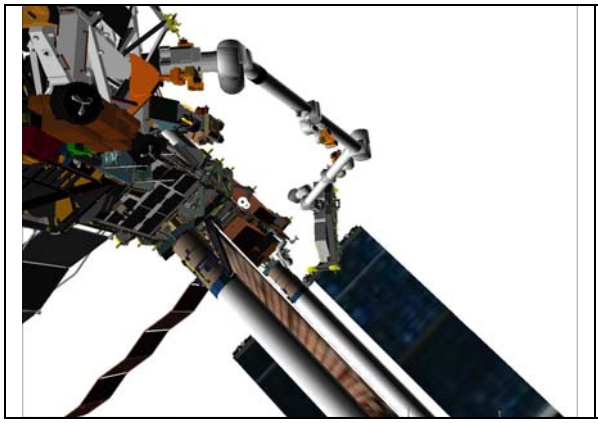

Figure 10.- Batt D Backoff
(51: JEM EXT A: -10, +10).

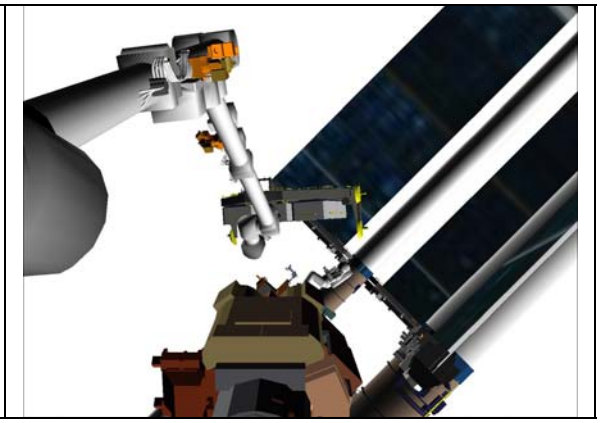

Figure 11.- Batt D Backoff
(37: MBS Mast: 0, 0).

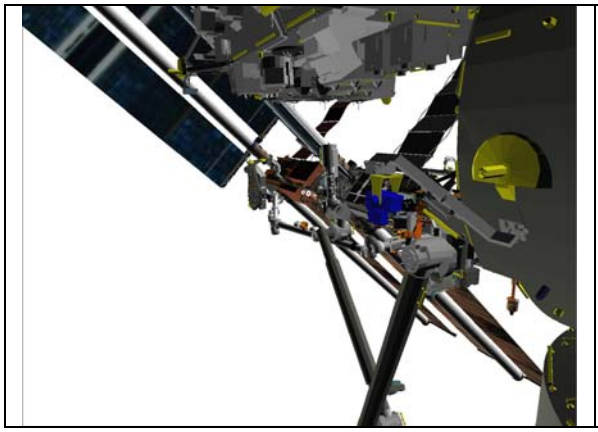

Figure 12.- Batt D Backoff
(71: SRMS Elbow: +70, +40).

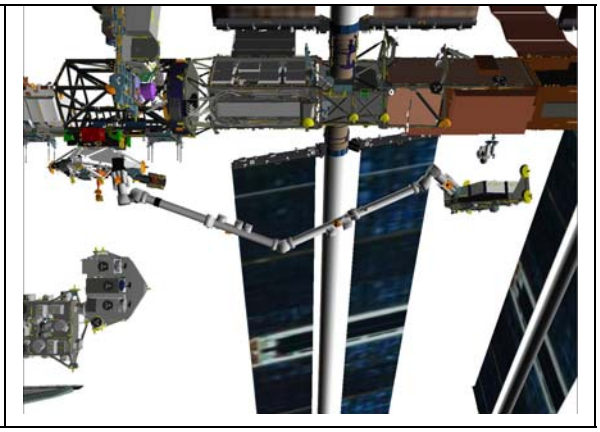

Figure 13.- Batt D Backoff
(ISS Nadir).

9. JOCAS TO BATTERY E SETUP (9:30)

MSS: SSRMS: SSRMS

Enter Mode – Joint OCAS (Verify blue)

SSRMS Joint OCAS

pick File ▶ EVA4 ▶ P6 Battery E

Verify 'Joint Angles' 'Destination' for Battery E Setup position.

SR	SY	SP	EP	WP	WY	WR
+81.1	+0.9	-55.3	-51.6	-110.1	-190.0	+113.6

cmd Load (Verify Sequence Status – Confirm or Cancel)

MON Verify joint angles and errors are correct on Joint Angle Position overlay.

	SR	SY	SP	EP	WP	WY	WR
(current)	+85.0	+0.9	-58.5	-43.6	-117.2	-191.5	+112.2
TGT	**+81.1**	**+0.9**	**-55.3**	**-51.6**	**-110.1**	**-190.0**	**+113.6**
ERR	+3.9	0.0	-3.2	+8.0	-7.1	-1.5	-1.4

PCS **cmd** Confirm (Verify Sequence Status – Auto Seq sw - Hot)

DCP AUTO SEQ → PROC

PCS MSS: SSRMS: SSRMS

Verify Posn Hold – orange

Verify Joint Angle values.

SR	SY	SP	EP	WP	WY	WR
+81.1	+0.9	-55.3	-51.6	-110.1	-190.0	+113.6
X	Y	Z	Pitch	Yaw	Roll	
-343	+1308	-42	+17.1	+8.0	-24.9	
FOR	Loaded – VCC Mnvr, SY Held					
Disp	VCC>Battery R&R					

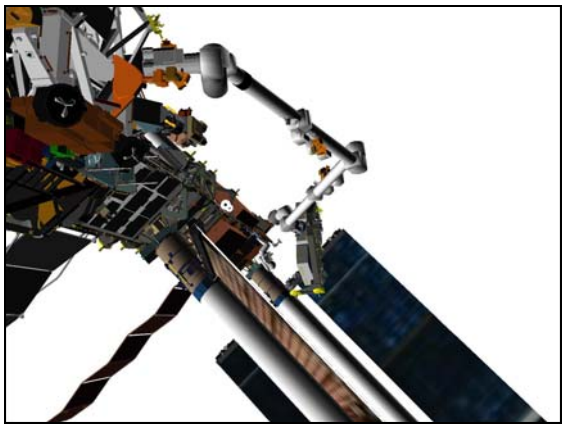

Figure 14.- Batt E Setup
(51: JEM EXT A: -10, +10).

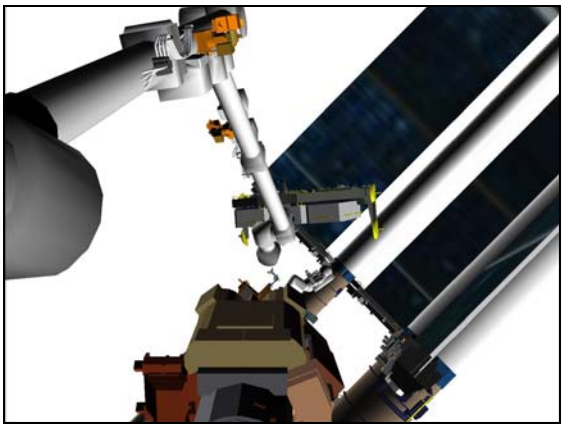

Figure 15.- Batt E Setup
(37: MBS Mast: 0, 0).

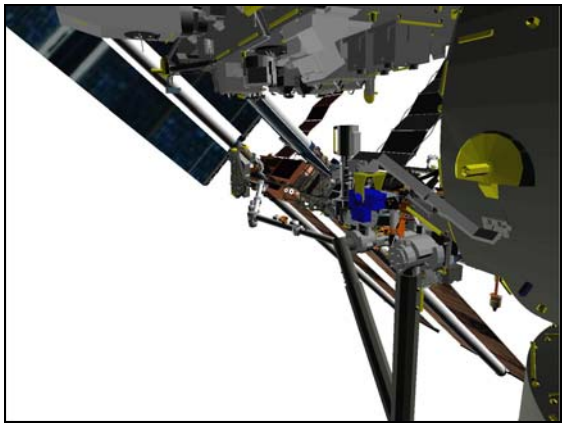

Figure 16.- Batt E Setup
(72: SRMS Elbow: +70, +40).

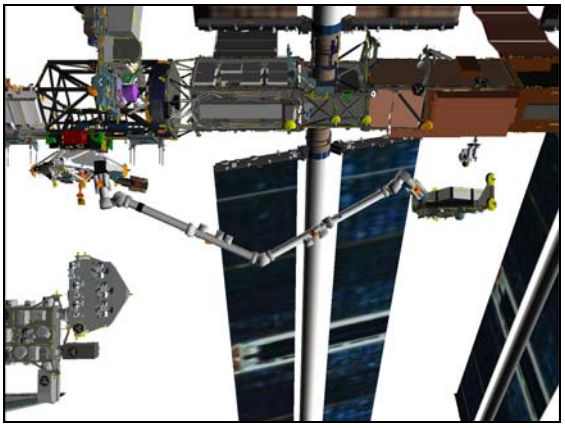

Figure 17.- Batt E Setup
(ISS Nadir).

10. GCA TO BATTERY E R&R

NOTE
Clearance between wrist cluster and truss expected to be about 27 inches. Monitor clearance in MBS Mast.

On EV go:

PCS MSS: SSRMS: SSRMS

Enter Mode – Manual (Verify blue)

MSS: SSRMS: SSRMS Manual: Joint Lock: Joint Lock

cmd Shoulder Yaw (Verify SY – Locked)

THC/ RHC — Mnvr ICC per EVA GCA to Battery E R&R posn (THC -X Pull)

Expected joint angles and FOR.

		Locked					
	SR	SY	SP	EP	WP	WY	WR
Expected	+81.2	+0.9	-61.1	-49.5	-106.4	-190.1	+113.5
	X	Y	Z	Pitch	Yaw	Roll	
Expected	**-443**	+1294	-11	+17.1	+8.0	-24.9	
	FOR	Loaded – VCC Mnvr, SY Held					
	Disp	VCC>Battery R&R					

DCP — BRAKES SSRMS → ON (Verify ON)

Give EV GO for Battery E release.

10.1 Separating ICC from Battery E
On EV GO, ready for EVA GCA to separate ICC from Battery E:

DCP — BRAKES SSRMS → OFF (Verify OFF)

PCS — MSS: SSRMS: SSRMS

Enter Mode – Manual (Verify blue)

MSS: SSRMS: SSRMS Manual: Joint Lock: Joint Lock

cmd Shoulder Yaw (Verify SY – Locked)

THC/ RHC — Mnvr ICC to separate ICC from Battery E (THC +X Push).

10.2 Installing Old Battery
On EV GO, ready for EVA GCA to install old Battery.

THC/ RHC — Mnvr ICC to install old battery (THC -X Pull).

DCP — BRAKES SSRMS → ON (Verify ON)

11. BACKOFF
On EV go (verify tethers clear):

BRAKES SSRMS → OFF (Verify OFF)

Enter Mode – Manual (Verify blue)

PCS — MSS: SSRMS: SSRMS Manual: Joint Lock: Joint Lock

cmd Shoulder Yaw (Verify SY – Locked)

Mnvr to Batt E Setup posn (within 20 cm/5 deg) THC +X Push

	Locked					
SR	SY	SP	EP	WP	WY	WR
+81.1	+0.9	-55.3	-51.6	-110.1	-190.0	+113.6
X	Y	Z	Pitch	Yaw	Roll	
-342	+1308	-42	+17.1	+8.0	-25.0	
FOR	Loaded – VCC Mnvr, SY Held					
Disp	VCC>Battery R&R					

12. JOCAS TO BATTERY F SETUP

NOTE
Clearance between ICC and SAW is 48 inches at end of mnvr. Monitor clearance in MBS Mast or SRMS Elbow.

PCS MSS: SSRMS: SSRMS

Enter Mode – Joint OCAS (Verify blue)

SSRMS Joint OCAS

pick File ▶ EVA4 ▶ P6 Battery F

Verify 'Joint Angles' 'Destination' for Battery F Setup position.

SR	SY	SP	EP	WP	WY	WR
+72.1	+0.9	-57.2	-53.3	-105.8	-183.9	+144.4

cmd Load (Verify Sequence Status – Confirm or Cancel)

MON Verify joint angles and errors are correct on Joint Angle Position overlay.

	SR	SY	SP	EP	WP	WY	WR
(current)	+81.1	+0.9	-55.3	-51.6	-110.1	-190.0	+113.6
TGT	**+72.1**	**+0.9**	**-57.2**	**-53.3**	**-105.8**	**-183.9**	**+144.4**
ERR	+9.0	0.0	+1.9	+1.7	-4.3	-6.1	-30.8

PCS **cmd** Confirm (Verify Sequence Status – Auto Seq sw - Hot)

DCP AUTO SEQ → PROC

PCS MSS: SSRMS: SSRMS

Verify Posn Hold – orange

Verify Joint Angle values.

SR	SY	SP	EP	WP	WY	WR
+72.1	+0.9	-57.2	-53.3	-105.8	-183.9	+144.4
X	Y	Z	Pitch	Yaw	Roll	
-422	+1260	-191	+33.4	+1.1	-10.1	
FOR	Loaded – VCC Mnvr, SY Held					
Disp	VCC>Battery R&R					

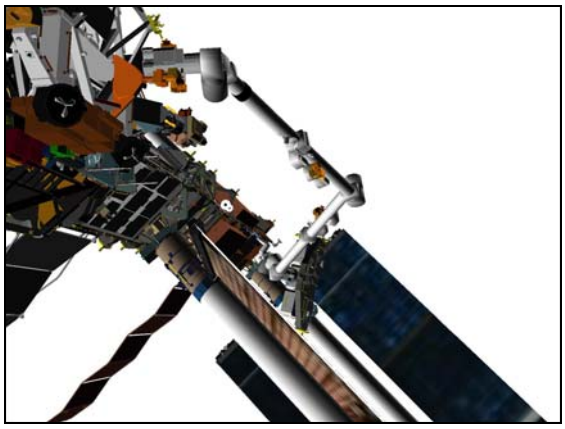

Figure 18.- Batt F Setup
(51: JEM EXT A: -10, +10).

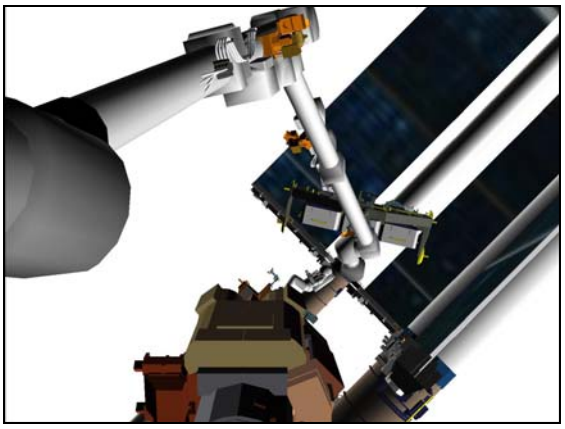

Figure 19.- Batt F Setup
(37: MBS Mast: 0, 0).

13. GCA TO BATTERY F R&R
On EV go:

NOTE
Clearance between ICC and SAW expected to be about 32 inches. Monitor clearance in MBS Mast or SRMS Elbow.

MSS: SSRMS: SSRMS

Enter Mode – Manual (Verify blue)

MSS: SSRMS: SSRMS Manual: Joint Lock: Joint Lock

cmd Shoulder Yaw (Verify SY – Locked)

THC/ RHC — Mnvr ICC per EVA GCA to Battery F R&R posn (THC -X Pull)

Expected joint angles and FOR.

		Locked					
	SR	SY	SP	EP	WP	WY	WR
Expected	+73.7	+0.9	-63.7	-49.6	-102.9	-184.9	+143.1
	X	Y	Z	Pitch	Yaw	Roll	
Expected	**-515**	+1258	-130	+33.4	+1.1	-10.1	
	FOR	Loaded – VCC Mnvr, SY Held					
	Disp	VCC>Battery R&R					

DCP — BRAKES SSRMS → ON (Verify ON)

Give EV GO for Battery F release.

13.1 Separating ICC from Battery F
On EV GO, ready for EVA GCA to separate ICC from Battery F.

BRAKES SSRMS → OFF (Verify OFF)

PCS — MSS: SSRMS: SSRMS

Enter Mode – Manual (Verify blue)

MSS: SSRMS: SSRMS Manual: Joint Lock: Joint Lock

cmd Shoulder Yaw (Verify SY – Locked)

THC/ RHC — Mnvr ICC to separate ICC from Battery F (THC +X Push).

13.2 Installing Old Battery
On EV GO, ready for EVA GCA to install old Battery.

THC/ RHC — Mnvr ICC to install old battery (THC -X Pull).

DCP — BRAKES SSRMS → ON (Verify ON)

14. BACKOFF
On IV go to mnvr to P6 clear:

BRAKES SSRMS → OFF (Verify OFF)

Enter Mode – Manual (Verify blue)

MSS: SSRMS: SSRMS Manual: Joint Lock: Joint Lock

cmd Shoulder Yaw (Verify SY – Locked)

Mnvr to Batt F Setup posn (within 20 cm/5 deg) THC +X Push

	Locked					
SR	SY	SP	EP	WP	WY	WR
+72.1	+0.9	-57.2	-53.3	-105.8	-183.9	+144.4
X	Y	Z	Pitch	Yaw	Roll	
-422	+1260	-191	+33.4	+1.1	-10.1	
FOR	Loaded – VCC Mnvr, SY Held					
Disp	VCC>Battery R&R					

15. SINGLE JOINT TO P6 CLEAR
Configure Cameras and overlays as required

Monitor 1	Monitor 2	Monitor 3	SSC 1 (MON 1)	SSC 2 (DTV)
22: Base Elbow (+170, 0)	37: MBS Mast (0, 0)	51: JEM EXT A (0, +20)	WVS EV1	SRMS Elbow (+70, +30) SRMS EE

PCS MSS: SSRMS: SSRMS

Enter Mode – Single (Verify blue)

WARNING

The active joint must be checked on the PCS before initiating motion. Failure to do so may result in movement of the wrong joint.

NOTE
Expect singularity warning for EP between -15 and +15 deg.

RHC RATE – as required (VERNIER within 1.5 m of structure)

DCP JOINT SELECT → ELBOW PITCH (Verify EP – Selected on PCS)

THC Perform "+" Single Joint maneuver to EP: +80.0 (THC up).

Verify SSRMS at P6 Clear position (within 20 cm/5 deg).

SR	SY	SP	EP	WP	WY	WR
+72.1	+0.9	-57.2	**+80.0**	-105.8	-183.9	+144.4
X	Y	Z	Pitch	Yaw	Roll	
+1063	+295	-78	-175.7	-59.0	-160.4	
FOR	Loaded – VCC Mnvr, SY Held					
Disp	VCC>Battery R&R					

```
* ************************************************************************
*  If using shuttle attitude control and attitude maintenance reqd:
*  |  DAP:  LVLH
*  |  When rates damped
*  |  |  DAP:  FREE > 2 seconds
*  |  |  DAP:  AUTO
*  |  |  When in attitude and rates damped
*  |  |        DAP:  FREE
* ************************************************************************
```

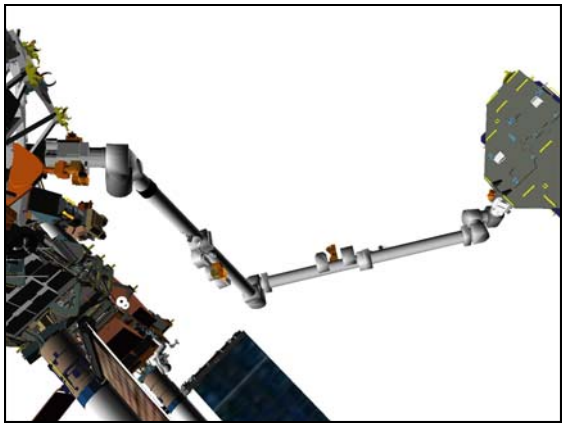

Figure 20.- P6 Clear Position
(51: JEM EXT A: 0, +20).

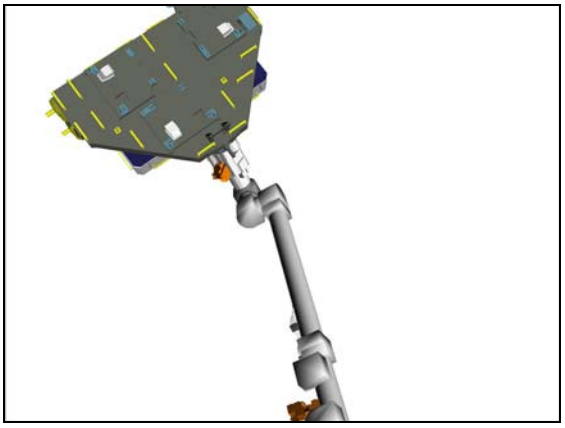

Figure 21.- P6 Clear Position
(37: MBS Mast: -10, +50).

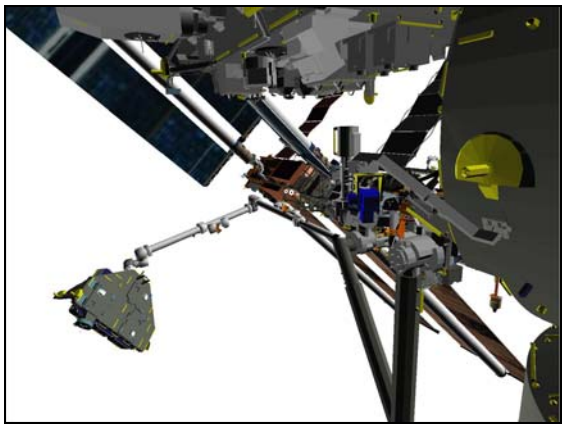

Figure 22.- P6 Clear Position
(71: SRMS Elbow: +70, +40).

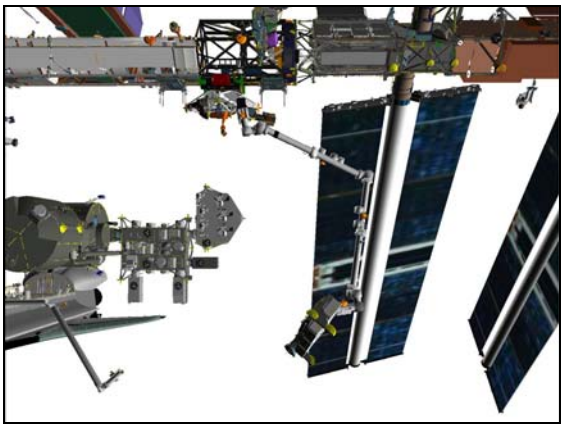

Figure 23.- P6 Clear Position
(ISS Nadir).

16. <u>JOCAS TO ICC HANDOFF (7 MINUTES)</u>
Configure Cameras and overlays as required.

Monitor 1	Monitor 2	Monitor 3	SSC 1 (MON 1)	SSC 2 (DTV)
07: P1 LOIB (-110, -20)	09: P1 LOOB (-150, -20) 37: MBS Mast (-10, +50)	51: JEM EXT A (0, +20)	Camera B (-40, +10)	SRMS Elbow (+45, +15) SRMS EE

RHC RATE → COARSE (Verify Coarse on PCS)

PCS MSS: SSRMS: SSRMS

Enter Mode – Joint OCAS (Verify blue)

SSRMS Joint OCAS

pick File ▶ EVA4 ▶ VCC Handoff

Verify 'Joint Angles' 'Destination' for ICC Handoff position.

SR	SY	SP	EP	WP	WY	WR
+20.4	+47.8	-20.3	+57.3	-239.3	-169.0	+82.2

cmd Load (Verify Sequence Status – Confirm or Cancel)

MON Verify joint angles and errors are correct on Joint Angle Position overlay.

	SR	SY	SP	EP	WP	WY	WR
(current)	+72.1	+0.9	-57.2	+80.0	-105.8	-183.9	+144.4
TGT	**+20.4**	**+47.8**	**-20.3**	**+57.3**	**-239.3**	**-169.0**	**+82.2**
ERR	+51.7	-46.9	-36.9	+22.7	+133.5	-14.9	+62.2

PCS **cmd** Confirm (Verify Sequence Status – Auto Seq sw - Hot)

DCP AUTO SEQ → PROC

PCS MSS: SSRMS: SSRMS

Verify Posn Hold – orange

Verify Joint Angle values.

SR	SY	SP	EP	WP	WY	WR
+20.4	+47.8	-20.3	+57.3	-239.3	-169.0	+82.2

DCP BRAKES SSRMS → ON (Verify ON)

PCS MSS: SSRMS: Thrusters: Thruster Controls for MSS Ops

Verify 'Desat Request:' Inhibit
Verify 'Auto Att Control Handover to RS' – Inh

```
*************************************************************************
*  If using shuttle attitude control and attitude maintenance reqd:
*  |  DAP:  LVLH
*  |  When rates damped
*  |  |  DAP:  FREE > 2 seconds
*  |  |  DAP:  AUTO
*  |  |  When in attitude and rates damped
*  |  |        DAP:  FREE
*************************************************************************
```

Give SRMS operator GO for ICC Grapple.

Give **MCC-H** GO for Port SARJ and arrays autotrack

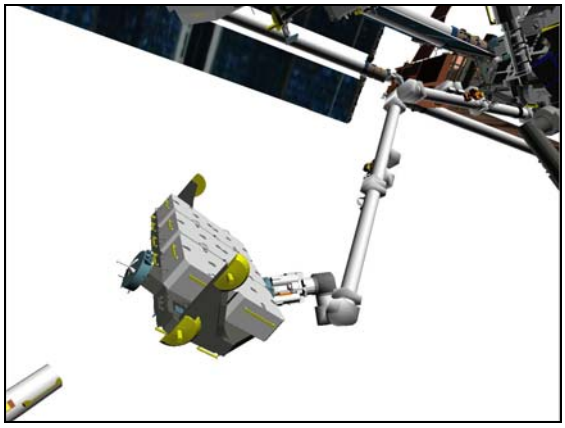

Figure 24.- ICC Handoff
(71: SRMS Elbow: +40, +30).

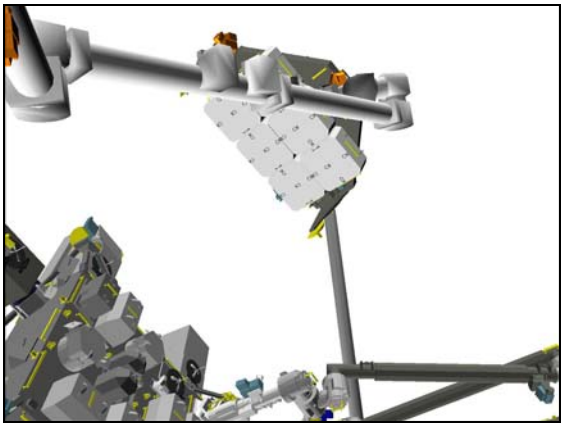

Figure 25.- ICC Handoff
(37: MBS Mast: +150, +60).

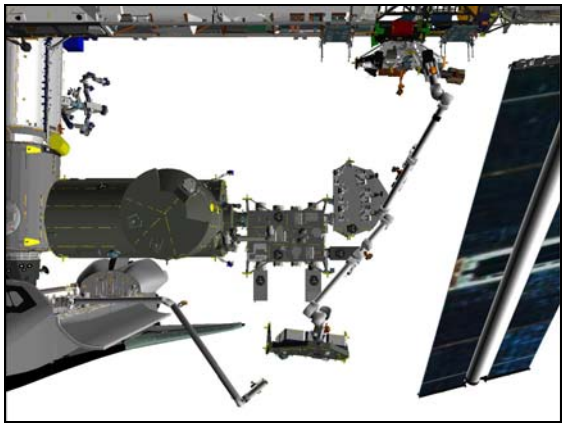

Figure 26.- ICC Handoff
(ISS Nadir).

17. RELEASE ICC

Configure Cameras and overlays as required.

Monitor 1	Monitor 2	Monitor 3	SSC 1 (MON 1)	SSC 2 (DTV)
09: P1 LOOB (-170, -10) 07: P1 LOIB (-130, -10)	25: Tip LEE	24: Tip Elbow (-20, 0)	Camera B (-40, +10)	SRMS Elbow (+45, +5)

On SRMS Operator GO, SRMS grappled with brakes on, SSRMS Go for ICC Release:

DCP BRAKES SSRMS → OFF (Verify OFF)

RHC RATE → VERNIER (Verify Vernier on PCS)

PCS MSS: SSRMS: Rate: SSRMS Rate

Set 'Scale' 'Vernier' Rate Scale: as required

MSS: SSRMS: SSRMS

Change Display ▶ ISS ▶ ISSACS (Verify ISS>ISSACS)

17.1 SSRMS Limp

MSS: SSRMS: Limp: SSRMS Limp

cmd All Limp (Verify Limp – blue)

MSS: SSRMS: SSRMS

Verify all joints – Limped

17.2 Payload Power

MSS: SSRMS: Power: SSRMS Power

Verify 'Payload' Prime, Redundant (two) – OFF

17.3 Auto Release - Push Off

MSS: SSRMS: Tip LEE: SSRMS Tip LEE

cmd Release ▶ Automatic ▶ Slow (Verify Speed – Slow)

Verify '**Confirm or Terminate**' prompt.

CAUTION
Due to end-to-end system latency, the RHC Trigger is hot up to 3 seconds prior to receiving a Trigger Hot icon status on the PCS.

NOTE
Once the trigger is hot, only safing or trigger commands should be sent to the Robotics equipment. If a configuration change is required, including routing MSS Cameras, safe the system to exit LEE operations (SPN 1892, 3160).

cmd Confirm (Verify RHC Trigger Hot icon)

Verify LEE Mode – Auto Release

RHC TRIGGER → press (momentarily)

PCS
Verify 'Umbilical' Demate – blue (10 s max)
Verify 'Latch' Unlatch – blue (65 s max)
Verify 'Carriage' Retract – grey (90 s max)
Verify 'Snare' Open – blue (12 s max)
Verify 'Carriage' Derigidize – blue (90 s max)
Verify 'Carriage' Extend – blue (90 s max)

17.4 SSRMS Backoff

MSS: SSRMS: Limp: SSRMS Limp

cmd None Limp (Verify Standby – blue)

MSS: SSRMS: SSRMS

Enter Mode – Manual (Verify blue)

MSS: SSRMS: SSRMS Manual: Joint Lock: Joint Lock

cmd Shoulder Roll (Verify SR – Locked)

THC Back off from grapple fixture to VCC Release position.

Locked						
SR	SY	SP	EP	WP	WY	WR
+20.4	+48.7	-24.0	+69.4	-247.7	-168.2	+81.8
X	Y	Z	Pitch	Yaw	Roll	
+1621	-1773	+57	-28.5	+12.6	-66.0	
FOR	Unloaded – LEE TIP, SR Held					
Disp	ISS>ISSACS					

18. SINGLE JOINT TO JEMRMS CLEAR

Configure Cameras and overlays as required.

Monitor 1	Monitor 2	Monitor 3	SSC 1 (MON 1)	SSC 2 (DTV)
07: P1 LOIB (-130, -10) 09: P1 LOOB (-170, -10)	37: MBS Mast (+70, +80)	24: Tip Elbow (-20, 0)	Camera B (-40, +10)	SRMS Elbow (+45, +5)

PCS MSS: SSRMS: Rate: SSRMS Rate

Set 'Scale' 'Vernier' Rate Scale: 1.0 (Verify 1.0)

MSS: SSRMS: SSRMS

Enter Mode – Single (Verify blue)

DCP JOINT SELECT → SHOULDER PITCH (Verify SP – Selected on PCS)

THC Perform "+" Single Joint maneuver to SP: +55 (THC up).

> NOTE
> Expect the following message when safing is commanded:
> '**R3Z - MSS OCS SSRMS Prime(Redun) ACU SRT Cat-1 Brk Stat Fail**' (SCR 17495)
> This message should return to Norm.

DCP SAFING → SAFE (Verify ON)

Give SRMS operator GO for ICC Berth.

EMU ITEMS

Marshburn Glove

Per Tom's post EVA 2 glove fit report, we have developed a comfort glove alteration procedure which should alleviate the issue on EVA 4. This can be performed during the EMU RCNFG/SWAP EVA 4, (EVA, AIRLOCK CONFIG), FS 2-15, scheduled at GMT 204/15:23 (MET 07/17:15). Reference {Uplinked Procedures; US SODF: EVA Task; 20-0561 (MSG 077) MB Comfort Glove Alteration} for the procedure.

Marshburn CCA

Due to the quantity of moisture and loss of audio Tom reported in his primary CCA (Mb) (s/n 1180) left earpiece, MCC recommends using his backup CCA (Wk backup) (s/n 1223), stowed in Mb ECOK. Tom can stow his primary CCA (Mb) (s/n 1180) in the Mb ECOK.

EMU 3005 Reconfiguration for EVA 4

Because EMU 3005's leg rings were exposed, there is a small possibility the Manual lock (Lock #1) may have been bumped open. Before using 3005 for EVA 4, verify all locks are engaged and the rings are covered.

Make the following pen & ink change to EMU RCNFG/SWAP EVA 4, (EVA, AIRLOCK CONFIG), FS 2-17. You can reference EMU RESIZE (EVA, EMU CONT PROCS), 12-24 for a diagram of the **DISCONNECT IN LOCKED POSITION**.

ADD :

EMU 3005 20. Verify all Leg Locks are locked
Leg Rings – Covered

PGT Battery s/n 1004

PGT battery s/n 1004 got an 'OverTemp Err' last night and did not get charged. This battery will not be used again until EVA 5, so it will be added to the FD10 Battery Recharge Plan. On the STS-127 EVA Battery Recharge Plan for FD10, please pen and ink HL Battery s/n 1004 into slot BC2 CH5. Reference diagram below. For the BSA Battery Charge Term today (1.605 BSA BATTERY RECHARGE), in Step 17 (If PCS not available), verify 'Look At' message for BC2 CH3 using the 'HISTORY', and report to MCC.

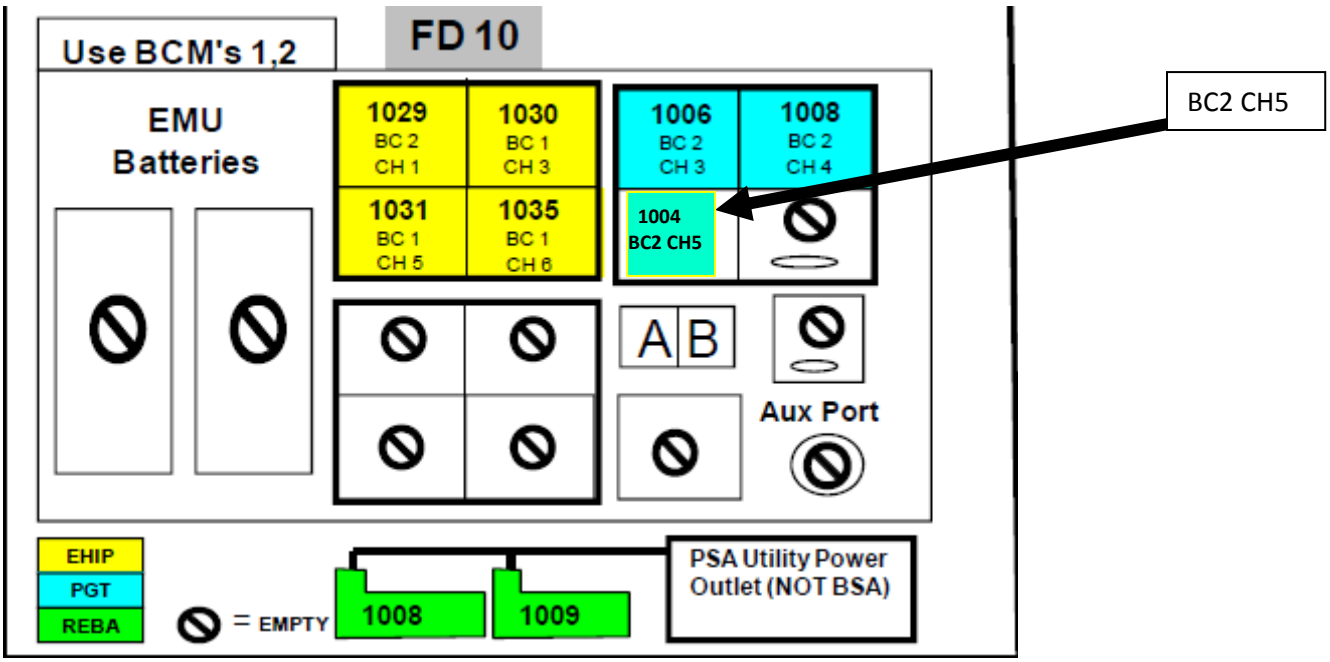

EVA ITEMS

Great job on EVA 3! We have some changes for you for EVA 4. We are considering the use of the Shuttle Contingency LiOH to try to finish the Battery replacements on EVA 4. Message 20-0560 contains your preliminary EVA 4 Summary Timeline which is now only P6 Battery tasks (all other tasks deleted).

- Remember to reinstall the tether extender on the Airlock Hatch D-Ring
- We are working with the MER to get you a revised plan of attack on Battery C
- During the EVA, EV1 will need to verify the Indicators on Battery 3 (s/n 15) which is installed in slot B to ensure it is in a good config for landing
- We have revised the EVA 4 Tool Config, which we are uplinking in the EVA 4 Preliminary Detail Timeline and a revised version of the Section 8 EVA 3 Deconfig / EVA 4 Reconfig procedure. It will repack the J bag with tools needed for a second battery temp stow, if required, but we are still looking at procedure options; you will need to gather a MUT EE from EVA Task Transfer Bag (s/n 1001) and a ballstack from A/L1O0_behind closeout; 1.0 CTB: MWS HDW, S/N 1013 (REPORT s/n) prior to Tool Config
- The camera can either go out on a crewmember or in the J bag if used

The stbd SARJ and the 2B BGA angles will be the same for EVA4 as they were in EVA3.

PET TI0. ME (HR : MIN)	EVA 4		
	IV/SSRMS	**EV1 – Cassidy (FF)**	**EV2 – Marshburn (FF)**
00:00	**(00:00-00:35)** SSRMS at WS 8 with ICC-VLD at P6	**EGRESS/SETUP** (00:35) ❑ Post Depress and Egress (00:15) ❑ Xlate to P6 (00:20)	**EGRESS/SETUP** (00:35) ❒ Post Depress and Egress (0:15) ❒ Xlate to P6 (00:20)
01:00	**(00:35-06:30)**	**P6 BATTERY R&R** () ❒ Setup (00:10) ❒ Remove Battery C, install into slot 3 (00:45)	**P6 BATTERY R&R** () ❒ Setup (00:10) ❒ Remove Battery C, install into slot 3 (00:45)
02:00		❒ Remove Battery 2, install into slot C (00:45)	❒ Remove Battery 2, install into slot C (00:45)
03:00		❒ Remove Battery D, install into slot 2 (00:45)	❒ Remove Battery D, install into slot 2 (00:45)
04:00		❒ Remove Battery 5, install into slot D (00:45)	❒ Remove Battery 5, install into slot D (00:45)
05:00		❒ Remove Battery E, install into slot 5 (00:45)	❒ Remove Battery E, install into slot 5 (00:45)
06:00		❒ Remove Battery 6, install into slot E (00:45)	❒ Remove Battery 6, install into slot E (00:45)
		❒ Remove Battery F, install into slot 6 (00:45)	❒ Remove Battery F, install into slot 6 (00:45)
	SSRMS mnvr ICC-VLD to P6 clear position	❒ Install temp stow battery 1 into Slot F (00:30)	❒ Install temp stow battery 1 into Slot F (00:30)
	(06:30-07:00)	**CLEANUP** (00:30)	**CLEANUP** (00:30)
07:00	**(07:00-07:30)** EVA Time 7:30	**INGRESS** (00:30)	**INGRESS** (00:30)

PRELIMINARY

20-0561 (MSG 077) MB COMFORT GLOVE ALTERATION

OBJECTIVE:

To alleviate prime glove pressure felt by EV3 post EVA2 by altering comfort gloves

NOTE
Take care to not cut the comfort glove.

EV3

1. Invert comfort glove to expose pad pocket.

2. Cut six tack points to remove square pocket and pad from comfort glove. Cut pocket and remove inner pad. Refer to Figure 1.

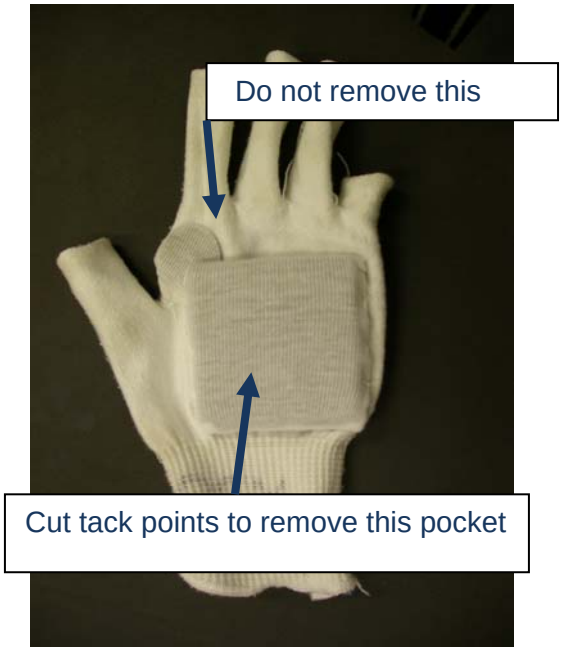

Figure 1. – Comfort Glove

3. Choose best option below

   3.1 Using the existing Mosite pad, trim approximately 1/4” from the edge that runs parallel to the side of your hand. Round corners.

   3.2 Obtain ¼” thick Mosite pad from EMU Comfort Patch kit. Cut this pad the same size as the removed pad. Round corners.

A/L1O1

4. Obtain moleskin from EMU Comfort Patch kit located in outer pocket of M-02 Bag s/n 1010.

5. Cut moleskin approximately 5” x 5”. Round corners. Refer to Figure 2.

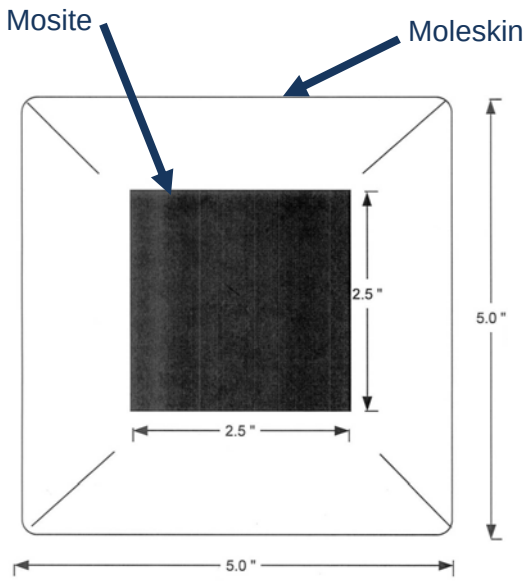

Not to scale

Mosite dimensions shown are prior to trimming

Figure 2. – Moleskin Dimension Details

6. Make approximately 1.5” diagonal cut in each corner of the moleskin.

7. Attach pad to back of hand using moleskin.