National Aeronautics and Space Administration

NASA Engineering Design Challenges

Thermal Protection Systems

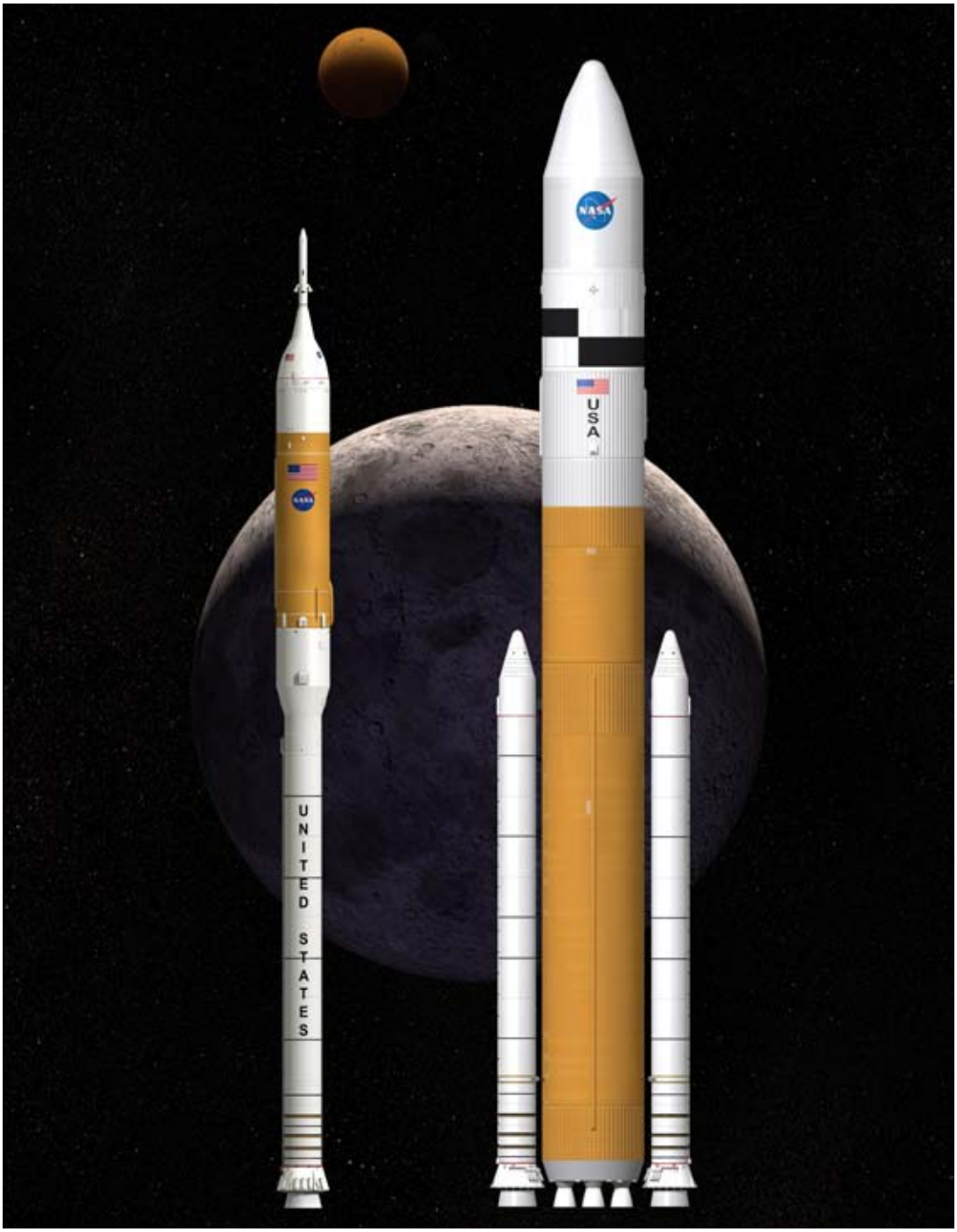

Educational Product	
Educators	Grades 6–9

EP-2009-06-116-MSFC

Cover Illustration:
NASA Ares I and Ares V Launch Vehicles
NASA artist conceptions.

Table of Contents

1. Overview 1
2. How to Use This Guide 3
3. National Science Education Standards 5
4. Math Connections 7
5. Thinking Skills 8
6. Background
   - The Ares Launch Vehicles 9
   - Thermal Protection Systems 10
   - Heat and Heat Transfer 15
7. Teacher Preparation
   - Required Materials 20
   - Build the Test Stand 21
   - Build the Test Assemblies 23
   - Practice the Test Procedure with Your Own TPS Designs 25
   - Prepare the Materials for the Classroom 27
   - Review Safety Procedures 28
   - Teaching Strategies for an Engineering Design Challenge 29
   - Helping Students Understand the Design Process 31
8. Classroom Sessions
   - Session 1: Introducing the Challenge and Getting Started 32
   - Session 2: Design 1: A TPS Made of Copper Screen 36
   - Session 3: Designs 2 and 3: TPS Made of Copper Screen 40
   - Session 4: Design 4: TPS Made of Copper Screen and Aluminum Foil 41
   - Session 5: Designs 5 and 6: TPS Made of Copper Screen and Aluminum Foil 43
   - Session 6: Construct a Storyboard/Poster 44
   - Session 7: Student Presentations 46
   - Linking Design Strategies and Observations to Science Concepts 47
9. Extensions 52
10. Detailed Materials List 54
11. Resources 57
12. Masters 59
   - Flier for Parents
   - Handouts/Transparencies
   - Recording Sheet

**The Ares Engineering Design Challenges use Traditional U.S. units of measure as the standard. Metric units follow in (parenthesis). In cases when a given formula is traditionally calculated in metric units, for mathematical correctness, it is presented in that manner.*

NOTE: The Ares vehicles are a very preliminary configuration and will be subject to change as the design progresses.

Authors
Nick Haddad, TERC
Harold McWilliams, TERC
Paul Wagoner, TERC

Subject Matter Experts & Reviewers
Bob Bender: MSFC, Spacecraft & Vehicle Systems Department, QUALIS
Jeff Finckenor: MSFC, Spacecraft & Vehicle Systems Department, NASA
Kristy Hill: MSFC, Academic Affairs Office, WILL Technology Inc.
Bill Pannell: MSFC, Spacecraft & Vehicle Systems Department, NASA
Twila Schneider: MSFC, Ares Projects Office, Schafer Corporation

Design and Layout
Sandra Schafer: Schafer LaCasse Design, Somerville, MA

Graphics
Ted Allbritton: MSFC, UNITeS Technical Publications & Illustrations, TRAX
Melissa Higdon: MSFC, UNITeS Technical Publications & Illustrations, TRAX

Ares I and V
NASA artist conceptions

Editor
Regina Garson: MSFC, Ares Projects Office, UNITeS

NASA explores for answers that power our future.
www.nasa.gov

NASA Engineering Design Challenges

Thermal Protection Systems

1. Overview

Space Transportation

NASA Engineers at Marshall Space Flight Center, and their partners at other NASA centers and in private industry, are designing and beginning to develop the next generation of spacecraft to transport cargo, equipment, and human explorers to space. These vehicles — the Ares I and Ares V launch vehicles — are part of the Constellation Program, which is carrying out a bold vision of human space exploration. The program also includes a crew exploration vehicle. The NASA Authorization Act of 2005 directs NASA to establish a program to develop a sustained human presence on the Moon, which will serve as a stepping stone to further exploration of Mars and other destinations. This design challenge focuses on the Ares family of launch vehicles, which will replace the Space Shuttle orbiter in the task of putting people, satellites, and scientific experiments into space.

Connect to Engineering and Science

The Engineering Design Challenges connect students with the work of NASA engineers by engaging them in related design challenges of their own. With some simple and inexpensive materials, you can lead an exciting unit that focuses on a specific problem that NASA engineers must solve and the process they use to solve it. In the classroom, students design, build, test, and revise their own solutions to problems that share fundamental science and engineering issues with the challenges facing NASA engineers.

The Design Challenge

You will present students with a challenge: build a structure from aluminum foil and copper screening that will protect a model of the Ares launch vehicles from the heat of a propane torch for as long as possible. Students first measure the “protection time” of an unprotected model. Then they design, build, test, and revise their own thermal protection systems. They document their designs with sketches and written descriptions. As a culmination, students compile their results into a poster and present them to the class.

Materials

You will need a few simple and inexpensive materials:

- A propane torch.
- Copper, aluminum, or brass screening.
- Aluminum foil.
- Wooden dowels.
- Hot melt glue pot or glue gun and glue.
- Brass machine screws, nuts, and washers.
- Plywood.
- Poster paper.
- Markers.
- Safety goggles.
- Ring stand and clamps.
- Fire extinguisher.

Time Required

The design challenge can be completed in seven 45-minute class periods. This could easily be extended for twice that long. Ideas for extensions, further exploration, and extra enrichment activities for more motivated and/or advanced students are included at the end of the guide.

You will need to invest 4 to 8 hours gathering the materials, building the test stand, trying out your own designs, reading the guide, and preparing the classroom.

Value to Students

These activities help students achieve national standards in science, math, and critical thinking skills. In the pilot testing of the design challenge, students embraced the design challenge with excitement. The value of this activity to your students is the opportunity to solve a challenge based on a real-world problem that is actually a part of the space program and to use creativity, cleverness, and scientific knowledge to do so. Students have many opportunities to learn about heat and heat transfer during the activities. The culminating activity gives students an opportunity to develop their presentation and communication skills.

Student Research Opportunities

The "Resources" section of this guide includes numerous online resources where students can obtain additional information.

Parent Involvement

The "Masters" section of this guide includes a reproducible flier to send home to inform parents about the activity and includes suggested activities students and parents can do at home together.

Safety

These activities meet accepted standards for laboratory science safety.

2. How to Use This Guide

The rest of this guide is divided into these sections:

3. National Science Education Standards.
4. Math Connections.
5. Thinking Skills.
6. Background Material.
7. Preparation for the Challenge.
8. Day-by-day Procedures.
9. Extensions.
10. Detailed Materials List.
11. Resources.
12. Masters.

National Standards

If you have questions about how this activity supports the National Science Education Standards, math connections, and thinking skills, read Sections 3, 4, and 5. Otherwise, refer to those sections as you need them.

Suggested Order of Reading

First, skim through the entire guide to see what is included.

Next, read through the Classroom Sessions that describe what happens in each of the seven sessions. Give special attention to the last part: "Linking Design Strategies and Observations to Science Concepts," on Page 47. This gives explicit suggestions on how to help students understand the science in their designs. Review this section again when you start classroom work with your students.

Be sure to read the last two parts of the "Teacher Preparation" section: "Teaching Strategies for an Engineering Design Challenge," and "Helping Students Understand the Design Process," beginning on Page 29. These will help you understand what is distinctive about an Engineering Design Challenge and how your students can get the most out of it.

When you understand the session-by-session flow and the pedagogical approach on which it is based, read the "Background" section, beginning on Page 9. This will provide you with information you will want to have in mind to "set the stage" for students and to link their classroom work with the work of NASA engineers. It focuses on one of the challenges faced by NASA engineers in developing thermal protection systems (TPS) that will protect the Ares launch vehicles from the heat of speeding through the atmosphere and the intense heat of their own engines. You will find information here about thermal protection systems in general, and about the challenges that NASA engineers face in protecting the Ares launch vehicles from heat. An overview of the concepts of heat and heat transfer can be found on Page 15.

Further resources for you and your students can be found in the "Resources" section on Page 57.

The reproducible masters you need are in the "Masters" section at the back of the book.

Finally, read the remainder of the "Teacher Preparation" section to find out how to prepare your classroom and yourself to conduct the Engineering Design Challenge. It contains safety guidelines, lists of materials, suggestions for organizing the classroom, and teaching techniques.

3. National Science Education Standards

This Engineering Design Challenge supports the following Content Standards from the National Research Council's National Science Education Standards.

Science as Inquiry

All students should develop abilities necessary to do scientific inquiry.

Fundamental abilities and concepts:

- Students should develop general abilities, such as systematic observation, making accurate measurements, and identifying and controlling variables.
- Students should use appropriate tools and techniques, including mathematics, to gather, analyze, and interpret data.
- Students should base their explanation on what they observed: providing causes for effects and establishing relationships based on evidence.
- Students should think critically about evidence, deciding what evidence should be used and accounting for anomalous data.
- Students should begin to state some explanations in terms of the relationship between two or more variables.
- Students should develop the ability to listen to and respect the explanations proposed by other students.
- Students should become competent at communicating experimental methods, following instructions, describing observations, summarizing the results of other groups, and telling other students about investigations and explanations.
- Students should use mathematics in all aspects of scientific inquiry.
- Mathematics is important in all aspects of scientific inquiry.
- Technology used to gather data enhances accuracy and allows scientists to analyze and quantify results of investigations.
- Scientific explanations emphasize evidence.
- Scientific investigations sometimes generate new procedures for investigation or develop new technologies to improve the collection of data.

Students respond positively to the practical, outcome orientation of design problems before they are able to engage in the abstract, theoretical nature of many scientific inquiries.

–National Science Education Standards, National Research Council

Complete text of the National Science Education Standards
http://books.nap.edu/openbook.php?isbn=0309053269

Complete text of Benchmarks for Science Literacy
http://www.project2061.org/publications/bsl/online/ch1/ch1.htm

Physical Science

All students should develop an understanding of transfer of energy.

Fundamental concepts and principles:

- Energy is a property of many substances and is associated with heat and light.
- Heat moves in predictable ways, flowing from warmer objects to cooler ones, until both reach the same temperature.

Through design and technology projects, students can engage in problem-solving related to a wide range of real-world contexts. By undertaking design projects, students can encounter technology issues even though they cannot define technology. They should have their attention called to the use of tools and instruments in science and the use of practical knowledge to solve problems before the underlying concepts are understood.

–Benchmarks for Science Literacy, American Association for the Advancement of Science (AAAS)

Science and Technology

All students should develop abilities of technological design.

Fundamental concepts and principles:

1. Design a solution or product
   - Consider constraints.
   - Communicate ideas with drawings and simple models.
2. Implement a design
   - Organize materials.
   - Plan work.
   - Work as collaborative group.
   - Use suitable tools and techniques.
   - Use appropriate measurement methods.
3. Evaluate the design
   - Consider factors affecting acceptability and suitability.
   - Develop measures of quality.
   - Suggest improvements.
   - Try modifications.
   - Communicate the process of design.
   - Identify stages of problem identification, solution design, implementation, evaluation.

Criteria

The challenge satisfies the following criteria for suitable design tasks:

- Well defined, not confusing.
- Based on contexts immediately familiar to students.
- Has only a few well-defined ways to solve the problem.
- Involves only one or two science ideas.
- Involves construction that can be readily accomplished by students without lengthy learning of new physical skills or time-consuming preparation or assembly.

Learning Objectives

All students should develop understandings about science and technology.

- Difference between scientific inquiry and technological design.
- Technological designs have constraints.
- Technologies cost, carry risks, provide benefits.
- Perfectly designed solutions do not exist; engineers build in back-up systems. Students respond positively to the practical, outcome orientation of design problems before they are able to engage in the abstract, theoretical nature of many scientific inquiries.

4. Math Connections

This Engineering Design Challenge offers the opportunity to integrate a variety of math skills described in the following table. Some of the applications listed are part of extension activities.

Skill	Application
Reading and writing time measurements	Recording protection times
Performing operations with decimal numbers	Protection time, size of TPS, quantities of materials
Rounding	Rounding protection time to the second, tenth of a second, etc.
Calculating averages	Calculating mean, median, mode, or range for multiple tests of the same design, for all designs by one team, or for the entire class
Graphing	Creating line graphs, bar graphs, circle graphs, or scatterplot of protection time
	Graphing protection time vs. mass of TPS
	Graphing protection time vs. size (width, length, diameter) of TPS
Measuring percentage improvement	Comparing designs by one team, calculating improvement for the entire class
Calculating ratios	Determining the relationship between the quantity of materials used and protection time: between the flame length and protection time
Using a budget	See the extension activity: Designing on a Budget

**The Ares Engineering Design Challenges use Traditional U.S. units of measure as the standard. Metric units follow in (parenthesis). In cases when a given formula is traditionally calculated in metric units, for mathematical correctness, it is presented in that manner.*

5. Thinking Skills

This Engineering Design Challenge provides an opportunity to assess students' development of critical thinking skills in a context in which these skills are applied throughout the task. Students are often asked to perform critical thinking tasks only after they have mastered such lower-level thinking skills as making simple inferences, organizing, and ranking. In this learning activity, various levels of thinking skills are integrated. The following rubric is designed to assist you in assessing students mastery of thinking skills.

Cognitive Memory Skills

1. Students accurately measure the protection time and compute the average time.
2. Students observe a design before testing and pick out the "key features."
3. Students observe a model during and after testing and document precisely what happens to the model.
4. Students record observations and organize data so that they can be exchanged with others and referred to later.

Structuring, Organizing, Relating Skills

5. Students can classify designs.
6. Students can rank designs according to various criteria, i.e., protection time, mass.
7. Students can create diagrams, charts and graphs of the results.
8. Students can visualize relationships such as part-whole, cause-effect.
9. Students can interpret such information as test results and design documentation.
10. Students can compare and contrast different design solutions.

Convergent and Generalizing Skills

11. Students can demonstrate that they understand the challenge.
12. Students can draw conclusions and generalize.
13. Students can converge on a solution by choosing from alternatives.

Divergent Thinking Skills

14. Students can apply ideas and concepts of heat transfer to their designs.
15. Students can make inferences and predictions about the performance of a design.
16. Students can invent and synthesize a solution.
17. Students can devise an experiment to test a particular theory.
18. Students can balance trade-offs between cost, quality, safety, efficiency, appearance, and time.

Evaluation Skills

19. Students can evaluate designs based on given criteria.
20. Students value new knowledge.

6. Background

The Ares Launch Vehicles

On July 20, 1969, Neil Armstrong and Buzz Aldrin became the first humans to set foot on the Moon. They arrived there in a lunar lander, which had been propelled into orbit around the Moon as part of the Apollo 11 space flight. NASA now has plans to return humans to the Moon and eventually to Mars. NASA is designing new spacecraft to carry them there. These spacecraft, the Orion crew exploration vehicle and the lunar lander, Altair, will be launched on the Ares launch vehicles.

NASA Engineers at Marshall Space Flight Center are currently developing the launch vehicles for the next generation of space travel. The Ares I launch vehicle will deliver the Orion crew vehicle into Earth orbit. Astronauts in Orion can than connect to the International Space Station or rendezvous with a rocket put into orbit by the Ares V launch vehicle, for transport to the Moon.

Ares I is a two-stage rocket. See Figure 6.1. The first stage is a reusable solid rocket booster (RSRB), similar to the RSRBs of the Space Shuttle. Its second stage is a liquid oxygen-liquid hydrogen engine similar to the upper stage engine of the Saturn V rocket, which propelled the Apollo missions to the Moon. Ares I will weigh about 2 million pounds (907 metric tons) at liftoff, will stand about 327 feet (100 meters) tall (more than a football field), and will deliver the Orion crew exploration vehicle to low Earth orbit (LEO).

Ares V also has two stages. See Figure 6.2. The core stage of Ares V is powered by two RSRBs and five liquid fuel engines working together to provide maximum thrust. The two RSRBs are separated from the vehicle at approximately 130 seconds into flight, while the five engine core stage will continue to burn for approximately 200 additional seconds before shutdown and separation. The second stage of Ares V is called the earth departure stage (EDS) and is powered by the same liquid fuel engine as Ares I. Ares V will weigh about 7.4 million pounds (3,357 metric tons) at liftoff, will stand 360 feet (110 meters) tall, and will carry about 314,000 pounds (142.4 metric tons) to LEO. Ares V will launch the EDS to LEO. While in LEO, the astronauts will dock with the EDS for their journey to the Moon.

Ares I will produce roughly 3.5 million pounds-force (15.7 meganewtons) of thrust at liftoff. The RSRB will burn for about 130 seconds. At the end of this burn, the rocket will be about 36 miles (58 kilometers) above Earth, traveling at a speed of 4,445 miles per hour (2,000 meters per second). The vehicle will have lost 69% of its weight by having burned nearly 1.4 million pounds (630 metric tons) of solid rocket fuel. The RSRB, no longer needed, will be jettisoned and will fall back in the Atlantic Ocean, where it will be recovered for reuse. The liquid fuel J-2X engine of the Ares I second stage will burn for about 464 seconds, producing 294,000 pounds-force (1.3 meganewtons) of thrust, to lift Orion to a higher orbit at 185 miles (298 kilometers) above the Earth. In this orbit, the vehicle will be traveling at about 17,500 miles per hour (7,800 meters per second).

Figure 6.1
Ares I

Figure 6.2
Ares V

Thermal Protection Systems

Different Sources of Heat

Aerospace engineers face different types of thermal protection challenges as they design spacecraft. One type occurs when a spacecraft moves through the atmosphere at extreme speeds, during both launch and re-entry to the atmosphere. Without proper thermal protection, atmospheric friction generates enough heat to damage or, during re-entry, even destroy a spacecraft.

A different type of challenge occurs in the vicinity of the engines during launch. Here, the fuel lines, electronic components, and structural elements in the base of the vehicle near the engines can be damaged or destroyed by the extreme heat in the exhaust plume of the engine. As the vehicle speeds through the atmosphere, plume to plume interactions or plume/free stream air interactions create high pressures that recirculate some of the hot plume gases forward toward the base. These hot gases are prohibited from entering the engine compartment by a heat shield across the base. This heat shield is a type of thermal protection system. In addition, a tremendous amount of heat from the plume of combustion gases is radiated back toward the area of the engines. This problem is particularly severe with solid rocket boosters, because those plumes are filled with hot particles that increase the amount of radiated heat.

How Thermal Protection Systems Work

To protect against the heat of friction, engineers use special insulating blankets, foams, and tiles on the skin of the spacecraft. The heat shield or thermal protection system (TPS), which protects against the heat from the engine exhaust plumes, is a more local system that is installed near the throat of the engine nozzles in the base of the vehicle.

Think of other heat protection “systems” you may have seen or used, such as a potholder, a thermal bottle, or a fireman’s special coat. These are doing the same job as the TPS on a spacecraft. Some of these, such as the potholder, provide local protection, which just needs to protect your hand from the hot handle of a baking dish. Others, such as a thermal bottle, protect the whole surface from absorbing heat or losing heat, depending on whether you have a cold drink or a hot drink in the bottle.

Different methods can be utilized to enable a TPS to keep heat from reaching the inside of the spacecraft. One method is to use a covering material that will absorb the heat and radiate it back into space, away from the spacecraft. All materials radiate heat when they get hot. You can feel this whenever you put your hand near something hot like a radiator, a hot stove, or the coals of a campfire. However, only certain materials can radiate heat so efficiently that the heat does not build up within the material and pass it into the spacecraft or possibly melt the body of the spacecraft.

Another way a TPS works is to let small bits of itself actually burn and fall away from the spacecraft. These materials neither absorb nor radiate much heat, so when the surface becomes very hot, the material starts to burn and erode. The term that describes this process of material being eroded by heat is ablation.

Keeping the Thermal Protection Lightweight

A launch vehicle's engines can lift a certain amount of weight into orbit. That weight is divided between two parts: the weight of the vehicle itself (including the fuel) and the weight of the passengers and the payload. The more the structure of the vehicle weighs, the fewer passengers and smaller payload it can carry (for a particular set of engines). Designers try to keep all the parts of the vehicle, including the thermal protection system, as light as possible so that more of the weight can be used for passengers and payload.

Ablative Thermal Protection System on Early Space Vehicles

Early manned spacecraft, such as Mercury, Gemini, and Apollo, re-entered the atmosphere large end first. From their orbital speed of more than 17,000 miles per hour (7,600 meters per second), re-entry into the atmosphere generated a tremendous amount of heat from friction. For thermal protection, the large circular ends of these spacecraft were covered with an ablative TPS material that came off in tiny pieces when it burned. See Figure 6.3. Each little bit of the thermal protection system that flew away from the moving spacecraft took some heat energy with it. This system prevented most of the heat from getting into the vehicle, but the crew compartment still got quite warm during re-entry.

It did not matter so much that the ablative TPS material used on these capsules was heavy because the engines of those early rockets had more than enough thrust to launch those small spacecraft. It also did not matter that the thermal protection burned away during re-entry because those spacecraft were only used once. They were disposable rather than reusable.

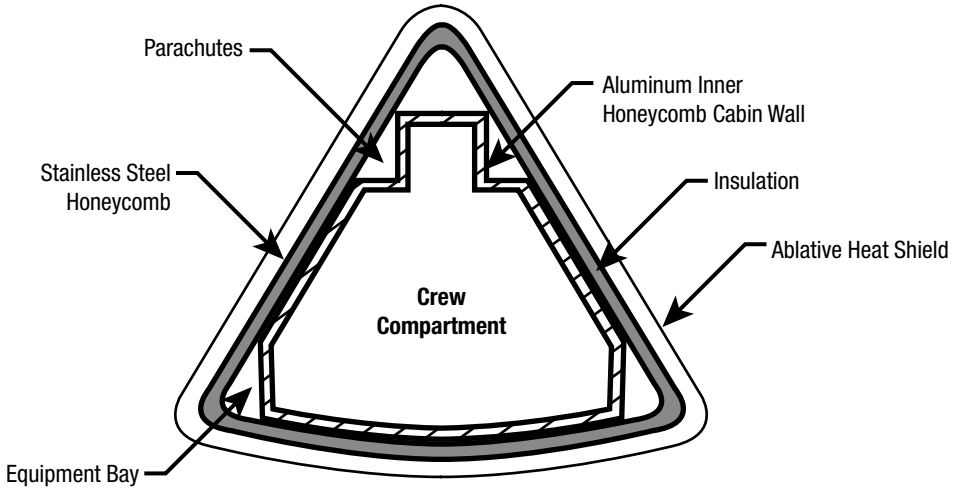

Figure 6.3. Thermal protection system in early manned spacecraft.

Radiant Thermal Protection System on the Space Shuttle

The Space Shuttle orbiter was the first space vehicle designed to be used many times. A heavy thermal protection system that came off during re-entry would not work. The Space Shuttle, which is dramatically larger than the early single-use spacecraft, needed a thermal protection system that was lightweight and reusable.

NASA selected four thermal protective materials for the original Space Shuttle, *Columbia*. The materials were Reinforced Carbon-Carbon (RCC), two kinds of silica tiles, and felt blankets. Designers later replaced the original materials with better tiles and blankets made from new materials that were stronger and less expensive.

The Shuttle's nose cone and the front edges of its wings heat up the most during re-entry. When the Shuttle is at its hottest, temperatures on these surfaces reach as high as 3,000°F (1,649°C). A product called RCC protects the orbiter's nose and wing leading edges from the highest temperatures. RCC is a combination of materials called a composite. To make RCC, graphite cloth is saturated with a special resin. Next, layers of the cloth are combined and allowed to harden. Finally they are heated to a very high temperature to convert the resin into carbon.

Most of the windward (toward the air flow) surfaces and the base region of the orbiter are protected from heat by silica fiber tiles. There are two kinds of tiles. The high temperature tiles protect areas where temperatures reach up to 2,300°F (1,260°C). These tiles have a black surface coating. The low temperature tiles protect areas where temperatures stay below 1,200°F (650°C). These tiles have a white surface coating.

There are approximately 24,300 tiles on the outside of each orbiter. The tiles dissipate heat so quickly that you could hold a tile by its corners with your bare hand only seconds after taking it out of a 2,300°F (1,260°C) oven even while the center of the tile still glows red with heat. To make the tiles, engineers start with fibers of pure white silica and mix the fibers with water and other chemicals. They then pour the mixture into molds. The tiles are dried in the nation's largest microwave oven, then they are baked in another oven at 2,350°F (1,288°C). Finally, the tiles are glazed, coated, and waterproofed.

Some of the leeward (away from the air flow) upper surfaces on the orbiter are protected by flexible insulation blankets. There are 2,300 flexible insulation blankets on the outside of each orbiter. These blankets look like thick quilts. They are made of silica felt between two layers of glass cloth sewn together with silica thread. The blankets are more durable and cost less to make and install than the tiles. The blankets protect areas where temperatures stay below 1,200°F (650°C).

The tiles and insulation blankets are bonded to the orbiter with room-temperature vulcanizing (RTV) adhesive. The adhesive will withstand temperatures as high as 550°F (288°C), and as low as -250°F (-157°C) without losing its bond strength.

Thermal Protection for the Ares V Launch Vehicle

As mentioned above, Ares V will weigh about 7.4 million pounds (3,357 metric tons) at liftoff. To lift that much weight off the launch pad and accelerate it to a speed of 4,474 miles per hour (2,000 meters per second) requires a huge amount of energy, and that energy comes from the combustion of fuel in two RSRBs and five liquid fuel engines. If you have seen an image of a Space Shuttle launch, maybe you can imagine the extraordinary heat that is generated in the vicinity of the engines. See Figure 6.4.

Figure 6.4. Shuttle Launch. A larger version of this image is included in the "Masters" section at the end of this guide.

To protect the fuel lines, the thrust structure (to which the engines are attached), and electronic components near the base of Ares V, from the heat of launch and from the swirling hot gases during flight, engineers are developing some surprising solutions. A base heat shield with an ablative TPS external coating in the form of a layer of cork just 0.625 inch (1.6 centimeters) thick will provide most of the protection. The cork is bonded to an aluminum-lithium backing plate that provides support for the cork. The special adhesive that bonds the cork to the backing plate can withstand the extreme temperatures in that area. The cork will ablate, or slowly burn away in small pieces, releasing the heat that accumulates. See Figure 6.5.

Ares V will also need protection from aerodynamic heating (atmospheric friction) during ascent. Both the core stage and EDS of the Ares V are not reusable and are allowed to break up during re-entry, so they do not require extensive TPS for the re-entry phase. About 1 inch (2.54 centimeters) of insulating foam that can withstand temperatures in excess of 2,000°F (1,093°C) will be sprayed onto the surfaces. In addition, areas at the front of the launch vehicle, which will experience temperatures of over 3,000°F (1,649°C) from frictional heating, parts that stick out from the skin, and areas close to the engines, will get a layer of ablative material made from a mixture of silicone resins and cork.

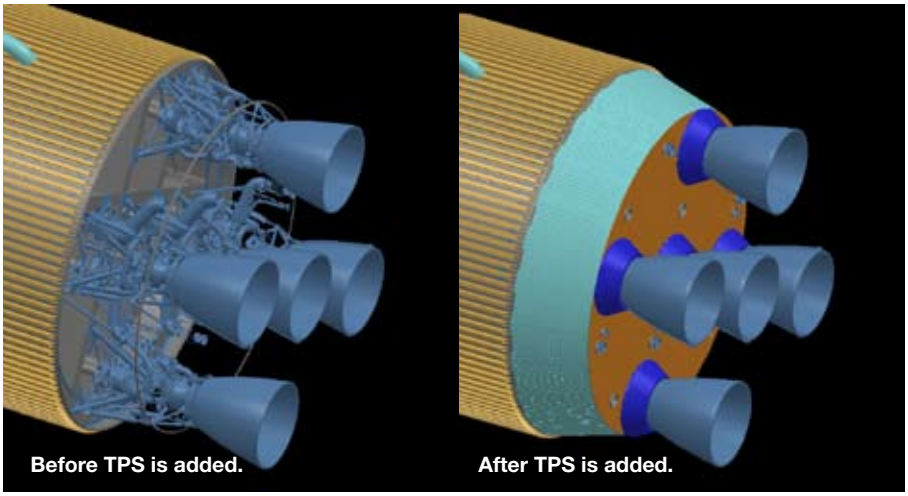

Figure 6.5. Ares V TPS at base. A larger version of this image is included in the "Masters" section at the end of this guide.

Thermal Protection for the Ares I Launch Vehicle

Engineers are also designing thermal protection systems to protect the Ares I launch vehicle, but the challenges they face are not as significant as for the Ares V. The first stage of the Ares I launch vehicle is a solid rocket booster. The nozzle of the booster will be made of RCC. The space between the nozzle and the adjacent flared section of the booster will be filled with a donut-shaped flexible thermal curtain to protect electronic components in that area from radiated heat and from hot swirling gases that are drawn into that low-pressure area. There will also be a 6-inch (15.24-centimeter) layer of protective foam around the perimeter of the donut-shaped thermal curtain.

The upper stage of Ares I, which uses liquid fuel, will have a single engine. The body of Ares I will be coated with insulating foam and will have ablative materials on the parts that protrude from the skin. The Orion crew exploration vehicle and launch abort system, which are attached above the upper stage, have special localized TPS in areas around the nose and around the small pods that house the reaction control system thrusters. This localized TPS does not significantly affect the weight or complexity of the vehicle.

Heat and Heat Transfer

This unit provides an opportunity for you to introduce or reinforce concepts of heat and how heat moves. Students should be able to:

- Identify the direction in which heat flows.
- Explain how conduction, convection, and radiation differ.
- Identify factors that determine the conduction rate of heat through a solid.
- Identify several materials that are good conductors and several materials that are good insulators.
- Describe radiation, absorption, and reflection in terms of radiant heat.

Heat is a form of energy. Heat always flows from a hotter place to a cooler place. The hotter place is sometimes called a heat source and the cooler place is sometimes called a heat sink. Heat transfer occurs in three ways:

Joule = amount of energy required to raise a 100g mass 1 meter.

Watt = a measurement of power; 1 watt = 1 joule/second.

If you hold your hand up to the sun, your hand will receive about 10 watts of energy on a clear, sunny day.

A square meter of the Earth's surface receives 1,000 watts from the sun.

1. Conduction

Heat moves by conduction when it flows through a solid substance or when heat flows between solid substances that are in direct contact. For example, when you touch your hand to a cold water pipe, heat flows from your hand to the pipe by conduction. Two solid surfaces at different temperatures are in contact. Heat is transferred by conduction.

Materials that conduct heat well are called thermal conductors, while those that conduct heat poorly are called thermal insulators. Metals are good conductors while wood, glass, cork, ceramic, and plastic foam are good insulators. Air is an insulator. Small pockets of air in wool, fur, and feathers keep heat from passing through, making these materials good insulators. Air spaces are also used to insulate buildings—for example, between double pane windows.

2. Convection

Heat moves by convection when it flows through a liquid or gas because the liquid or gas particles move. In the winter when you feel a draft coming off a cold window, you are feeling a convection current of air. When a "warm front" of weather moves in, the warmth is brought by trillions of hot molecules of air traveling across the Earth in a huge convective stream. When you see "heat" rising over a radiator or over any hot surface, you are seeing a convective current of warm air.

3. Radiation

Heat moves by radiation when it flows through empty space or a transparent medium without heating the space or the medium. Heat reaches Earth from the Sun by means of radiation. When you feel the heat of glowing coals or of a hot wood stove, you are feeling radiated heat. Radiated heat travels as electromagnetic waves. Most of the thermal energy is in the infrared portion of the spectrum, which is not visible.

Thermal Conductivity and Heat Capacity

One of the things that students discover in this activity is that materials react differently to heat. Some materials readily conduct heat. They have high thermal conductivity and are good thermal conductors. Thermal conductivity refers to the ability of a material to transmit heat by conduction. Materials that have low thermal conductivity make good thermal insulators. In the TPS models, both copper and aluminum are good thermal conductors, though copper is almost twice as conductive as aluminum. (See first column in table below.)

Some materials absorb a lot of heat without heating up very much themselves. They have a high thermal capacity, or specific heat. Materials that have a high specific heat make good heat sinks.

Thermal Conductivities and Specific Heats of Materials

	Thermal Conductivity	**Specific Heat**
Substance	(Joules/s × m × °C)	(kcal/g × °C)
Silver	420	56
Copper	380	93
Aluminum	200	220
Steel	40	
Glass	0.84	200
Brick and concrete	0.84	
Water	0.56	1,000
Human tissue without blood	0.2	830
Asbestos	0.16	
Wood	0.12	400
Cork and glass wool	0.042	
Down	0.025	
Air	0.023	

Source: *Principles with Applications*, 2nd edition, Douglas C. Giancoli Englewood Cliffs, NJ: Prentice Hall, 1994 p. 260

What's the Difference?

These two terms, thermal conductivity and heat capacity, are easily confused. However, it is important to understand the difference. One describes how readily a material transports heat internally; the other describes the heat-holding capacity of a material.

Students will sometimes think that a good conductor is also a good heat sink. This is not necessarily so. For example, consider water. Water has a very high specific heat, but only modest thermal conductivity. Similarly, compare silver and aluminum. Silver has more than double the thermal conductivity of aluminum, but has only 1/4 the specific heat. So, gram for gram, silver would make a better thermal conductor and aluminum would make a better heat sink.

Thermal Conductivity and the TPS

In designing and testing their TPS models, students may talk about the TPS "absorbing heat," "conducting heat," and "storing heat." When they do so, you can lead the discussion in a more precise direction by introducing the ideas of thermal conductivity and specific heat and referring to the table on Page 16.

Students also learn that they want to avoid conducting heat from the flame to the glue joint. They learn through experience that attaching copper or aluminum foil directly to the brass screw will provide a good conduction path for the heat to reach the glue. In contrast, if they introduce an air gap in the conduction path, air, which is a good insulator, will impede the flow of heat to the screw. The table on Page 16 shows how this makes sense: air, like down, has a very low thermal conductivity, while copper and aluminum have high conductivities.

Specific Heat and the TPS

Students may speak of their TPS model functioning as a "heat sink." Whether it does so, in fact, depends on both the nature of the material and the mass of material involved. In fact, the mass of copper screen and aluminum foil used is so small that the ability of the materials themselves to absorb and hold heat is fairly minimal. Nonetheless, the idea of a heat sink provides an opportunity to discuss specific heat. Here is a more precise explanation of specific heat.

Specific heat refers to the quantity of thermal energy a given mass of material must absorb in order to increase its temperature a given amount. Typically, this is indicated as the number of kilocalories needed to raise the temperature of one kilogram of the material by one degree Celsius. (The table on Page 16, as noted, uses kilocalories/gram × °C.) For example, it takes one calorie (4.184 joules) of heat energy to raise the temperature of one gram of water 1°C. The heat capacity of water is 1.0 cal/g°C. The specific heat of a material is a measure of how well it will function as a "heat sink." The table shows that aluminum has about 2.5 times the heat-absorbing capacity of copper, and, therefore, would make a better heat sink. It must absorb nearly 2.5 times the heat energy as the same mass of copper before its temperature increases 1.0°C.

As an exercise, you could have students measure the mass of the copper screen and the aluminum foil and, using their respective specific heats, calculate which would make the better heat sink. The "heat absorbing capacity" of a given mass is proportional to its mass times its specific heat, so:

The heat absorbing capacity of a given amount of material = $m \times c$

Where m = the mass of material

c = the specific heat of the material

If a TPS contained 4 grams of copper, its heat absorbing capacity would be

$$4\ g \times 93\ kcal/g \times °C = 372\ kcal / °C$$

which means that the copper would absorb 372 kilocalories for each 1.0°C increase of temperature. If it rose in temperature by 10°, it would absorb 3,720 kilocalories of energy.

Review Questions for Class Discussion or Homework

1. What are two sources of heat that NASA engineers are protecting against?

2. Name two different approaches to providing thermal protection. Explain how each type works.

3. Name the common, lightweight material that NASA engineers are planning to use to provide thermal protection at the base of Ares V. Describe how this material provides thermal protection.

4. Name the three ways in which heat is transferred, and describe how heat is transferred in each situation.

5. Identify a material that has low thermal conductivity and a material that has high thermal conductivity.

6. Describe the term “specific heat.”

Answers to Review Questions

1. Heat from friction between the atmosphere and the speeding spacecraft; heat from the combustion of fuel.

2. Radiation and ablation. Materials that protect by radiation radiate heat very efficiently. As soon as they start to absorb heat they release it very efficiently. They also have a high thermal capacity; they can absorb a lot of heat without heating up very much themselves.

   Materials that protect by ablation do not absorb or conduct heat very well. Heat erodes them; their surfaces burn and fall away, carrying heat away from the spacecraft.

3. NASA engineers are planning to use a 0.625 inch layer of cork at the base of Ares V. It will provide thermal protection by ablation.

4. Heat is transferred by conduction, convection, and radiation.

   Conduction involves heat moving through a solid substance. Substances must be in direct contact to transfer heat by conduction.

   Convection involves the transfer of heat by a liquid or by gas molecules. When a radiator gets hot and heats the air around it, that rising hot air is transferring heat up to the ceiling by convection.

   Radiation involves heat traveling as electromagnetic waves. Heat can radiate through space, as does heat from the sun.

5. Wood is one material that has low thermal conductivity, and does not conduct heat very well. Other common materials that have low thermal conductivity are air, cork, glass, and water. (See table on Page 16 for other examples.)

   Copper is one material that has high thermal conductivity. It conducts heat very well. Other materials that have high thermal conductivity include silver, aluminum, and steel.

6. Specific heat describes the relationship between how much heat a material absorbs and how much the temperature of that material increases. A material that can absorb a lot of heat without becoming very hot itself has a high specific heat. Water has high specific heat. Silver has low specific heat. (See table on Page 16 for other examples.)

7. Teacher Preparation

In order to prepare yourself and your classroom for this Engineering Design Challenge, you should:

- Use the "Background Information" section of this guide, as well as the Engineering Design Challenge Web site at http://edc.nasa.gov to familiarize yourself with the thermal protection systems used by NASA and the science and engineering concepts you will be introducing.
- Read through the day-by-day activities in the following section of this guide.
- Gather the required materials.
- Build the test stand.
- Build the test assemblies.
- Practice the test procedure with your own TPS designs.
- Prepare the materials for the classroom.
- Set up the classroom.
- Organize students in teams.
- Review safety procedures.
- Notify parents using the flier included in the back of the guide.

Required Materials

You can find complete details about sources, cost, and suitable replacements for materials in the Detailed Materials List on Pages 54-56 of this guide.

Required Materials	Approximate Cost Per Unit	Minimum Quantity for a Few Teams (60 test assemblies)	Recommended Quantity for 12–15 Teams (120 test assemblies)	Add for Each Additional Team (10 test assemblies)
Propane Torch	$11.00	1	1 (and a spare tank)	0
Test Stand (See instructions on Pages 21-23.)		1	1	0
Hot-Melt Glue Pot (Glue gun)	$10.00	1	1 and a spare	0
Hot-Melt Glue	$0.15-$0.50	6 sticks	12 sticks	1 stick
Birch Dowels (1/4-inch diameter, 3-feet long)	$0.30	4	15	1
Brass Pan Head Phillips Machine Screws (6-32 × 1 inch)	$0.06	100	200	10
Brass Hex Nuts (6-32)	$0.03	100	300	20
Brass Flat Washers (#6)	$0.02	100	300	20
Copper Woven Wire Cloth (screen wire)	$2.00-$4.00/sq. ft.	3 sq. ft. (0.3 m^2)	6 sq. ft. (0.6 m^2)	.6 sq. in. (0.05 m^2)
Aluminum Foil	$0.04/sq. ft	25 sq. ft. (2.3 m^2)	75 sq. ft. (7 m^2)	6 sq. ft. (0.6 m^2)

Build the Test Stand

The test stand contributes to the safety and accuracy of the tests. It holds the torch fixed in position and makes it easy to position the model correctly by sliding a ring stand until it hits a stop. It also protects the table top against hot material falling from the model. See Figure 7.1.

Materials Needed

- A propane torch and a spare propane bottle.
- A ring stand with a rectangular base and additional clamps to hold the test assembly in position.
- A piece of 3/4-inch plywood anywhere from 14 by 22 inches (35.6 by 55.9 centimeters) to 20 by 36 inches (50.8 by 91.4 centimeters). (This is the base board. 16 by 28 inches (40.6 by 71.1 centimeters) is recommended.)
- Two 1 by 2 (actual dimension 3/4 by 1-1/2) wooden boards, one piece 18 to 24 inches (45.7 to 61 centimeters) long and another piece 2 to 6 inches (5.1 to 15.2 centimeters) long.
- Two to four right-angle metal brackets 2 inches (5.1 centimeters) long.
- Screws for attaching the brackets and 1 by 2s to the base board.
- Tape to attach the torch to the brackets.
- Several 4-inch (10.2-centimeter) long pieces of 1/4-inch diameter wooden dowel.
- Aluminum foil.
- Optional: a piece of insulating firebrick and some furnace cement.

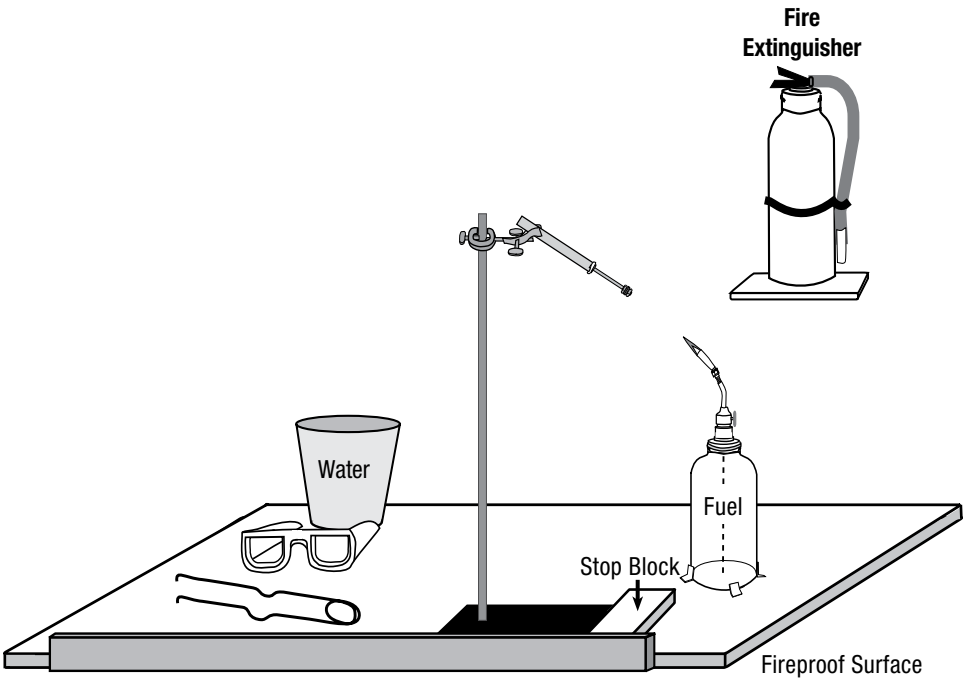

Figure 7.1. The test station.

A Note on Materials

Three-fourths-inch plywood is generally easily available and makes a good material for the base board. Three-fourths-inch plywood is thick enough that small screws can be driven into it without sticking out the bottom surface. Thinner plywood could be used, but different means would need to be used for attachment. For example, carefully countersunk flat head screws could go through the bottom of thinner plywood into the 1 by 2 wood blocks and, attached the same way, could hold the torch.

How it Works

To test a model, you will load it onto the ring stand away from the flame. The model should be supported by the familiar ring-stand combination of clamps and rods. Then you will place the base of the ring-stand against a small board or other guide, and slide it toward the flame until the base hits a stop. This is a quick and safe way to move the model into the test position, and there is even an audible "thunk" that makes a good signal to begin timing. As soon as the test is completed, slide the ring-stand away from the flame and prepare it for the next test.

It is important for safety that the torch remains fixed in position. The teacher lights the torch and extinguishes it after testing, but it stays attached to a base board at all times. This also ensures that the flame is always in the same place, which simplifies placing the models in exactly the right position for each test—simply loosen the clamp, remove the tested model and insert the next one.

Simple Construction

Begin by setting up the torch (do not light it yet) and the ring stand on the base board. Use ring-stand hardware to hold the 4-inch (10-centimeter) dowel (simulating the length of the test assembly), so the tip is 4 inches (10 centimeters) from the torch nozzle. The angle of the dowel should match the angle of the torch nozzle. You will want to be able to place each subsequent test assembly in the clamp just the same way. To make this easier, line up the top end of the dowel with some feature on the clamp that holds it. For example, you might want to make the end of the dowel flush with the top edge of the clamp. Tighten all the clamp screws securely (except the one holding the dowel) so they do not slip.

Next, consider where to place the guide for sliding the ring stand base. It should be attached to (or near) the long edge of the board, and a long side of the rectangular ring stand base should align with it. If you are using a tripod base, two feet of the tripod should rest against the guide. (You may need to rotate the test assembly holder around the vertical rod to line it up with the base.) Looking at the test stand as shown in the drawing, position the center of the torch fuel bottle about 6 inches (15.2 centimeters) from the right edge of the base board, and find the correct distance from the near edge so that the torch and the test assembly line up properly. Verify that you can slide the ring stand about a foot or so (30.5 centimeters) away from the torch, while keeping the base against the guide, and that the base slides smoothly back into position. Use a pencil to mark the position of the fuel bottle, the guide board, and the ring stand base.

Attach the guide board to the base board. Next use the brackets to locate the fuel bottle where it belongs. Simple right-angle brackets sold in hardware stores usually come with mounting screws short enough to screw into 3/4-inch thick wood.

In order to work out the final details of the test stand, including positioning the stop block, you will need to light the torch and make sure the hottest part of the gas leaving the flame directly hits the test assembly. Use some aluminum foil to protect the end of the 4-inch (10-centimeter) long dowel from the flame. See Figure 7.2. You can simply press a ball of crumpled foil onto the end of the dowel as long as you can tell from looking at the foil where the center line of the dowel would come through. When you put this "alignment fixture" in the flame, the hottest part will glow red. You will want to adjust the ring stand so that the dowel is directly in line with the hottest part. The foil will not withstand the flame for long, so slide the ring stand into place, take a look, slide it away, make an adjustment, and try again. (If you have a good supply of 4-inch (10-centimeter) long dowels, you could try using them without any protection, and look from different angles to see whether the hot gases from the flame are hitting them directly on the end. However, they will smoke and burn after only a few seconds of exposure.) When you have found the right alignment for the model, leave the ring stand in place, turn off the torch, and mark the location of the ring stand base. Tape the torch to the brackets so that it will not rotate. Attach the stop block so that you can easily slide the ring stand to the precise position you just found.

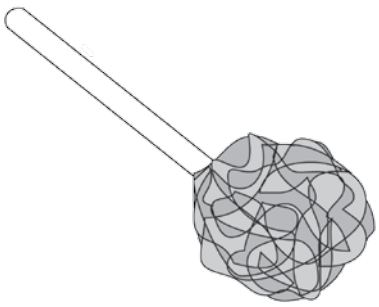

Figure 7.2. An aluminum foil ball on a dowel used to align the test stand.

Build the Test Assemblies

With some experience, it is quick and easy to build test assemblies. See Figure 7.3.

Materials Needed

- Screws, 6-32 machine screws, 1-inch long.
- 3-inch (7.6-centimeter) long pieces of 1/4-inch diameter wooden dowel.
- Low-temperature hot-melt glue. (Dual-temperature glue may also be used, but low-temperature is preferred.)
- Glue pot. (A glue gun may also be used, but the pot is preferred.)
- A way to hold the dowels vertical as the glue cools. (See below.)

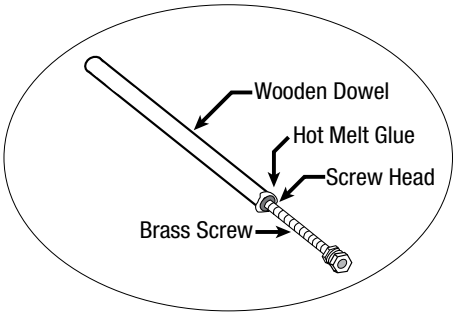

Figure 7.3. The TPS test assembly. A larger version of this image is included in the "Masters" section at the end of this guide.

Using Hot-Melt Glue

Hot-melt glue is widely used in classrooms, and it is fun to work with. Low temperature glue is preferred because it is less likely to cause burns, and it makes for a better Thermal Protection Challenge. In this activity, hot-melt glue is used only to build the test assemblies by attaching the metal screw to the wooden dowel. It is not an appropriate material for use in the students' TPS designs because it melts easily and can burn when exposed to the flame.

Attaching the Screw to the Dowel

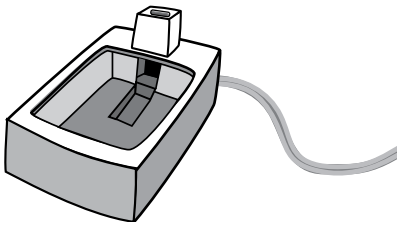

Figure 7.4. Glue pot.

The glue pot is recommended because it makes it easy to use hot-melt glue with the metal screw. See Figure 7.4. When hot-melt glue is first applied to the screw, it does not stick, because the screw is relatively cold and very conductive, so it cools the glue, which then loses its stickiness. Hold the screw with the head slightly dipped into the glue pot for about 10 seconds. The screw will warm up, and the glue will stick. Then you can press the head of the screw (with the clinging glue) onto the dowel and hold it for a few more seconds as the glue hardens. It will not take long to learn how much to let the screw warm up before pressing it against the dowel. If you heat the screw too much, it will be too hot to handle comfortably, but effective gluing will occur at lower temperatures.

It is helpful to have a way to put down the test assembly in a vertical position so the screw stays straight as the glue continues to cool. You might use a block of foam or wood with a dozen or more vertical holes, a container of sand, or some other arrangement.

The glue pot will work best with only a small amount of glue in it. It is fun to put more in, but you will get the best results if the glue puddle is so shallow that you can touch the head of the screw on the bottom of the glue pot without glue running onto the back of the head.

After you have made a few test assemblies, let them cool thoroughly and check to see whether they are strong enough to withstand normal handling. They are not strong, but they should not fall apart easily. Students will learn how carefully to handle them by breaking a few as they begin to work with them, but those can easily be replaced. Students can also learn to make the test assemblies, and you will probably prefer to have a few students make more of them so that you always have plenty on hand. It is probably not a good idea to expect all of the students to make the test assemblies—there is a knack to making them, and once a few people have learned to do it right, they can keep everyone supplied.

Using a Glue Gun to Attach the Screws to the Dowel

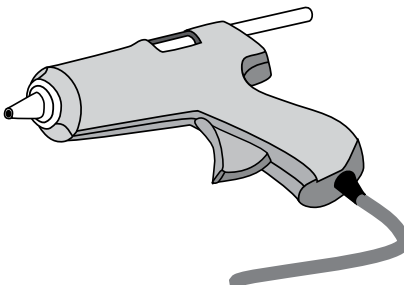

Figure 7.5. Glue gun.

It is a little more complicated to use a glue gun, but still practical. See Figure 7.5. Depending on the design of your glue gun, you might find that it is satisfactory merely to hold the head of the screw against the tip of the glue gun to allow the screw to warm for a few seconds before squeezing a small amount of glue onto it. It may work better to hold the head of the screw over a candle flame for a few seconds before applying the glue. (Hold the screw just above the flame for best heating. This also avoids soot.) Still air will make the candle technique work better. For adult use, the propane torch could be set to a very low flame, and the screw head warmed very briefly. It is very easy to overheat the screw using this method, so it is not recommended for student use.

Practice the Test Procedure with Your Own TPS Designs

Once you have built the test stand, you will want to try some models yourself to become familiar with adjusting the stand and assuring consistent test conditions.

Adjust the Torch

It is important to find a way to set the torch to the same flame size for each test. The exact way you choose to do this will depend on the torch you are using and the amount of heat from the flame that is appropriate for your students' models. Most propane torches produce flames that increase in length as the gas flow is increased, with a range of 2/5 to 3/5 of an inch (10 to 15 mm) for moderate sized flames. If your torch behaves this way, you can bend the end of a paper clip to the desired length and hold it in the flame as you adjust the fuel valve. See Figure 7.6. (Of course you will need to be careful not to hold the paper clip in the flame too long because it conducts heat to your fingers. Also, be careful to place the hot paper clip on a heat safe surface.)

Other torches have flames that do not change much in length as the gas flow is adjusted. Some of them can be used with the valve "wide open." Others may need to be adjusted by sound or valve position or some other method that yields a repeatable setting. The next section explains how to check.

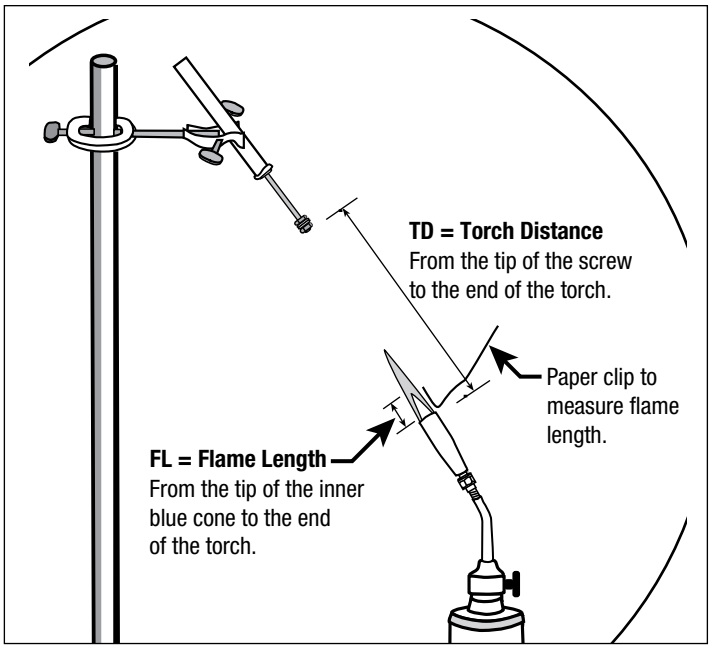

Figure 7.6. TPS test stand. A larger version of this drawing is included in the "Masters" section at the end of this guide.

Test the Stand to Assure Repeatable Results

Once you have set up the test stand as described above, measure the time to failure of some unprotected test assemblies to determine whether the results are repeatable. ("Failure" means when the screw falls off.) Be sure to have all your safety supplies on hand for these first trials—it is important to establish safe habits from the beginning. A helper with a stop watch would make the work easier, but you should perform these tests enough times before you implement them in class, so that you have a chance to correct any problems you might discover.

Install a test assembly in the clamp, light and adjust the torch, and slide the ring stand into place, starting the stopwatch at the sound of the base hitting the stop. See Figure 7.7. Stop the watch when the screw falls away from the dowel.

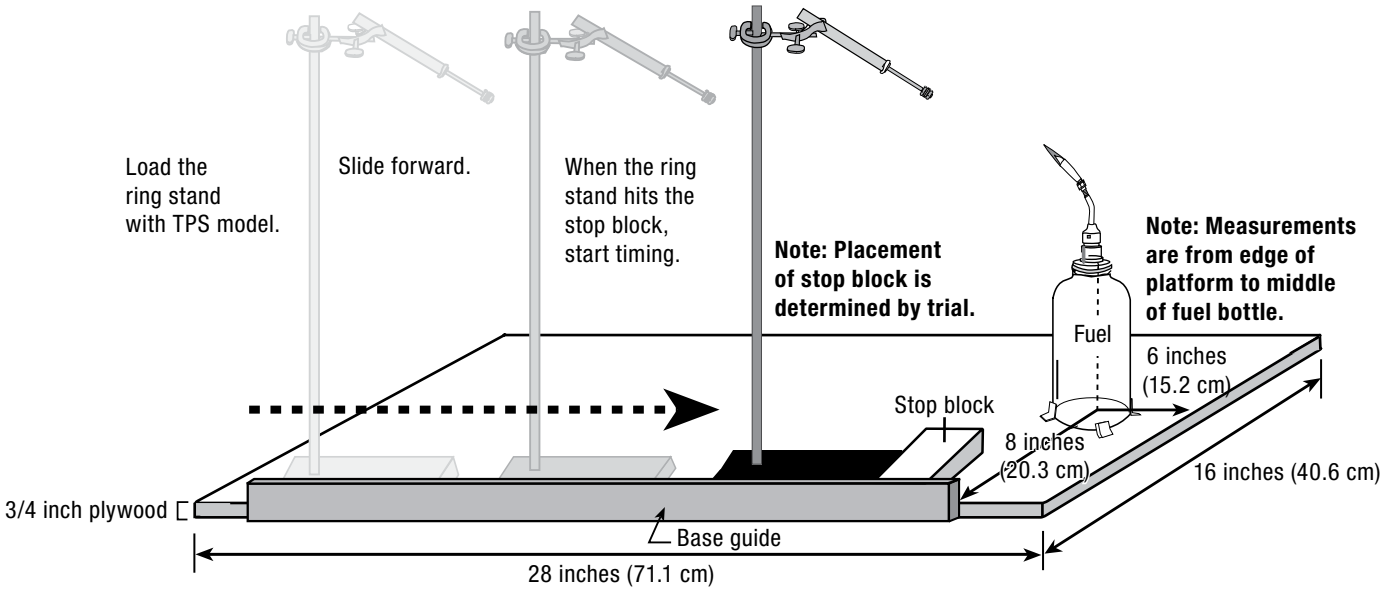

Figure 7.7. Using the TPS test stand. A larger version of this image is included in the "Masters" section at the end of this guide.

Record the time. Measure 3 or 4 times in this way, and then extinguish the torch, relight and adjust it, and then try 3 or 4 more times. Depending on the type of torch and the flame size (and the type of material used in the screws), times of 2 to 8 seconds are good, but they should cluster in a fairly narrow range, for example, 3 to 4.5 seconds. Larger variations (a range of 2 to 1 or more) indicate that something is changing from test to test. The most likely cause is that the test stand is putting the test assembly at the edge of the hottest part of the flame, so small variations in position have a large effect on the heat to which the test assembly is exposed. Careful alignment should correct this. Also, check the torch distance (TD), and the flame length (FL). If necessary, adjust the flame length until the average protection time falls in the 3 to 6 second range.

An Improved Alignment Fixture

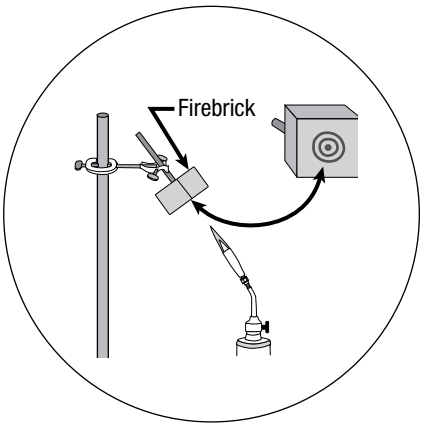

Figure 7.8. Alignment fixture. A larger version of this image is included in the "Masters" section at the end of this guide.

You can build an alignment fixture that is accurate and convenient to use if you have a piece of insulating firebrick and some furnace cement (both described in the Optional Materials list on page 56). See Figure 7.8. The firebrick is easy to cut and drill with normal metalworking tools, but it leaves an abrasive dust that you should not breathe. Use a hacksaw to cut a square piece about 2 by 2 by 1-1/2 inches (5 by 5 by 3.8 centimeters). Using a drill press (or other means to drill perpendicular to the surface), drill a 1/4-inch diameter hole 3/4 to 1 inch (1.9 to 2.5 centimeters) deep in the center of one square side. Using furnace cement, cement into the hole a 1/4-inch diameter wooden dowel (or a 1/4-inch diameter rod of another material that is rigid and heat-resistant). Start with a dowel longer than 4 inches (10 centimeters) and trim it after the cement has hardened so that the overall length of the firebrick and dowel is 4 inches +/- 1/4 inch (10 centimeters +/- 0.6 centimeters). Next, mark the spot on the "front" side that is on the centerline of the dowel. One way to do this is to put the dowel

in a drill and spin it. If you carefully hold a soft pencil or other soft marker near the block, you can mark a circle centered on the axis of the dowel. A safer way is to make a mark where you think the center is and then spin the dowel by hand to see if you got it right. When you have found the center, draw a circle, the size of a dime or a nickel, around it using a soft pencil.

To use the fixture, just mount it in the test stand as you would a test assembly, light the torch, and slide the ring stand into place. You should see an area on the block begin to glow red or orange. That is, of course, the area of maximum heat. You can compare its location with the circle you drew earlier to determine whether your test stand is correctly aligned.

Prepare the Materials for the Classroom

You may wish to assemble the materials into kits before distributing them to students. In this way you can reduce the amount of time spent on distributing materials. You can also ensure that all design teams receive the same materials. If you choose to incorporate the additional design constraint of a budget (described in the "Extensions," on Page 52, section of this guide), assembling kits in advance will simplify tracking the budget.

Set up the Classroom

Team Work Areas

Set up the classroom for student laboratory work to be done in teams. Each pair of students should have a clear work area where they can organize their materials and build their designs. A classroom desk or table will do.

Glue Station

If you set up gluing stations, one or two glue pots or glue guns will serve adequately for a class of 24 students. Students can go to the station to construct or repair testers. This will also make cleanup easier. Locate the glue station where you can easily observe it as you move around the classroom.

Test Station

Set up the test station in a central location where students can gather around. Testing is best managed by the teacher, with students recording times and making observations.

Organize Students in Teams

For this activity, students working in pairs will all have the opportunity to engage in all aspects of the activity: design, construction, testing, and recording. You may find that larger teams make it difficult for all students to actually manipulate the materials.

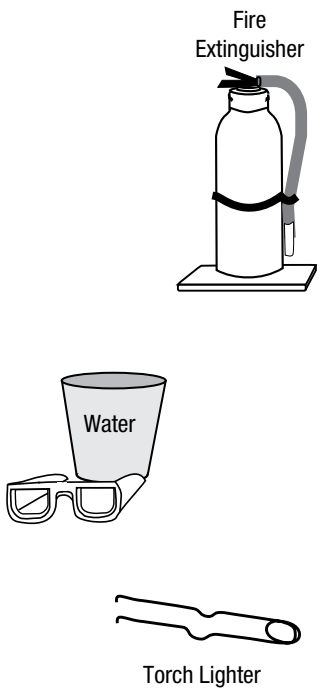

Figure 7.9. Safety Precautions.

Review Safety Procedures

In the interest of maintaining the safety of the students and of yourself, you should be aware of several safety issues during this activity. We explicitly recommend that only the teacher should operate the torch at a single test station when the models are tested. Students should not operate the torch. The teacher should wear safety goggles while operating the torch in order to model good safety procedures for the students. Any students near the testing area should also wear safety goggles during the time the torch is operating.

As an additional safety precaution, we recommend that the propane tank be affixed solidly to the sliding wood base of the test stand using L-brackets and duct tape. This will prevent any accidental movement of the propane torch.

When all testing for the day has been completed, the propane canister should be stored in a safe place. When a canister is empty, it should be disposed of properly. These canisters are manufactured and sold for use in conditions much less well controlled and supervised than your classroom and are, in fact, quite safe when handled with common sense. You may want to consult your local and state school regulations regarding flames and pressurized gas in the classroom in order to make sure you are in compliance.

In addition to taking these safety precautions, you should review with the students what they should do in the event an accident does occur. Review your safety procedures for dealing with burns. You should have a fire extinguisher and a fire safety blanket nearby and you should instruct students in their use. See Figure 7.9. They should also know the location of a fire alarm and how to use it properly.

A second safety issue to be aware of is possible injury from touching a hot model that has just been tested. Hot objects should be picked up only with tongs or insulated mitts or they should be allowed to cool before being handled. If you wish, the models can be dunked in a container of water to cool them after testing. We recommend that only the teacher pick up the tested models until the teacher is satisfied that they have cooled so as not to pose any chance of a burn.

Hot glue guns or glue pots have hot metal surfaces that can burn the skin when touched. Show students which areas are hot and advise them to be careful. The hot glue itself also can be painful, but is unlikely to cause any serious burn. Nonetheless, students should be warned that the glue is hot.

Students also should be careful when cutting the copper screening. It is possible for small pieces of metal to fly off when scissors are used to cut the screen. Therefore, students should wear safety goggles with side screens when cutting this material. You may wish to set up a separate “cutting station” at the side of the classroom in order to isolate this activity and be able to monitor it more closely.

Teaching Strategies for an Engineering Design Challenge

Like any inquiry-based activity, this Engineering Design Challenge requires the teacher to allow students to explore and experiment, make discoveries and make mistakes. The following guidelines are intended to help the teacher make this activity as productive as possible.

- Be sure to discuss the designs before and after testing. Discussing the designs before testing forces students to think about and communicate why they have designed as they have. Discussing the designs after testing, while the test results are fresh in their minds, helps them reflect on and communicate what worked and what did not and how they can improve their design the next time.
- Watch carefully what students do and listen carefully to what they say. This will help you understand their thinking and help you guide them to better understanding.
- Remind them of what they have already done; compare their designs to previous ones they have tried. This will help them learn from the design-test-redesign approach.
- Encourage students to keep a running log or journal of their ideas, questions, and observations in a notebook. These notes will help them prepare their storyboard in Session 7.
- Steer students toward a more scientific approach. If they have changed multiple aspects of a design and observed changes in results, ask them which of the things they changed caused the difference in performance. If they are not sure what caused the change, suggest they try changing only one feature at a time. This helps them learn the value of controlling variables.
- Be aware of differences in approach between students. For example, some students will want to work longer on a single design to get it “just right.” Make it clear that getting the structure designed, tested, and documented on time is part of the challenge. If they do not test a lot of models, they will not have a story to tell at the end. Remind them that engineers must come up with solutions in a reasonable amount of time.
- Model brainstorming, careful observation, and detailed description using appropriate vocabulary.
- Ask “guiding” or “focusing” questions. For example: “How does the heat get from the flame to the glue?” or “What made this design last so long?” Keep coming back to these questions as the students try different designs.
- Require students to use specific language and be precise about what they are describing. Encourage them to refer to a specific element of the design (shield, air pocket, copper screen layer, etc.) rather than “it.”
- Compare designs to those of other groups. Endorse borrowing. After all, engineers borrow a good idea whenever they can. However, be sure that the team that came up with the good ideas is given credit in documentation and in the pre-test presentation.

- Emphasize improvement over competition. The goal of the challenge is for each team to improve its own design. However, there should be some recognition for designs that perform extremely well. There should also be recognition for teams whose designs improve the most, for teams that originate design innovations that are used by others, for elegance of design, and for quality construction.
- Classify designs and encourage the students to come up with their own names for the designs to be used in the class.
- Encourage conjecturing. Get students to articulate what they are doing in the form of "I want to see what will happen if…"
- Connect what students are doing to what engineers do. It will help students see the significance of the design challenge if they can see that the process they are following is the same process that adult engineers follow.
- Help students understand that designs that "fail" are part of the normal design process. Discuss how engineers and scientists learn from failures.

Helping Students Understand the Design Process

Engineering involves systematically working to solve problems. To do this, engineers employ an iterative process of design-test-redesign, until they reach a satisfactory solution.

Designs are conceived, formulated, developed, and refined based upon requirements by the customer; normally NASA is the customer and the designs are developed by private companies for NASA. For example, NASA may require that the TPS keep the structure to which it is attached below 250°F (121°C) throughout launch or perhaps the entire mission. This is the requirement. The TPS design must satisfy that requirement and demonstrate that it can meet the requirement by analysis and subscale model testing before flight testing is initiated.

In the Engineering Design Challenges, students experience this process. To help students visualize the cyclic nature of the design process, we have provided a chart that you can use in a class discussion. See Figure 7.10.

Once students have sufficient experience in designing, building, and testing models, it is valuable for them to formally describe the design process they are undertaking. Students require a significant amount of reinforcement to learn that they should study not just their own results but the results of other teams as well. They need to realize that they can learn from the successes and failures of others, too.

Select a time when you feel the students have had enough experience with the design process to be able to discuss it. Use the black-line master of "The Design Process" in the "Masters" section to make an overhead transparency. Project it on a screen. Then, using it as a guide, go through the process step-by-step, using a particular design as an example. It is useful to hold up the model and point out specific features that may be the result of studying the test data, unsuccessful builds, or additional research. For example, using a particular model, ask "How did this feature come about? Where did you get the idea? Was it the result of a previous test, either done by you or by another team?"

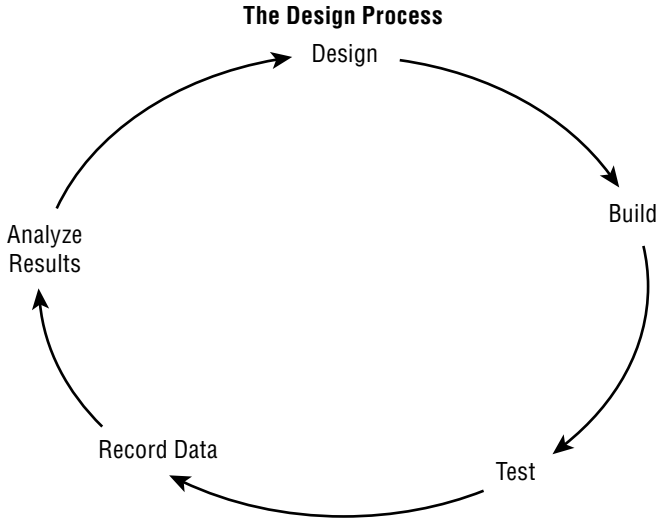

Figure 7.10. A larger version of this image is included in the "Masters" section at the end of this guide.

8. Classroom Sessions

Session 1

Introducing the Challenge and Getting Started

In this first session, you will introduce the activity and provide students with background information about NASA, the Ares vehicles, and thermal protection systems. You will define the challenge and discuss how engineers approach a design problem. You will conclude the session by testing several unprotected models to establish a baseline time upon which students will improve.

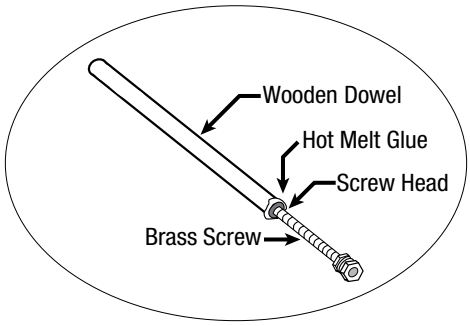

Figure 8.1.TPS test assembly.

Learning Goals

- Define "thermal protection system."
- Understand thermal protection systems.
- Understand the requirements for a thermal protection system on a reusable launch vehicle.
- Recognize the need for models.
- Understand the relationship between a model and the actual object being studied.
- Recognize the need for a baseline measurement.
- Make observations and collect data.
- Record data in a table.
- Understand the need for averaging.
- Calculate averages.
- Begin developing ideas about heat transfer.

Materials

- Transparencies for overhead projector. (Masters can be found in the back of the guide.)
  - The Ares vehicles.
  - The Challenge.
  - Relationship of TPS Model to Ares.
- Test station (see "Preparation" section beginning on Page 21).
- At least 6 prepared test assemblies. See Figure 8.1.
- At least 3 stopwatches.
- Wall chart (or chalkboard) for recording times.
- Design Specification and Test Results Sheet. (Master in back of guide.)
- Materials related to Ares and the Constellation Program.

1. Introduce the Unit

Explain to students that they will take on the role of engineers for this unit. They will attempt to solve a problem that NASA engineers are working on as they develop the Ares vehicles. Use the background information beginning on Page 9 and the masters in Section 12.

Introduce the term "thermal protection system" (TPS) and ask students what they think it means. Ask students to think of examples of thermal protection in everyday items. Use the background information in the previous section, as well as other resources you might have, to introduce the concept.

2. Introduce the Challenge

Explain to students that their challenge is to build the best possible TPS for a model of the Ares vehicles that you will test in the classroom. Pass around a prepared test assembly and explain that it will simulate a portion of the spacecraft. Use the transparency showing the relationship of the test assembly to the spacecraft. Ask students how the model simulates the thermal protection problem faced by designers of the Ares vehicles.

- How are the model and the spacecraft similar? See Figure 8.2.
- What part of the model represents the inside of the spacecraft that must be protected? Students should recognize that the glue represents the inside of the spacecraft while the screw represents the outside.
- What part of the model represents the "skin" of the spacecraft?

Explain that the test assembly will be held over the flame of a propane torch until the glue melts and the screw falls off. Their goal is to keep the screw from falling off for as long as possible.

Explain the challenge goal and design constraints. Show the transparency that lists the challenge and the design constraints. For the remainder of the challenge, post this information prominently in the classroom.

Explain that engineers always face restrictions on their designs. Sometimes they are restricted by how much it would cost to build something. Sometimes they are restricted by how long it might take to build. There are many other possible restrictions. In this challenge, students will also face restrictions or constraints.

Discuss why the TPS cannot touch the dowel or the glue (because they represent parts inside the spacecraft). Post the challenge goal and design constraints in a prominent place in the classroom. (Reproducible copy is available in the "Masters" section at the back of the book.)

The Challenge:

Build a TPS, using the specified materials, that protect the model for the longest possible time.

Design Constraints:

- Use only the specified materials to construct the TPS.
- No glue may be used in the TPS itself.
- No part of the TPS may touch the dowel.
- No part of the TPS may touch the glue.

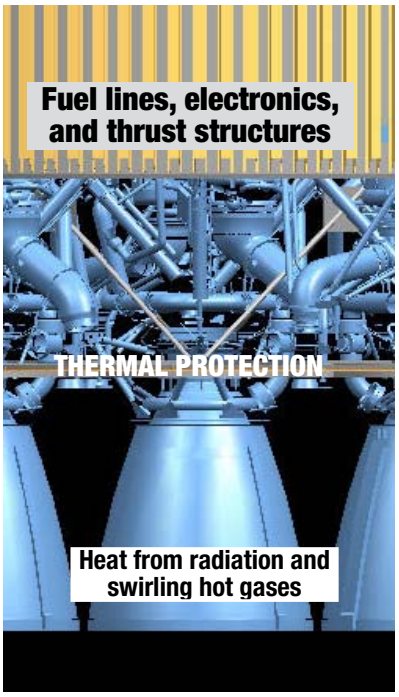

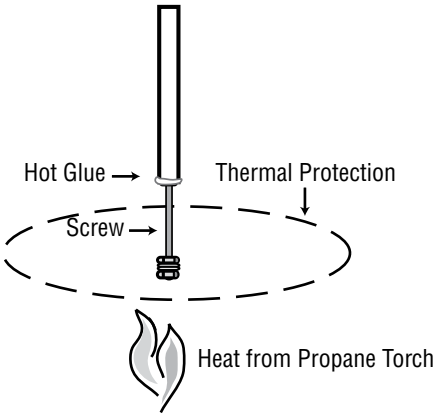

Figure 8.2. Relationship of the TPS model to a spacecraft. This figure is reproduced as a large graphic in the "Masters" section.

3. Explain the "Culminating Activity"

Explain that each team will spend one class period at the end of the challenge constructing a "storyboard" or poster that will tell the story of the development of their TPS. Using the storyboard, each team will then make a presentation to the class explaining the evolution of their design.

The storyboard should contain at least three of the team's design specification sheets. If possible, students should attach three of the actual tested models. The poster should show the evolution of the team's design from its initial to intermediate to final stages. Essentially, it should "tell the story" of the design process and explain why the design changes. It should conclude with a concise statement of "what we learned."

Baseline: the initial measurement that will be improved.

4. Establish a Baseline Protection Time

Students will first test several unprotected assemblies in order to establish a starting point, which is also called a baseline. Refer to the "Preparation" section, on Page 20, for instructions for setting up the test station. In order to get quickly to the testing itself, use test assemblies that have been constructed in advance.

The screw should drop off within 3–6 seconds. If the average is outside this range, check the alignment of the screw with the flame, the torch distance (TD), and the flame length. If necessary, adjust the flame length (FL) until the average protection time falls in the 3–6 second range.

Review safety procedures with students. Students standing near the test station should wear goggles. A container of water should be nearby for dousing hot models, if necessary. Students should know the location of the fire extinguisher.

Align the flame and test several models. Check the flame length between tests and adjust if necessary. Have at least three students time the tests. Have one or more students calculate the average time for each test. Record the average test times, as a public record, on the easel pad or bulletin board. A sample recording table is included on Page 38. See Figure 8.4.

If students question the effect of differing amounts of glue, you may want to specifically compare test assemblies with different amounts of glue.

5. Discuss the Results

After the test data has been recorded, calculate the average protection time for all the tests. Ask students what could be causing variation in the results? Possible answers include: different amounts of glue, a change in flame length between tests, observer error, etc.

Discuss with students the importance of standardizing test conditions (correctly aligning the test assembly and the flame, making sure the flame length is consistent for all tests), and of having several students time each test.

Begin Thinking about Heat Transfer

Ask: "How does the heat from the flame reach the glue?"

This is an important question for students to begin thinking about because it will influence the way they design a TPS. You may want to discuss convection, conduction, and radiation as methods of heat transfer. Do not plan to arrive at the definitive understanding of how the heat from the flame reaches the glue at this point. Students' understanding of the process will continue to evolve as they go through the design, build, and test process. Do keep coming back to the question, as you and they discuss the results of each design.

Connect the Simulation to the Real Spacecraft Situation

"How does this model simulate the thermal protection problems faced by a spacecraft such as the Ares?"

- How are they similar? How are they different?
- The spacecraft has an "inside" that must be protected. What part of the model represents the "inside?" What is it that must be protected on the model?
- What part of the model represents the "skin" of the spacecraft?

6. Wrap-up

Show students the copper screening and the nuts and washers they will use for their first design. Ask them to think about their designs before the next session.

Session 2

Design 1: A TPS Made of Copper Screen

In this session, students will design and build their first thermal protection system using nuts, washers, and a small piece of copper screen. The first design is kept simple in order to allow time to complete the entire design/build/test cycle within a single session. It is important during this session to establish consistent procedures for testing including: pre-test approval of design and recording sheet, oral presentation of key design features, accurate timing and reporting of results, and a post-test discussion.

Learning Goals

- Practice construction techniques including use of glue pot or glue gun.
- Recognize the need for clear documentation.
- Practice documenting design.
- Practice making and recording observations.

Materials

- Extra dowels and screws.
- Glue station.
- Test station.
- Chart paper to record test results.
- Transparency of completed Design Specifications and Test Result Sheet (found in the "Masters" section).
- Each team receives:
  - A test assembly.
  - 2 hex nuts.
  - 2 washers.
  - A 3-inch (7.6-centimeter) square piece of copper screen.
  - A Design Specifications and Test Result Sheet.

1. Review the Design Challenge and the Design Constraints

2. Introduce the Materials

Demonstrate how to construct a test assembly. Remind students that the assembly is somewhat fragile.

Depending upon the level of your students, you may wish to demonstrate how the nuts and washers can be used to fasten the copper screen to the screw. In general, however, the point is **not** to show students how to build the first design, but to allow them to exercise their creativity.

3. Review Safety Issues

Point out to students that the tip of the glue gun and the metal strip at the front of the glue pot are both hot and should be avoided. Review the procedure for burns. Remind students to wear safety goggles while cutting copper screening.

4. Introduce the Recording Sheet

Introduce the Design Specifications and Test Results Sheet. See Figure 8.3. Tell students that this is where they will record all the details of their designs and the results of their testing. Explain that engineers need to keep careful records. Ask students why record keeping is so important. Discuss each part of the "Design Spec" sheet.

Figure 8.3. Design Specifications and Test Results Sheet. A larger version of this image is included in the "Masters" section at the end of this guide.

Remind students to keep track of their designs by numbering their recording sheets. Remind them that they will use their recording sheets to construct a storyboard at the end of the challenge.

Explain to students the importance of a detailed sketch of their design. Their goal in sketching should be that someone looking only at the sketch could reconstruct their design. You may wish to show a completed recording sheet as a sample.

Two sketching techniques to introduce are detail views and section or cut-through views. A detail view is a separate close-up drawing of a particular portion of the design that may be difficult to show clearly in the drawing of the full design. A section view shows what the design would look like if it were sliced in half. It enables the artist to show hidden parts of the design.

As an extension activity, have students try to reconstruct another team's design using only the recording sheet. Assess the recording group on the quality of the sketch and the constructing group on their ability to interpret the sketch.

5. Explain the Following Test Procedure to Students

- When their design is completed, the team completes a recording sheet and brings the model and the recording sheet to the teacher.
- The teacher checks the recording sheet for completeness and accuracy.
- The teacher checks that the model has conformed to all design constraints.
- Before their model is tested, each team must do a brief oral presentation for the entire class in which they describe the key features of the design.
- During the testing, the team should carefully observe and record the performance of their design.

6. Students Design and Build Their Models

Allow 10–15 minutes for this first design and build. Establish a cut-off time when you will begin testing. Teams that do not have designs ready to test by the cut-off time must wait until the next round of testing.

7. Approve Models for Testing

When a team delivers their design and recording sheet for testing, check the following:

- ❑ Model uses only allowable materials.
- ❑ No glue was used in construction of the TPS itself.
- ❑ No part of the TPS touches the glue.
- ❑ No part of the TPS touches the dowel.
- ❑ The model has a team name or identifying mark on it.
- ❑ The recording sheet is completely filled out, including a satisfactory sketch.

If the model is approved, place it on the testing station table. You might call this "being on deck."

8. Test the Models—Whole Class

Begin testing when most of the teams' designs have been approved. Have students stop working and gather around the test station. **The teacher should do all work involving the propane torch.**

Older students may be able to continue working while other teams have their models tested. For this arrangement to work, you will need to locate the test station in a central location where students can view it from their work areas.

You may wish to classify the models once each team has presented. Students may come up with classifications based on design strategies. For example, students have classified their TPS designs as mushroom, shield, cone, umbrella, battering ram, and burrito.

Before lighting the torch, have a member of each team stand and hold up the model or show it around to all other students. The representative should explain:

- Key features of the design.
- Why those features were used.
- Where the idea came from (a previous design, another team's design, another type of thermal protection, etc.).

Select three student observers to time the test with stopwatches. Assign a student to record the results of each test in a chart on the chalkboard or on a large sheet of paper. See Figure 8.4.

Team	Design #	Protection Time			
		Observer 1	Observer 2	Observer 3	Average

Figure 8.4. Test result sheet.

You may also want to include a column for "design strategy" if you choose to classify the designs.

9. Discuss the results of testing

The post-test discussion is critical to expanding students' learning beyond the design and construction techniques and connecting their design work with the science concepts underlying their work.

Encourage students to hold the model and use it to illustrate their point when they talk about a particular design feature.

For each model, you should pose the question:

"How did the TPS keep the heat of the flame from reaching the glue?"

Other discussion questions might include:

- What happened to each part of the TPS during the testing?
- Did any parts of the design seem to heat up more than the rest? How could you tell?
- Which model designs were most effective? What made these designs effective?

Record (or have a student record) the most successful design features on a transparency or on a wall chart. This list should be expanded and revised throughout the activity.

Session 3

Designs 2 and 3: TPS Made of Copper Screen

Using what they have learned from the first design, students will revise and redesign their TPS in two more design-build-test cycles using only copper screen, nuts, and washers. See Figure 8.5.

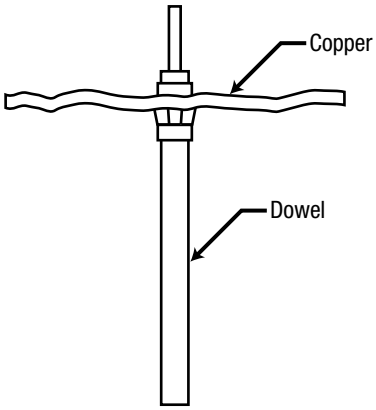

Figure 8.5. Drawing based on a student sketch.

Learning Goals

- Distinguish between effective and ineffective design features.
- Incorporate design strategies gleaned from experimentation and observation.
- Refine observation skills.
- Draw conclusions based on analysis of test result data.

Materials

- Extra dowels and screws.
- Glue station.
- Test station.
- Chart to record test results.
- Each team receives:
  - 2 test assemblies.
  - 4 hex nuts.
  - 4 washers
  - 2 3-inch (7.6-centimeter) square pieces of copper screen.
  - 2 Design Specifications and Test Result Sheets.

1. Review the Previous Session

If a day or longer has passed since the previous session, review the results of the first round of testing. Review the successful and unsuccessful design features.

2. Design, Build, Test, and Discuss the Next Two Designs

Continue to add successful design features to the list you started on a transparency or chart paper in the previous session. Continue to ask students how the TPS prevents the heat from getting to the glue. Refer to "Linking Design Strategies and Observations to Science Concepts," on Page 47, for connections that can be made between student observations and science concepts.

In the post-test discussion, lead students to make conclusions about the protection offered by a piece of copper screen.

Allow students approximately 15 minutes to design, build, and complete a recording sheet for each model.

Session 4

Design 4: TPS Made of Copper Screen and Aluminum Foil

Once students have designed and tested three models made from copper screen, introduce the next material they will use, aluminum foil. Lead a brief preliminary discussion about the properties of aluminum foil and how it might provide thermal protection. See Step 2 below for suggestions of what to discuss about aluminum foil. See Figure 8.6. Conduct the same design-build-test cycle described in the previous sessions.

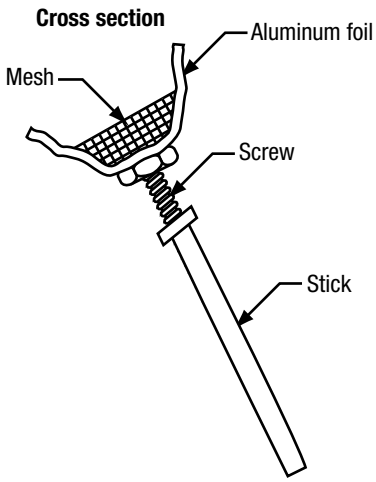

Figure 8.6. Drawing based on a student sketch.

Learning Goals

- Distinguish between effective and ineffective design features.
- Incorporate design strategies gleaned from experimentation and observation.
- Refine observation skills.
- Record test data.
- Analyze test result data and draw conclusions.
- Refine understanding of heat transfer, conductors, and insulators.

Materials

- Extra dowels and screws.
- Glue station.
- Test station.
- Chart to record test results.
- Each team receives:
  - 1 test assembly.
  - 2 hex nuts.
  - 2 washers.
  - 1 3-inch (7.6-centimeter) square piece of copper screen.
  - 1 3-inch (7.6-centimeter) square piece of aluminum foil.
  - 1 recording sheet.

1. Review the Previous Session

If a day or longer has passed since the previous session, review the results. Review the successful and unsuccessful design features and any conclusions students were able to draw.

2. Introduce the Materials

Lead a discussion about aluminum foil as a thermal protector. You may want to ask some of the following questions:

- What do the foil and copper screen have in common? How are they different? Refer to the background section, "Thermal Conductivity and Heat Capacity," on Page 16.
- What are some familiar uses of aluminum foil?
- Based on how it is used, what can you conclude about the thermal properties of aluminum foil?
- What do you think will happen to the aluminum foil in the flame?

3. Design, Build, and Test a TPS Using the Copper Screen and Aluminum Foil

Follow the procedures from earlier test cycles.

4. Discuss the Results

Refer to "Linking Design Strategies and Observations to Science Concepts" on Page 47, for connections that can be made between student observations and scientific concepts.

Session 5

Designs 5 and 6: TPS Made of Copper Screen and Aluminum Foil

In this session, students will continue to revise and test their designs. See Figure 8.7.

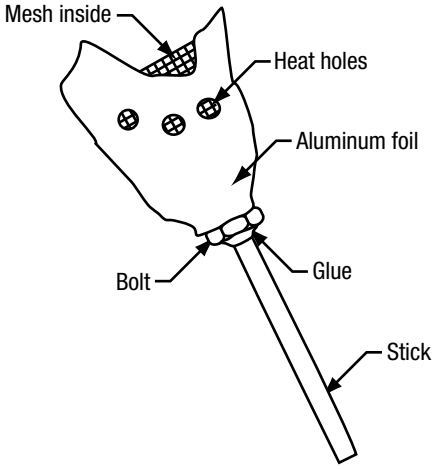

Figure 8.7. Drawing based on a student sketch.

Learning Goals

- Distinguish between effective and ineffective design features.
- Incorporate design strategies gleaned from experimentation and observation.
- Distinguish between thermal properties of copper screen and aluminum foil.
- Refine observation skills.
- Record test data.
- Analyze test result data and draw conclusions.
- Refine understanding of heat transfer, conductors, and insulators.

Materials

- Extra dowels and screws.
- Glue station.
- Test station.
- Chart paper to record test results.
- Each team receives:
  - 2 test assemblies.
  - 4 hex nuts.
  - 4 washers.
  - 2 3-inch (7.6-centimeter) square pieces of copper screen.
  - 2 3-inch (7.6-centimeter) pieces of aluminum foil.
  - 2 recording sheets.

1. Review the Previous Session

If a day or longer has passed since the previous session, review the results. Review the successful and unsuccessful design features, as well as any conclusions students were able to make.

2. Design, Build, and Test a TPS Using the Copper Screen and Aluminum Foil

Follow the procedures from earlier test cycles.

3. Discuss the Results

Refer to "Linking Design Strategies and Observations to Science Concepts" on Page 47, for connections that can be made between student observations and science concepts.

Session 6

Construct a Storyboard/Poster

As a culminating activity, each team creates a "storyboard" poster that documents the evolution of their TPS designs from initial to intermediate to final stage. The storyboard provides students with a way of summarizing and making sense of the design process. It provides opportunities for reflection and enables students to see how their design work has progressed from simple to more sophisticated and effective designs.

Learning Goals

- Summarize and reflect on results.
- Organize and communicate results to an audience.

Materials

- Posterboard or large sheets of paper approximately 2 by 3 feet (61.0 by 91.4 centimeters), one per team.
- Markers, crayons.
- Plastic sandwich bags for holding tested models.
- Glue or tape for attaching recording sheets and tested models to storyboard.

1. Explain the Assignment

Explain to students that they will create a poster or "storyboard" that will tell the story of their developing TPS design. Explain that professional conferences usually include poster sessions at which researchers present the results of their work.

The storyboard should include recording sheets, tested models, and any other artifacts they think are necessary. The storyboard should include a brief text that describes how their design evolved through at least three stages: beginning, intermediate, and final.

Students may attach their completed recording sheets or re-copy the information onto the storyboard. They should attach the actual tested models if possible. Placing the model in a plastic bag and attaching the bag to the poster works well.

2. Define the Assessment Criteria

Explain to students that their storyboards will be evaluated on the following criteria:

- A clear storyline, organized to show the development of the design.
- Explains the baseline model.
- Shows at least three designs.
- Contains clear sketches with key features identified.

- Includes test results and description of what happened to the design during the test.
- Includes conclusion about the most effective thermal protection system.
- Uses scientific vocabulary.
- Has an appealing layout with a title.
- Correct grammar and spelling.

You may optionally assign additional research or invite students to do research on their own initiative. Research findings could also be included on the storyboard. See the resource list in the back of the guide for suggested starting points. Students could investigate:

- Thermal protection systems used in rockets.
- Thermal protection systems used in other devices and vehicles.
- Properties of materials.
- Properties of a propane flame.

3. Create the Storyboards

See the "Math Connections" section on Page 7 for additional suggestions for graphing and analysis that could be included on the final posters.

Give students an entire class session to create their storyboards. You might take this opportunity to encourage students to practice sketching detail and section views of the models as described in Session 2.

You might also want to assign several students to prepare a "results" poster for the entire class. This poster would make use of the charts on which you recorded data from each test session. The overall improvement of the class could be calculated and displayed.

Optional Extension:

Students may create their storyboards electronically using digital photographs of their models and may post their presentations on a school web site.

Session 7

Student Presentations

When all storyboards have been completed, put them on display in the classroom. Allow students time to browse among the displays. Encourage conversation. Then reconvene the class and allow each team a few minutes to present their storyboard and the results of their research and testing.

Another option is to conduct a poster session as might occur at a professional conference. Half the teams would remain with their posters to answer questions while the other teams browse. After about 15 minutes, the browsing teams stand by their posters while the other teams browse. Browsing teams should ask questions and engage the presenting teams in conversation.

The poster session provides an opportunity to invite parents, other teachers, and students from other classes in to view student work.

Learning Goal

- Communicate results to an audience.

Linking Design Strategies and Observations to Science Concepts

An important opportunity for science learning through this Engineering Design Challenge comes from the connections that students make between their design solutions, their observations, and the underlying scientific principles. As you observe students designing, as you conduct the testing, and as you discuss the test results, there will be numerous opportunities to draw connections between what the students are doing and the science principles of heat energy and heat transfer. This section provides suggestions and background information to help you draw those connections at the moment they arise, the "teachable moment," when students are highly engaged and receptive to new information. The section is organized according to design strategies and observations made during pilot testing of this unit.

Observation: Changes in the Foil and Copper Screen

Encourage students to watch carefully for changes in the TPS materials during and after testing. Careful observation of changes in the material can help determine how hot it got. When copper screen is exposed to high heat for a length of time, it first glows, then turns black, and eventually it disintegrates. If the copper screen is folded it will tend to unfold. Aluminum foil becomes faintly multihued, gets thinner, turns black, and eventually disintegrates.

The changes in the TPS materials exposed to heat are evidence of chemical activity. Many other good examples of chemical changes caused by heat occur in the cooking of food. For example, foods change color when they are cooked because chemical activities take place during cooking. The changes you see in the copper and aluminum are due to rapid oxidation driven by the high temperatures. Both copper and aluminum oxidize at room temperature, but the high temperatures caused by the torch increase the speed of these reactions. Students can think about how engineers must anticipate how TPS materials will react at high temperatures. Engineers also must think about the environment in which the TPS is operating. For example, at orbital altitudes there is almost no oxygen present; hence materials do not readily oxidize. But when high temperatures are encountered during launch, oxygen is present, and oxidation reactions do occur.

Interestingly, the melting point of aluminum is higher than its combustion point. Therefore, aluminum will burn before it melts if there is oxygen present (not in space).

Observation: Glowing

Students may notice parts of the TPS, such as the copper screen and the aluminum foil, glowing. Materials glow because they are emitting electromagnetic radiation in the visible portion of the spectrum. This radiation carries away energy, so in the absence of further energy input, a glowing material gradually cools and stops glowing. Think about taking a glowing piece of hot metal from a furnace. At first, it may glow white hot, then yellow, then red, and finally it will stop glowing. The changes of color indicate a shift in the spectrum of light it is

emitting. The spectral "signature" corresponds to the temperature of the metal. When it stops glowing, it is still warm, and still emitting radiation, but now the radiation is no longer in the visible portion of the spectrum. It is in the infrared.

Students may notice that only some parts of the TPS glow. The glowing parts are at a higher temperature than the non-glowing parts. The glowing can show students where heat is building up on the model, i.e., where the "hot spots" are. Students may notice that after a while, parts of the TPS that were glowing begin to deteriorate. Parts of the copper screen and the aluminum foil may vaporize. These "burn-throughs" destroy the structural integrity of the TPS and may allow the convective stream of hot gas from the torch to reach the glue joint. This is analogous to a "burn-through" on the TPS of a spacecraft and is to be avoided.

Compare the TPS test to what happens when you turn on the burner of an electric stove. If you put your hand above the burner, you can feel the heat radiating from it long before it starts to glow. As the coil gets hotter, it begins to glow. Where the TPS is glowing, it is hottest. By observing where the model is glowing, you can tell where the largest amount of heat energy is going.

Why do hot metals glow? Metal atoms have free electrons that can be boosted into a higher energy state by an inflow of energy. When these electrons return to the lower energy state they emit photons as radiating energy. Atoms absorb heat energy and then give some of it back as electromagnetic radiation, some of which is visible light. As the material heats up, its atoms give off more and more radiating energy. As the temperature increases, more of the radiating energy is emitted as waves of shorter and shorter wavelengths. Still, most of the energy is emitted in the infrared spectrum. Only when the temperature gets high enough do the wavelengths become short enough to be visible as light.

If the TPS is glowing, then some of the heat energy it has absorbed is radiating into space rather than conducting to the screw. It is not just conducting the heat back to the screw. Radiation actually cools the TPS.

Parts of the TPS that are not glowing are, obviously, not as hot, probably because they are not in the path of the hot air coming from the torch. This does not mean that those parts of the TPS are entirely ineffective; they may still be blocking some of the hot air and they may be radiating energy in the non-visible portion of the spectrum. Another possibility is that those parts of the TPS may be absorbing heat, but are conducting that heat on to something behind.

Observation: How the Heat Gets to the Glue

Encourage students to compare the conduction paths of various TPS designs. Trace backward, from the glue to the flame. Find the path along which heat energy flows. Which model had a more direct path? Which model had a longer path? Which model had air gaps or other insulators in the path? How does this information compare to the test results for the TPS?

Design Strategy: Cover the Tip of the Screw

No matter what kind of shield you build, if the tip of the screw is exposed to the flame, the TPS will not be very successful. Shielding the screw against the hot blast of air flowing from the torch is an effective strategy. Students must come to the realization that they need to protect the tip of the screw rather than just the glue.

Many of the kids are wrapping the screw with copper screen or aluminum foil. Some are still leaving the screw tip exposed. When asked why they wrap the screw, they say that it forms a "heat sink."

Design Strategy: A Long Conduction Path

Students should understand that they can increase protection time by creating the longest and most tenuous path of conduction. You can visualize this in terms of heat flowing like a river. Just as a broad deep river will carry a lot more water than a shallow narrow stream, a wide conduction path will allow more heat to flow along it.

In constructing a long conduction path, the cooler areas of the shield might suggest locations on the TPS where connections between materials should be made in order to reduce conduction. For example, if you will be layering two pieces of foil, it will be more effective to attach the two pieces to one another as far from the flame as possible, where they stay the coolest. See the section "Observation: Glowing," on Page 47.

One team created what they called "the battering ram," a tightly folded and coiled piece of aluminum foil attached to the front of the screw. They expected the thick wad of foil to take a long time to heat up.

Design Strategy: Wrap the Screw

Students may have seen hot water pipes or tanks wrapped in a fiberglass blanket or foam sheath. The fiberglass blanket may have a backing that looks like aluminum foil. The fiberglass acts as an insulator while the aluminum foil serves to protect the fiberglass by keeping moisture out. (It also reflects some radiating energy.)

Wrapping the screw will prove a rather ineffective strategy because it ignores the issue of conduction. Because the aluminum foil or copper screen is in contact with the screw in so many places, heat energy absorbed by the wrapping will easily conduct into the screw.

Design Strategy: Large Mass of Material at the End of the Screw

Like wrapping the screw, this strategy does not overcome the problem of conduction. A (relatively) large mass of material in front of the screw will take longer to heat up, but eventually the heat will conduct through it. Even while it is heating, it will conduct heat back to the screw that it is touching. The hotter the TPS gets, the more heat will be conducted back to the screw. If you put a mass of thermally conductive material in front of but still touching the screw, it will take a while for it to heat up, but the heat will eventually be conducted back to the screw.

This provides an opportunity to discuss specific heat. Materials with a lower specific heat will conduct heat energy faster. Copper will conduct heat energy 2.5 times faster than aluminum. Ask students to put their hands on different materials in the classroom to tell which ones have a lower specific heat.

Observation: Do the Holes in the Copper Screen Matter?

Compare the performance of two similar shields, one made from copper screen and one made from aluminum foil. Because the aluminum foil is much more effective at blocking the hot air, it should protect the glue for much longer.

Design Strategy: Reflect the Heat

Students may attach a mirror-like shield of aluminum foil designed to "reflect" the heat. This would be a more appropriate description if the heat energy was radiating. But the amount of radiating energy is a negligible amount in this situation compared to the amount of energy in the hot air flowing up and away from the area around the flame. The effectiveness of a "reflecting" shield is actually found in its ability to block the hot air from reaching the screw. If the torch was pointed down at the TPS, the protection time would be much longer because much of the hot air would flow upward because it is less dense.

You might ask students about using aluminum foil in baking. Does it make a difference if a dish in a conventional oven is covered with foil with the shiny side up or down? No, because the aluminum is conducting the heat from the air inside the oven into the food. Heat in an oven is not radiating energy and therefore the reflective side of the foil will have no different effect than the dull side. This contrasts with the silvered thermal bottle, which reflects radiated heat. If they are hot, this heat comes from the contents and if the contents are cold from the outside of the bottle.

Design Strategy: Deflect the Heat

Students may design a flat or cone shaped heat shield to deflect the heat. It would be useful for students to think about the stream of hot gas emanating from the area around the torch. They could visualize it as a stream of water. Having in mind something like a stream will give them something to think about blocking. You might introduce the term "air convection."

A convex shield will deflect the flow around the screw. Attaching the tip of the cone to the tip of the screw will provide a conduction path that defeats the purpose of the shield.

Some students may design a concave shield intended to deflect the heat that actually functions as a heat collector. You can compare this to a satellite dish or radar reflector. If you have a concave shape that blocks the air moving from the torch then it might cause the air to stay around the tip of the screw and heat it up even more.

Design Strategy: Multiple Layers

A TPS made of many layers can be effective in at least two ways.

If students choose to construct a TPS using multiple layers, encourage them to experiment with the amount of space they leave between layers. Layers that are tightly packed will still allow heat transfer by conduction. Loosely packed layers will create a longer conduction path and will incorporate air pockets as insulating spaces.

Layers also block heat transfer by radiation. Each layer reflects some heat back so each successive layer back is at a lower temperature. The more layers, the longer it will take before the layer connected to the screw heats up enough to conduct heat back to the screw.

Design Strategy: Air Pockets

An air pocket can serve as an effective insulator for the glue. Air pockets may be created by shaping the foil into a tube or bag shape. A loose layering of materials will trap air between the layers. Thinsulate, fiberglass insulation, down parkas, and double pane windows all use this strategy for insulation. In order to travel through an air space, heat energy must radiate from air molecule to air molecule, which are much farther apart than atoms in a solid or liquid. This is why it takes much longer for heat to pass through an air space.

Design Strategy: Increasing Surface Area of the Shield

Increasing the surface area of the shield will increase the amount of heat transferred by conduction. The larger the surface area of the shield, the better it cools by conduction because more air comes into contact with the shield.

A larger surface area can be created simply by making the shield bigger, or by accordion pleating to get fins, like in a radiator. Because of the materials constraints in this engineering design challenge, a large shield will need to be thinner. A smaller shield with finer fins can be just as effective as a larger flat one.

Conduction Demonstration

Use this demonstration to show how heat travels gradually through a solid. This may help students understand how heat conducts through the brass screw. See Figure 8.8.

To do this demonstration, you will need:

- 6-8 brass screws glued to the rod at 2-inch (5-centimeter) intervals
- A hot melt glue gun or glue pot.
- A brass or steel rod about one foot long.

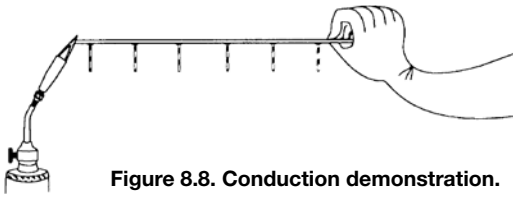

Figure 8.8. Conduction demonstration.

Test Station

Ask students to predict what will happen when you hold one end of the rod in the flame of the propane torch. If they suggest that the screws will fall off, ask them to be more specific. Will the screws drop off at equally spaced intervals of time? Will they drop off at an accelerating rate? Why or why not.

Light the torch and hold the rod by one end so that the other end is in the flame. Hold the rod in the flame until all the screws have dropped off or until the heat conducting up the rod reaches your hand.

Ask students what this demonstration can tell us about the way heat moves through the metal rod.

To illustrate different thermal conductivities, try the demonstration with rods made of different materials.

9. Extensions

You may find, especially with advanced students, that students achieve protection times of over 4 minutes. At this stage, you may want to add additional design constraints to increase the challenge.

Turning up the Heat

The simplest way to make the challenge more difficult is to increase the flame length. You may also want to test the same design with different flame lengths and then plot the data. Students can thus find a relationship between flame length and protection time.

Limiting Designs by Mass

The Ares TPS must weigh as little as possible. To achieve this, engineers use the lightest weight materials that can provide the protection needed. Challenge students to build the lightest weight TPS that still achieves a minimum protection time. Have students plot mass versus protection time. You will want to determine in advance whether the washers and nuts are a mandatory or optional part of the TPS as removing them dramatically reduces the TPS mass.

Limiting Designs by Size

Students may find that a long thin TPS extending toward the flame will be very effective. However, it would be unrealistic for a spacecraft to employ a TPS that would significantly increase its size. You might add the challenge that the TPS be as small as possible. Alternatively, you may add the design constraint that the TPS must be “smaller than an egg” or “smaller than a lemon” or a similar object. You might also construct a box into which the TPS must fit before testing, similar to the box used for carry-on bags at the airport.

Designing on a Budget

One goal of the Constellation program is to have a low cost way of getting to space. This means that cost must be a design constraint in every aspect of the design.

Ask students to brainstorm about what NASA engineers must do to reduce the cost of getting to space. Since Ares models and posters are not yet available, holding up a model of the Space Shuttle or referring to a poster or images from the “Masters” section will be useful in stimulating student ideas. You might want to discuss such facts as how much fuel is used, which parts are reusable, which are not, what needs to be done to prepare for launch, etc. Additional information on the vehicles is available at the Web sites listed in the “Resources” section, on Page 57. Possible answers include: Make sure all the parts can be reused, make the vehicle lighter so it uses less fuel, use less expensive materials, make it more durable so you do not need to do much to it to prepare for the next launch, make a better engine that uses less fuel, make the engine more powerful so you can carry more on a single launch, use less

expensive fuel. Students are less likely to come up with ideas for cutting costs such as designing faster and testing more efficiently.

Assign a cost to each material and start students with a set budget. Allow students to purchase materials. You may also attach a cost to testing each design. Students must stay under budget while designing the TPS. Compare designs from teams on the basis of protection time and cost. Have students find the ratio of cost to protection time for each design and plot the results on a graph. Create a scatterplot for the entire class.

Designing with Additional Materials

The brass screw, copper screen, and aluminum foil have been chosen for their high conductive ability. This keeps the protection time fairly low and avoids long waits during testing, which can adversely affect student engagement. You may wish to experiment with materials that are more heat resistant.

Vermiculite™ and Perlite™, available at gardening centers, are lightweight and highly heat resistant. These can be incorporated into a TPS by creating a bag of aluminum foil to hold the pellets or by affixing the pellets to the foil or copper screen using furnace cement. If you choose to use furnace cement, be especially careful with it, as it can be dangerous to the skin and eyes. We do not recommend using furnace cement unless your students are safety conscious.

Steel wire will allow students to design TPSs that stand away from the tip of the screw and dramatically increase the protection time. Wire provides an excellent opportunity to observe the effects of a long, thin conduction path.

If you are constraining designs by a budget, you will want to assign much higher costs to these materials.

Measuring Where the Heat is with a High Temperature Probe

If you have a high temperature probe, you can use it to show students where the hottest part of the flame is and how the heat travels from the flame.

10. Detailed Materials List

Propane Torch

Hardware stores carry these torches for home use. The brass burner (with fuel valve) screws onto a small propane bottle. The propane bottles come in two shapes. The traditional tall shape is approximately 3 inches (7.6 centimeters) in diameter by 10 inches (25.4 centimeters) tall. A newer shape is approximately 4 inches (10.2 centimeters) in diameter by 7 inches (17.8 centimeters) tall. The shorter bottle has advantages for this activity, but either will work fine. Once you are set up to use one type it would be difficult to rearrange the test stand to use the other type. A single bottle is likely to be sufficient for the entire activity, but it is important to have a spare (of the same type) on hand. These propane bottles cost about $3.00 each.

Before you buy a torch, check to see whether you can borrow (or already own) one. The main characteristic that makes one better than another is the ease of setting the flame to an appropriate and repeatable level; most of them are easy to adjust. The burner nozzle of this kind of torch is angled about 15° away from vertical, and this is an important feature. It means that when the glue melts, the TPS can drop away without falling into the flame.

After the torch has burned for several minutes, the burner will, of course, be hot. The correct way to extinguish the torch is to close the fuel valve, but take care that the valve is fully closed. It is possible for a very small flame to continue burning unnoticed. On the other hand, over-tightening the fuel valve will make it more difficult to adjust the flame level in the future. When you will not be using the torch for an hour or more, unscrew the torch from the propane bottle. If you have the dust cap that came with the propane bottle, keep it in place when the torch is not in use.

Hot-Melt Glue and Glue Pot (or Glue Gun)

A glue pot made for use with low-temperature hot-melt glue is a handy tool that works very well for building test assemblies. They are most widely used by people making arrangements of dried flowers. They are likely to be available at hardware and craft stores.

If you are not able to obtain a glue pot, you may use any kind of low-temperature glue gun and glue sticks that fit it, although extra attention is required. (See "Build the Test Assemblies," Pages 23-24.)

Basic Supplies

Dowels

Birch Dowels 1/4-inch diameter, 3 feet (0.9 meter) long
package of 50 — about $13.00.

These are just basic dowels that you might find at any hardware, lumber, or craft store. It is important to use 1/4 inch diameter. Any kind of wood will do; birch is common and inexpensive. Most of the dowels will need to be cut to 3-inch (7.6-centimeter) lengths to make test assemblies. A reasonable tolerance is +/- 1/8 inch (+/- 0.3 centimeter). It is a good idea to have some longer pieces available for other uses.

Screws

6-32 × 1 inch Brass Pan Head Phillips Machine Screws
package of 100 — about $6.00.

It is important to use #6 screws 1 inch long. #6 is a very common size easily found in hardware stores, and 32 threads per inch is the normal thread for a #6 screw. Brass is the recommended material because of its excellent thermal conductivity. You may substitute steel or zinc-plated steel, which will be easier to find and less expensive, but the protection times you measure will not be directly comparable with measurements made using brass screws. Do not use cadmium plated screws (which are no longer generally available) because heating cadmium in a flame could give off toxic vapor. Any kind of head style will do, although it would be better if they are all the same.

Nuts and Washers

You may use any type of nuts and washers, but here are some specifics:

- 6-32 Brass Hex Nuts, package of 100 — about $3.00.
- #6 Brass Flat Washers, package of 100 — about $2.00.

Copper Woven Wire Cloth (Screen Wire)

A standard weave is 16 by 16 (wires per inch in each direction). A wire diameter of .011 inch (.028 centimeter) is good. Copper screen wire is an excellent material because it retains a shape and is easier to mold than aluminum, brass, or bronze screen; however, it may be difficult to find. If you substitute another material, be sure that it is not treated with a lacquer or other coating that would smoke when heated. Aluminum, brass and bronze may be available.

Copper Woven Wire Cloth, 12-inch square (30.5-centimeter square) sheets — about $4.00 each.

Aluminum Foil

Basic household aluminum foil is just right for this activity. You might also want to have some heavy-duty foil on hand.

Optional Materials

Steel Wire

Hardware stores sell small packages of steel wire, and 28 to 32 gauge wire is a handy size that may be useful.

Aluminum Pie Plates

The thicker aluminum foil used in disposable pie plates and roasting pans can be fun to work with, but extra caution is required, because it is thick enough to pose a hazard of cutting or puncturing the skin.

Furnace Cement

A yogurt-cup-sized package of furnace cement will cost about $2.00 at a hardware store. It is irritating to the skin, and slow to dry, but it has excellent resistance to high temperatures and may come in handy.

Vermiculite™ and Perlite™

These are naturally occurring minerals with resistance to high temperature and insulating qualities. They are inexpensive and commonly used for gardening purposes. Because they are mainly available in granular form, they must be enclosed in an aluminum foil packet or bonded with furnace cement for use in these experiments.

Firebrick

Firebrick is made specifically for lining fireplaces and furnaces. It is easily cut with normal metal-working tools, but the dust is abrasive and should not be breathed. Protective masks should be used when cutting.

11. Resources

Engineering Design Challenges Web site
http://edc.nasa.gov

About Ares Launch Vehicles

Constellation Program: Ares V Cargo Launch Vehicle
http://www.nasa.gov/mission_pages/constellation/ares/aresV.html

Constellation Program: Ares I Crew Launch Vehicle
http://www.nasa.gov/mission_pages/constellation/ares/aresI.html

About the Space Shuttle

Space Shuttle
http://www.nasa.gov/mission_pages/shuttle/main/

NASA: Human Space Flight
http://spaceflight.nasa.gov/home/index.html

About the Space Shuttle Thermal Protection System

Shuttle Thermal Protection System (TPS)
http://www.centennialofflight.gov/essay/Evolution_of_Technology/TPS/Tech41.htm

Orbiter Thermal Protection System
http://www-pao.ksc.nasa.gov/kscpao/nasafact/tps.htm

About Thermal Protection Materials

Thermal Protection Materials and Systems Branch
Ames Research Center
http://asm.arc.nasa.gov/

About Engineering and Careers

www.discoverengineering.org

Aimed at inspiring interest in engineering among America's youth, the site is a vast resource. Among the many features is information on what engineers do and how to become one. Designed for students in grades six through nine, the site has links to games, downloadables, engineering societies, and other resources. One section, for example, lists several "cool" things tied to engineering, such as the mechanics of getting music from a compact disc to the ears, how to make a batch of plastic at home, and how to fold the world's greatest paper airplane.

Some Additional NASA Web Sites

The worldwide distribution center for NASA-produced multimedia materials
http://education.nasa.gov/edprograms/core/home/index.html

NASA Education
http://education.nasa.gov
A link to the many education resources provided by NASA

NASA home page
http://www.nasa.gov

Marshall Space Flight Center Home Page
http://www.nasa.gov/centers/marshall/home/index.html

Career Information

NASA Career Corner for Grades 5-8
http://www.nasa.gov/audience/forstudents/5-8/career/index.html

NASA Career Corner for Grades 9-12
http://www.nasa.gov/audience/forstudents/9-12/index.html

About Design Challenges

Dunn, Susan and Larson, Rob, *Design Technology: Children's Engineering*. 1990: Philadelphia, The Falmer Press.

Sadler, P., Coyle, H., and Schwartz, M., "Successful Engineering Competitions in the Middle School Classroom: Revealing Scientific Principles through Design Challenges," *The Journal of Learning Sciences*, V.9 No. 3, (2000) 299-327.

12. Masters: NASA Engineering Design Challenges

Thermal Protection Systems

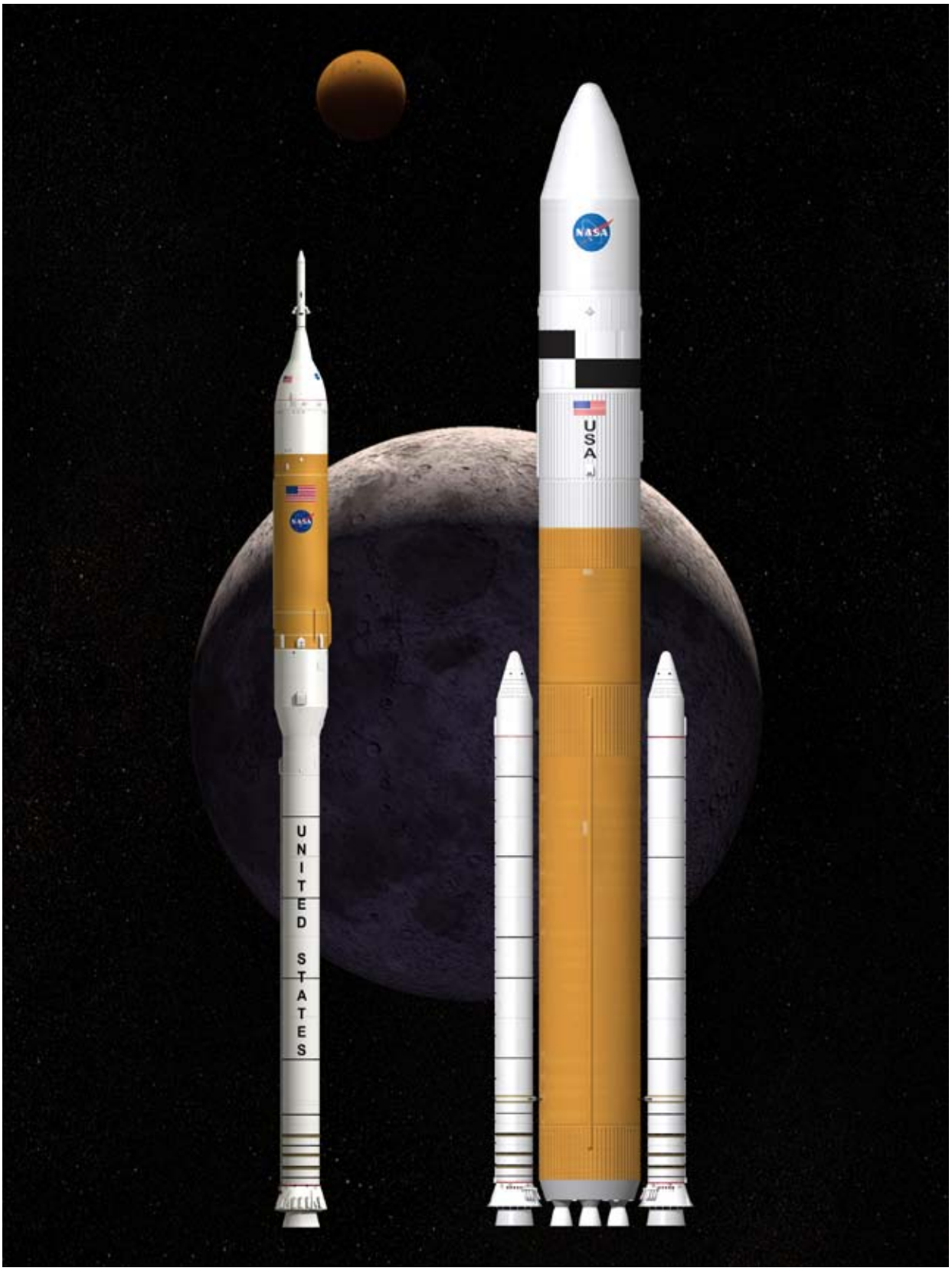

NASA Engineering Design Challenges

Dear Parent:

Your child is beginning an exciting unit, in science class, entitled the NASA Engineering Design Challenge. This unit will connect students with the work of NASA engineers by engaging them in a related design challenge in their classroom. Students will design, build, and test their own solutions to a design problem similar to one faced by NASA engineers.

Ares I

Thermal Protection Systems

NASA is currently designing and developing the next generation of space transportation vehicles, the Ares launch vehicles, which will one day replace the Space Shuttle as a way to put people and satellites into orbit and help transport them to the Moon and eventually to Mars. The Ares launch vehicles are being designed at Marshall Space Flight Center in Huntsville, Alabama. One challenge faced by designers of the Ares rockets is how to protect the vehicle from the heat of friction as they fly through the atmosphere at high speeds during launch. Another challenge is to protect the rockets from the heat of their own engines. The tremendous heat caused by friction with the Earth's atmosphere must be kept from reaching the skin of the spacecraft. This is the purpose of a "thermal protection system:" to protect the launch vehicles in these situations.

The Challenge

Your child's challenge in class is to build a thermal protection system for a small object. He/she will use such common materials as nuts, washers, screening, and aluminum foil to build a protective shield that will protect the object from heat. The design will be tested and then the student will have the opportunity to revise the design based on the test results. Designs will go through a number of revisions to try to improve the amount of time the object is protected. As a culminating activity, students will create posters documenting their design process and results.

Questions to Ask Your Child About the Project

This is an inquiry-based activity. This means that much of your child's learning depends on hands-on experimentation. It is important, however, that your child reflects on the hands-on work and tries to understand why certain design features were or were not successful. You can encourage this reflection by asking your child to:

- Explain the challenge and the design constraints.
- Describe the design and how it survived the testing.
- Explain why the design did or did not work well.
- Explain whether other students in the class tried different designs and how those designs tested.
- Explain the next design and why it will be an improvement.

Some Activities to Do at Home

There are many examples around home of thermal protection systems in action.

- Winter clothing (such as coats, mittens, and hats) is designed to prevent the loss of body heat. Discuss whether the clothes create heat or just retain the body's heat.
- Cooking provides a way to examine the thermal properties of materials. Look for the following:
  - Pot holders: Cloth potholders contain a layer of insulating material.
  - Cooking utensils: When stirring hot food, what kind of utensil do you use? Wood is a poor conductor, so the heat from hot food does not easily travel up a wooden spoon to your hand. Metal is a good conductor, it heats up quickly when placed in hot food.
  - Pots and pans: What are your pots and pans made of? Do they have a different type of metal on the bottom? Is the bottom thicker than the sides? Aluminum and copper are popular materials for cooking pots because they are good conductors. Do the handles of your pots get as hot as the pots or do they stay cooler? What are the handles made from? How are they attached?
- Fans: Moving air carries heat away from hot objects by conduction and convection. When the air contacts the hot surface, heat moves by conduction from the hot surface to the air molecules. When the air moves away from the hot surface, it takes the heat with it. When heat is carried away by a moving gas or liquid it is called convection.
- Double or triple pane windows: Air is a good insulator that can protect your house from hot weather in the summer and cold in the winter. The air pocket trapped between the two panes of glass (some windows have two air pockets and three panes) prevents heat from passing through the window in either direction. Air serves as an insulator.
- Deep eaves: Roofs with large overhangs serve to keep a house cooler because they shade the house and prevent the radiant heat energy from the sun from reaching the walls and windows of the house. Heat energy from the sun is called radiation or radiating heat. Radiating heat can pass through empty space, air, and other transparent media such as glass. But radiating heat can not pass through opaque materials such as the roof of a house. Instead the roof absorbs the heat energy. If the roof is a light color, it will reflect some of the radiation as well.
- Fiberglass blankets: Check your hot water tank or your water pipes if they are visible. Wrapping a tank or pipe in a fiberglass blanket prevents heat from hot water pipes from escaping into the air. If you discover asbestos wrapping, do not disturb it.
- Insulation: The walls of your home probably have some type of insulation such as fiberglass batting, rigid foam boards, or blown-in insulation like cellulose. All of these materials are good insulators because they trap many air pockets in them to make it difficult for heat energy to pass through by conduction or convection.
- Thermal bottles: Contain a double-walled container with a vacuum between the two walls. Heat does not travel easily through a vacuum. Another space between the bottle and the outer covering also prevents heat from passing through because air is a good insulator. The inner surface of the bottle is mirrored to reflect heat inward.

Ares V

Resources for Further Exploration

Engineering Design Challenges Web site
http://edc.nasa.gov

About Ares Launch Vehicles

Constellation Program: Ares V Cargo Launch Vehicle
http://www.nasa.gov/mission_pages/constellation/ares/aresV.html

Constellation Program: Ares I Crew Launch Vehicle
http://www.nasa.gov/mission_pages/constellation/ares/aresI.html

About the Space Shuttle

Space Shuttle
http://www.nasa.gov/mission_pages/shuttle/main/

NASA: Human Space Flight
http://spaceflight.nasa.gov/home/index.html

About the Space Shuttle Thermal Protection System

Shuttle Thermal Protection System (TPS)
http://www.centennialofflight.gov/essay/Evolution_of_Technology/TPS/Tech41.htm

Orbiter Thermal Protection System
http://www-pao.ksc.nasa.gov/kscpao/nasafact/tps.htm

About Thermal Protection Materials

Thermal Protection Materials and Systems Branch
Ames Research Center
http://asm.arc.nasa.gov/

About Engineering and Careers

www.discoverengineering.org
Aimed at inspiring interest in engineering among America's youth, the site is a vast resource. Among the many features is information on what engineers do and how to become one. Designed for students in grades six through nine, the site has links to games, down-loadables, engineering societies, and other resources. One section lists several "cool" things tied to engineering, such as the mechanics of getting music from a compact disc to the ears, how to make a batch of plastic at home, and how to fold the world's greatest paper airplane.

Some Additional NASA Web Sites

The worldwide distribution center for NASA-produced multimedia materials
http://education.nasa.gov/edprograms/core/home/index.html

NASA Education
http://education.nasa.gov
A link to the many education resources provided by NASA

NASA home page
http://www.nasa.gov

Marshall Space Flight Center Home Page
http://www.nasa.gov/centers/marshall/home/index.html

Engineering Design Challenges Web site
http://edc.nasa.gov

Career Information

NASA Career Corner for Grades 5-8
http://www.nasa.gov/audience/forstudents/5-8/career/index.html

NASA Career Corner for Grades 9-12
http://www.nasa.gov/audience/forstudents/9-12/index.html

About Design Challenges

Dunn, Susan and Larson, Rob, *Design Technology: Children's Engineering*. 1990: Philadelphia, The Falmer Press.

Sadler, P., Coyle, H., and Schwartz, M., "Successful Engineering Competitions in the Middle School Classroom: Revealing Scientific Principles through Design Challenges," *The Journal of Learning Sciences*, V.9 No. 3, (2000) 299-327.

Ares I and Ares V

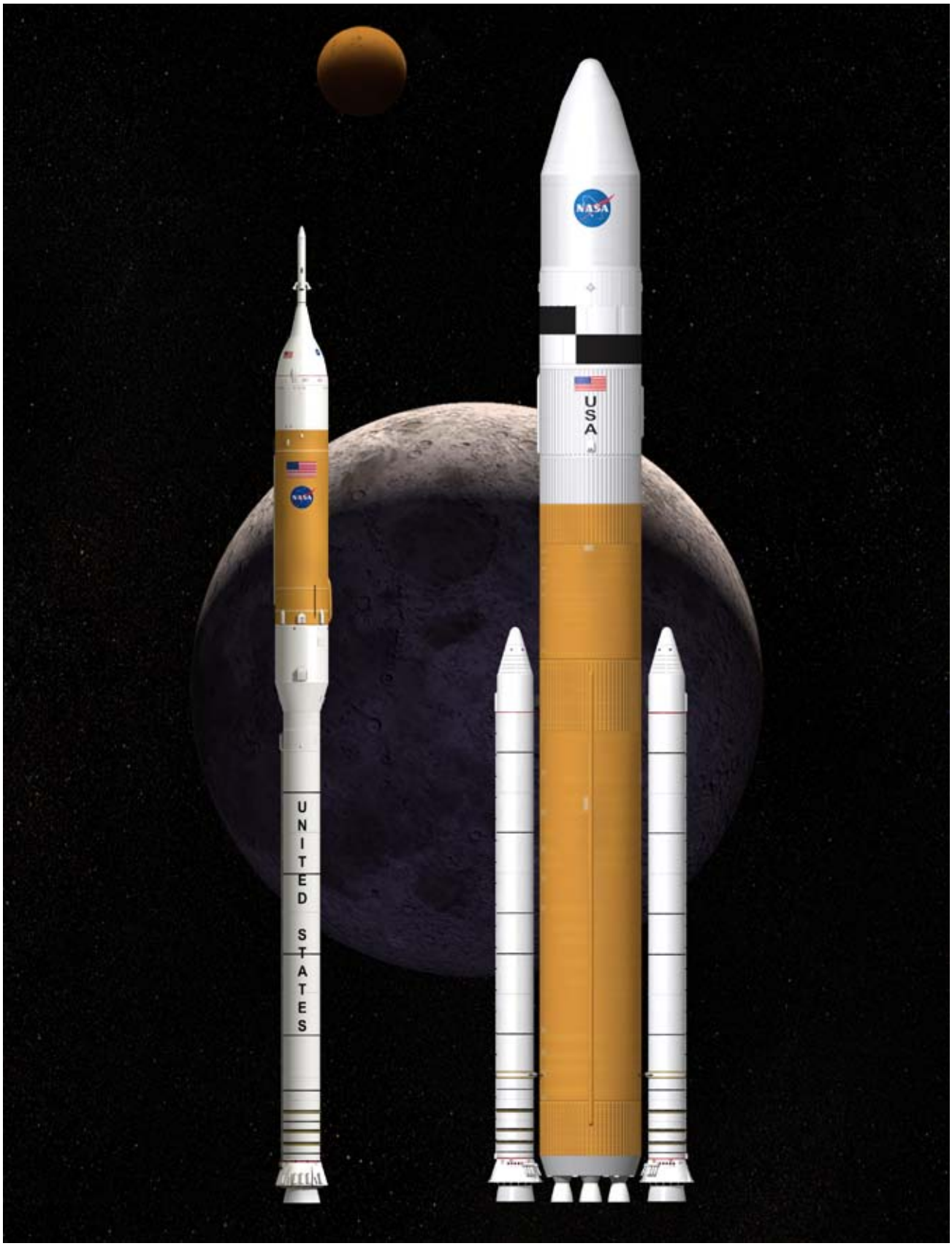

Ares I

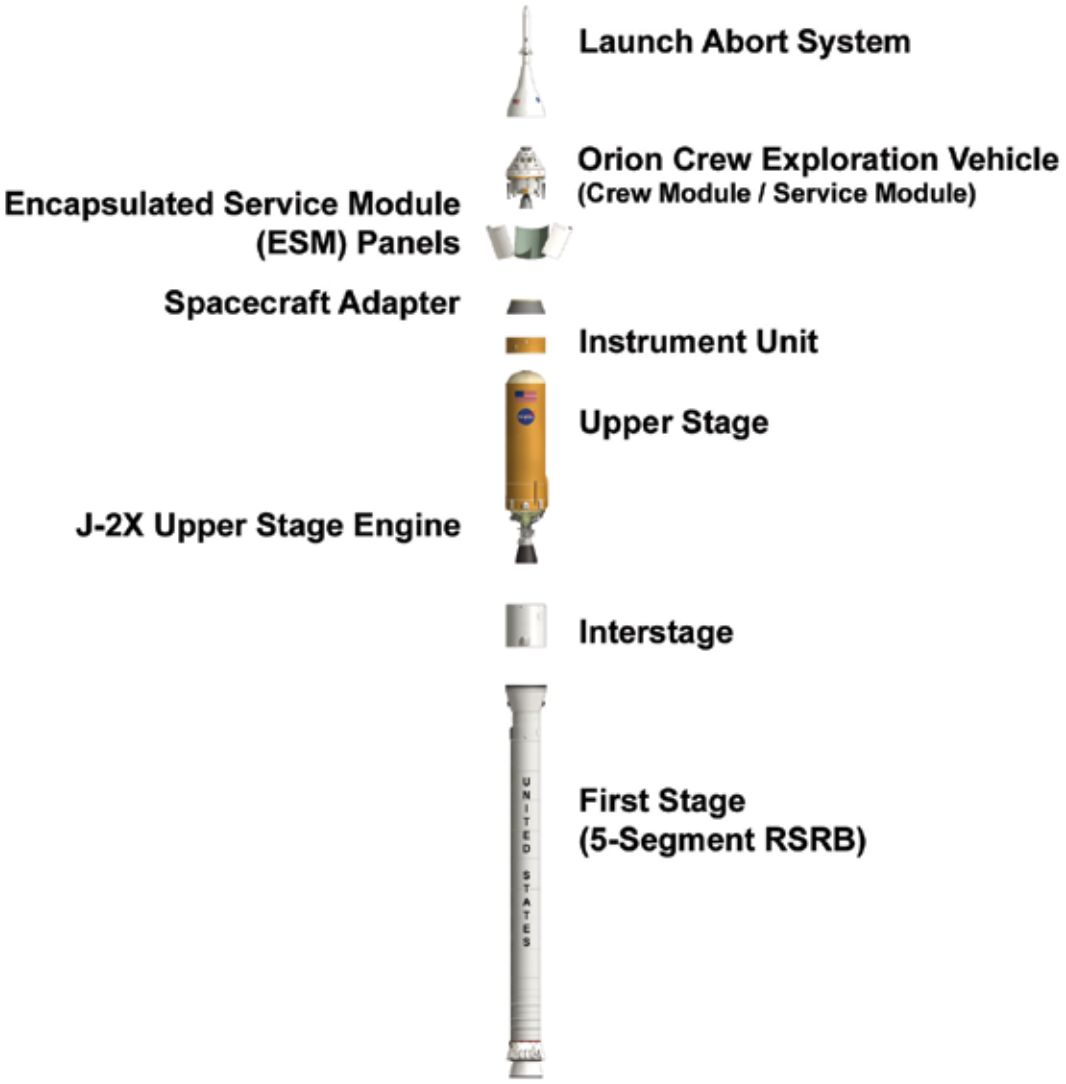

Ares I
52k lbm to LEO

Ares V

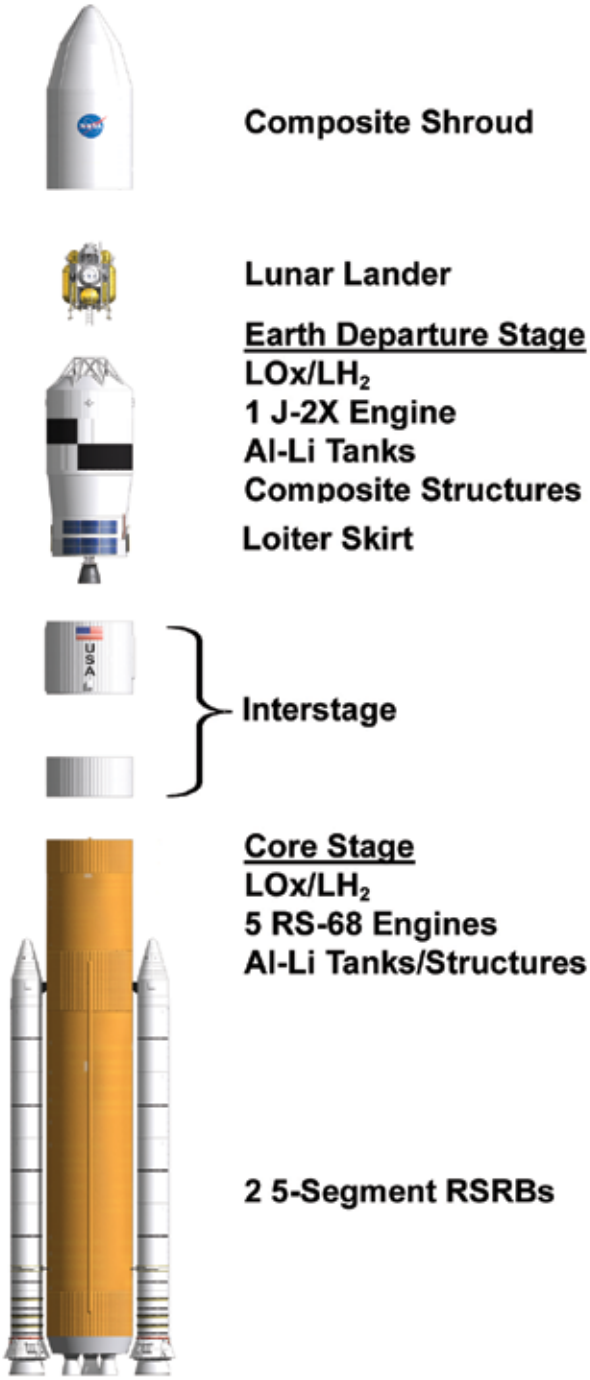

Ares V

143k lbm to TLI in
Dual-Launch Mode with Ares I
284 lbm to LEO

Base of Ares V

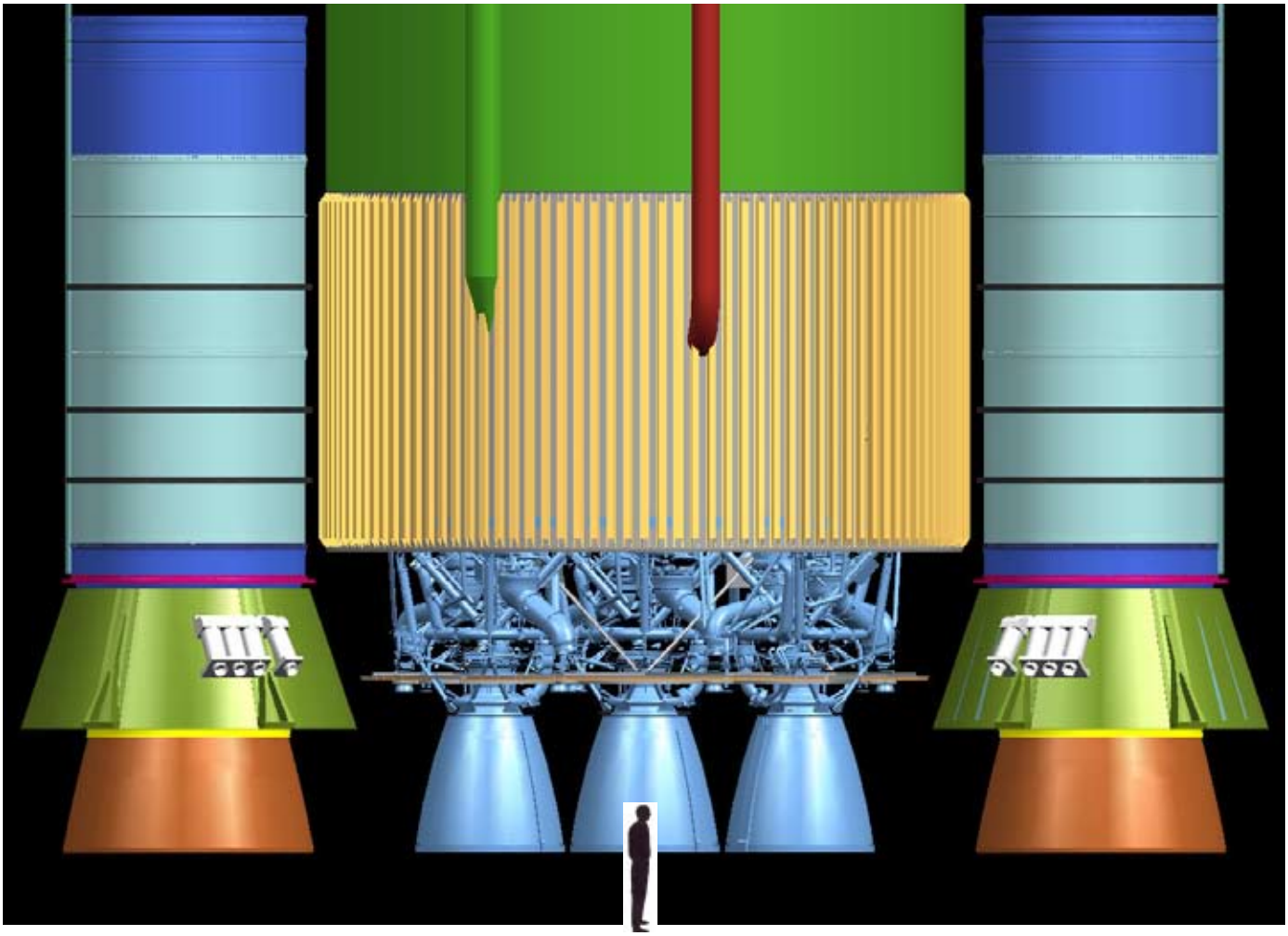

This silhouette of a 6 foot 2 inch (1.9 meter) man gives a sense of the size of the Ares V launch vehicle. The tapered enclosure around the fuel lines is not shown in this image. Only three of the five liquid fuel engine nozzles are visible at this angle. The solid rocket boosters straddle the core of Ares V.

Ares V TPS at Base

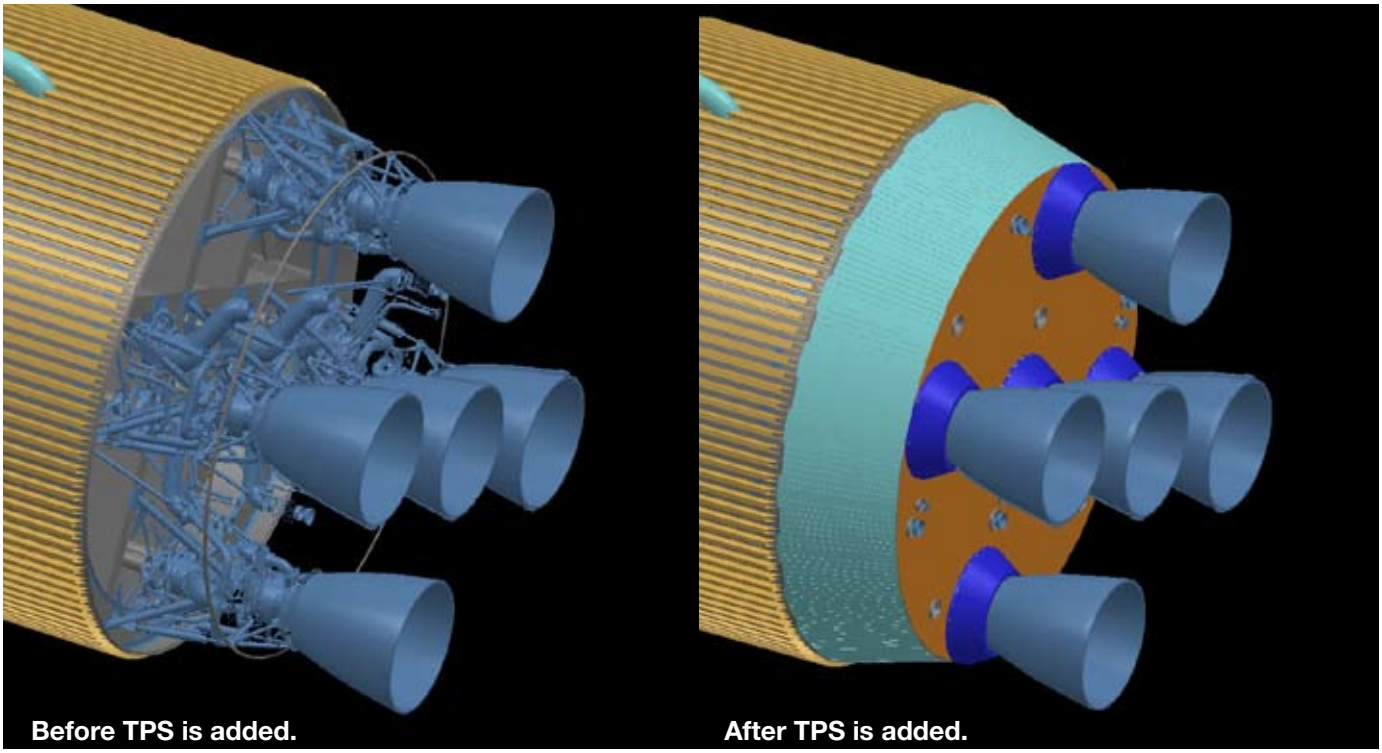

Shuttle Launch

NASA Engineering Design Challenges

The Challenge:
Using the specified materials, build a “thermal protection system” (TPS), that protects the model for the longest possible time.

Design Constraints:

- Use only the specified materials to construct the TPS.
- No glue may be used in the TPS itself.
- No part of the TPS may touch the dowel.
- No part of the TPS may touch the glue.

The TPS Test Assembly

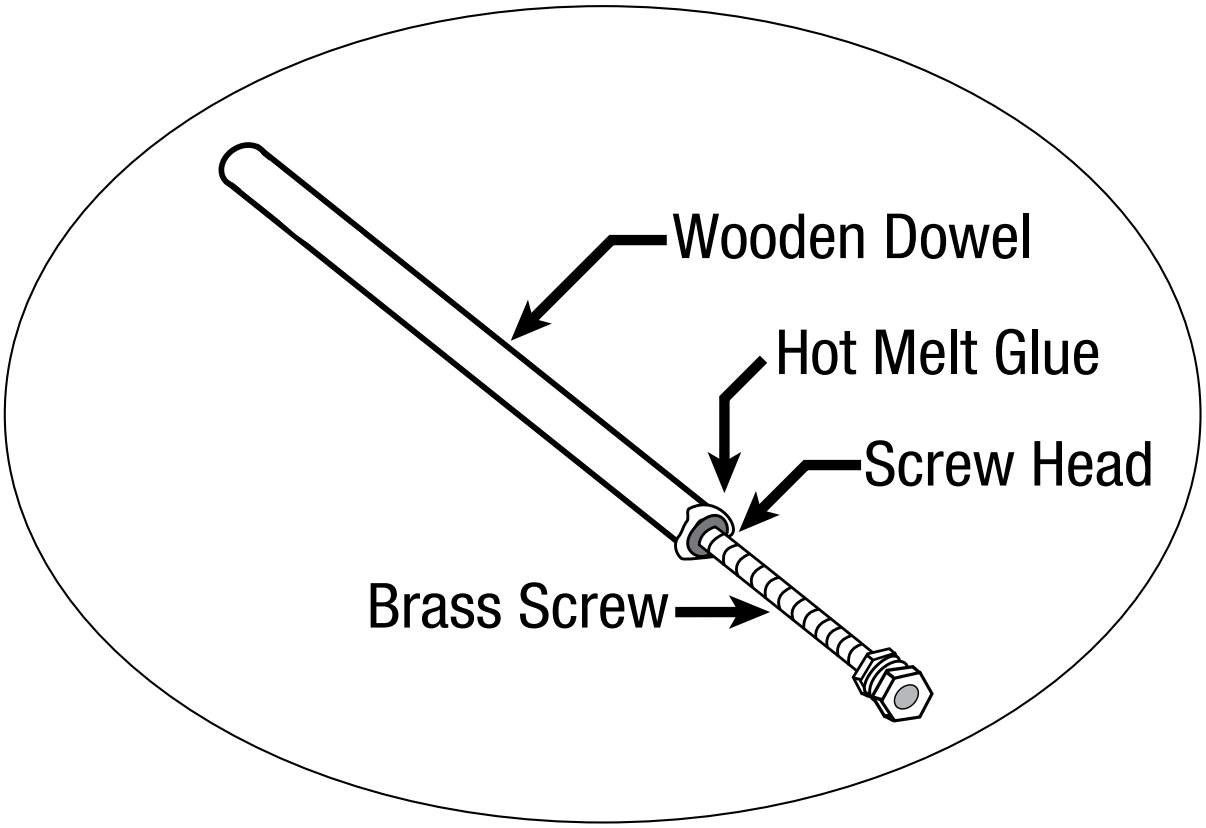

The TPS Test Stand

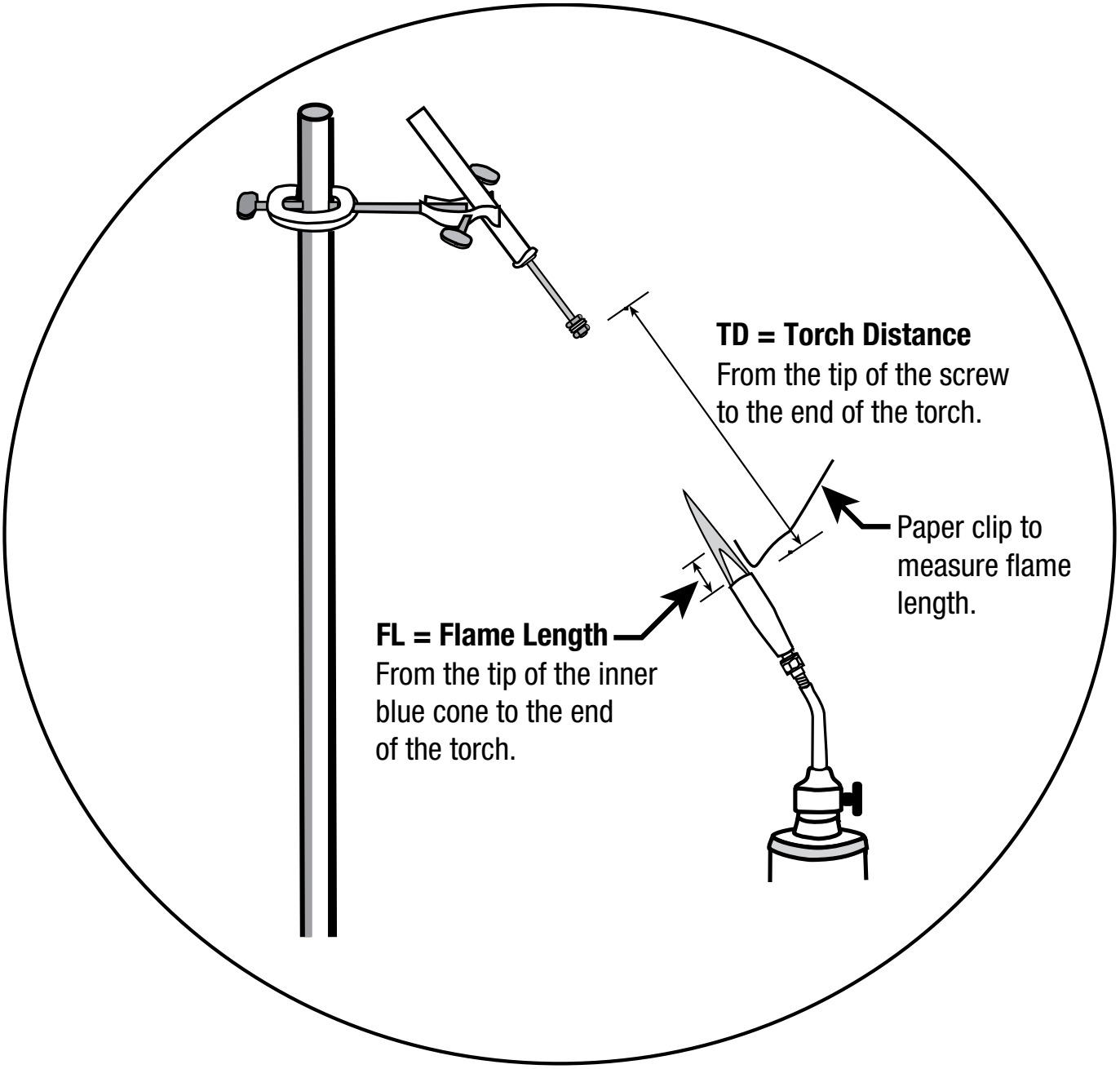

Using the TPS Test Stand

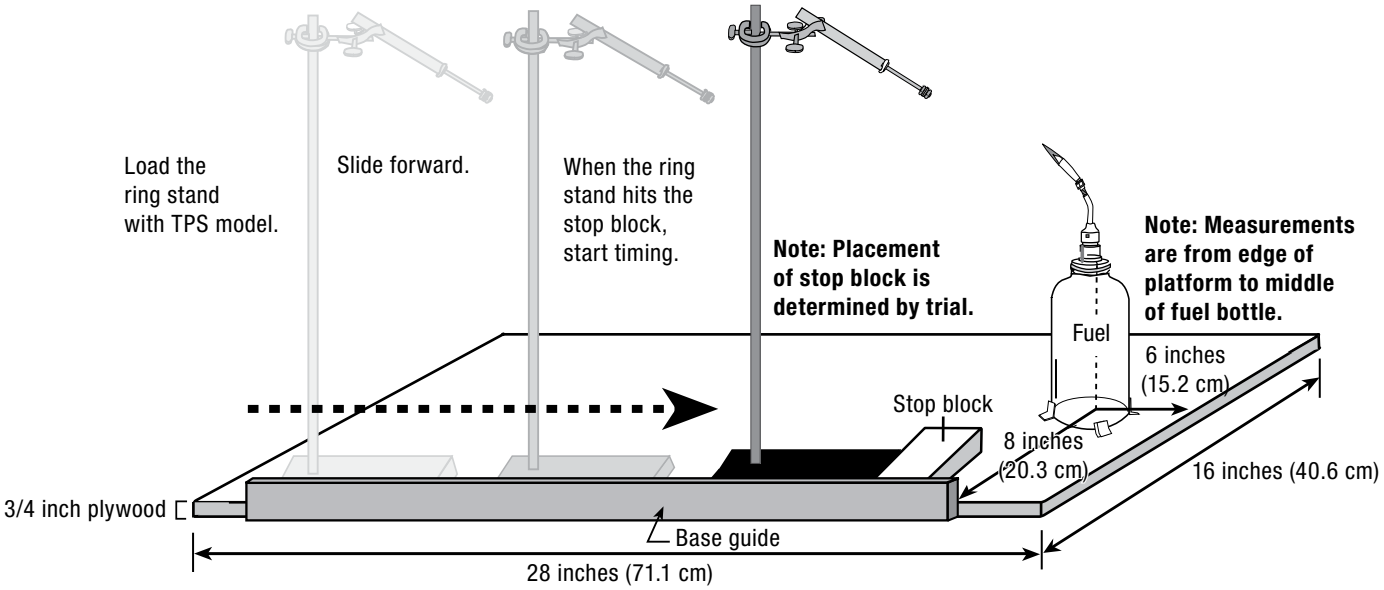

Alignment Fixture

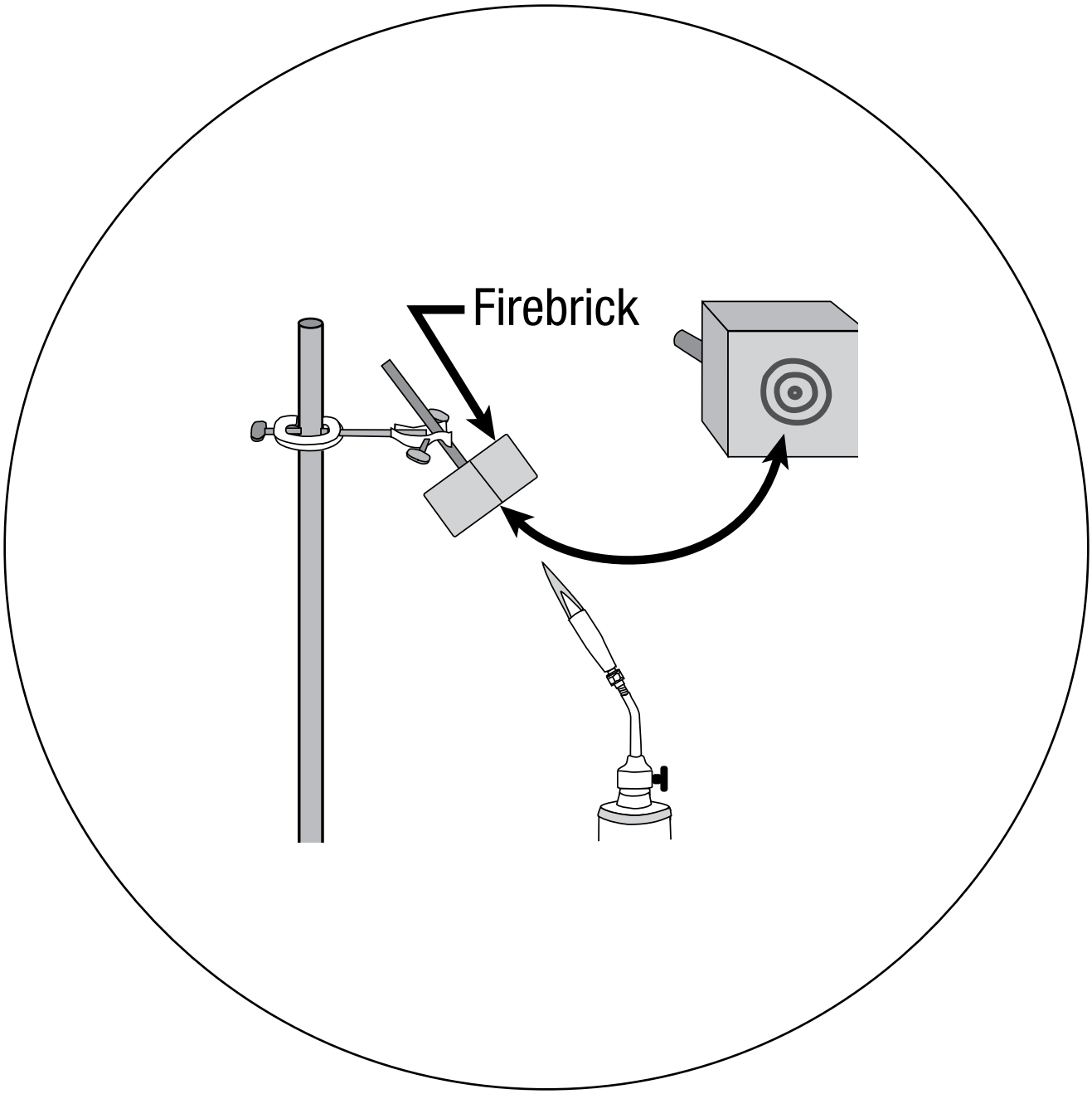

Relationship of the TPS Model to a Spacecraft

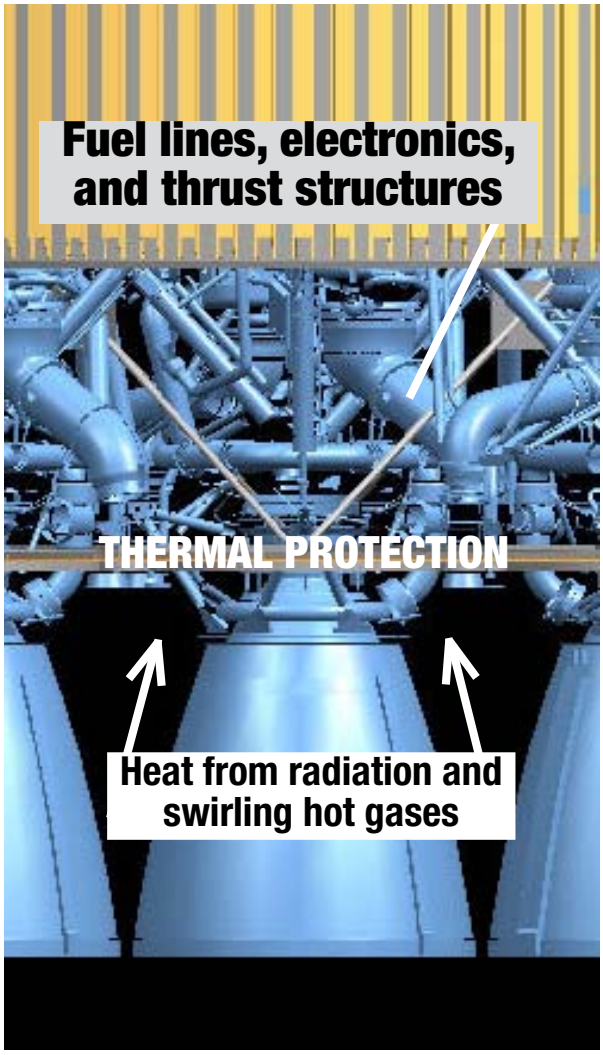

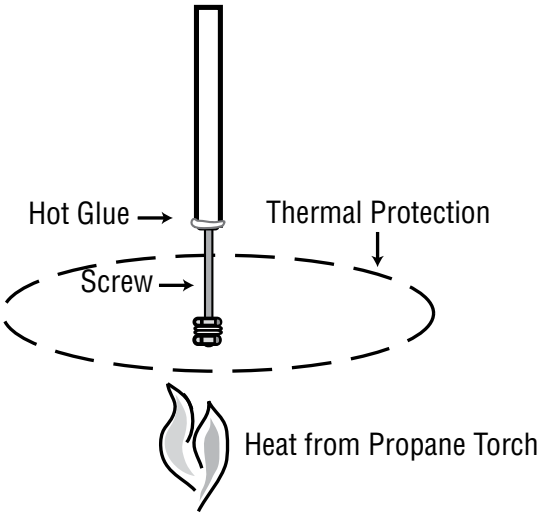

The Design Process

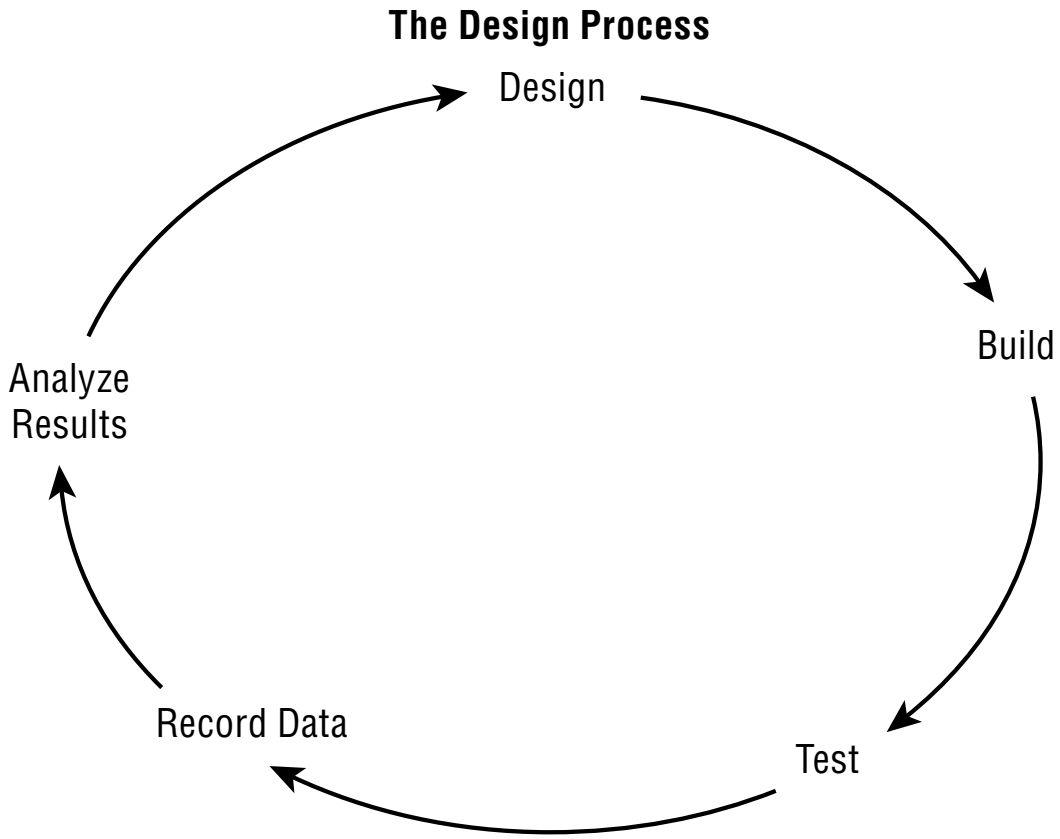

Design Number	Protection Time in seconds

TPS Design Specifications and Test Results Sheet

Date: _____ Class: _____ Team: _____

Designer Names: _____

Sketch your design below. Check that you have drawn and labeled the following:

☐ Dowel ☐ Screw ☐ Glue joint ☐ Hex nuts ☐ Washers ☐ Other materials

Describe the key features of your design:

_____

_____

_____

_____

_____

_____

_____

Describe what happened during the test:

_____

_____

_____

_____

_____

_____

_____

NASA Engineering Design Challenge.....

National Aeronautics and Space Administration

George C. Marshall Space Flight Center
Huntsville, AL 35812
www.nasa.gov/marshall

www.nasa.gov

8-426609b