STS-125

FD 07 Execute Package

MSG	Page(s)	Title
049A	1 - 14	FD07 Flight Plan Revision **(pdf)**
050	15 - 16	FD07 Mission Summary **(pdf)**
051	---	FD06 MMT Summary **(pdf - Electronic Only)**
052	17	FD07 IMAX Notes **(pdf)**
053	18 - 19	Good Suggestions for EMU Sizing Issues **(pdf)**
054	20	FD07 Crew Choice D/L Opportunities **(pdf)**

Approved by FAO: *Jennifer Clevenger*

Last Updated: May 17 2009 9:10AM GMT
JEDI *(**J**oint **E**xecute package **D**evelopment and **I**ntegration), v2.04.0003*

MSG INDEX

MSG NO.	TITLE
049	FD07 Flight Plan Revision
050	FD07 Mission Summary
051	FD06 MMT Summary
052	FD07 IMAX Notes
053	Good Suggestions for EMU Sizing Issues
054	FD07 Crew Choice D/L Opportunities

1. Post Sleep Cryo Config
   R1 O2,H2 MANF VLV TK2 (two) - OP (tb-OP)

2. MSG 053 has recommendations for Bueno's EMU/LCVG sizing.

3. Airlock Depress Valve Cap Check
   During Step 3 of EMU PREBREATHE, check the inner threads of the Airlock Depress Valve cap and report if the cap has damaged or worn-out threads.

4. Although Bay 8 MLI has degraded, no changes to NOBL installation procedure are required. If MLI migrates to the radiator surface, please report MLI size and expected ease of removal. The following methods may be used to remove MLI if required:
   a) Pull MLI off by hand (preferred method.) Incidental glove contact is acceptable, but should be minimized.

   b) Use EVA wipe to remove MLI using light contact. Prestage wipe in airlock or on tool handle per your preference.

   c) Use the Connector Cleaner Tool to blow away MLI. Leave tool stowed in HST Tool Bag until needed.

5. MSG 052 has some notes for you on mitigating fog on the ICBC and some notes on today's scenes.

6. Simo Dump Details
   For the simo dump, MCC will TMBU the limits in steps B and K. The supply water portion of the dump will be 90 minutes. The waste water portion of the dump will be ~35 minutes and will dump the waste tank to 5%.

7. Please make the following pen & ink changes to the EVA 5 (EVA, TOOL CONFIG), (FS 7-110) and EVA 5 (EVA, POST TOOL CONFIG), (FS 7-111)
   - Add CMTL to MFR HANDLE, report location.

8. Due to a scheduling conflict between EMU Water Recharge in Post EVA and the Supply Waste Dump we will not be able to determine the amount of water filled and ullage dumped from shuttle tank quantities. The EMU H2O WP provides confirmation of a good fill. Therefore make the following changes to POST EVA, (EVA, POST EVA).

   EMU WATER RECHARGE
   Skip steps 34-36, & 38

   WATER FILL VERIFICATION
   Skip steps 47-49

9. REPLACE PAGES 2-14 THROUGH 2-15 AND 3-68 THROUGH 3-77.

GMT 05/17/09 (137)
β = −8
MET Day 005

12 13 14 15 16 17 18 19 20 21 22 23 006/00
07 08 09 10 11 12 13 14 15 16 17 18

STS-125

CDR/R1 ALTMAN	SLEEP; LOG; POST SLEEP; PMC A/G; 10.2M; POST SLEEP; R5R#; G2EXP; ROT*; MCIU; EVA SETUP; RMS STIS SUPPORT
PLT JOHNSON	SLEEP; POST SLEEP*; BATT*; EVA PREP; HL/PGT; P/TV06 S/U; P/TV03 ROTATE & DPRS; +V2 SURVEY; REBA-T; ICBC5; P/TV06; EVAS4; ICBC14; P/TV06 EVA 4 OPS
MS1/EV4 GOOD	SLEEP; ASPRN; POST SLEEP; EVA PREP; PURGE; EMU PRE BREATHE; DPRS; PDPS; EGRESS & SETUP; STIS REPAIR
MS2/R2 McARTHUR	SLEEP; LOG; POST SLEEP*; OCA#; POST SLEEP; EXERCISE; ROT*; SUNRS; SUNSET; PRCT; SUNRS; PRCT; SUNSET; PRCT; SUNRS; PRCT; SUNSET
MS3/EV1 GRUNSFELD	SLEEP; ASPRN; POST SLEEP; EVA PREP; PURGE; EMU PRE BREATHE; DPRS; PDPS; EXERCISE; IVA EVA 4 SUPPORT
MS4/EV3 MASSIMINO	SLEEP; ASPRN; POST SLEEP; EVA PREP; PURGE; EMU PRE BREATHE; DPRS; PDPS; EGRESS & SETUP; STIS REPAIR
MS5/EV2 FEUSTEL	SLEEP; ASPRN; POST SLEEP; EVA PREP; PURGE; EMU PRE BREATHE; DPRS; EVA 4 (6:30); IVA EVA 4 SUPPORT; STIS/NOBL 8

HST

HST CMD	SSR ENGNR PLAY BACK; STIS*; STIS A/T

STS

DAY/NIGHT	
ORBIT	85; 86; 87; 88; 89; 90; 91; 92
TDRS W	
TDRS E	
TDRS Z	
ORB ATT	-ZLV -XVV; SUN PROTECT

HST

HST FWD AXIS	-V3 FWD; +V2 FWD
SA ANGLE	0 deg

NOTES

*HUM SEP
*CHECK
#CH 2
#RESELECT
*+V2
*PWR DN

+V2 AFT SHROUD DOOR OPEN

GMT 05/17/09 (137) β=-7 MET Day 006

006/00 | 19 01 | 20 02 | 21 03 | 22 04 | 23 05 | 05/18 06 | 01 07 | 02 08 | 03 09 | 04 10 | 05 11 | 06 12

STS-125	CDR/R1 ALTMAN	♣ / RMS NOBL 8 SUPPORT / MFR EGRS / PARK / ROT FSS TO +V3 / EXERCISE / G2CON / MNVR* / EVA 5 PROCEDURE RVW / PRE SLEEP / R5R^ / PMC A/G / PRE SLEEP / 10.2M / SLEEP
STS-125	PLT JOHNSON	P/TV06 EVA 4 OPS / P/TV05 +V2 SURVEY / P/TV 03 FSS ROT / MNVR / SIMO / 10.2M / P/TV05 +V3 SURVEY / HLP/PTGT / BLANTT / WCS# / ICDBTCV / G1+ / EVA 5 PROCEDURE RVW / PRE SLEEP / BATT# / PRE SLEEP / SLEEP
STS-125	MS1/EV4 GOOD	STIS / REPAIR / NOBL 8 / CLOSEOUT & INGRESS / PRPS / RPRS / POST EVA W/H2O / LIOHT& / BLANTTL / EMU SWAP / REBA-I / PRE / EVA 5 PROCEDURE RVW / PRE SLEEP / SLEEP
STS-125	MS2/R2 McARTHUR	-ZLV -XVV / ROT FSS TO +V3 / SIMO INIT / WASTE / TERM / SPLY / TERM / EVA 5 PROCEDURE RVW / PRE SLEEP / PDIP+ / PRE SLEEP / SLEEP
STS-125	MS3/EV1 GRUNSFELD	IVA EVA 4 SUPPORT / PRPS / RPRS / POST EVA W/H2O / BATT* / LIOHT& / BLANTTL / EMU SWAP / REBA-I / D2X / EVA 5 PROCEDURE RVW / PRE SLEEP / SLEEP
STS-125	MS4/EV3 MASSIMINO	STIS / REPAIR / NOBL 8 / CLOSEOUT & INGRESS / PRPS / RPRS / POST EVA W/H2O / EVA 5 TOOL CONFIG / PRE / SLEEP / EVA 5 PROCEDURE RVW / PRE SLEEP / SLEEP
STS-125	MS5/EV2 FEUSTEL	⊕ / EXERCISE / IVA SPRT / RPRS / POST EVA W/H2O / EVA 5 TOOL CONFIG / EVA 5 PROCEDURE RVW / PRE SLEEP / OCA* / PRE SLEEP / SLEEP
HST	HST CMD	STIS F/T & SAFE / PSEA / STIS F/T DUMP / ACS / SSR ENGNR PLAY BACK / BAY3 / BAY 3 BATT DISCHARGE
STS	DAY/NIGHT	
STS	ORBIT	92 / 93 / 94 / 95 / 96 / 97 / 98 / 99
STS	TDRS W E Z	
STS	ORB ATT	MNVR / -ZLV -XVV / -ZLV +YVV / MNVR / -ZLV -XVV
HST	HST FWD AXIS	+V2 FWD / +V3 FWD
HST	SA ANGLE	0 deg
	NOTES	♣RMS STIS SUPPORT ⊕IVA EVA 4 SUPPORT *TERM *-ZLV -XVV #COMPACT +BLK IMAGE DNLK ^DESELECT #INIT +OFF *PL MAX

STS-125 (FD07)

REPLANNED

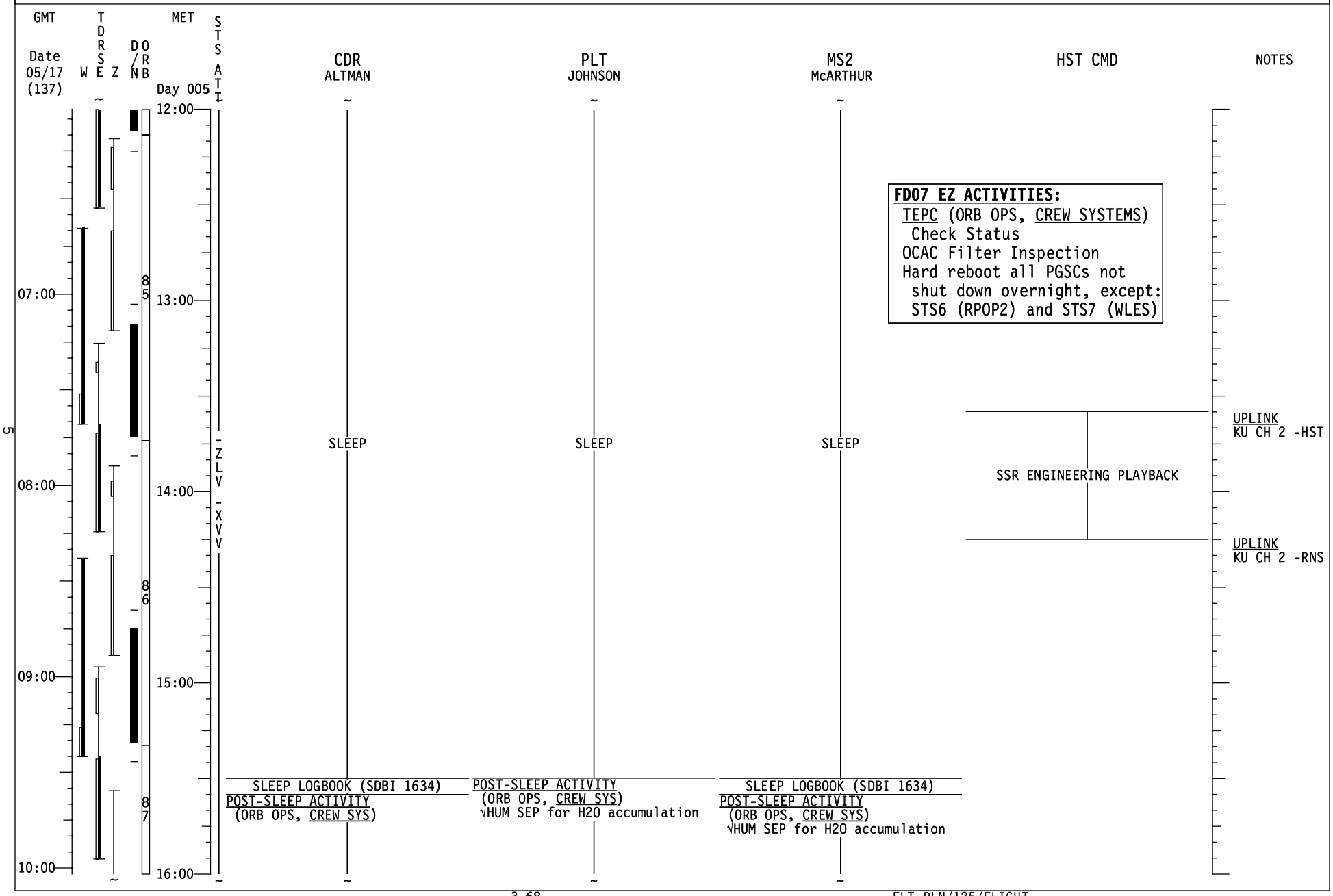

STS-125 (FD07)

REPLANNED

GMT Date 05/17 (137) | W | T D R S E | Z | D/N | O R B | MET Day 005 | STS ATT

MS1 GOOD | MS3 GRUNSFELD | MS4 MASSIMINO | MS5 FEUSTEL | NOTES

07:00 — 08:00 — 09:00 — 10:00

12:00 — 13:00 — 14:00 — 15:00 — 16:00

85 — 86 — 87

-ZLV -XVV

SLEEP | SLEEP | SLEEP | SLEEP

EVA CREW: TAKE 1 ASPIRIN (325mg)
POST-SLEEP ACTIVITY
(ORB OPS, CREW SYS)

EVA CREW: TAKE 1 ASPIRIN (325mg)
POST-SLEEP ACTIVITY
(ORB OPS, CREW SYS)

EVA CREW: TAKE 1 ASPIRIN (325mg)
POST-SLEEP ACTIVITY
(ORB OPS, CREW SYS)

EVA CREW: TAKE 1 ASPIRIN (325mg)
POST-SLEEP ACTIVITY
(ORB OPS, CREW SYS)

STS-125 (FD07)

REPLANNED

GMT Date 05/17 (137) | W E Z | D/N O R B | MET Day 005 | STS ATT

CDR ALTMAN

16:00
POST-SLEEP ACTIVITY
(ORB OPS, CREW SYS)

O6 √UHF MODE - OFF
L9 PAYLOAD STATION AUDIO A/G (two) - OFF
PRIVATE MEDICAL CONFERENCE
MO10W √O2 REG INLET SYS 1 - CL
10.2 PSI MAINTENANCE
(EVA, 10.2 PSI CABIN) Step 3 only
POST-SLEEP ACTIVITY
(ORB OPS, CREW SYS)

17:00

18:00

R5R RESELECT [A]
G2 SET EXPANSION (ORB OPS, DPS)
Configure Dual G2, (1212)
ROTATE HST (-V3 to +V2)
(PL OPS, IN-BAY OPERATIONS)
L17 Check MCIU filter screen

19:00

DAILY SETUP
(PDRS, EVA SETUP)

STIS
(PDRS, EVA 4)

20:00

PLT JOHNSON

POST-SLEEP ACTIVITY
(ORB OPS, CREW SYS)
√HUM SEP for H2O accumulation

√EMU Battery charging
EVA PREP
(EVA, EVA PREP)
Ref. MSG 053

HELMET LIGHT/PGT BATT RCHRG(Term)
(EVA, EMU MAINT/RECHARGE)
P/TV06 HST EVA
(P/TV, SCENES)
SETUP

P/TV03 FSS OPS (SETUP & OPS)
(P/TV, SCENES)
Rotate & Depress - Items 2 & 4

P/TV05 HST SURVEY (OPS) [B]
(P/TV, SCENES) +V2 Survey -
Items 10 (ASD pg. FS 1-59) & 12
REBA BATTERY RECHARGE (TERM)
(EVA, EMU MAINT/RECHARGE)
P/TV09 ICBC3D (FILMING OPS)
(P/TV, SCENES) Scene 5 Ref. MSG 052
P/TV06 HST EVA (OPS)
(P/TV, SCENES)
EVA 4 - Items 1,11,12

MS2 McARTHUR

POST-SLEEP ACTIVITY
(ORB OPS, CREW SYS)
√HUM SEP for H2O accumulation

L10 MUX/VTR/CC PWR - ON (LED ON)
RECONFIGURE OCA D/L RATE (Ch. 2)
(ORB OPS, PGSC)
Part D then A, omit Step 4
POST-SLEEP ACTIVITY
(ORB OPS, CREW SYS)

EXERCISE

ROTATE HST (-V3 to +V2)
(PL OPS, IN-BAY OPERATIONS)

MNVR (TRK) BIAS +ZVV (SR Protect)
TG=2 BV=5 P=142 Y=12 OM=15
A10/AUTO/VERN (5/19:56) Init TRK

HST CMD

[A] GNC 23 RCS
CRT RCS R - ITEM 3 EXEC (*)
JET DES R5R - ITEM 37 EXEC (no*)

[B] When complete, load image card into PGSC and notify MCC

NOTES

UPLINK
PDI FDA -ENA

UPLINK
β21 + Mask
Boxes 1,2,3,4

STS-125 (FD07)

REPLANNED

GMT Date 05/17 (137) | W | TDRSE | Z | D/N | ORB | MET Day 005 | STS ATI | MS1 GOOD | MS3 GRUNSFELD | MS4 MASSIMINO | MS5 FEUSTEL | NOTES

MS1 GOOD	MS3 GRUNSFELD	MS4 MASSIMINO	MS5 FEUSTEL
POST-SLEEP ACTIVITY (ORB OPS, CREW SYS)	POST-SLEEP ACTIVITY (ORB OPS, CREW SYS)	POST-SLEEP ACTIVITY (ORB OPS, CREW SYS)	POST-SLEEP ACTIVITY (ORB OPS, CREW SYS)
EVA PREP (EVA, EVA PREP) Ref. MSG 053	EVA PREP (EVA, EVA PREP) Ref. MSG 053	EVA PREP (EVA, EVA PREP) Ref. MSG 053	EVA PREP (EVA, EVA PREP) Ref. MSG 053
EMU PURGE (EVA, EVA PREP) Ref. MSG 053	EMU PURGE (EVA, EVA PREP) Ref. MSG 053	EMU PURGE (EVA, EVA PREP) Ref. MSG 053	EMU PURGE (EVA, EVA PREP) Ref. MSG 053
EMU PREBREATHE (EVA, EVA PREP) Ref. MSG 049, Item 3	EMU PREBREATHE (EVA, EVA PREP) Ref. MSG 049, Item 3	EMU PREBREATHE (EVA, EVA PREP) Ref. MSG 049, Item 3	EMU PREBREATHE (EVA, EVA PREP) Ref. MSG 049, Item 3
DEPRESS (Cue Card, DEPRESS/REPRESS)	DEPRESS (Cue Card, DEPRESS/REPRESS)	DEPRESS (Cue Card, DEPRESS/REPRESS)	DEPRESS (Cue Card, DEPRESS/REPRESS)
POST DEPRESS (CC, DPRS/RPRS)	POST DEPRESS (CC, DPRS/RPRS)	POST DEPRESS (CC, DPRS/RPRS)	
EGRESS/DAILY SETUP	EXERCISE	EGRESS/DAILY SETUP	IVA EVA 4 SUPPORT
STIS REPAIR		STIS REPAIR	

Time scale: 11:00, 12:00, 13:00, 14:00; 16:00, 17:00, 18:00, 19:00, 20:00

Z: 87, 88, 89

STS ATI: -ZLV -XVV

STS-125 (FD07)

REPLANNED

GMT Date 05/17 (137) | W | TDRSE | Z | D/N | ORB | MET Day 005 | STS ATT | CDR ALTMAN | PLT JOHNSON | MS2 McARTHUR | HST CMD | NOTES

20:00 — 21:00 — 22:00 — 23:00 — 00:00

15:00 — 16:00 — 17:00 — 18:00

90 — 91 — 92

SUN PROTECT

STIS (PDRS, EVA 4)

P/TV06 HST EVA (OPS)
(P/TV, SCENES)
EVA 4 - Items 1,11,12

P/TV09 ICBC3D (FILMING OPS)
(P/TV, SCENES) Scene 14 Ref. MSG 052

P/TV06 HST EVA (OPS)
(P/TV, SCENES)
EVA 4 - Items 1,11,12

MNVR (INRTL) (SS Protect)
R=266 P=331 Y=18
A10/AUTO/VERN (5/20:39) Init MNVR

MNVR (TRK) BIAS +ZVV (SR Protect)
TG=2 BV=5 P=142 Y=12 OM=15
A10/AUTO/VERN (5/21:08) Init TRK

POWER DOWN STIS

MNVR (INRTL) (SS Protect)
R=266 P=331 Y=18
A10/AUTO/VERN (5/22:15) Init MNVR

MNVR (TRK) BIAS +ZVV (SR Protect)
TG=2 BV=5 P=142 Y=12 OM=15
A10/AUTO/VERN (5/22:44) Init TRK

STIS ALIVENESS TEST

MNVR (INRTL) (SS Protect)
R=266 P=331 Y=18
A10/AUTO/VERN (5/23:51) Init MNVR

STS-125 (FD07)

REPLANNED

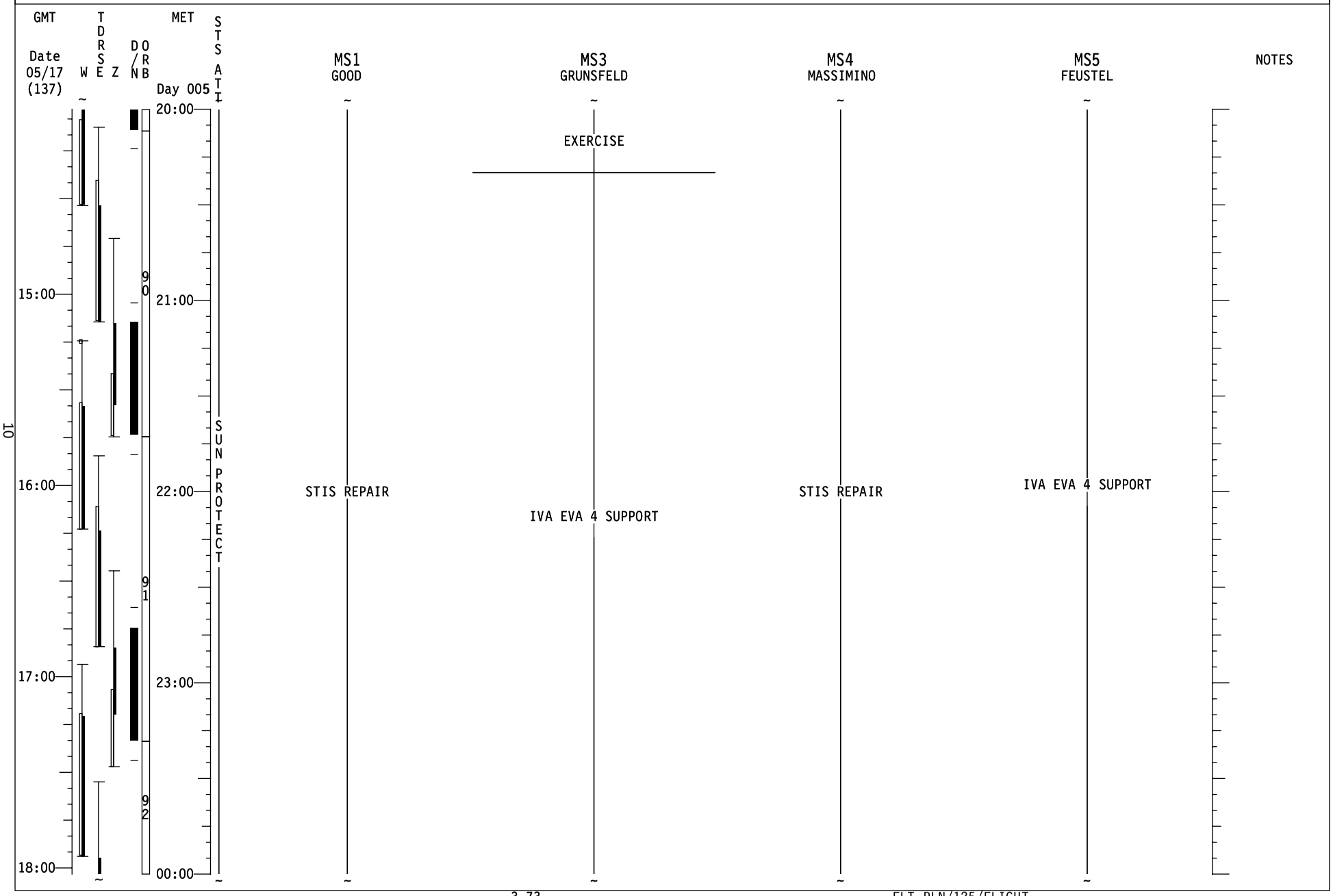

STS-125 (FD07)

REPLANNED

GMT Date 05/17 (137) | W | TDRSE | Z | D/N | ORB | MET Day 006 | STS ATT

CDR ALTMAN	PLT JOHNSON	MS2 McARTHUR	HST CMD	NOTES
STIS (PDRS, EVA 4)	P/TV06 HST EVA (OPS) (P/TV, SCENES) EVA 4 - Items 1,11,12			
NOBL 8 (PDRS, EVA 4)		MNVR (TRK) -ZLV -XVV TG=2 BV=3 OM=0 B11/AUTO/VERN (STIS cmplt) Init TRK		
EGRESS AT AIRLOCK (PDRS, EVA CLOSEOUT)	P/TV05 HST SURVEY (OPS) (P/TV, SCENES) +V2 Survey - Items 10 (all) & 11 When complete, load image card into PGSC and notify MCC.		STIS INSTRUMENT FUNCTIONAL TEST AND SAFE STIS	
RMS EXTENDED PARK (PDRS, EXTENDED PARK)	P/TV03 FSS OPS (SETUP & OPS) (P/TV, SCENES) Rotate - Item 2			
ROTATE HST (+V2 to +V3) (PL OPS, IN-BAY OPERATIONS)		ROTATE HST (+V2 to +V3) (PL OPS, IN-BAY OPERATIONS)		
	MNVR (TRK) -ZLV -YVV (Simo Dump) TG=2 BV=3 OM=270 A10/AUTO/VERN Init TRK	SUPPLY/WASTE WATER DUMP (ORB OPS, ECLS) Initiate Supply/Waste Dump Ref. MSG 049, Item 6	RESET PSEA CAPTURE AXIS TO +V3	UPLINK β21 + Mask Boxes 1,2 KU CH 2 -HST
	10.2 PSI MAINTENANCE (EVA, 10.2 PSI CABIN)		DUMP STIS F/T SCIENCE DATA	
EXERCISE	P/TV05 HST SURVEY (OPS) (P/TV, SCENES) +V3 Survey - Items 4-6 When complete, load image card into PGSC and notify MCC.		ACS ANNEAL HEATER TEST	UPLINK KU CH 2 -OCA
G2 SET CONTRACTION (ORB OPS, DPS) Configure Single G2, (1111)		SUPPLY/WASTE WATER DUMP (ORB OPS, ECLS) Terminate Waste Dump		
	HELMET LIGHT/PGT BATTERY RECHARGE (INIT) (EVA, EMU MAINT/RECHARGE) Ref. STS-125 EVA CONSUMABLES Cue Card and MSG 042			
IMU STAR OF OPPTY ALIGN (ORB OPS, GNC)	WCS COMPACTOR OPS (DUAL-VANE) (Cue Card)			
MNVR (TRK) -ZLV -XVV TG=2 BV=3 OM=0 B11/AUTO/VERN(Dump cmplt)Init TRK	ICBC3D STATUS REPORT HD DIGITAL VIA CC (ACTIVATION) (Cue Card, DIG PLYBK) Ref. MSG 054	SUPPLY/WASTE WATER DUMP (ORB OPS, ECLS) Terminate Supply Dump		

STS-125 (FD07)

REPLANNED

GMT Date 05/17 (137) | W E Z | T D R S | D/N O R B | MET Day 006 | STS ATT

MET	MS1 GOOD	MS3 GRUNSFELD	MS4 MASSIMINO	MS5 FEUSTEL	NOTES
00:00	STIS REPAIR		STIS REPAIR	IVA EVA 4 SUPPORT	
	NOBL 8	IVA EVA 4 SUPPORT	NOBL 8	EXERCISE	
01:00	DAILY CLOSEOUT/INGRESS		DAILY CLOSEOUT/INGRESS	IVA EVA 4 SUPPORT	
	PRE REPRESS (CC, DPRS/RPRS)	PRE REPRESS (CC, DPRS/RPRS)	PRE REPRESS (CC, DPRS/RPRS)		
	REPRESS (Cue Card, DEPRESS/REPRESS)	REPRESS (Cue Card, DEPRESS/REPRESS)	REPRESS (Cue Card, DEPRESS/REPRESS)	REPRESS (Cue Card, DEPRESS/REPRESS)	
02:00	POST EVA (EVA, POST EVA) Ref. MSG 049, Item 8	POST EVA (EVA, POST EVA) Ref. MSG 049, Item 8	POST EVA (EVA, POST EVA) Ref. MSG 049, Item 8	POST EVA (EVA, POST EVA) Ref. MSG 049, Item 8	
		MIDDECK EMU BATTERY RECHARGE (TERM) (EVA, EMU MAINT/RECHARGE)			
03:00	EMU BATTERY INSTALLATION & LiOH CHANGEOUT (EVA, EMU MAINT/RECHARGE) C	EMU BATTERY INSTALLATION & LiOH CHANGEOUT (EVA, EMU MAINT/RECHARGE) C	EVA 5 TOOL CONFIG (EVA, TIMELINES) Ref. STS-125 EVA CONSUMABLES Cue Card and MSG 042 and 049, Item 7	EVA 5 TOOL CONFIG (EVA, TIMELINES) Ref. STS-125 EVA CONSUMABLES Cue Card and MSG 042 and 049, Item 7	
	EMU SWAP (EVA, AIRLOCK CONFIG)	EMU SWAP (EVA, AIRLOCK CONFIG)			
			C Ref. STS-125 EVA CONSUMABLES Cue Card and MSG 042		
04:00	REBA BATTERY RECHARGE (INIT) C (EVA, EMU MAINT/RECHARGE)	REBA BATTERY RECHARGE (INIT) C (EVA, EMU MAINT/RECHARGE)			

STS ATT: MNVR, ZLV, XVV, ZLV, +YVV

Day 006 hours: 19:00, 20:00, 21:00, 22:00

DO/RB: 92, 93, 94

STS-125 (FD07)

REPLANNED

GMT Date 05/17 (137) | W E Z | DOR/NB | MET Day 006 | STS ATI

CDR ALTMAN | PLT JOHNSON | MS2 McARTHUR | HST CMD | NOTES

04:00 — 05:00 — 06:00 — 07:00 — 08:00

23:00 — 00:00 — 01:00 — 02:00

95 — 96 — 97

MNVR — -ZLV — -XVV

CDR (ALTMAN)

EVA 5 PROCEDURE REVIEW
Ref. EVA 5 BRIEF CARD
(EVA, TIMELINES)

PRE-SLEEP ACTIVITY
(ORB OPS, CREW SYS)

R5R DESELECT [D]
O6 √UHF MODE - OFF
L9 PAYLOAD STATION AUDIO A/G (two) - OFF
PRIVATE MEDICAL CONFERENCE

PRE-SLEEP ACTIVITY
(ORB OPS, CREW SYS)

10.2 PSI MAINTENANCE
(EVA, 10.2 PSI CABIN)

SLEEP

PLT (JOHNSON)

G1 BLACK REF IMAGE DOWNLINK
Ref. MSG 023
TDRW (04:05-05:05)

EVA 5 PROCEDURE REVIEW
Ref. EVA 5 BRIEF CARD
(EVA, TIMELINES)

PRE-SLEEP ACTIVITY
(ORB OPS, CREW SYS)

MIDDECK EMU BATTERY RECHARGE (Init)
(EVA, EMU MAINT/RECHARGE) [C]

PRE-SLEEP ACTIVITY
(ORB OPS, CREW SYS)

SLEEP

MS2 (McARTHUR)

SUPPLY/WASTE WATER DUMP
(ORB OPS, ECLS)
Terminate Supply Dump

EVA 5 PROCEDURE REVIEW
Ref. EVA 5 BRIEF CARD
(EVA, TIMELINES)

PRE-SLEEP ACTIVITY
(ORB OPS, CREW SYS)

PDIP 1 KU BAND RATE - OFF

PRE-SLEEP ACTIVITY
(ORB OPS, CREW SYS)

SLEEP

HST CMD

[C] Ref. STS-125 EVA CONSUMABLES
Cue Card and MSG 042

[D] GNC 23 RCS

CRT RCS R - ITEM 3 EXEC (*)
JET DES R5R - ITEM 37 EXEC (*)

NOTE
Expect DAP RECONFIG message.
DAP will mode to FREE.

C3 DAP: AUTO

SSR ENGINEERING PLAYBACK

NOTES

UPLINK
KU CH 3 -DTV

UPLINK
KU CH 2 -RNS
PDI FDA -INH

UPLINK
KU CH 2 -HST

STS-125 (FD07)

REPLANNED

GMT Date 05/17 (137) | W E Z | D/N | O R B | MET Day 006 | STS ATT

MS1 GOOD | MS3 GRUNSFELD | MS4 MASSIMINO | MS5 FEUSTEL | NOTES

04:00

REBA BATTERY RECHARGE (INIT) [C]
(EVA, EMU MAINT/RECHARGE)
PRE-SLEEP ACTIVITY
(ORB OPS, CREW SYS)
EVA 5 PROCEDURE REVIEW
Ref. EVA 5 BRIEF CARD
(EVA, TIMELINES)

REBA BATTERY RECHARGE (INIT) [C]
(EVA, EMU MAINT/RECHARGE)
D2Xs EVA CAMR
(P/TV, REF PROC)
D2Xs EVA-CAMR ONLY DISASSEMBLY
Perform Between EVAs
EVA 5 PROCEDURE REVIEW
Ref. EVA 5 BRIEF CARD
(EVA, TIMELINES)

PRE-SLEEP ACTIVITY
(ORB OPS, CREW SYS)
EVA 5 PROCEDURE REVIEW
Ref. EVA 5 BRIEF CARD
(EVA, TIMELINES)

[C] Ref. STS-125 EVA CONSUMABLES
Cue Card and MSG 042

EVA 5 PROCEDURE REVIEW
Ref. EVA 5 BRIEF CARD
(EVA, TIMELINES)

23:00 | 95

05:00

PRE-SLEEP ACTIVITY
(ORB OPS, CREW SYS)

PRE-SLEEP ACTIVITY
(ORB OPS, CREW SYS)

PRE-SLEEP ACTIVITY
(ORB OPS, CREW SYS)

PRE-SLEEP ACTIVITY
(ORB OPS, CREW SYS)

00:00 | 96

06:00

RECONFIGURE OCA D/L RATE [E]
PRE-SLEEP ACTIVITY
(ORB OPS, CREW SYS)

[E] After Crew Choice D/L complete:
L10 √MUX/VTR/CC PWR - ON (LED ON)
RECONFIGURE OCA D/L RATE (PL Max)
(ORB OPS, PGSC) Part C, omit Step 4
L10 MUX/VTR/CC PWR - OFF (LED OFF)

01:00 | 97

07:00

SLEEP | SLEEP | SLEEP | SLEEP

02:00

08:00

MNVR

-ZLV-XVV

Good Morning Atlantis!!!

Yesterday's EVA was awesome! Who would have thought that it would have gone so smoothly!

We want to thank the entire crew for all your hard work!

Have a great day!!!

HST Program Words:
Congratulations on another outstanding job! As CNN says: "Tricky Repair of Camera Goes Well for Astronauts".

We ran the ACS functional test tonight with great results. The first part of the functional test dealt with the new hardware, and this part passed with flying colors. The new CEB-R controlling the WFC channel is working with significantly less noise than before. The second part tested the entire ACS instrument and it hit a snag when we tried to backpower the HRC channel. So early test results say we have an operational ACS with a functioning WFC detector.

COS successfully completed its functional test. All electronic and mechanical systems along with the detector are operating beautifully. We believe this instrument is now running better than the PI, who is on his fourth glass of champagne.

Great job and thanks!

YOUR CURRENT ORBIT IS: 305 X 303 NM

NOTAMS:

EDW	LAKEBED RUNWAY 15/33 ELS ONLY. OTHER LAKEBED RWYS RED.
NOR	LAKEBED RUNWAYS GREEN.
MRN	TACAN AOG 23X OUT OF SERVICE.
GUA	RUNWAY 06R/24L CLOSED.
GDV	RUNWAY 03R/21L CLOSED.
KIN	UNUSABLE.
GSA	UNUSABLE.
AMB	UNUSABLE.
VBG	RUNWAY 30 THRESHOLD LIGHTS OUT OF SERVICE
NKT	CLOSED 15 MAY 1500Z UNTIL 18 MAY 1400Z
EIP	NOT USABLE. NO AGREEMENT.
BEN	NOT RECOMMENDED/NOT SUPPORTED.
BYD	POLITICALLY NOT RECOMMENDED. RUNWAY 32 THREHOLD DISP. 700M
AAT	POLITICALLY NOT RECOMMENDED.
LRB	POLITICALLY NOT RECOMMENDED. TACAN CH 85 OUT.

NEXT 2 PLS OPPORTUNITIES:

NOR17 ORB 091 – 05/22:45 SCT050 SCT250 7 180/05P08
EDW04 ORB 106 – 06/22:40 SKC 7 230/04P16

OMS TANK FAIL CAPABILITY:

LOMS FAILS: NO
ROMS FAILS: NO

LEAKING OMS PRPLT BURN:

L OMS LEAK: ALWAYS BURN RETROGRADE
R OMS LEAK: ALWAYS BURN RETROGRADE

OMS QUANTITIES(%) :

L OMS OX = 51.2 R OMS OX = 51.1
FU = 51.2 FU = 51.2

DELTA V AVAILABLE:

OMS	512 FPS
ARCS (TOTAL ABOVE QTY1)	20 FPS
TOTAL IN THE AFT	532 FPS
ARCS (TOTAL ABOVE QTY2)	49 FPS
FRCS (ABOVE QTY 1)	19 FPS
AFT QTY 1	78%
AFT QTY 2	40%

SYSTEM	FAILURE	IMPACT	WORK AROUND
PAYLOAD -IMAX	Moisture was present on the ICBC3D window in front of the lens.	Potential loss of scenes due to fogged window.	Minimize time that door is open and camera is ARMED so that heaters keep the camera and window warm. Use Camera B to see if fog is present prior to shot.
PAYLOAD -SSE	No BAPS Rotator motion occured during first attempt at rotation from –V2 to –V3.	After 6 seconds, crew took PL RETEN LAT switch to OFF, then back to REL; the rotator functioned nominally and the rotation to -V3 was completed.	None. Crew will continue to use nominal procedures for future BAPS rotations.

END OF PAGE 2 OF 2, MSG 050

ICBC Fog

Many thanks to Drew for making the catch on the window fog, and for all the feedback we've gotten so far. We are researching the fogging down here, so any further insights you have from there will be greatly appreciated.

For future ICBC filming, please follow these guidelines to try to mitigate the fog:

- Keep the ICBC3D door closed as much as practical. We know you have to look through the camera to be ready for a shot, but keeping the door closed helps to keep in the heat. As the heat escapes even faster during the night, please keep the door closed during night passes.

- When the camera is ARMED, the heaters shut down. We suggest you only arm the camera just before a camera run and DISARM right after the shot is complete. The camera will lose the most heat when ARMED with the window open.

- Do not open the door until there is sufficient light in the cargo bay for a good exposure. It appears that the first 10 minutes of a day pass are too dark for shooting (we noticed you didn’t shoot the –V2 door opening this morning, presumably for this reason).

We can’t afford to shoot the remaining seconds of film through fog. Checking for fog using Camera B (on a non-interference basis) before a scene will prevent this. (We saw a close up view of the open ICBC window on camera B tonight and happily it was free of condensation at the time.)

If you have any further information or questions for us, please call us.

ICBC SCENES

Thank you for the COSTAR and ACS scenes yesterday.

<u>EVA 4 SCENES:</u>

<u>Scene 5:</u> +V2 Door Opening. 30mm 28 seconds. Today is the last opportunity for critical +V2 door opening scene. Per the timeline it will occur in darkness, but if the timeline changes, this scene is the highest priority.

<u>Scene 14</u>: STIS Ops. 40mm 25 seconds. Desire RMS EV on the RMS while moving with multiple tools on the MWS and the top of the MFR handle, all floating in motion. The more RMS and tool motion, the better.

Note that with so little film remaining, we can't risk a specific STIS opportunity being lost to darkness. We'd like you to capture a more general STIS scene that shows the complexity of the tools and hardware on the workstation as the EV crew moves.

If you have any questions at all about either scene today, please call us for direction.

END OF PAGE 1 OF 1, MSG 052

Mike, thanks for answering the sizing questions yesterday. Sometimes when heel-to-shoulder or crotch-to-shoulder fit is bad, problems manifest in the area you experienced. Based on your answers, we agree that removing BSIs and Toe Caps from your boots is the primary corrective action. Unfortunately the thermal slipper cannot be installed on the prime LCVG. Although you could use your prime LCVG without thermal slippers, we recommend using the backup LCVG with thermal slippers based on your EVA 2 experience. Perform the following steps to configure backup LCVG.

LCVG (G1)
1) Remove signal conditioner, sternal harness, and dosimeter
2) Cut tack stitches and remove heel pad assembly (2), temp stow until EVA Prep
3) Stow prime LCVG

LCVG (B/U)
4) Install signal conditioner, sternal harness, and dosimeter
5) In EVA PREP step 20 complete following deltas to install heel pads
    a) Don LCVG
    b) Un-snap the LCVG boot around ankle
    c) Install heel pad assembly (2)
    d) Snap LCVG boot
6) Continue EVA Prep step 21

If foot pain is noticed in EMU PURGE step 2, the following steps may be performed to shorten the legs and reduce pressure on top of foot.

DCM
7) O2 ACT --> OFF
8) PURGE vlv --> op (up)
9) Check STATUS: SUIT P < 0.4 (compare with gauge)
10) Disconnect and reconnect one glove from EMU
11) Adjust lower leg cams to **short**, 2 per leg (4 total)
    (EMU Resize, EVA EMU CONTINGENCY PROCS)
12) Start in step 75 EVA Prep (EVA, EVA Prep)

Additional Note:
Per Rex Walheim: "After chasing boot pain issues for over seven years, there are as many boot pain issues from EMU Leg sizing as there are from the BSI. If the EMU is sized correctly, once pressurized, you should be able to pull your foot back in the boot away from the pressure point on the top of the foot." It will feel a little different in the boots without the BSI. Your feet will feel sloppy but you'll get used to it. You will notice that ingressing a PFR requires more twisting of your ankles to get under the heel clip.

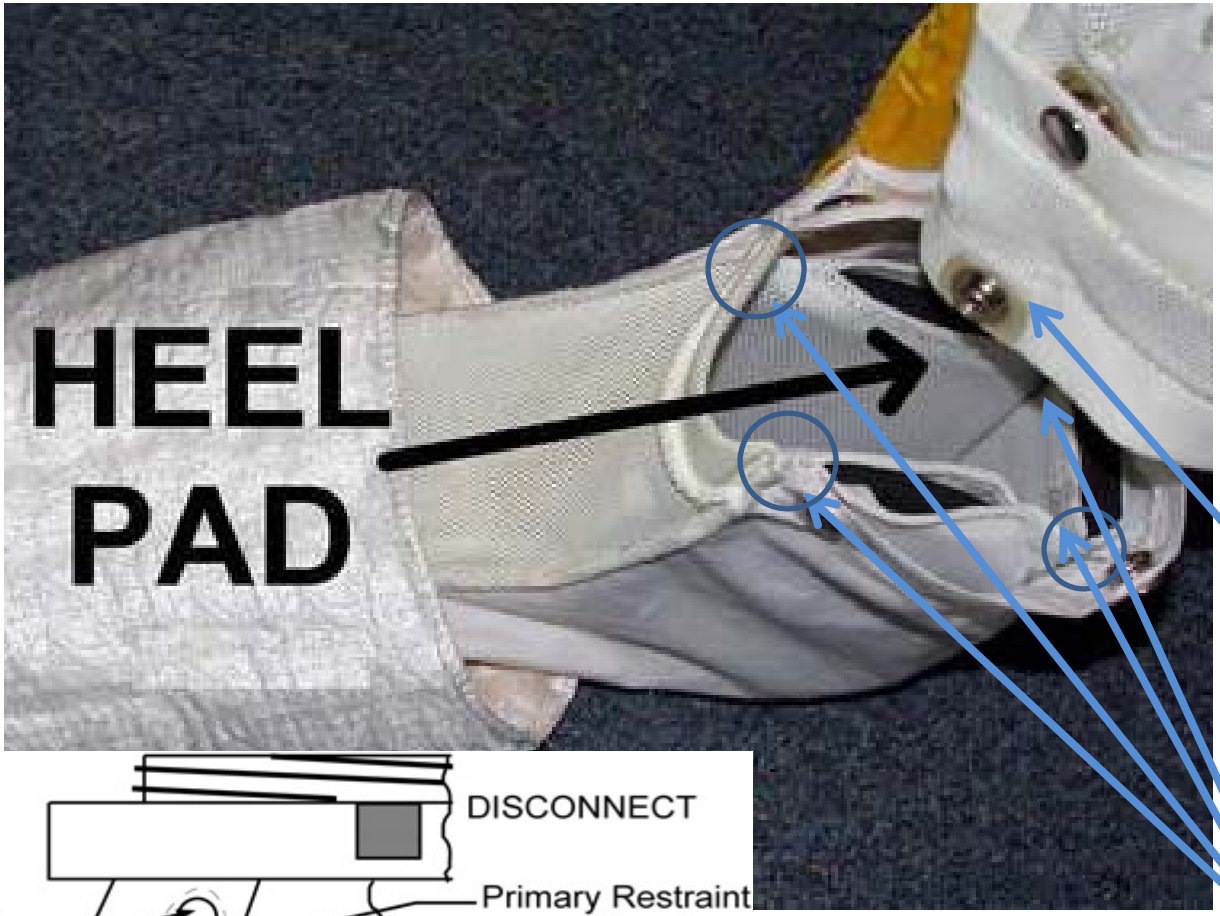

Snaps

Stitch Tacks
(2 per side)

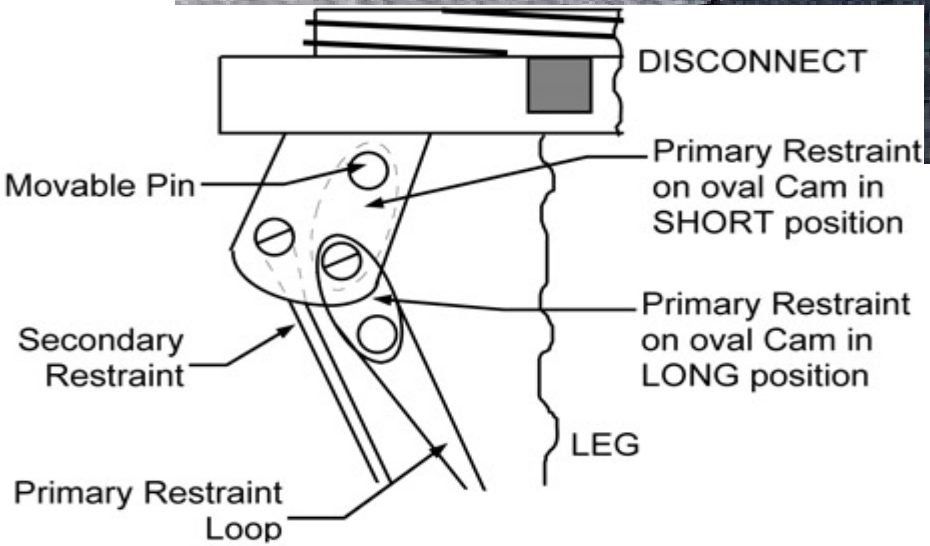

Crew Choice TV Downlink KU Available Opportunities for FD7

TDRS	Start	End	Duration
TDE	6/02:55	03:13	18 min
TDZ	6/03:33	04:04	31 min
	(No HD downlink capability, Alpha gimbal transition at about 03:48)		
TDW	6/04:05	05:05	60 min
	(Alpha gimbal transition at about 04:19)		
TDE	6/05:30	05:38	8 min
TDW	6/05:52	05:57	5 min
	6/06:13	06:47	34 min
TDE	6/07:14	07:22	8 min