National Aeronautics and Space Administration

PRESS KIT/FEBRUARY 2009

STS-119
Full Power

www.nasa.gov

United Space Alliance

CONTENTS

Section	Page
STS-119 MISSION OVERVIEW	1
STS-119 TIMELINE OVERVIEW	11
MISSION PROFILE	15
MAJOR MISSION PRIORITIES	17
MISSION PERSONNEL	19
STS-119 CREW	21
PAYLOAD OVERVIEW	31
DISCOVERY TO TRANSPORT LAST U.S. STARBOARD TRUSS SEGMENT TO SPACE STATION	31
RENDEZVOUS AND DOCKING	43
UNDOCKING, SEPARATION AND DEPARTURE	44
SPACEWALKS	47
EXPERIMENTS	55
DETAILED TEST OBJECTIVES	55
CONSTELLATION PROGRAM DETAILED TEST OBJECTIVES	56
SPACE SHUTTLE SOLID ROCKET MOTOR PRESSURE OSCILLATION DATA GATHERING	57
SHUTTLE REFERENCE DATA	59
LAUNCH AND LANDING	77
LAUNCH	77
ABORT-TO-ORBIT	77
TRANSATLANTIC ABORT LANDING	77
RETURN-TO-LAUNCH-SITE	77
ABORT ONCE AROUND	77
LANDING	77

Section	Page
ACRONYMS AND ABBREVIATIONS	79
MEDIA ASSISTANCE	91
PUBLIC AFFAIRS CONTACTS	93

STS-119 MISSION OVERVIEW

The STS-119 crew members

As the 28th mission to the International Space Station, STS-119 will continue the strides made to complete construction of the orbiting complex. Discovery and its crew will deliver to the station not only the final set of power-generating solar array wings, but also the newest crew member.

Discovery is scheduled to launch at 7:32 a.m. EST Feb. 12, and arrive at the space station two days later. Once docked, the shuttle and station crews will begin 10 days of joint activities including four spacewalks.

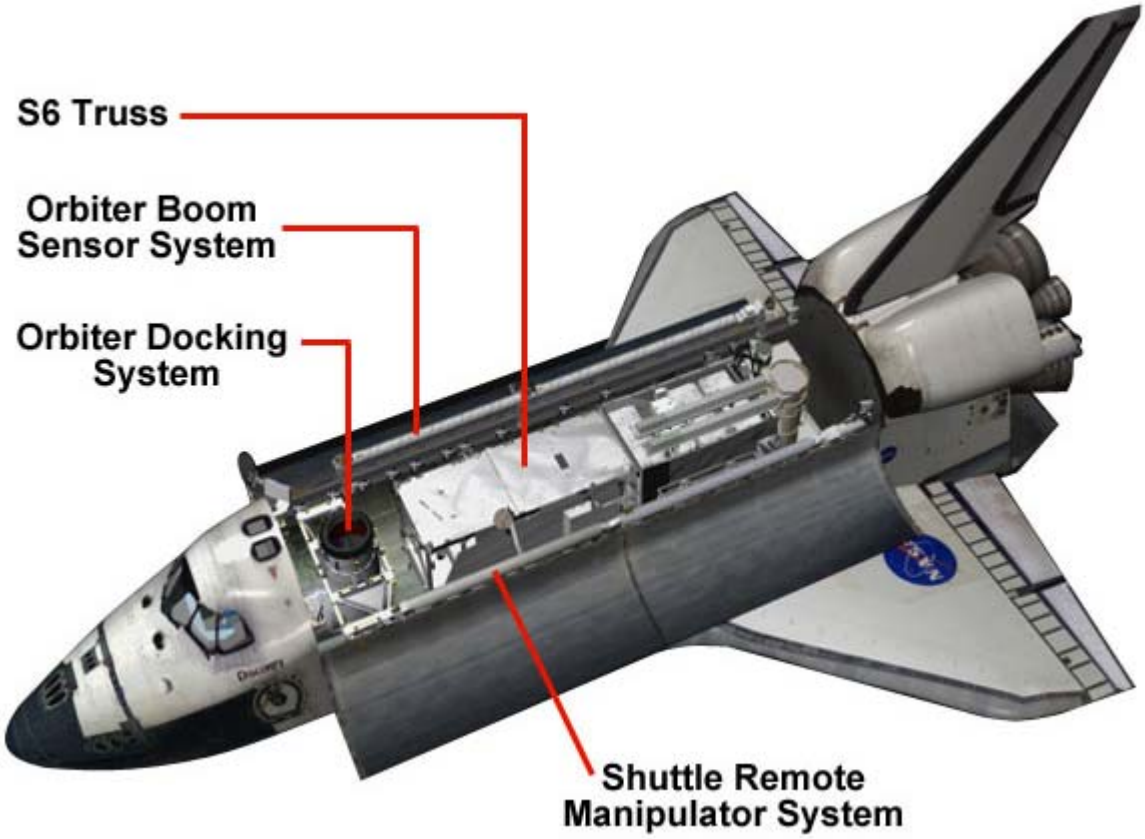

This graphic depicts the location of the STS-119 payload hardware.

Air Force Col. Lee Archambault (ARSH-um-boh) will lead the STS-119 crew. Navy Cmdr. Tony Antonelli will serve as the pilot. The mission specialists for the flight are Joseph Acaba, John Phillips, Steve Swanson, Richard Arnold and Japan Aerospace Exploration Agency astronaut Koichi Wakata.

Wakata will remain on the station, joining Expedition 18 Commander E. Michael Fincke, an Air Force colonel, and Flight Engineer Yury Lonchakov (LAHN'-chuh-coff), a Russian Air Force colonel. Wakata will replace Expedition 18 Flight Engineer Sandra Magnus, who will return to Earth with the STS-119 crew. Wakata will serve as a flight engineer for Expeditions 18 and 19.

Fincke and Lonchakov were launched to the complex in the Soyuz TMA-13 spacecraft on Oct. 12, 2008, from the Baikonur Cosmodrome in Kazakhstan. Wakata will return to Earth on shuttle mission STS-127, while Fincke and Lonchakov will return in the Soyuz in April.

The STS-119 flight will deliver the final pair of power-generating solar array wings and truss element to the space station. The delivery and installation of the station's final, major U.S. truss segment, Starboard 6 (S6), during the STS-119 mission will signal the station's readiness to house a six-member crew for conducting increased science. With the installation of the 31,127-pound, 45.4-foot-long segment, the station's completed truss, or backbone, will measure 335 feet – more than the length of a football field.

Astronauts Lee Archambault (left) and Tony Antonelli, STS-119 commander and pilot, respectively, pose for a photo in the cockpit of a NASA DC-9 aircraft before a Heavy Aircraft Training (HAT) session at Ellington Field near NASA's Johnson Space Center.

Discovery also will carry a replacement Distillation Assembly for the station's new water recycling system. The unit is part of the Urine Processing Assembly that removes impurities from urine in an early stage of the recycling process. The entire Water Recovery System was delivered and installed during the STS-126 mission in November. Astronauts were able coax it into use during that mission by performing in-flight maintenance, but the Distillation Assembly failed after Endeavour's departure. The replacement unit will fly in Discovery's middeck and be installed by Sandy Magnus while other crew members are working on the mission's second spacewalk.

Flight Day 2

The day after launch, inspection of Discovery's thermal protection heat shield will be performed per the standard shuttle procedures. Phillips, Antonelli and Acaba will use the shuttle's robotic arm with a 50-foot extension boom to obtain detailed imagery of the reinforced carbon-carbon protection on the leading edge of the orbiter's wings and other critical surfaces. The Orbiter Boom Sensor System, or OBSS, uses laser devices and cameras to map the shuttle's heat shield. After Discovery is docked to the station, any focused inspection of the shuttle's thermal protection

system would require a handoff of the sensor boom from the station's robotic arm to the shuttle's robotic arm because of interference created by the docking system linking the shuttle to the station.

The crew also will check out spacesuits to be used during the mission's four spacewalks and prepare for the next day's rendezvous and docking with the station by checking out rendezvous tools, installing the centerline camera and extending the orbiter's docking system ring.

Flight Day 3

On the third day of the mission, after Discovery has closed within 600 feet of the station, Archambault will operate the shuttle's aft flight deck controls to approach the station for docking. First, Archambault will execute a slow backflip maneuver, presenting the belly of Discovery and other areas of its heat protective tiles to station residents Fincke and Magnus, who will use digital cameras equipped with 400 and 800 millimeter lenses to acquire high resolution photos of Discovery's heat shield.

About two hours after Discovery attaches to the forward docking port at the end of the station's Harmony module, hatches will be opened between the two spacecraft to allow the 10 crew members to greet one another for the start of joint operations.

Following a standard safety briefing by Fincke, the crews will get to work, activating a Station-to-Shuttle Power Transfer System that will provide additional electricity to Discovery for the longer operation of shuttle systems.

A few hours after hatch opening, Magnus and Wakata will exchange custom-made Russian Soyuz spacecraft seat liners. With that exchange, Wakata will become a member of the Expedition 18 space station crew and Magnus will become part of Discovery's crew.

Flight Day 4

The following day, joint activities begin in earnest. Magnus will join Phillips at the robotics workstation in the station's Destiny laboratory to use the station's robotic arm, Canadarm2, to grapple the S6 truss segment in the shuttle's payload bay. They'll use the multi-jointed arm to gently lift the S6 truss from the cargo bay and hand it to the shuttle robotic arm, controlled by Antonelli and Acaba at Discovery's aft flight deck. While the shuttle arm holds the truss segment, the station arm will be repositioned to the installation worksite. Once in position, the shuttle arm will hand the truss back over to the station robotic arm where it will remain in an overnight parked position. The rest of the day will focus on preparation for the first spacewalk of the mission.

All 10 crew members will join to review procedures for the first planned spacewalk before Swanson and Arnold make their way to the Quest airlock where they will spend the night. This "campout" procedure helps to purge nitrogen from the astronauts' bloodstream to prevent decompression sickness during the spacewalk.

Flight Day 5

On the fifth day of the flight, Swanson and Arnold will begin the first spacewalk by working with the crew inside to install the awaiting truss segment. Phillips, at the space station's robotic workstation, will work in tandem with the two spacewalkers to maneuver the truss segment into place where the spacewalkers can then work on the detailed installation tasks. The spacewalkers will

provide visual cues to Phillips for the final alignment before bolting the segment, connecting umbilicals, removing thermal covers, and releasing and unstowing the solar array blanket boxes, which store the accordion-like arrays. They'll also prepare the truss' photovoltaic radiator for deployment.

Astronaut Joseph Acaba (right foreground), STS-119 mission specialist, dons a training version of his shuttle launch and entry suit in preparation for a training session in the Space Vehicle Mockup Facility at NASA's Johnson Space Center. United Space Alliance suit technician Toni Cost-Davis assists Acaba.

Japan Aerospace Exploration Agency astronaut Koichi Wakata, Expedition 18 flight engineer, takes a moment for a photo during a training session in the Space Vehicle Mockup Facility at NASA's Johnson Space Center. Wakata is wearing a training version of his shuttle launch and entry suit.

Flight Day 6

The following day sets aside time for a focused inspection of Discovery's thermal protection system, if needed. If required, Archambault, Acaba and Antonelli will use the OBSS to conduct the inspection. The crews also will continue with the exchange of supplies and equipment from the shuttle to the station.

Flight Day 7

On flight day seven, Swanson will be joined by Acaba for the second spacewalk of the mission, the first ever for Acaba. They will prepare batteries on the Port 6 truss segment for replacement on a later mission and deploy an unpressurized cargo carrier attachment system on the P3 – or Port 3 truss segment. While still on the port side of the truss, Swanson will repair a thermal cover on a radiator beam valve module while Acaba installs fluid jumpers between the P1 and P3 truss segments. Next, they will move to the starboard side of the station's truss to deploy a payload attachment system on the S3 segment. Before heading back to the station's airlock, they'll relocate a tool stanchion from the Z1 truss segment to the exterior of the Destiny laboratory and pick up a foot restraint for stowage inside the airlock.

Astronauts Richard Arnold (left) and John Phillips (center), both STS-119 mission specialists, participate in a Full Fuselage Trainer (FFT) mockup training session in the Space Vehicle Mockup Facility at NASA's Johnson Space Center. United Space Alliance crew instructor Lynn Coldiron assists the crew members.

While the spacewalk is under way, Magnus will spend about three hours installing a replacement Distillation Assembly in Water Recovery System rack No. 2 in the Destiny Laboratory. The unit is part of the Urine Processing Assembly that removes impurities from urine in an early stage of the water recycling process. The failed Distillation Assembly will be returned to Earth for analysis by NASA engineers who are working to identify the cause of the failure.

Flight Day 8

The station should look even brighter after flight day eight, when the solar array's wings are deployed. The crew will preside first over the deployment of the 1B electrical channel array toward the end of the station where Discovery is docked. When nearly half of the array's length is unfurled, the crew will take a short break and proceed with the remainder of the 1B deployment. Next, they'll move to the 3B electrical channel array deployment toward the Russian segment of the complex, initially only deploying to the near-halfway point, and then to the full extension. This phased approach will give the onboard crew and the ground engineers time to monitor the deployment and ensure the arrays are unfolding properly. If focused inspection of the heat shield is not required on flight day six,

then the solar array deployment will be moved up 48 hours earlier into the inspection's reserved time.

Flight Day 9

On flight day nine, Acaba and Arnold will venture out for the third spacewalk, the second for each of them. On this spacewalk, the two will relocate a Crew and Equipment Translation Aid (CETA) cart to be used with the future battery replacement activity. Arnold will next reconfigure a cover on the Special Purpose Dexterous Manipulator's orbital replacement unit tool changeout mechanism and remove a cover from one of its electronics units. When that task is complete, Arnold will lubricate one of the two end effectors of the space station robotic arm, duplicating the work done by spacewalker Shane Kimbrough during the STS-126 mission on the opposite end. Meanwhile, Acaba will work between the S1 and S3 truss segments to attach cables in a bolt bus controller panel on the segment-to-segment attach system and install a fluid jumper. Afterward, the spacewalkers will reunite near the center of the station to replace Remote Power Control Modules on the Port 1 and Starboard 0 truss segments.

Astronaut Richard Arnold, STS-119 mission specialist, participates in an Extravehicular Mobility Unit (EMU) spacesuit fit check in the Space Station Airlock Test Article (SSATA) in the Crew Systems Laboratory at NASA's Johnson Space Center. Astronauts Lee Archambault (left foreground), commander; Tony Antonelli (right background), pilot; and Steve Swanson (right foreground), mission specialist, assisted Arnold.

Flight Day 10

The crew members will continue the transfer of supplies and equipment between the space station and Discovery. They also will participate in a joint news conference. They will review procedures for the fourth and final planned spacewalk of the mission. Swanson and Arnold will spend the night in the Quest airlock in preparation for that spacewalk.

Flight Day 11

Swanson and Arnold will conduct the fourth planned spacewalk. They will work separately for the first half of the mission's final spacewalk. Swanson will begin by installing a GPS antenna on the exterior of the Japanese logistics module. After that, he'll swap connectors on a patch panel on the station's zenith truss segment. Meanwhile, Arnold will photograph the radiators on the first port and starboard truss segments, using both regular and infrared cameras. In September, ground controllers noticed damage to one panel of the starboard radiator, and the photos will help them determine how the damage is affecting its operation.

After that, Swanson and Arnold will work together. First they'll install a wireless video system external transceiver assembly, or WETA, which supports the transmission of video from spacewalkers' helmet cameras, on the S3 truss segment. To do so, Swanson will remove a dummy box currently in the location, and then attach the WETA to a stanchion. Arnold will connect three cables to the assembly.

Afterward, Swanson and Arnold will prepare two more payload attachment systems on the S3 truss segment – one on the outboard side of the bottom of the segment, and one on the inboard side of the top of the segment. They will use the same process employed during the mission's second spacewalk.

Flight Day 12

The shuttle crew will complete the transfer of their spacewalk equipment back from the station's Quest airlock to Discovery on flight day 12, before saying farewell to the station crew and preparing for hatch closure between the two spacecraft.

Flight Day 13

Discovery is scheduled to undock from the station on flight day 13. Antonelli, flying the shuttle from the aft flight deck, will conduct a flyaround of the complex so the crew can capture detailed imagery of the station's new configuration with the last of its power-producing solar arrays unfurled. After a little more than a lap around the station, Antonelli will fire the shuttle's jets to separate from the station. At that time, Antonelli, Acaba and Phillips will take turns with the shuttle's robotic arm and the OBSS to conduct a "late" inspection of the shuttle's heat shield, a final opportunity to confirm Discovery's readiness to return to Earth.

Flight Day 14

On flight day 14, Archambault, Antonelli and Swanson will conduct the traditional checkout of the orbiter's flight control surfaces and steering jets in preparation for landing the next day. The shuttle crew also will stow equipment and supplies used during the mission, berth the sensor boom on the payload bay's starboard sill and shut down the shuttle's robotic arm systems for the remainder of the mission. The entire crew will conduct a review of landing procedures.

The crew also will stow any remaining equipment and set up a special "recumbent" seat in the middeck to assist Magnus as she readapts to Earth's gravity following three months of weightlessness.

Discovery is scheduled to return to Earth with a landing at NASA's Kennedy Space Center, Fla., in the pre-dawn hours, bringing to an end its 36th mission, the 28th shuttle flight to the International Space Station and the 125th flight in shuttle program history.

Attired in training versions of their shuttle launch and entry suits, the STS-119 crew members await the start of a training session in the Space Vehicle Mockup Facility at Johnson Space Center. From the left are Japan Aerospace Exploration Agency astronaut Koichi Wakata, Expedition 18 flight engineer; NASA astronauts Tony Antonelli, STS-119 pilot; Lee Archambault, commander; John Phillips, Joseph Acaba, Richard Arnold and Steve Swanson, all mission specialists.

STS-119 TIMELINE OVERVIEW

Flight Day 1

- Launch
- Payload Bay Door Opening
- Ku-Band Antenna Deployment
- Shuttle Robotic Arm Activation
- Umbilical Well and Handheld External Tank Photo and TV Downlink

Flight Day 2

- Discovery Thermal Protection System Survey with Shuttle Robotic Arm/Orbiter Boom Sensor System (OBSS)
- Extravehicular Mobility Unit Checkout
- Centerline Camera Installation
- Orbiter Docking System Ring Extension
- Orbital Maneuvering System Pod Survey
- Rendezvous Tools Checkout

Flight Day 3

- Rendezvous with the International Space Station
- Rendezvous Pitch Maneuver Photography by the Expedition 18 Crew
- Docking to Harmony/Pressurized Mating Adapter-2
- Hatch Opening and Welcoming
- Wakata and Magnus Exchange Soyuz Seatliners; Wakata Joins Expedition 18, Magnus Joins the STS-119 Crew
- U.S. Spacesuit Transfer from Discovery to Space Station

Flight Day 4

- Canadarm2 Grapple and Unberth of S6 Truss from Discovery's Payload Bay
- Canadarm2 Handoff of S6 Truss to Shuttle Robotic Arm
- Canadarm2 Translation to S6 Installation Worksite
- Shuttle Robotic Arm Handoff of S6 Truss Back to Canadarm2
- Spacewalk 1 Procedure Review
- Spacewalk 1 Campout by Swanson and Arnold

Flight Day 5

- Spacewalk Preparations
- Spacewalk by Swanson and Arnold (S6 Installation and Umbilical Connections, Solar Array Blanket Box Release and Unstow)
- S6 Truss Photovoltaic Radiator Deploy

Flight Day 6

- Canadarm2 Grapple of OBSS and Handoff to Shuttle Robotic Arm
- Shuttle Robotic Arm/OBSS Focused Inspection of Discovery's Thermal Protection System, if Required
- Shuttle/Station Transfers
- Spacewalk 2 Procedure Review
- Spacewalk 2 Campout by Swanson and Acaba

Flight Day 7

- Spacewalk Preparations
- Spacewalk 2 by Swanson and Acaba (P6 Battery Replacement Preparations for STS-127 Spacewalks, Deployment of P3 and S3 Truss Payload Attachment Systems, P1/P3 Fluid Jumper Connections and Radiator Beam Valve Module Thermal Cover Removal and P6 Power and Data Grapple Fixture Retrieval)
- Shuttle/Station Transfers
- Water Recovery System Distillation Assembly Replacement

Flight Day 8

- S6 1B and 3B Channel Solar Array Deployments (If no focused inspection is required, the solar array deployment activity will move to Flight Day 6.)
- Shuttle/Station Transfers
- Spacewalk 3 Procedure Review
- Spacewalk Campout by Acaba and Arnold

Flight Day 9

- Spacewalk Preparations
- Spacewalk 3 by Acaba and Arnold (CETA Cart Relocation, Dextre Cover Removal Tasks, Canadarm2 Latching End Effector B Lubrication, P1 and S0 Truss Remote Power Control Module Replacement)
- Shuttle/Station Transfers

Flight Day 10

- Crew Off Duty Period
- Shuttle/ISS Transfers
- Joint Crew News Conference
- Spacewalk 4 Procedure Review
- Spacewalk 4 Campout by Swanson and Arnold

Flight Day 11

- Spacewalk Preparations
- Spacewalk 4 by Swanson and Arnold (Payload Attachment System Deployments, Video Signal Converter Installation, Fiber Optic Cable Installation)
- Shuttle/Station Transfers

Flight Day 12

- Final Post-Spacewalk Hardware Transfers
- Crew Off Duty Periods
- Final Farewells and Hatch Closure
- Centerline Camera Installation

Flight Day 13

- Undocking
- Flyaround of the International Space Station
- Final Separation
- OBSS Late Inspection of Discovery's Thermal Protection System

Flight Day 14

- Flight Control System Checkout
- Reaction Control System Hot-Fire Test
- Cabin Stowage
- Magnus' Recumbent Seat Setup
- Crew Deorbit Briefing
- Ku-Band Antenna Stowage

Flight Day 15

- Deorbit Preparations
- Payload Bay Door Closing
- Deorbit Burn
- Kennedy Space Center Landing

This page intentionally blank

MISSION PROFILE

CREW

Commander:	Lee Archambault
Pilot:	Tony Antonelli
Mission Specialist 1:	Joseph Acaba
Mission Specialist 2:	Steve Swanson
Mission Specialist 3:	Richard Arnold
Mission Specialist 4:	John Phillips
Mission Specialist 5:	Koichi Wakata (Up)
Mission Specialist 5:	Sandra Magnus (Down)

LAUNCH

Orbiter:	Discovery (OV-103)
Launch Site:	Kennedy Space Center Launch Pad 39A
Launch Date:	Feb. 12, 2009
Launch Time:	7:32 a.m. EST (Preferred In-Plane Launch Time)
Launch Window:	5 Minutes
Altitude:	122 Nautical Miles (140 Miles) Orbital Insertion; 195 NM (224 Miles) Rendezvous
Inclination:	51.6 Degrees
Duration:	13 Days 18 Hours 16 Minutes

VEHICLE DATA

Shuttle Liftoff Weight:	4,521,669 pounds
Orbiter/Payload Liftoff Weight:	266,448 pounds
Orbiter/Payload Landing Weight:	200,986 pounds
Software Version:	OI-33

Space Shuttle Main Engines:

SSME 1:	2048
SSME 2:	2051
SSME 3:	2058
External Tank:	ET-127
SRB Set:	BI-135
RSRM Set:	103

SHUTTLE ABORTS

Abort Landing Sites

RTLS:	Kennedy Space Center Shuttle Landing Facility
TAL:	Primary – Zaragoza, Spain; Alternates – Moron, Spain and Istres, France
AOA:	Primary – Kennedy Space Center Shuttle Landing Facility; Alternate – White Sands Space Harbor

LANDING

Landing Date:	Feb. 26, 2009
Landing Time:	1:48 a.m. EST
Primary landing Site:	Kennedy Space Center Shuttle Landing Facility

PAYLOADS

Starboard 6 Truss Segment

This page intentionally blank

MAJOR MISSION PRIORITIES

1. Dock Discovery to Pressurized Mating Adapter (PMA)-2 port and perform mandatory safety briefing for all crew members
2. Rotate Expedition 18 Flight Engineer Sandra Magnus with Expedition 18/19 Flight Engineer Koichi Wakata
3. Configure International Space Station for Starboard 6 (S6) truss installation
4. Perform robotic operations in support of S6 unberthing and installation
5. Perform S6 installation and deployment tasks
6. Transfer mandatory quantities of water from Discovery to the space station
7. Transfer and stow critical cargo items to the space station
8. Deploy S6 photovoltaic radiator
9. Configure station, S3/S4, and deploy S6 solar array wings
10. Configure space station for post-S6 installation
11. Verify S6 1B and 3B solar array wing positioning capability to support docking and undocking operations for visiting vehicles
12. Perform minimum of crew handover of 12 hours per rotating crew member including crew safety handover
13. Remove and replace Urine Processor Assembly-Distillation Assembly
14. Relocate Crew and Equipment Translation Aid (CETA) cart
15. Prepare P6 battery for Flight 2J/A
16. Prepare and install Japan Aerospace Exploration Agency Proximity Global Positioning System antenna B on Japanese Experiment Logistics Module-Pressurized Section
17. Perform a minimum of one Water Processor Assembly urine processing cycle
18. Deploy S3 upper outboard Payload Attachment System (PAS)
19. Deploy P3 nadir Unpressurized Cargo Carrier Attachment System (UCCAS) site
20. Perform remaining high-priority maintenance activities of the Russian Operations Segment systems after Progress 32P arrival
21. Perform daily space station payload status checks as required
22. Perform station payload research operations tasks, sortie experiments and short-duration bioastronautics investigations
23. Transfer required nitrogen from Discovery to the space station airlock high-pressure gas tank
24. Perform additional crew handover of four hours per rotating crew member

25. Perform the following EVA tasks:
    - Release S6 Integrated Equipment Assembly (IEA) micrometeoroid orbital debris cover
    - Remove and replace S0-1A-D Remote Power Control Module (RPCM)
    - Remove and replace P1-1A-A RPCM
    - Lubricate Canadarm2 latching end-effector B snares
    - Reconfigure Z1 patch panel
    - Perform imagery survey of port and starboard radiators using IR camera and digital still camera
    - Deploy S3 lower outboard PAS
    - Deploy S3 upper inboard PA
    - Disconnect S1/S3 Segment-to-Segment Attach System (SSAS) umbilicals and install caps
    - Roll up blanket on the Special Purpose Dexterous Manipulator (SPDM) to cover aluminum ground tabs
    - Remove SPDM Electronics Platform 1 thermal cover
    - Retrieve and relocate tool stanchion on CETA cart
    - Retrieve and relocate Articulating Portable Foot Restraint (APFR) No. 4
    - Tack down flaps on SPDM
    - Install Wireless Video System External Transceiver Assembly No. 3 at S3 location

MISSION PERSONNEL

KEY CONSOLE POSITIONS FOR STS-119

	Flt. Director	CAPCOM	PAO
Ascent	Richard Jones	George Zamka TBD (Weather)	Kylie Clem
Orbit 1 (Lead)	Paul Dye	George Zamka	Nicole Cloutier-Lemasters
Orbit 2	Mike Sarafin	Greg (Box) Johnson	Brandi Dean
Planning	Norm Knight/ Bryan Lunney	Shannon Lucid	Josh Byerly
Entry	Richard Jones	George Zamka TBD (Weather)	Kylie Clem
Shuttle Team 4	Tony Ceccacci	N/A	N/A
ISS Orbit 1 (Lead)	Kwatsi Alibaruho	Rick Davis	N/A
ISS Orbit 2	Heather Rarick	Lucia McCullough	N/A
ISS Orbit 3	David Korth	Jay Marschke	N/A
Station Team 4	Bob Dempsey		

HQ PAO Representative at KSC for Launch – Michael Curie

JSC PAO Representative at KSC for Launch – TBD

KSC Launch Commentator – Candrea Thomas

KSC Launch Director – Mike Leinbach

NASA Launch Test Director – Steve Payne

This page intentionally blank

STS-119 CREW

The shape of the STS-119/15A patch is of a solar array viewed at an angle.

The International Space Station, which is the destination of the mission, is placed accordingly in the center of the patch just below the gold astronaut symbol. The gold solar array of the space station highlights the main cargo and task of STS-119/15A – the installation of the S6 truss segment and deployment of its solar arrays, the last to be delivered to the station. Under the Japanese Kibo module, marked by a red circle, is the name of Japanese astronaut Koichi Wakata, who goes up to the station to serve as flight engineer representing the Japan Aerospace Exploration Agency (JAXA). The rest of the STS-119/15A crew members are denoted on the outer band of the patch. The 17 white stars represent, in the crew's words, "The enormous sacrifice the crews of Apollo 1, Challenger, and Columbia have given to our space program." The U.S. flag flowing into the space shuttle signifies the support the people of the United States have given our space program over the years, along with pride the U.S. astronauts have in representing the United States on this mission.

Attired in training versions of their shuttle launch and entry suits, these seven astronauts take a break from training to pose for the STS-119 crew portrait. From the right (front row) are NASA astronauts Lee Archambault, commander, and Tony Antonelli, pilot. From the left (back row) are NASA astronauts Joseph Acaba, John Phillips, Steve Swanson, Richard Arnold and Japan Aerospace Exploration Agency astronaut Koichi Wakata, all mission specialists. Wakata is scheduled to join the Expedition 18 crew as a flight engineer after launching to the station on STS-119.

Short biographical sketches of the crew follow with detailed background available at: http://www.jsc.nasa.gov/Bios/

STS-119 CREW BIOGRAPHIES

Lee Archambault

Air Force Col. Lee Archambault will lead the crew of STS-119 on the 28th shuttle mission to the space station. Archambault served as the pilot of STS-117 in 2007 and has logged more than 14 days in space. He has overall responsibility for the execution of the mission, orbiter systems operations and flight operations, including landing. In addition, Archambault will fly the shuttle in a procedure called the rendezvous pitch maneuver while Discovery is 600 feet below the station to enable the station crew to photograph the shuttle's heat shield. He will then dock Discovery to the station.

Tony Antonelli

Navy Cmdr. Tony Antonelli will serve as the pilot for the mission. Selected in 2000, this will be his first spaceflight. During the mission, Antonelli will be responsible for orbiter systems operations, shuttle robotic arm operations and will help Archambault in the rendezvous and docking with the station. Antonelli will undock Discovery from the station at the end of the joint mission.

Joseph Acaba

Selected as an astronaut candidate in 2004, this will be Joseph Acaba's first spaceflight. After completing his initial training, Acaba was assigned to the Hardware Integration Team in the Space Station Branch working technical issues with the European Space Agency. During the mission, Acaba will perform two spacewalks, helping with the installation and outfitting of the space station.

Acaba has five years of teaching experience, one at Melbourne High School in Florida and four years as a math and science teacher at Dunnellon Middle School in Florida.

Steve Swanson

This will be the second trip to space for Steve Swanson, who flew as a mission specialist on STS-117. Swanson conducted two spacewalks on that mission, acquiring more than 13 hours of extravehicular activity time. He will use that experience during this mission as the lead spacewalker. Swanson will perform the first, second and fourth spacewalks to install new components to the station.

Richard Arnold

A classmate of Acaba's, Richard Arnold also was selected in 2004 and is making his first spaceflight. He also worked in the Hardware Integration Team, working technical issues with the Japan Aerospace Exploration Agency. Arnold also participated in a NASA Extreme Environment Mission Operations (NEEMO) where he lived and worked in an undersea laboratory for 10 days. He will conduct three spacewalks on this mission.

Arnold's education experience includes an assignment as a science teacher at John Hanson Middle School in Waldorf, Md. In 1993, he taught college preparatory biology and marine environmental science at the Casablanca American School in Casablanca, Morocco. In 1996, he was employed as a middle and high school science teacher and Science Department chair at the American International School in Riyadh, Saudi Arabia. In 2001, he taught middle school mathematics and science at the International School of Kuala Kencana in West Papua, Indonesia. In 2003, he accepted a similar teaching position at the American International School of Bucharest in Bucharest, Romania.

John Phillips

John Phillips will be returning to space with more prior spaceflight experience than the rest of his crewmates combined. Phillips flew on shuttle mission STS-100, acquiring more than 12 days of spaceflight experience. He went on to serve as a flight engineer on Expedition 11, a long-duration mission where he performed a spacewalk and spent nearly 180 days in space. On the STS-119 mission, he will perform robotic arm operations and co-lead the transfer activities with Arnold.

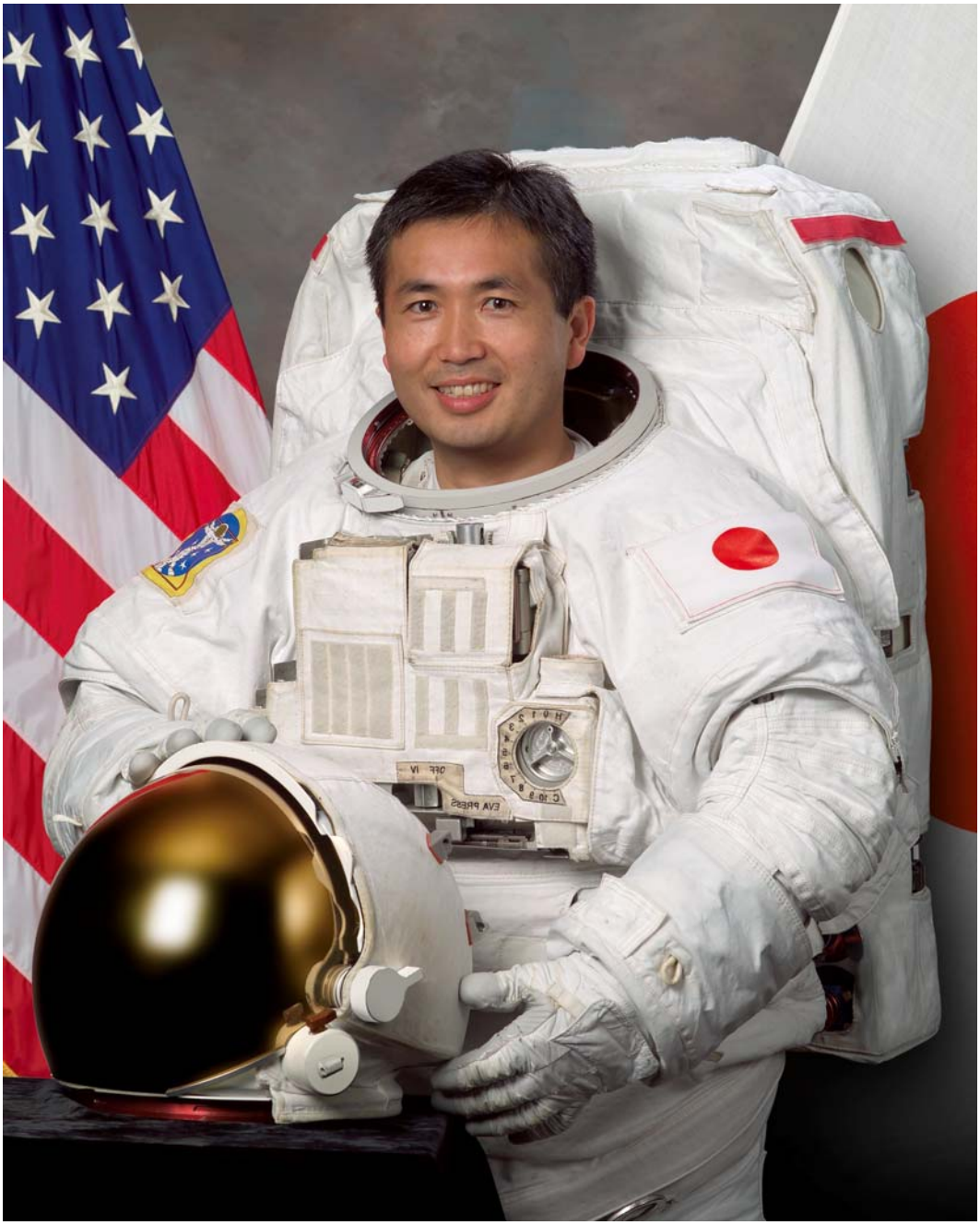

Koichi Wakata

Koichi Wakata will be making his third trip to space. He was the first Japanese mission specialist when he flew as part of STS-72. His second flight was STS-92, a mission to the space station that will now be his new home. Once he arrives on the station this time, he'll be joining the onboard crew and become a flight engineer on Expedition 18. He will remain onboard and return with STS-127.

Sandra Magnus

Astronaut Sandra Magnus will be concluding her long-duration mission aboard the space station and returning to Earth as a mission specialist on STS-119. She arrived at the complex with the STS-126 crew in November and has since served as a flight engineer on Expedition 18. This long-duration mission was her second flight to space. She had previously flown as a mission specialist aboard STS-112.

PAYLOAD OVERVIEW

In the Space Station Processing Facility at NASA's Kennedy Space Center, Boeing workers stand ready as the starboard integrated truss, known as S6, is rotated in order to remove and replace lower deck batteries.

DISCOVERY TO TRANSPORT LAST U.S. STARBOARD TRUSS SEGMENT TO SPACE STATION

STS-119 will deliver the International Space Station's final, major U.S. truss segment, Starboard 6 (S6), providing the power-generating capacity for a six-person crew to conduct increased science activities. With its two Solar Array Wings (SAWs) for converting solar energy into electrical power and a radiator for rejecting heat away from electrical components, the S6 is the final truss element and completes the station's 11-segment Integrated Truss Structure (ITS). Also called a Photovoltaic Module (PVM) because of its ability to generate, store and distribute electrical power to the station, the Starboard 6 segment will ensure the outpost is powered to its intended maximum potential.

A unique feature about the S6 is that it will carry two spare Battery Charge/Discharge Units (BCDUs), used for controlling the charge and discharge of spare batteries on the station. The

S6 segment was modified to carry the additional BCDUs, attached to the segment's Long Spacer Truss structure.

The space station's solar arrays are the largest deployable space assemblies ever built and the most powerful electricity-producing arrays in orbit. Until deployed, each SAW remains folded in a special canister called a Solar Array Assembly (SAA) at the end of the S6 element. In the canister, each wing is equipped with an expandable mast. Two solar array blanket boxes, containing 32,800 solar cells, are connected to the ends of each canister and are restrained to the element frame for launch. The addition of S6 brings the station's total SAWs to eight. Each wing is 115 by 38 feet wide and, when all eight are fully deployed, will encompass an area of 32,528 square feet, minus the masts.

S6 Specifications	
Dimensions:	Width: 16.3 feet; 195.48 inches Length: 45.4 feet; 545.16 inches Height: 14.7 feet; 176.54 inches
On-Orbit Weight:	31,060 lbs
Cost	$297,918,471

The 310-foot integrated truss structure to which the S6 will be attached forms the backbone of the space station, with mountings for unpressurized logistics carriers, radiators, solar arrays, and the various elements. The 45-foot-long S6 began as an operations test item for its twin sister, the Port 6 truss segment that was launched during Endeavour's STS-97 mission on Nov. 30, 2000. The starboard element was delivered to Kennedy Space Center in Florida on Dec. 17, 2002.

Boeing, NASA's prime contractor for the station, designed the S6 and worked with major subcontractors Lockheed Martin, Honeywell, Space Systems/Loral, and Hamilton Sundstrand to build it. Pratt and Whitney Rocketdyne provided most of the electrical power system components.

Integrated Truss Segments and Payload Structure

The integrated truss segments started with Starboard 0 (S0) as the center assignment and were numbered in ascending order outward to the port (P) and starboard (S) sides. Starboard is the right side and port is the left side of the truss structure. Zenith (Z) is up, when the station is flying in its normal orientation. At one time, there was an S2 and a P2 planned, but they were eliminated when the station design was scaled back. From S0, the truss segments are P1, P3, P4, P5 and P6 and S1, S3, S4, S5 and S6. P6 is attached to P5, and once in orbit S6 will be attached to S5. The S6 primary structure is made of a hexagonal-shaped aluminum structure and includes four bulkheads and six longerons, which are beams that connect the bulkheads.

During the STS-119 mission, S6 will be removed from the payload bay with the space station's robotic arm because the shuttle's arm is unable to remove the element with the current configuration of the station. The S6 element then will be handed to the shuttle arm and maneuvered to another location, while the station arm changes base points. The S6 then will be handed back to the station arm and maneuvered to an overnight park position. Removing the truss from the payload bay and

maneuvering to an overnight park position takes an entire day. The following day the truss will be installed during a planned spacewalk. Once the final truss segment is attached, S6 will support power generation and energy storage, utility routing, power distribution and Orbital Replacement Unit (ORU) storage.

Major Subsystems

Major subsystems of the S6 truss are the starboard outboard Photovoltaic Module (PVM), the Photovoltaic Radiator (PVR), the Long Spacer Truss (LST) and the Modified Rocketdyne Truss Attachment System (MRTAS). The S6 PVM includes all equipment outboard S5, namely the two Photovoltaic Array Assemblies (PVAAs) and the Integrated Equipment Assembly (IEA). The PVR provides thermal cooling for the IEA. The MRTAS is used to provide a structural interface to the S5 truss element. Each PVAA consists of a SAW and Beta Gimbal Assembly (BGA).

Major Elements

Photovoltaic Modules (PVMs)

S6 will be the fourth and final of the four PVMs that convert sunlight to electricity in orbit. The primary functions of the power module are to collect, convert, store, and distribute electrical power to loads within the segment and to other station segments. Electrical power is a critical resource for the station because it allows astronauts to live comfortably, safely operate the station and perform complex scientific experiments. Since the only readily available source of energy for spacecraft is sunlight, technologies were developed to efficiently convert solar energy to electrical power.

Photovoltaic Module

The PVMs use large numbers of solar cells assembled onto solar arrays to produce high power levels. NASA and Lockheed Martin developed a method of mounting the solar arrays on a "blanket" that can be folded like an accordion for delivery to space and then deployed to its full size once in orbit. The cells are made from purified crystal ingots of silicon that directly convert light to electricity for immediate use through a process called photovoltaics.

Gimbals are used to rotate the arrays so that they face the sun to provide maximum power to the space station. After the conversion process, the PVMs also use the electricity to recharge onboard batteries for continuous sources of electricity while the station is in the Earth's shadow. Once complete, the station power system, consisting of U.S. and Russian hardware and four photovoltaic modules, will use between 80 – 100 kilowatts of power or about as much as 42 average houses (defined as 2,800 square feet of floor space using 2 kilowatts each). Some of the electricity is needed to operate space station systems, but once that is figured in, the addition of the S6 will nearly double the amount of power available to perform scientific experiments on the station – from 15 kilowatts to 30 kilowatts.

Solar Array Wings (SAWs)

There are two SAWs on the S6 module, each deployed in the opposite direction of the other. Each SAW is made up of two solar blankets mounted to a common mast. Before deployment, each panel is folded accordion style into a Solar Array Blanket Box (SABB) measuring 20 inches high and 15 feet in length. Each blanket is only about 20 inches thick while in this stored position. The mast consists of interlocking battens that are stowed for launch inside a Mast Canister Assembly (MCA).

When deployed by the astronauts, the SAW unfolds like an erector set. Like a human torso, it has two arms when mounted on S6, and they are rotated outwards by astronauts during a spacewalk so they can be fully deployed. Because these blankets were stored for such a long time, extensive testing was conducted to ensure they would unfold properly in orbit so the blankets would not stick together.

When fully deployed, the SAW extends 115 feet and spans 38 feet across and extends to each side of the Integrated Equipment Assembly. Since the second SAW is deployed in the opposite direction, the total wing span is more than 240 feet.

Each SAW weighs more than 2,400 pounds and uses 32,800 solar array cells, each measuring 8 centimeters square with 4,100 diodes. The individual cells were made by Boeing's Spectrolab and Aviation Systems Engineering Co. There are 400 solar array cells to a string and there are 82 strings per wing. Each SAW is capable of generating 32.8 kilowatts, or about 10.5 to 15 kilowatts of usable power. There are two SAWs on the S6 module capable of delivering a combined 21 to 30 kilowatts of usable power per PVM with a total of four PVMs on the station.

The solar arrays produce more power than can be made available to the station's systems and experiments. Because all or part of the solar arrays are eclipsed by the Earth or station structure at times, batteries are used to store electricity for use during those periods. About 60 percent of the electricity generated is used to recharge the batteries. During long eclipse periods, power availability is limited to about

10.5 kilowatts from each SAW, or 30 kilowatts per PVM. During shorter eclipse periods more power is available to station systems and experiments. Circuit breakers also regulate the flow of electricity to prevent overheating of the Utility Transfer Assembly (UTA) that allows power to flow through the rotating SARJ.

Space Station Power

	Current (3 PVMS)	Starboard 6 (S6)	Total (post STS-119)
Power Generation Capability	198 kilowatts	66 kilowatts	264 kilowatts
Usable Power Capability*	63-90 kilowatts	21-30 kilowatts	84-120 kilowatts
Power for Science**	15 kilowatts	15 kilowatts	30 kilowatts

* The amount of usable power varies depending on the time of year and the orientation of the station relative to the Earth and sun.
** A greater fraction of power from the first three photovoltaic modules (PVMs) currently installed is needed to support day-to-day station systems operation.

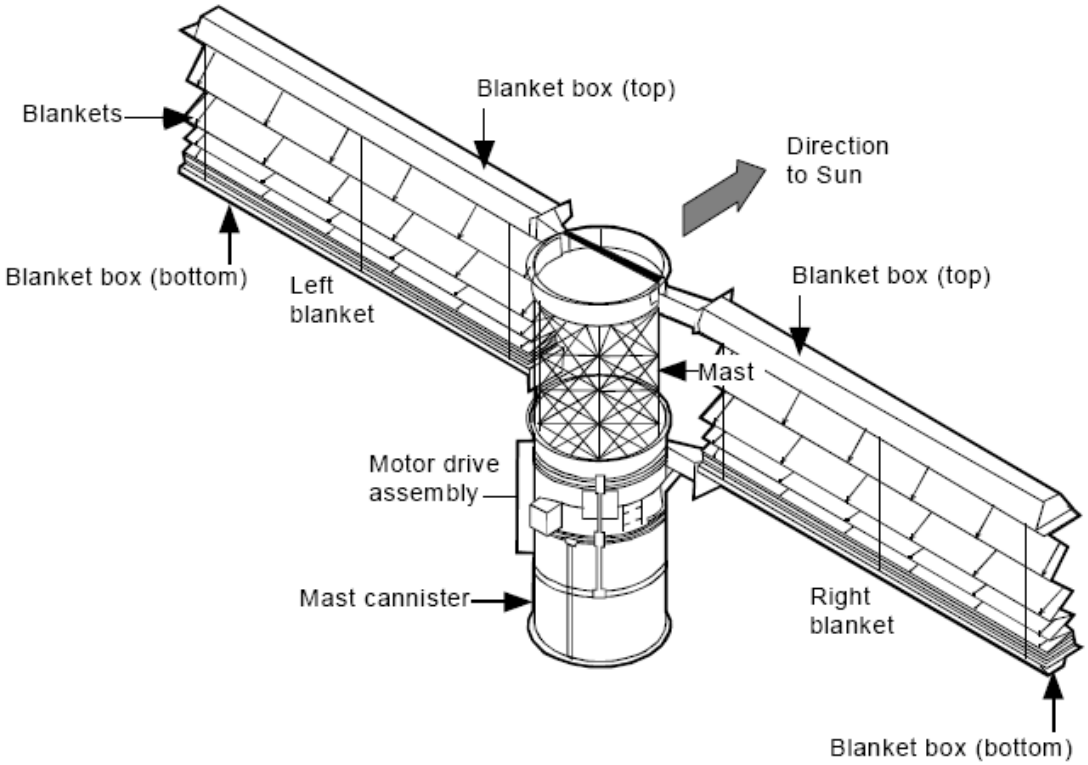

Solar Array Wings

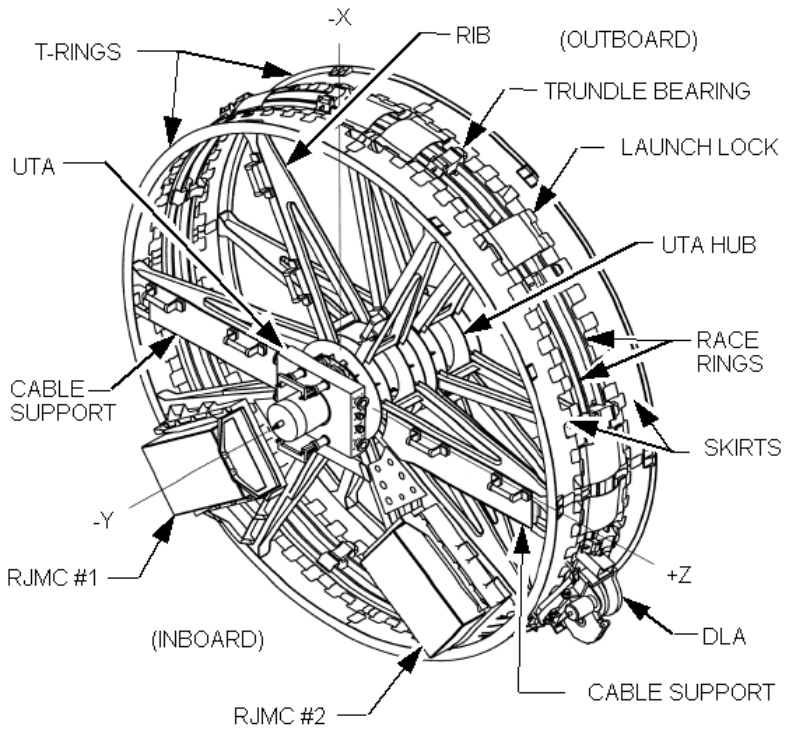

Solar Alpha Rotary Joint

Solar Alpha Rotary Joint (SARJ)

When the S6 truss is attached to the S5 short spacer, it will be positioned outboard of the starboard SARJ, which is designed to continuously rotate to keep the S4 and S6 solar array wings oriented toward the sun as the station orbits the Earth. Located between S3 and S4, the starboard SARJ is a 10.5-foot diameter rotary joint that weighs approximately 2,500 pounds. The SARJ can spin 360 degrees using bearing assemblies and a servo control system to turn. Due to vibrations and damage found on its race ring, the starboard SARJ has been rotated only when needed. STS-126 astronauts cleaned and lubricated the race ring, and preliminary results show the joint is moving more freely. The race ring has a triangular cross-section on which 12 bearings roll. All of the power flows through the Utility Transfer Assembly (UTA) in the SARJ. Roll ring assemblies allow transmission of data and power across the rotating interface so it never has to unwind.

Beta Gimbal Assembly (BGA)

The solar array wings also are oriented by the BGA, which can change the pitch of the wings by spinning the solar array. The BGA measures 3 x 3 x 3 feet and provides a structural link to the Integrated Equipment Assembly (IEA). The BGA's most visual functions are to deploy and retract the SAW and rotate it about its longitudinal axis. The BGA consists of three major components: the Bearing, Motor and Roll Ring Module (BMRRM), the Electronics Control Unit (ECU) and the Beta Gimbal Transition Structure, mounted on the BGA platform. The Sequential Shunt Unit (SSU) serves to manage and distribute the power generated from the arrays and is also mounted on each BGA platform.

Both the SARJ and BGA are pointing mechanisms and mechanical devices used to point the arrays toward the sun. They can follow an angle target and rotate to that target in the direction toward the sun. Controllers in orbit continuously update those targets so they keep moving as the station orbits the Earth every 90 minutes, maintaining the same orientation toward the sun at the same orbital rate. The SARJ mechanism rotates 360 degrees every orbit, or about 4 degrees per minute, whereas the BGA moves only about four or five degrees per day.

S6 Integrated Equipment Assembly (IEA)

The IEA has many components: 12 battery subassembly Orbital Replacement Units (ORUs), Battery Charge/Discharge Units (BCDU) ORUs, two Direct Current Switching Units (DCSUs), two Direct Current to Direct Current Converter Units (DDCUs), and two Photovoltaic Controller Units (PVCUs). The IEA integrates the Thermal Control Subsystem that consists of one Photovoltaic Radiator (PVR) ORU and two Pump Flow Control Subassembly (PFCS) ORUs, which are used to transfer and dissipate heat generated by the IEA ORU boxes.

In addition, the IEA provides accommodation for ammonia servicing of the outboard PV modules as well as pass through of power and data to and from the outboard truss elements. The IEA measures 16 x 16 x 16 feet, weighs nearly 17,000 pounds and is designed to condition and store the electrical power collected by the photovoltaic arrays for use aboard the station. The IEA integrates the energy storage subsystem, the electrical distribution equipment, the thermal control system and structural framework. The IEA consists of three major elements:

1. The power system electronics consisting of the Direct Current Switching Unit (DCSU) used for primary power distribution; the Direct Current to Direct Current Converter Unit (DDCU) used to produce regulated secondary power; the Battery Charge/Discharge Unit (BCDU) used to control the charging and discharging of the storage batteries; and the batteries used to store power.

2. The Photovoltaic Thermal Control System (PVTCS) consisting of: the coldplate subassemblies used to transfer heat from electronic boxes to the coolant; the Pump Flow Control Subassembly (PFCS) used to pump and control the flow of ammonia coolant; and the Photovoltaic Radiator (PVR) used to dissipate the heat into deep space. Ammonia, unlike other chemical coolants, has significantly greater heat transfer properties.

3. The computers used to control the S6 module ORUs consisting of two Photovoltaic Controller Unit (PVCU) Multiplexer/Demultiplexers (MDMs).

The IEA power system is divided into two independent and nearly identical channels. Each channel is capable of control, storage and distribution of power to the station. The two SAWs are attached to the outboard end of the IEA.

Direct Current Switching Unit (DCSU)

Power received from each SAW is fed directly into the appropriate DCSU, a high-power, multi-path remotely controlled unit used for primary and secondary power distribution, protection and fault isolation within the IEA. During periods of sunlight, the DCSU routes primary power directly to the station from its SAW and also routes power to the power storage system for battery charging. During periods of eclipse, the DCSU routes power from

the power storage system to the station. The DCSU measures 25" by 40" by 14" and weighs 218 pounds.

Direct Current to Direct Current Converter Unit (DDCU)

Primary power from the DCSU also is distributed to the DDCU, a power processing system that conditions the coarsely regulated power from the SAW and BCDUs to 124.5 +/- 1.5 direct current volts. It has a maximum power output of 6.25 kW. This power is used for all S6 operations employing secondary power. By transmitting power at higher voltages and stepping it down to lower voltages where the power is to be used, much like municipal power systems, the station can use smaller wires to transmit this electrical power and thus reduce launch loads. The converters also isolate the secondary system from the primary system and maintain uniform power quality throughout the station. The DDCU measures 27.25" by 23" by 12" and weighs 129 pounds.

Primary power from the DCSU also is distributed to the three power storage systems within each channel of the IEA. The power storage system consists of a Battery Charge/Discharge Unit (BCDU) and two battery subassembly ORUs. The BCDU serves a dual function of charging the batteries during solar collection periods and providing conditioned battery power to the primary power busses via the DCSU during eclipse periods. The BCDU has a battery charging capability of 8.4 kW and a discharge capability of 6.6 kW. The BCDU also includes provisions for battery status monitoring and protection from power circuit faults. Commanding of the BCDU is done from the PVCU. The BCDU measures 28" by 40" by 12" and weighs 235 pounds.

Each battery subassembly ORU consists of 38 lightweight nickel hydrogen cells and associated electrical and mechanical equipment. Two battery subassembly ORUs connected in series are capable of storing 8 kilowatt-hours (kWh) of electrical power. This power is fed to the station via the BCDU and DCSU, respectively. The batteries have a design life of 6.5 years and can exceed 38,000 charge/discharge cycles at 35 percent depth of discharge. Each battery measures 41" by 37" by 19" and weighs 372 pounds.

Photovoltaic Thermal Control System (PVTCS)

To maintain the IEA electronics and batteries at safe operating temperatures in the harsh space environment, a PVTCS is used. The PVTCS consists of ammonia coolant, 11 coldplates, two Pump Flow Control Subassemblies (PFCS) and one Photovoltaic Radiator (PVR).

The coldplate subassemblies are an integral part of the IEA structural framework. Heat is transferred from the IEA Orbital Replacement Unit (ORU) electronic boxes to the coldplates via fine interweaving fins on both the coldplate and the electronic boxes. The fins add lateral structural stiffness to the coldplates in addition to increasing the available heat transfer area.

Pump Flow Control Subassemblies (PFCS)

The PFCS is the heart of the thermal system, consisting of all the pumping capacity, valves and controls required to pump the heat transfer fluid to the heat exchangers and radiator, and regulate the temperature of the thermal control system ammonia coolant. The PVTCS is designed to dissipate an average of 6,000 watts

of heat, and communicates with the PVCUs. Each PFCS consumes 275 watts during normal operations and measures approximately 40 by 29 by 19 inches, weighing 235 pounds.

Photovoltaic Radiator (PVR)

The PVR is deployable in orbit and is comprised of two separate flow paths through seven panels. Each flow path is independent and is connected to one of the two PFCSs on the IEA. In total, the PVR can reject up to 14 kW of heat into deep space. The PVR weighs 1,633 pounds and, when deployed, measures 44 by 12 by 7 feet.

Eleven-Segment Integrated Truss Structure

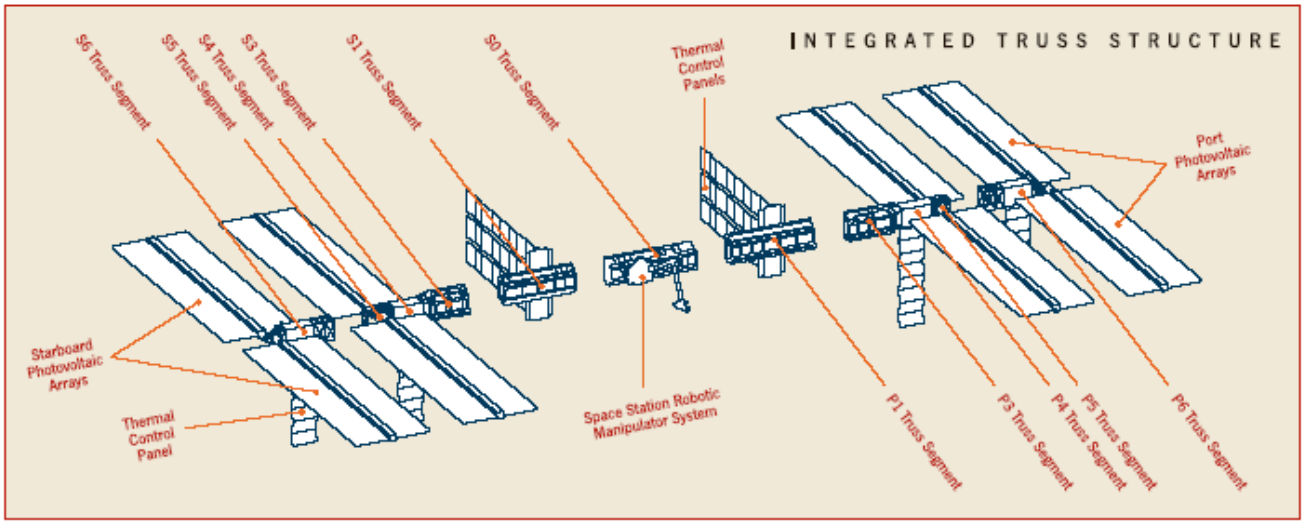

Element Name: Starboard 6 Segment

Manufacturer: The Boeing Company

Dimensions: 16.3 feet wide; 45.4 feet long; 14.7 feet high

On-orbit Weight: 31,060 lbs

Cost: $297,918,471

Structure: Primarily aluminum

Major components: The S6 Photovoltaic module includes all equipment outboard Truss Segment S5, namely the two Photovoltaic Array assemblies and the Integrated Equipment Assembly (IEA).

Purpose: The S6 segment provides the space station with its final two power generation and storage channels, for a total of eight channels, along with providing storage of spare electrical power boxes.

Construction: S6 was designed and built by Boeing Rocketdyne Power and Propulsion, now Pratt and Whitney, in Canoga Park, Calif. The assembled S6 was delivered to the Space Station Processing Facility at Kennedy Space Center on Dec. 17, 2002, and handed off to NASA in September 2003.

Major Subcontractors: Lockheed Martin, Honeywell, Hamilton Sundstrand, Space Systems/Loral, Pratt and Whitney Rocketdyne

Unberthing and Installation: Starboard 6 shuttle robotic arm unberth during STS-119 and station robotic arm handoff operations shown below.

Starboard 6 shuttle robotic arm unberth during STS-119 and station robotic arm handoff operations shown below

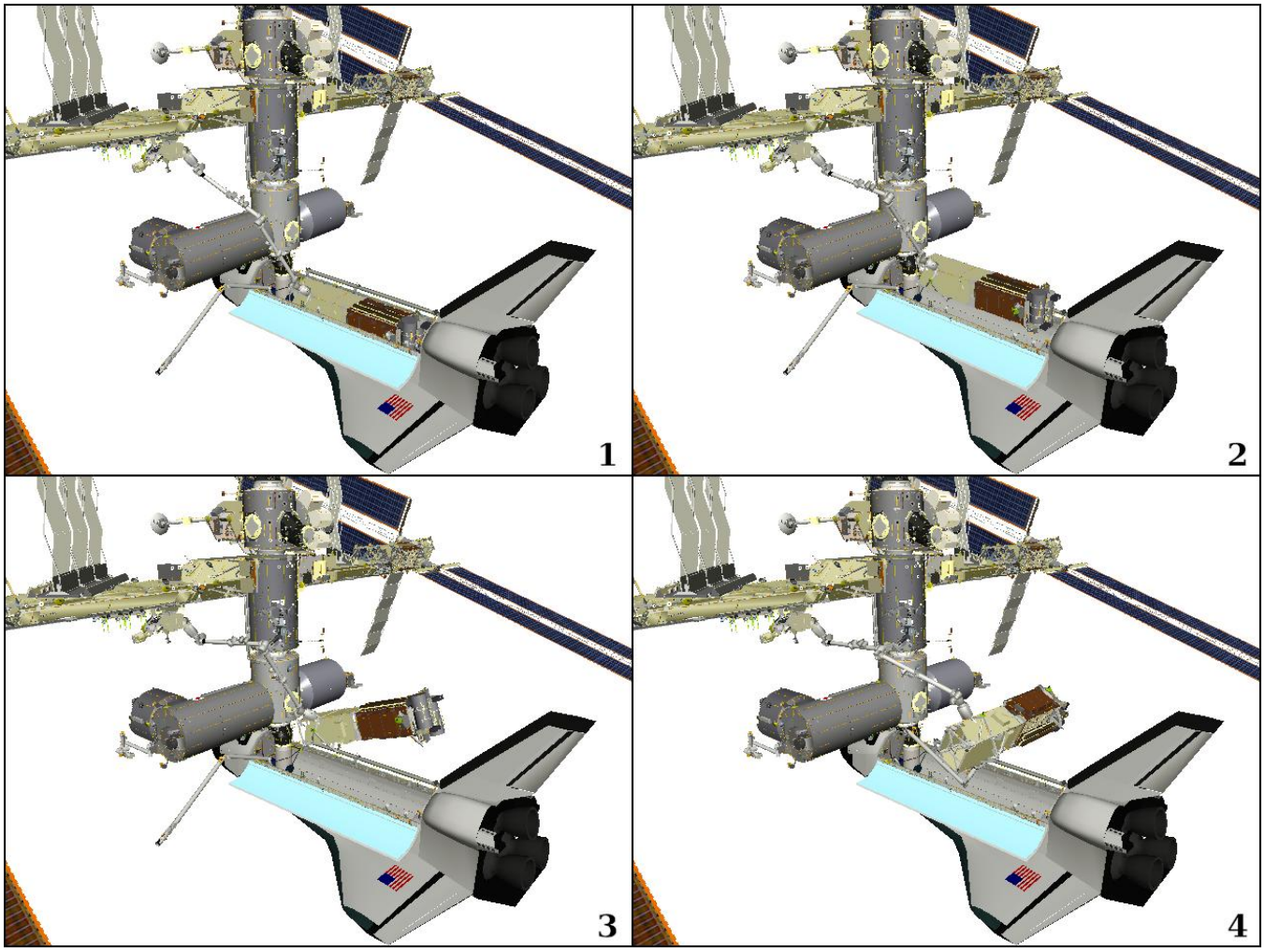

Starboard 6 station robotic arm maneuver and installation are shown below

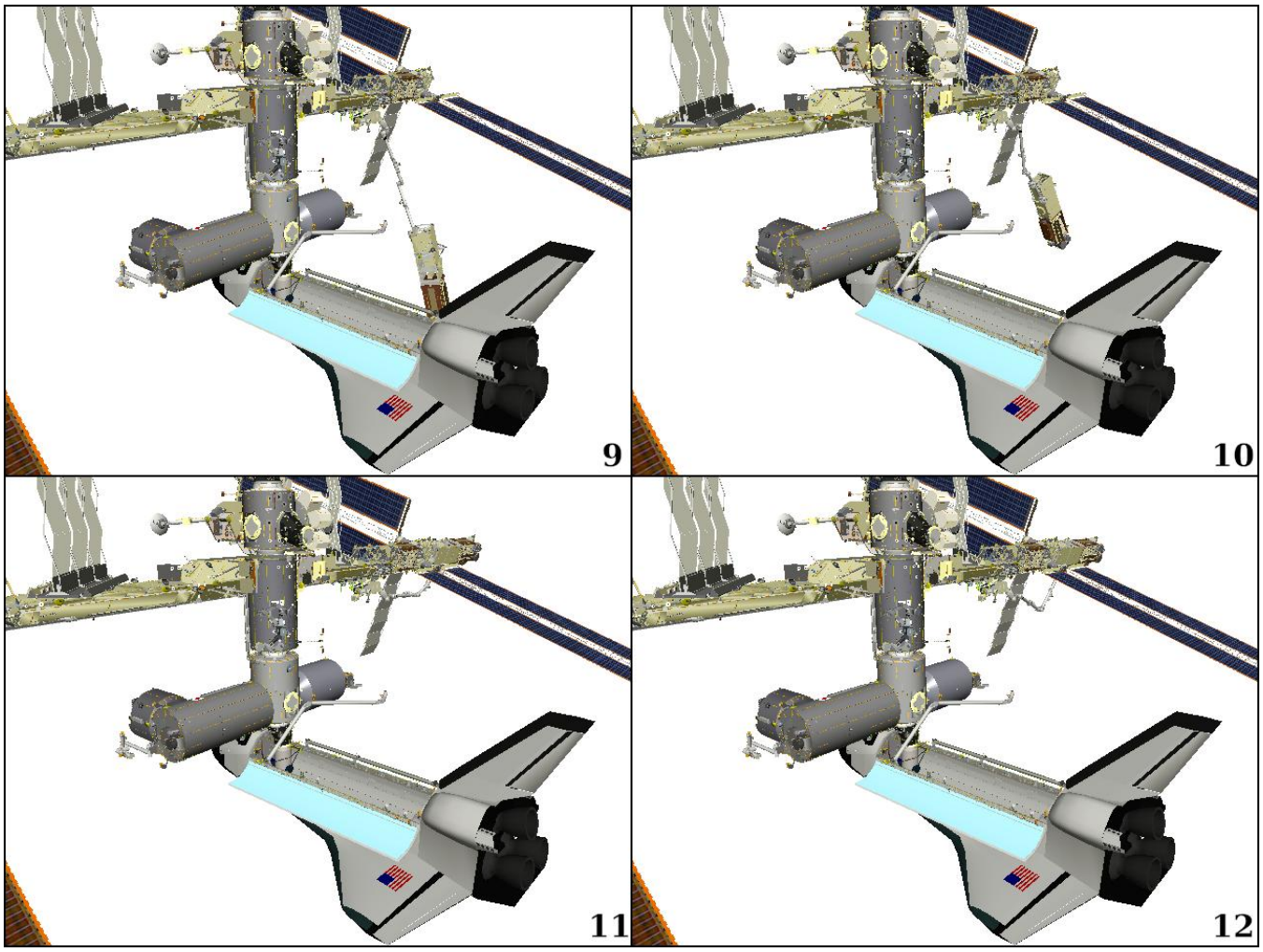

This page intentionally blank

RENDEZVOUS AND DOCKING

Rendezvous begins with a precisely timed launch which puts the shuttle on a trajectory to chase the International Space Station. A series of engine firings over the next two days will bring Discovery to a point about 50,000 feet behind the station.

Once there, Discovery will start its final approach. About 2.5 hours before docking, the shuttle's jets will be fired during what is called the terminal initiation burn. The shuttle will cover the final miles to the station during the next orbit.

As Discovery moves closer to the station, its rendezvous radar system and trajectory control sensor will give the crew range and closing-rate data. Several small correction burns will place Discovery about 1,000 feet below the station.

Commander Lee Archambault, with help from Pilot Tony Antonelli and other crew members, will manually fly the shuttle for the remainder of the approach and docking.

He will stop Discovery about 600 feet below the station. Once he determines there is proper lighting, he will maneuver Discovery through a nine-minute backflip called the Rendezvous Pitch Maneuver. That allows the station crew to take as many as 300 digital pictures of the shuttle's heat shield.

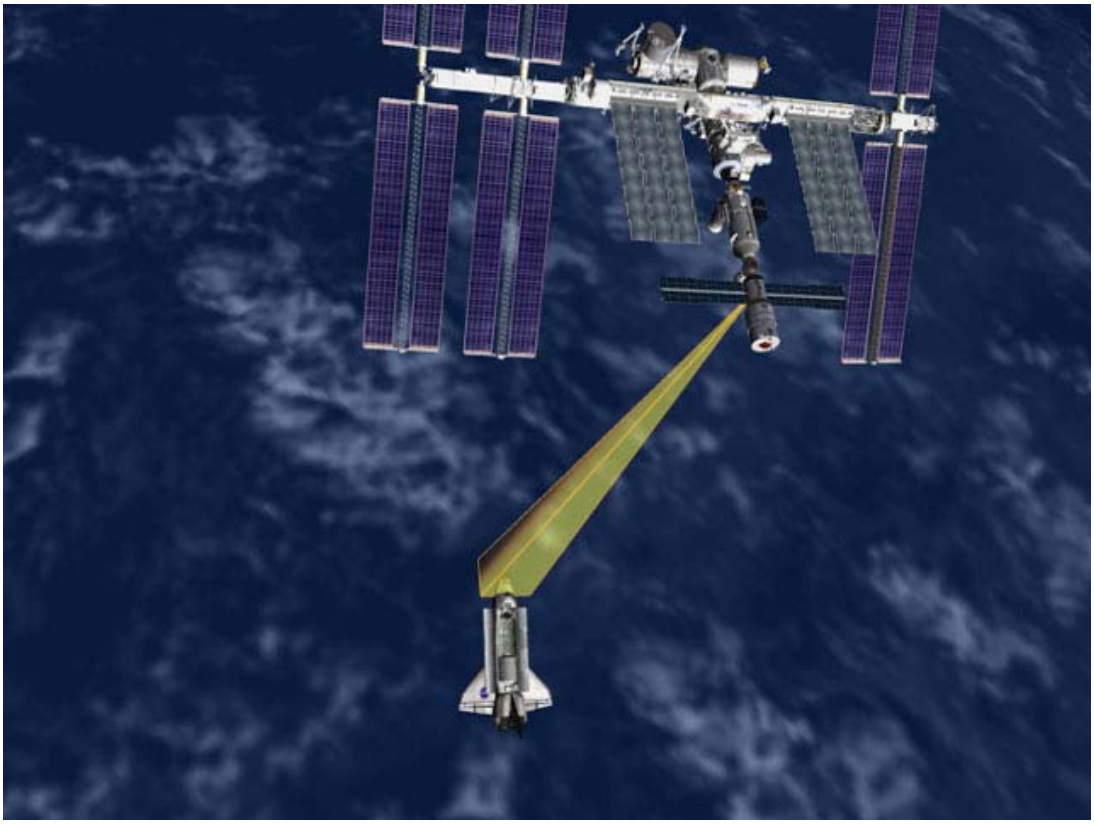

The above image illustrates Discovery conducting the Rendezvous Pitch Maneuver before docking to the space station.

Station crew members E. Michael Fincke and Sandra Magnus will use digital cameras with 400 mm and 800 mm lenses to photograph Discovery's upper and bottom surfaces through windows of the Zvezda Service Module. The 400 mm lens provides up to 3-inch resolution and the 800 mm lens up to 1-inch resolution.

The photography is one of several techniques used to inspect the shuttle's thermal protection system for possible damage. Areas of special interest include the thermal protection tiles, the reinforced carbon-carbon of the nose and leading edges of the wings, landing gear doors and the elevon cove.

The photos will be downlinked through the station's Ku-band communications system for analysis by systems engineers and mission managers.

When Discovery completes its back flip, it will be back where it started, with its payload bay facing the station.

Archambault then will fly Discovery through a quarter circle to a position about 400 feet directly in front of the station. From that point he will begin the final approach to docking to the Pressurized Mating Adapter 2 at the forward end of the Harmony node.

The shuttle crew members operate laptop computers processing the navigational data, the laser range systems and Discovery's docking mechanism.

Using a video camera mounted in the center of the Orbiter Docking System, Archambault will line up the docking ports of the two spacecraft. If necessary, he will pause 30 feet from the station to ensure proper alignment of the docking mechanisms.

He will maintain the shuttle's speed relative to the station at about one-tenth of a foot per second, while both Discovery and the station are moving at about 17,500 mph. He will keep the docking mechanisms aligned to a tolerance of three inches.

When Discovery makes contact with the station, preliminary latches will automatically attach the two spacecraft. The shuttle's steering jets will be deactivated to reduce the forces acting at the docking interface. Shock absorber springs in the docking mechanism will dampen any relative motion between the shuttle and station.

Once motion between the shuttle and the station has been stopped, the docking ring will be retracted to close a final set of latches between the two vehicles.

UNDOCKING, SEPARATION AND DEPARTURE

At undocking time, the hooks and latches will be opened and springs will push the shuttle away from the station. Discovery's steering jets will be shut off to avoid any inadvertent firings during the initial separation.

Once Discovery is about two feet from the station and the docking devices are clear of one another, Antonelli will turn the steering jets back on and will manually control Discovery within a tight corridor as the shuttle separates from the station.

This image depicts the space shuttle's undocking and initial separation from the space station.

Discovery will move to a distance of about 450 feet, where Antonelli will begin to fly around the station. This maneuver will occur only if propellant margins and mission timeline activities permit.

Once Discovery completes 1.5 revolutions of the complex, Antonelli will fire Discovery's jets to leave the area. The shuttle will move about 46 miles from the station and remain there while ground teams analyze data from the late inspection of the shuttle's heat shield. The distance is close enough to allow the shuttle to return to the station in the unlikely event that the heat shield is damaged, preventing the shuttle's safe re-entry.

This page intentionally blank

SPACEWALKS

Astronaut Steve Swanson, STS-119 mission specialist, dons a training version of the Extravehicular Mobility Unit (EMU) spacesuit before being submerged in the waters of the Neutral Buoyancy Laboratory (NBL) near NASA's Johnson Space Center. Suit technicians assist Swanson.

The four spacewalks of the STS-119 mission will feature a variety of tasks. The highlight is the installation of the final pair of solar arrays that will bring the station up to full power (and balance it out, appearance wise). To prepare for the next mission to the station, STS-127, the astronauts will move the Crew and Equipment Translation Aid carts out of the way of the mobile transporter, much as was done during the STS-126 mission.

Mission Specialists Steve Swanson, Richard Arnold, and Joseph Acaba will spend a combined total of 26 hours outside the station on flight days 5, 7, 9 and 11. Swanson, the lead spacewalker for the mission, will suit up for the first, second and fourth spacewalks in a spacesuit marked with solid red stripes. He is a veteran spacewalker with two extravehicular activities, or EVAs, performed during the STS-117 flight in 2007.

Arnold and Acaba will perform their first spacewalks. Arnold will participate in the first, third and fourth spacewalks and wear an all white spacesuit, while Acaba will wear a spacesuit with broken red stripes for spacewalks two and three.

On each EVA day, a spacewalker inside the station will act as the intravehicular officer, or spacewalk choreographer. And Mission Specialist John Phillips will work with the spacewalkers from the inside to operate the station's robotic arm as needed.

Preparations will start the night before each spacewalk, when the astronauts spend time in the station's Quest airlock. This practice is called the campout prebreathe protocol and is used to purge nitrogen from the spacewalkers' systems and prevent decompression sickness, also known as "the bends."

During the campout, the two astronauts performing the spacewalk will isolate themselves inside the airlock while the air pressure is lowered to 10.2 pounds per square inch, or psi. The station is kept at the near-sea-level pressure of 14.7 psi. The morning of the spacewalk, the astronauts will wear oxygen masks while the airlock's pressure is raised back to 14.7 psi for an hour and the hatch between the airlock and the rest of the station is opened. That allows the spacewalkers to perform their morning routines before returning to the airlock, where the air pressure is lowered again. Approximately 50 minutes after the spacewalkers don their spacesuits, the prebreathe protocol will be complete.

The procedure enables spacewalks to begin earlier in the crew's day than was possible before the protocol was adopted.

EVA-1

Duration: 6 hours, 30 minutes
Crew: Swanson and Arnold

EVA Operations

- Install final starboard truss element (S6)
- Prepare truss element for solar array deploy

The first spacewalk of the mission will be devoted to installing the station's new truss segment and preparing the segment's solar arrays for unfolding on the eighth day of the mission. Swanson and Arnold will move to the S5 – or Starboard 5 – segment of the truss and make sure that the station's robotic arm has the new S6 truss segment in the correct position for its installation. It should be about 150 centimeters (4.9 feet) from the end of the S5 truss.

From the robotic arm workstation inside the Destiny laboratory, Phillips then will move the segment to a point 30 centimeters (11.8 inches) away from the end of the S5 truss, while Swanson and Arnold monitor clearances to ensure proper alignment. On their "go," Phillips will move the segment to 15 centimeters (about 6 inches) for another check before making contact.

Assuming everything is correctly aligned, Arnold will engage a capture latch to allow the station's truss to support the new segment, rather than the robotic arm. Then Swanson will tighten the four bolts that attach the segment to the station, and Arnold will attach four S6 grounding straps to S5.

With S6 safely attached to S5, Swanson and Arnold can begin hooking up the four connections that will allow power and data to pass from one segment to the other. After that, Swanson and Arnold split up. Arnold will release the restraints holding the blanket box that contains the solar array blankets, so that the arrays can be unfolded later.

Spacewalks 1 and 4

Swanson, meanwhile, will have two tasks. First he'll prepare the S6 radiator panels to be unfolded. He'll remove the six cinches that keep the panels folded together, and remove two bars that prevent them from unfolding. Afterward, flight controllers at the Mission Control Center in Houston will be able to command the radiator to unfold.

Swanson then will move to the beta gimbal assembly – or BGA – which allows the solar array wings to twist as they track the sun. The BGA is kept from rotating during launch by a keel fastener. Swanson will remove the fastener so he can rotate the BGA into place for the unfolding on the solar array wings. After he's done, he'll reinstall the fastener and remove some launch restraints on the BGA.

Swanson and Arnold then will reunite and rotate the blanket boxes into position for the unfolding of the arrays within them. Swanson will work on the two boxes on the bottom, while Arnold works on the two on the top.

Their last tasks will be to remove thermal covers from the system's electronic control and sequential control units and jettison them behind the station to burn up in the Earth's atmosphere.

Spacewalk 2

EVA-2

Duration: 6 hours, 30 minutes
Crew: Swanson and Acaba

EVA Operations

- P6 battery prep
- P3 nadir Unpressurized Cargo Carrier Attachment System and S3 outboard, zenith Payload Attachment System deploy
- Radiator beam valve module thermal cover repair
- P1/P3 fluid jumper install
- Flex hose rotary coupler clamp release
- Tool stanchion relocation
- Foot restraint retrieval

Swanson and Acaba's first task during this spacewalk will be to loosen two bolts on the battery on the P6 – or Port 6 – arrays. The battery will be replaced during the STS-127 mission.

From there, they'll continue working on the port side of the station's truss, on the bottom of the P3 segment, to prepare an unpressurized cargo carrier attachment system for use. The

system allows cargo to be attached to the station's truss. To do so, the spacewalkers will first remove two truss braces blocking access to the system. That will allow them to swing the system out, replace the braces, and attach the system to the outside of the truss.

Following that task, Swanson will work on repairing a thermal cover over a quick disconnect on the first port segment's radiator beam valve module. Acaba, meanwhile, will work between the first and third port segments to install two fluid jumpers, by disconnecting them from the panels they're currently connected to and reconnecting them on new panels. The two spacewalkers then will reunite at the flex hose rotary coupler on P1 to release clamps holding a contingency hose down. The clamps were used to hold the hose in place during the equipment's launch to the station.

After that work is complete, Swanson and Acaba will move to the starboard side of the station's truss to prepare a payload attachment system for use on the top of the outboard side of the S3 segment, in a process similar to preparing the unpressurized cargo carrier attachment system for use. Both systems are used to attach equipment to the station's truss.

The final tasks of the spacewalk will be for Swanson to relocate a tool stanchion from the station's zenith truss segment to a worksite on the exterior of the Destiny laboratory, and for Acaba to retrieve a foot restraint on the toll stanchion and bring it into the station for repair.

EVA-3

Duration: 6 hours, 30 minutes
Crew: Arnold and Acaba

EVA Operations:

- Crew and Equipment Translation Aid cart relocation
- Dextre thermal cover maintenance/removal
- Robotic arm latching end effector lubrication
- S1/S3 bus bolt controller connector swap
- S3 fluid jumper installation
- S1 flex hose rotary coupler clamp release
- P1 and S0 remote power control module replacement

Arnold and Acaba will begin the mission's third spacewalk by moving one of the station's two Crew and Equipment and Translation Aid – or CETA – carts. The carts were moved to the port side of the station's truss during the previous mission to give the robotic arm's mobile transporter the best possible access to the starboard truss for the installation of the new truss segment and solar arrays. With that work done, one of the carts will be moved back to the station's port side, leaving a cart for use on either side of the truss.

Spacewalk 3

Arnold will prepare the cart to be moved from P1 to S1 by releasing its brakes and wheel bogies. Acaba will carry it to its new home on S1 aboard the station's robotic arm. Arnold then will move to the site and be ready to help Arnold reinstall the cart.

Arnold then will take his turn on the station's robotic arm, which will maneuver him into place to work on the station's special purpose dexterous manipulator – also known as Dextre – on the exterior of the Destiny laboratory. Arnold will be re-securing two thermal covers on Dextre's orbital replacement unit tool changeout mechanism and removing a thermal cover on one of its electrical platforms.

When he's done with that, he'll climb off the robotic arm to lubricate the latching snares on its end effector, the mechanism that allows the arm to hold on to grapple fixtures or equipment. During the previous shuttle mission, the same lubrication was performed on the other end of the robotic arm – the arm has two end effectors, which allows it to move end-over-end to various worksites on the station. The snares have been experiencing some sticky spots that caused kinks in them, and during the previous mission, the

lubrication was able to help clear up that problem. Arnold will use a grease gun to apply the lubrication and use needlenose pliers to maneuver the snares.

While Arnold is working on Dextre and the robotic arm, Acaba will perform several tasks on the starboard truss, mirroring some of the work he and Arnold did on the port side of the truss during the second spacewalk. He'll install fluid jumpers between the S1 and S3 truss segments and release clamps on the S1 flex hose rotary coupler's contingency hose. He'll also swap a bolt bus controller connector on the truss' segment-to-segment attach system.

Arnold and Acaba will finish the spacewalk by replacing failed remote power control modules on the S0 and P1 truss segments.

EVA-4

Duration: 6 hours, 30 minutes
Crew: Swanson and Arnold

EVA Operations:

- Global Positioning System (GPS) antenna installation
- Z1 patch panel connector swap
- S1/P1 radiator photography
- Wireless Video System installation
- S3 outboard, zenith and inboard, nadir PAS deploy

Swanson and Arnold will work separately for the first half of the mission's final scheduled spacewalk. Swanson will begin by installing a GPS antenna on the exterior of the Japanese logistics module. The antenna will be the second of two to be installed (the first was installed during the STS-126 mission) and will be used to guide the Japanese H-II Transfer Vehicle to the station later in the year. After that, he'll swap connectors on a patch panel on the station's zenith truss segment.

Meanwhile, Arnold will photograph the radiators on the first port and starboard truss segments, using both regular and infrared cameras. In September, ground controllers noticed damage to one panel of the starboard radiator, and the photos will help them determine how the damage is affecting its operation.

After that, Swanson and Arnold will work together. First they'll install a wireless video system external transceiver assembly, or WETA, which supports the transmission of video from spacewalkers' helmet cameras, on the S3 truss segment. To do so, Swanson will remove a dummy box currently in the location, and then attach the WETA to a stanchion. Arnold will connect three cables to the assembly.

Afterward, Swanson and Arnold will prepare two more payload attachment systems on the S3 truss segment – one on the outboard side of the bottom of the segment, and one on the inboard side of the top of the segment. They will use the same process employed during the mission's second spacewalk.

This page intentionally blank

EXPERIMENTS

The space shuttle and International Space Station have an integrated research program that optimizes the use of shuttle crew members and long-duration space station crew members to address research questions in a variety of disciplines.

For information on science on the station, visit:

http://www.nasa.gov/mission_pages/station/science/index.html

or

http://iss-science.jsc.nasa.gov/index.cfm

Detailed information is located at:

http://www.nasa.gov/mission_pages/station/science/experiments/Expedition.html

DETAILED TEST OBJECTIVES

Detailed Test Objectives (DTOs) are aimed at testing, evaluating or documenting space shuttle systems or hardware, or proposed improvements to the space shuttle or space station hardware, systems and operations.

SDTO 13005-U ISS Structural Life and Life Validation and Extension

The purpose of this Station Development Test Objective (SDTO) is to guarantee safety of the station structure and crew by validating the in-orbit math models that were created for the space station. The test will be used to authenticate critical interface loads and to help improve predictions for fatigue of components on the station.

The test will provide dynamic loads information for engineers to use in creating precise models that can be used for analysis. In-orbit data may aid in detecting structural anomalies, and the station's response to actual loading events aids in postflight reconstruction of loads that help determine structural life usage.

The test requires actual, or educated estimates of, input and actual in-orbit sensor measurements of the station response. Measurement of the force input, such as thruster firing sequences or video of crew activity, and the station's response will aid in the reconstruction of station loads and structural life usage over the lifetime of the station, thus allowing the structure's life to be extended.

All of the in-orbit dynamic tests previously were performed on models in which the International Space Station and orbiter were docked.

There are four such tests planned for STS-119.

SDTO 25007-U SPATIAL DIFFERENCES IN CO2 CONCENTRATIONS ON ISS (PART 2)

The purpose of this DTO is to determine the spatial and temporal variations in carbon dioxide (CO_2) concentrations under specific conditions that can occur within the space station. Carbon dioxide is a physiologically-active compound exhaled in quantities proportional to the rate of human metabolism. Under conditions where the rate of crew metabolism is high or there is limited ventilation, it may accumulate to concentrations that could affect crew health.

The purpose of this investigation is to use the Carbon Dioxide Monitor (CDM) to determine the magnitude of local accumulations under conditions where some accumulation might be expected. The findings can be compared with physiological effects known to be associated with carbon dioxide exposure to determine the magnitude of effects that can be expected by the crew.

The spatial and temporal variations in concentrations as a result of crew exercise will be measured near the person's breathing zone and a short distance away, but still in the exercise area. The monitoring sessions should last the length of the exercise sessions.

The carbon dioxide concentration within a sleep station will be measured during normal ventilation of the station, and when airflow to the sleep station is disabled. These monitoring sessions are conducted during waking hours only with the sleep station doors closed. These results will assist in understanding the degree of hazard associated with a potential failure of ventilation to the sleep station.

Variations in carbon dioxide concentrations as a result of confinement to poorly ventilated areas, and certain carbon dioxide intensive activities, will be measured near the person's breathing zone, and a short distance away, but still in the inhabited module. The monitoring sessions should last the length of the activity or the entire crew day, whichever is appropriate.

SDTO 13004-U RUSSIAN VEHICLE DOCKING/UNDOCKING LOADS ON ISS

The International Space Station structure has a 15-year life requirement. The overall objective is to guarantee safety of the space station structure and crew. Specific objectives are to accurately determine the structural life usage, to expand station operations, and to increase the life of the structure. Structural life estimates are based on worst-case loading conditions, using finite element models of structures and forcing-function estimations. Experimenters want to better understand these loads, and reduce the conservatism through post-flight reconstructions using correlated models, validated forcing functions, measured station response data and actual on-orbit loading conditions. This reconstruction requires actual or educated estimates of input and actual output of the station response.

Measurement of the force input, such as thruster firing sequences or video of crew activity, and station response will aid reconstruction of station loads and structural life usage over the lifetime of the station, and allow life extension of the structure.

CONSTELLATION PROGRAM DETAILED TEST OBJECTIVES

The Space Shuttle Program will be performing Detailed Test Objectives (DTOs) for the Constellation Program to help test and evaluate hardware, systems and operations for the new program.

Crew Seat

The purpose is to obtain vibration specifications for unimpeded crew performance. The detailed test objective will be done in conjunction with another test -- not planned for STS-119 -- that will measure crew visual performance during launch to help determine how the crew's computer displays can be made more readable.

Three crew seats will be instrumented for three shuttle flights, STS-119, 127 and 128. These seats -- numbers 3, 5 and 6 -- are the mission

specialists' seats, one on the right, one on the left and one in the center position.

Each seat will have a sensor data collection box fed by three accelerometers, one on the headrest, one on the back of the seat and one on the seat bottom. The information will be collected during launch and retrieved as the end of the mission.

Boundary Layer Transition

This flight experiment is designed to demonstrate that a protuberance on a BRI-18 tile is safe to fly. BRI-18 is a tile originally developed as a potential heat shield upgrade on the orbiters and is being considered for use on the Orion crew exploration vehicles. Due to Orion's geometry, the tiles would experience re-entry heating temperatures up to 3,400 degrees Fahrenheit, about 500 degrees higher than the 2,900 degrees experienced by shuttles.

Tested successfully in arc jet facilities, this phase of the experiment will gather information on the effect of high Mach number boundary layer transition caused by a protuberance on the space shuttle during the re-entry trajectory.

Boundary layer transition is a disruption of the smooth, laminar flow of supersonic air across the shuttle's belly and occurs normally when the shuttle's velocity has dropped to around eight to 10 times the speed of sound, starting toward the back of the heat shield and moving forward. Known as "tripping the boundary layer," this phenomenon can create eddies of turbulence that, in turn, result in higher downstream heating.

For the experiment, a heat shield tile with a "speed bump" on it was installed under Discovery's left wing to intentionally disturb the airflow in a controlled manner and make the airflow turbulent. The bump is four inches long and 0.3 inch wide. Ten thermocouples will be installed on the tile with the protuberance and on tiles downstream to capture test data.

The experiment will receive additional support from a U.S. Navy aircraft that will check the orbiter's exterior temperatures. A Navy NP-3D Orion will fly below Discovery during re-entry and use a long-range infrared camera to remotely monitor heating to the shuttle's lower surface. The imagery captured and recorded will complement the information collected by the onboard instruments. Both will be used to verify and improve design efforts for future spacecraft.

SPACE SHUTTLE SOLID ROCKET MOTOR PRESSURE OSCILLATION DATA GATHERING

The Space Shuttle Program is gathering data on five shuttle flights to gain a greater understanding of the pressure oscillation, or periodic variation, phenomena that regularly occurs within solid rocket motors. The pressure oscillation that is observed in solid rocket motors is similar to the hum made when blowing into a bottle. At 1.5 psi, or pounds per square inch, a pressure wave will move up and down the motor from the front to the rear, generating acoustic noise as well as physical loads in the structure. These data are necessary to help propulsion engineers confirm modeling techniques of pressure oscillations and the loads they create. As NASA engineers develop alternate propulsion designs for use in NASA, they will take advantage of current designs from which they can learn and measure. In an effort to obtain data to correlate pressure oscillation with the loads it can generate, the shuttle program is using two data systems to

gather detailed information. Both systems are located on the top of the solid rocket motors inside the forward skirt. Because of rescheduling, STS-119 will only have the Intelligent Pressure Transducer installed.

The Intelligent Pressure Transducer, or IPT, is a stand-alone pressure transducer with an internal data acquisition system that will record pressure data to an internal memory chip. The data will be downloaded to a computer after the booster has been recovered and returned to the Solid Rocket Booster Assembly and Refurbishment Facility at NASA's Kennedy Space Center, Fla. This system has been used on numerous full scale static test motors in Utah and will provide engineers with a common base to compare flight data to ground test data.

The Enhanced Data Acquisition System, or EDAS, is a data acquisition system that will record pressure data from one of the Reusable Solid Rocket Booster Operational Pressure Transducers, or OPT, and from accelerometers and strain gages placed on the forward skirt walls. These data will provide engineers with time synchronized data that will allow them to determine the accelerations and loads that are transferred through the structure due to the pressure oscillation forces.

The EDAS instrumentation is mounted in the lower portion of the forward skirt, and therefore is inaccessible after mating to the forward segment. Since this booster stack was built for the STS-125 Hubble mission, prior to STS-126, NASA was unable to install the EDAS instrumentation. The decision was made to gather IPT data alone, instead of missing an opportunity to gather any data.

SHUTTLE REFERENCE DATA

SHUTTLE ABORT MODES

Redundant Sequence Launch Sequencer (RSLS) Aborts

These occur when the on-board shuttle computers detect a problem and command a halt in the launch sequence after taking over from the ground launch sequencer and before solid rocket booster ignition.

Ascent Aborts

Selection of an ascent abort mode may become necessary if there is a failure that affects vehicle performance, such as the failure of a space shuttle main engine or an orbital maneuvering system engine. Other failures requiring early termination of a flight, such as a cabin leak, might also require the selection of an abort mode. There are two basic types of ascent abort modes for space shuttle missions: intact aborts and contingency aborts. Intact aborts are designed to provide a safe return of the orbiter to a planned landing site. Contingency aborts are designed to permit flight crew survival following more severe failures when an intact abort is not possible. A contingency abort would generally result in a ditch operation.

Intact Aborts

There are four types of intact aborts: abort to orbit (ATO), abort once around (AOA), transoceanic abort landing (TAL) and return to launch site (RTLS).

Return to Launch Site

The RTLS abort mode is designed to allow the return of the orbiter, crew, and payload to the launch site, KSC, approximately 25 minutes after liftoff.

The RTLS profile is designed to accommodate the loss of thrust from one space shuttle main engine between liftoff and approximately four minutes 20 seconds, after which not enough main propulsion system propellant remains to return to the launch site. An RTLS can be considered to consist of three stages – a powered stage, during which the space shuttle main engines are still thrusting; an external tank separation phase; and the glide phase, during which the orbiter glides to a landing at the KSC. The powered RTLS phase begins with the crew selection of the RTLS abort, after solid rocket booster separation. The crew selects the abort mode by positioning the abort rotary switch to RTLS and depressing the abort push button. The time at which the RTLS is selected depends on the reason for the abort. For example, a three-engine RTLS is selected at the last moment, about 3 minutes, 34 seconds into the mission; whereas an RTLS chosen due to an engine out at liftoff is selected at the earliest time, about 2 minutes, 20 seconds into the mission (after solid rocket booster separation).

After RTLS is selected, the vehicle continues downrange to dissipate excess main propulsion system propellant. The goal is to leave only enough main propulsion system propellant to be able to turn the vehicle around, fly back toward the KSC and achieve the proper main engine cutoff conditions so the vehicle can glide to the KSC after external tank separation. During the downrange phase, a pitch-around maneuver is initiated (the time depends in part on the time of a space shuttle main engine failure) to orient the orbiter/external tank configuration to a heads-up attitude, pointing toward the launch site. At this time, the vehicle is still moving away from the launch site, but

the space shuttle main engines are now thrusting to null the downrange velocity. In addition, excess orbital maneuvering system and reaction control system propellants are dumped by continuous orbital maneuvering system and reaction control system engine thrustings to improve the orbiter weight and center of gravity for the glide phase and landing.

The vehicle will reach the desired main engine cutoff point with less than 2 percent excess propellant remaining in the external tank. At main engine cutoff minus 20 seconds, a pitch down maneuver (called powered pitch-down) takes the mated vehicle to the required external tank separation attitude and pitch rate. After main engine cutoff has been commanded, the external tank separation sequence begins, including a reaction control system maneuver that ensures that the orbiter does not recontact the external tank and that the orbiter has achieved the necessary pitch attitude to begin the glide phase of the RTLS.

After the reaction control system maneuver has been completed, the glide phase of the RTLS begins. From then on, the RTLS is handled similarly to a normal entry.

Transoceanic Abort Landing

The TAL abort mode was developed to improve the options available when a space shuttle main engine fails after the last RTLS opportunity but before the first time that an AOA can be accomplished with only two space shuttle main engines or when a major orbiter system failure, for example, a large cabin pressure leak or cooling system failure, occurs after the last RTLS opportunity, making it imperative to land as quickly as possible.

In a TAL abort, the vehicle continues on a ballistic trajectory across the Atlantic Ocean to land at a predetermined runway. Landing occurs about 45 minutes after launch. The landing site is selected near the normal ascent ground track of the orbiter to make the most efficient use of space shuttle main engine propellant. The landing site also must have the necessary runway length, weather conditions and U.S. State Department approval. The three landing sites that have been identified for a launch are Zaragoza, Spain; Moron, Spain; and Istres, France.

To select the TAL abort mode, the crew must place the abort rotary switch in the TAL/AOA position and depress the abort push button before main engine cutoff (Depressing it after main engine cutoff selects the AOA abort mode). The TAL abort mode begins sending commands to steer the vehicle toward the plane of the landing site. It also rolls the vehicle heads up before main engine cutoff and sends commands to begin an orbital maneuvering system propellant dump (by burning the propellants through the orbital maneuvering system engines and the reaction control system engines). This dump is necessary to increase vehicle performance (by decreasing weight) to place the center of gravity in the proper place for vehicle control and to decrease the vehicle's landing weight. TAL is handled like a normal entry.

Abort to Orbit

An ATO is an abort mode used to boost the orbiter to a safe orbital altitude when performance has been lost and it is impossible to reach the planned orbital altitude. If a space shuttle main engine fails in a region that results in a main engine cutoff under speed, the MCC will determine that an abort mode is necessary

and will inform the crew. The orbital maneuvering system engines would be used to place the orbiter in a circular orbit.

Abort Once Around

The AOA abort mode is used in cases in which vehicle performance has been lost to such an extent that either it is impossible to achieve a viable orbit or not enough orbital maneuvering system propellant is available to accomplish the orbital maneuvering system thrusting maneuver to place the orbiter on orbit and the deorbit thrusting maneuver. In addition, an AOA is used in cases in which a major systems problem (cabin leak, loss of cooling) makes it necessary to land quickly. In the AOA abort mode, one orbital maneuvering system thrusting sequence is made to adjust the post-main engine cutoff orbit so a second orbital maneuvering system thrusting sequence will result in the vehicle deorbiting and landing at the AOA landing site (White Sands, N.M.; Edwards Air Force Base, Calif.; or the Kennedy Space Center, Fla). Thus, an AOA results in the orbiter circling the Earth once and landing about 90 minutes after liftoff.

After the deorbit thrusting sequence has been executed, the flight crew flies to a landing at the planned site much as it would for a nominal entry.

Contingency Aborts

Contingency aborts are caused by loss of more than one main engine or failures in other systems. Loss of one main engine while another is stuck at a low thrust setting also may necessitate a contingency abort. Such an abort would maintain orbiter integrity for in-flight crew escape if a landing cannot be achieved at a suitable landing field.

Contingency aborts due to system failures other than those involving the main engines would normally result in an intact recovery of vehicle and crew. Loss of more than one main engine may, depending on engine failure times, result in a safe runway landing. However, in most three-engine-out cases during ascent, the orbiter would have to be ditched. The inflight crew escape system would be used before ditching the orbiter.

Abort Decisions

There is a definite order of preference for the various abort modes. The type of failure and the time of the failure determine which type of abort is selected. In cases where performance loss is the only factor, the preferred modes are ATO, AOA, TAL and RTLS, in that order. The mode chosen is the highest one that can be completed with the remaining vehicle performance.

In the case of some support system failures, such as cabin leaks or vehicle cooling problems, the preferred mode might be the one that will end the mission most quickly. In these cases, TAL or RTLS might be preferable to AOA or ATO. A contingency abort is never chosen if another abort option exists.

Mission Control Houston is prime for calling these aborts because it has a more precise knowledge of the orbiter's position than the crew can obtain from on-board systems. Before main engine cutoff, Mission Control makes periodic calls to the crew to identify which abort mode is (or is not) available. If ground communications are lost, the flight crew has on-board methods, such as cue cards, dedicated displays and display information, to determine the abort region. Which abort mode is selected depends on the cause and timing of the failure causing the abort and which mode is safest or

improves mission success. If the problem is a space shuttle main engine failure, the flight crew and Mission Control Center select the best option available at the time a main engine fails.

If the problem is a system failure that jeopardizes the vehicle, the fastest abort mode that results in the earliest vehicle landing is chosen. RTLS and TAL are the quickest options (35 minutes), whereas an AOA requires about 90 minutes. Which of these is selected depends on the time of the failure with three good space shuttle main engines.

The flight crew selects the abort mode by positioning an abort mode switch and depressing an abort push button.

SHUTTLE ABORT HISTORY

RSLS Abort History

(STS-41 D) June 26, 1984

The countdown for the second launch attempt for Discovery's maiden flight ended at T-4 seconds when the orbiter's computers detected a sluggish valve in main engine No. 3. The main engine was replaced and Discovery was finally launched on Aug. 30, 1984.

(STS-51 F) July 12, 1985

The countdown for Challenger's launch was halted at T-3 seconds when on-board computers detected a problem with a coolant valve on main engine No. 2. The valve was replaced and Challenger was launched on July 29, 1985.

(STS-55) March 22, 1993

The countdown for Columbia's launch was halted by on-board computers at T-3 seconds following a problem with purge pressure readings in the oxidizer preburner on main engine No. 2. Columbia's three main engines were replaced on the launch pad, and the flight was rescheduled behind Discovery's launch on STS-56. Columbia finally launched on April 26, 1993.

(STS-51) Aug. 12, 1993

The countdown for Discovery's third launch attempt ended at the T-3 second mark when onboard computers detected the failure of one of four sensors in main engine No. 2 which monitor the flow of hydrogen fuel to the engine. All of Discovery's main engines were ordered replaced on the launch pad, delaying the shuttle's fourth launch attempt until Sept. 12, 1993.

(STS-68) Aug. 18, 1994

The countdown for Endeavour's first launch attempt ended 1.9 seconds before liftoff when on-board computers detected higher than acceptable readings in one channel of a sensor monitoring the discharge temperature of the high pressure oxidizer turbopump in main engine No. 3. A test firing of the engine at the Stennis Space Center in Mississippi on September 2nd confirmed that a slight drift in a fuel flow meter in the engine caused a slight increase in the turbopump's temperature. The test firing also confirmed a slightly slower start for main engine No. 3 during the pad abort, which could have contributed to the higher temperatures. After Endeavour was brought back to the Vehicle Assembly Building to be outfitted with three replacement engines, NASA managers set Oct. 2 as the date for Endeavour's second launch attempt.

Abort to Orbit History

(STS-51 F) July 29, 1985

After an RSLS abort on July 12, 1985, Challenger was launched on July 29, 1985.

Five minutes and 45 seconds after launch, a sensor problem resulted in the shutdown of center engine No. 1, resulting in a safe "abort to orbit" and successful completion of the mission.

SPACE SHUTTLE MAIN ENGINES

Developed in the 1970s by NASA's Marshall Space Flight Center, MSFC in Huntsville, Ala., the space shuttle main engine is the most advanced liquid-fueled rocket engine ever built. Every space shuttle main engine is tested and proven flight worthy at NASA's Stennis Space Center in south Mississippi, before installation on an orbiter. Its main features include variable thrust, high performance reusability, high redundancy and a fully integrated engine controller.

The shuttle's three main engines are mounted on the orbiter aft fuselage in a triangular pattern. Spaced so that they are movable during launch, the engines are used, in conjunction with the solid rocket boosters, to steer the shuttle vehicle.

Each of these powerful main engines is 14 feet long, weighs about 7,000 pounds and is 7.5 feet in diameter at the end of its nozzle.

The engines operate for about 8.5 minutes during liftoff and ascent, burning more than 500,000 gallons of super-cold liquid hydrogen and liquid oxygen propellants stored in the external tank attached to the underside of the shuttle. The engines shut down just before the shuttle, traveling at about 17,000 miles per hour, reaches orbit.

The main engine operates at greater temperature extremes than any mechanical system in common use today. The fuel, liquefied hydrogen at -423 degrees Fahrenheit, is the second coldest liquid on Earth. When it and the liquid oxygen are combusted, the temperature in the main combustion chamber is 6,000 degrees Fahrenheit, hotter than the boiling point of iron.

The main engines use a staged combustion cycle so that all propellants entering the engines are used to produce thrust, or power, more efficiently than any previous rocket engine. In a staged combustion cycle, propellants are first burned partially at high pressure and relatively low temperature, and then burned completely at high temperature and pressure in the main combustion chamber. The rapid mixing of the propellants under these conditions is so complete that 99 percent of the fuel is burned.

At normal operating level, each engine generates 490,847 pounds of thrust, measured in a vacuum. Full power is 512,900 pounds of thrust; minimum power is 316,100 pounds of thrust.

The engine can be throttled by varying the output of the pre-burners, thus varying the speed of the high-pressure turbopumps and, therefore, the flow of the propellant.

At about 26 seconds into ascent, the main engines are throttled down to 316,000 pounds of thrust to keep the dynamic pressure on the vehicle below a specified level, about 580 pounds per square foot, known as max q. Then, the engines are throttled back up to normal operating level at about 60 seconds. This reduces stress on the vehicle. The main engines are throttled down again at about seven minutes, 40 seconds into the mission to maintain three g's, three times the Earth's gravitational pull, reducing stress on the crew and the vehicle. This acceleration level is about one-third the acceleration experienced on previous crewed space vehicles.

About 10 seconds before main engine cutoff, or MECO, the cutoff sequence begins. About three seconds later the main engines are commanded to begin throttling at 10 percent thrust per second until they achieve 65 percent thrust. This is held for about 6.7 seconds, and the engines are shut down.

The engine performance has the highest thrust for its weight of any engine yet developed. In fact, one space shuttle main engine generates sufficient thrust to maintain the flight of two and one-half Boeing 747 airplanes.

The space shuttle main engine also is the first rocket engine to use a built-in electronic digital controller, or computer. The controller accepts commands from the orbiter for engine start, change in throttle, shutdown and monitoring of engine operation.

NASA continues to increase the reliability and safety of shuttle flights through a series of enhancements to the space shuttle main engines. The engines were modified in 1988, 1995, 1998, 2001 and 2007. Modifications include new high-pressure fuel and oxidizer turbopumps that reduce maintenance and operating costs of the engine, a two-duct powerhead that reduces pressure and turbulence in the engine, and a single-coil heat exchanger that lowers the number of post flight inspections required. Another modification incorporates a large-throat main combustion chamber that improves the engine's reliability by reducing pressure and temperature in the chamber.

The most recent engine enhancement is the Advanced Health Management System, or AHMS, which made its first flight in 2007. AHMS is a controller upgrade that provides new monitoring and insight into the health of the two most complex components of the space shuttle main engine — the high pressure fuel turbopump and the high pressure oxidizer turbopump. New advanced digital signal processors monitor engine vibration and have the ability to shut down an engine if vibration exceeds safe limits. AHMS was developed by engineers at Marshall.

After the orbiter lands, the engines are removed and returned to a processing facility at Kennedy Space Center, Fla., where they are rechecked and readied for the next flight. Some components are returned to the main engine's prime contractor, Pratt & Whitney Rocketdyne, West Palm Beach, Fla., for regular maintenance. The main engines are designed to operate for 7.5 accumulated hours.

SPACE SHUTTLE SOLID ROCKET BOOSTERS

The combination of reusable solid rocket motor segments and solid rocket booster subassemblies makes up the flight configuration of the space shuttle solid rocket boosters, or SRBs. The two SRBs provide the main thrust to lift the space shuttle off the launch pad and up to an altitude of about 150,000 feet, or 28 miles. The two SRBs carry the entire weight of the external tank and orbiter and transmit the weight load through their structure to the mobile launcher platform.

The primary elements of each booster are the motor, including case, propellant, igniter and nozzle; separation systems; operational flight instrumentation; recovery avionics; pyrotechnics; deceleration system; thrust vector control system; and range safety destruct system.

Each booster is attached to the external tank at the SRB aft frame by two lateral sway braces and a diagonal attachment. The forward end of each SRB is attached to the external tank at the forward end of the SRB forward skirt. On the launch pad, each booster also is attached to the mobile launcher platform at the aft skirt by four bolts and nuts that are severed by small explosives at liftoff.

Each booster has a sea level thrust of about 3.3 million pounds at launch. The SRBs are ignited after the three space shuttle main engines' thrust level is verified. They provide 71.4 percent of the thrust at liftoff and during first-stage ascent. Seventy-five seconds after separation, SRB apogee occurs at an altitude of about 220,000 feet, or 40 miles. Impact occurs in the ocean about 140 miles downrange.

The SRBs are used as matched pairs, each made up of four solid rocket motor segments. They are matched by loading each of the four motor segments from the same batches of propellant ingredients to minimize any thrust imbalance. The segmented-casing design assures maximum flexibility in fabrication and ease of transportation and handling. Each segment is shipped to the launch site on a heavy-duty rail car with a specially built cover.

Reusable Solid Rocket Motor (RSRM)

ATK Launch Systems of Brigham City, Utah, manufactures the Space Shuttle Reusable Solid Rocket Motor (RSRM) at its Utah facility. The RSRM is the largest solid rocket motor ever to fly, the only solid rocket motor rated for human flight and the first designed for reuse, one of the most important cost-saving factors in the nation's space program.

Each RSRM consists of four rocket motor segments, thrust vector control and an aft exit cone assembly. Each motor is just over 126 feet long and 12 feet in diameter. Of the motor's total weight of 1.25 million pounds, propellant accounts for 1.1 million pounds. Approximately 110,000 quality-control inspections, in addition to static tests, are conducted on each RSRM flight set to verify flawless operation.

Each space shuttle launch requires the boost of two RSRMs to lift the 4.5-million-pound shuttle vehicle. From ignition to the end of burn, about 123 seconds later, each RSRM generates an average thrust of 2.6 million pounds. By the time the twin SRBs have completed their task, the space shuttle orbiter has reached an altitude of 28 miles and is traveling at a speed in excess of 3,000 miles per hour. Before retirement, each RSRM can be used as many as 20 times.

The propellant mixture in each SRB motor consists of: ammonium perchlorate, an oxidizer; aluminum fuel; iron oxide, a catalyst; a polymer, which is a binder that holds the mixture together; and an epoxy curing agent. The propellant has the consistency of a pencil eraser. It has a molded internal geometry designed to provide required performance. This configuration provides high thrust at ignition and then reduces the thrust by about one-third 50 seconds after liftoff to prevent overstressing the vehicle during maximum dynamic pressure.

The RSRM segments are shipped by rail from ATK's Utah facility to the Kennedy Space Center, Fla. At KSC, United Space Alliance joins the segments with the forward assembly, aft skirt, frustum, and nose cap. The subassemblies contain the booster guidance system, the hydraulics system that steers the nozzles, Booster Separation Motors built by ATK, and parachutes.

Following the Challenger accident, detailed structural analyses were performed on critical structural elements of the SRB. Analyses were primarily focused in areas where anomalies had been noted during postflight inspection of recovered hardware.

One of these areas was the attach ring where the SRBs connect to the external tank. Areas of distress were noted in some of the fasteners where the ring attaches to the SRB motor case. The distress was attributed to the high loads encountered during water impact. To correct the situation and ensure higher strength margins during ascent, the attach ring was redesigned to encircle the motor case completely. Previously, the attach ring formed a "C" and encircled the motor case 270 degrees.

Additionally, special structural tests were done on the aft skirt. During this test program, an anomaly occurred in a critical weld between the hold-down post and skin of the skirt. A redesign was implemented to add reinforcement brackets and fittings in the aft ring of the skirt.

These two modifications added about 450 pounds to the weight of each SRB.

Beginning with the STS-8 mission, the nozzle expansion ratio of each booster is 7-to-79. The nozzle is gimbaled for thrust vector, or direction, control. Each SRB has its own redundant auxiliary power units and hydraulic pumps. The all-axis gimbaling capability is 8 degrees. Each nozzle has a carbon cloth liner that erodes and chars during firing. The nozzle is a convergent-divergent, movable design in which an aft pivot-point flexible bearing is the gimbal mechanism.

The cone-shaped aft skirt supports the weight of the entire vehicle as it rests on the mobile launcher platform. The four aft separation motors are mounted on the skirt. The aft section contains: avionics; a thrust vector control system that consists of two auxiliary power units and hydraulic pumps; hydraulic systems; and a nozzle extension jettison system.

The forward section of each booster contains avionics, a sequencer, forward separation motors, a nose cone separation system, drogue and main parachutes, a recovery beacon, a recovery light, a parachute camera on selected flights and a range safety system.

Each SRB has two integrated electronic assemblies, one forward and one aft. After burnout, the forward assembly turns on the recovery aids and initiates the release of the nose cap and frustum, a transition piece between the nose cone and solid rocket motor. The aft assembly, mounted in the external tank-to-SRB attach ring, connects with the forward assembly and the shuttle avionics systems for SRB ignition commands and nozzle thrust vector control. Each integrated electronic assembly has a multiplexer/demultiplexer, which sends or receives more than one message, signal or unit of information on a single communication channel.

Eight Booster Separation Motors, four in the nose frustum and four in the aft skirt of each SRB, thrust for 1.02 seconds when the SRBs separate from the external tank. Each solid rocket separation motor is 31.1 inches long and 12.8 inches in diameter.

After separation from the tank, the boosters descend. At a predetermined altitude, parachutes are deployed to decelerate them for a safe splashdown in the ocean. Just prior to splashdown, the aft exit cones, or nozzle extensions, are separated from the vehicles to

reduce water impact loads. Splashdown occurs approximately 162 miles from the launch site.

Location aids are provided for each SRB, frustum and drogue chutes, and main parachutes. These include a transmitter, antenna, strobe/converter, battery and salt-water switch electronics. The location aids are designed for a minimum operating life of 72 hours and, when refurbished, are considered usable up to 20 times. The flashing light is an exception. It has an operating life of 280 hours. The battery is used only once.

The recovery crew retrieves the SRBs, frustum and drogue chutes, and main parachutes. The nozzles are plugged, the solid rocket motors are dewatered, and the SRBs are towed back to the launch site. Each booster is removed from the water, and its components are disassembled and washed with fresh and deionized water to limit salt-water corrosion. The motor segments, igniter and nozzle are shipped back to ATK in Utah for refurbishment. The SRB nose caps and nozzle extensions are not recovered.

Each SRB incorporates a range safety system that includes a battery power source, receiver and decoder, antennas, and ordnance.

Hold-Down Posts

Each SRB has four hold-down posts that fit into corresponding support posts on the mobile launcher platform. Hold-down bolts secure the SRB and launcher platform posts together. Each bolt has a nut at each end, but only the top nut is frangible. The top nut contains two NASA standard detonators, or NSDs, which are ignited at solid rocket motor ignition commands.

When the two NSDs are ignited at each hold-down, the hold-down bolt travels downward because of the release of tension in the bolt (pretensioned before launch), NSD gas pressure and gravity. The bolt is stopped by the stud deceleration stand, which contains sand. The SRB bolt is 28 inches long and 3.5 inches in diameter. The frangible nut is captured in a blast container.

The solid rocket motor ignition commands are issued by the orbiter's computers through the master events controllers to the hold-down pyrotechnic initiator controllers, or PICs, on the mobile launcher platform. They provide the ignition to the hold-down NSDs. The launch processing system monitors the SRB hold-down PICs for low voltage during the last 16 seconds before launch. PIC low voltage will initiate a launch hold.

SRB Ignition

SRB ignition can occur only when a manual lock pin from each SRB safe and arm device has been removed. The ground crew removes the pin during prelaunch activities. At T minus five minutes, the SRB safe and arm device is rotated to the arm position. The solid rocket motor ignition commands are issued when the three SSMEs are at or above 90 percent rated thrust, no SSME fail and/or SRB ignition PIC low voltage is indicated, and there are no holds from the Launch Processing System, or LPS.

The solid rocket motor ignition commands are sent by the orbiter computers through the master events controllers, or MECs, to the safe and arm device NSDs in each SRB. A programmable interval clock, or PIC, single-channel capacitor discharge device controls the firing of each pyrotechnic device. Three signals must be present simultaneously for the PIC to generate the pyro firing output. These signals – arm, fire 1 and fire 2 – originate

in the orbiter General Purpose Computers, or GPCs, and are transmitted to the MECs. The MECs reformat them to 28-volt dc signals for the programmable interval clock. The arm signal charges the PIC capacitor to 40 volts dc.

The fire 2 commands cause the redundant NSDs to fire through a thin barrier seal down a flame tunnel. This ignites a pyro booster charge, which is retained in the safe and arm device behind a perforated plate. The booster charge ignites the propellant in the igniter initiator; and combustion products of this propellant ignite the solid rocket motor initiator, which fires down the length of the solid rocket motor, igniting the solid rocket motor propellant.

The GPC launch sequence also controls certain critical main propulsion system valves and monitors the engine-ready indications from the SSMEs. The Main Propulsion System, or MPS, start commands are issued by the on-board computers at T minus 6.6 seconds in a staggered start – engine three, engine two, engine one – all about within 0.25 of a second, and the sequence monitors the thrust buildup of each engine. All three SSMEs must reach the required 90 percent thrust within three seconds, otherwise, an orderly shutdown is commanded and safing functions are initiated.

Normal thrust buildup to the required 90 percent thrust level will result in the SSMEs being commanded to the liftoff position at T minus three seconds as well as the fire 1 command being issued to arm the SRBs. At T minus three seconds, the vehicle base bending load modes are allowed to initialize, with a movement of 25.5 inches measured at the tip of the external tank, with movement towards the external tank.

At T minus zero, the two SRBs are ignited under command of the four onboard computers; separation of the four explosive bolts on each SRB is initiated; the two T-0 umbilicals, one on each side of the spacecraft, are retracted; the onboard master timing unit, event timer and mission event timers are started; the three SSMEs are at 100 percent; and the ground launch sequence is terminated.

The solid rocket motor thrust profile is tailored to reduce thrust during the maximum dynamic pressure region.

Electrical Power Distribution

Electrical power distribution in each SRB consists of orbiter-supplied main dc bus power to each SRB via SRB buses A, B and C. In addition, orbiter main dc bus C supplies backup power to SRB buses A and B, and orbiter bus B supplies backup power to SRB bus C. This electrical power distribution arrangement allows all SRB buses to remain powered in the event one orbiter main bus fails.

The nominal dc voltage is 28 volts dc, with an upper limit of 32 volts dc and a lower limit of 24 volts dc.

Hydraulic Power Units

There are two self-contained, independent HPUs on each SRB. Each HPU consists of an auxiliary power unit, fuel supply module, hydraulic pump, hydraulic reservoir and hydraulic fluid manifold assembly. The auxiliary power units, or APUs, are fueled by hydrazine and generate mechanical shaft power to a hydraulic pump that produces hydraulic pressure for the SRB hydraulic system. The two separate HPUs and two hydraulic systems are located on the aft end of each SRB between the SRB nozzle and aft skirt. The HPU components

are mounted on the aft skirt between the rock and tilt actuators. The two systems operate from T minus 28 seconds until SRB separation from the orbiter and external tank. The two independent hydraulic systems are connected to the rock and tilt servoactuators.

The APU controller electronics are located in the SRB aft integrated electronic assemblies on the aft external tank attach rings.

The APUs and their fuel systems are isolated from each other. Each fuel supply module tank contains 22 pounds of hydrazine. The fuel tank is pressurized with gaseous nitrogen at 400 psi, which provides the force to expel the fuel from the tank to the fuel distribution line, maintaining a positive fuel supply to the APU throughout its operation.

The fuel isolation valve is opened at APU startup to allow fuel to flow to the APU fuel pump and control valves and then to the gas generator. The gas generator's catalytic action decomposes the fuel and creates a hot gas. It feeds the hot gas exhaust product to the APU two-stage gas turbine. Fuel flows primarily through the startup bypass line until the APU speed is such that the fuel pump outlet pressure is greater than the bypass line's. Then all the fuel is supplied to the fuel pump.

The APU turbine assembly provides mechanical power to the APU gearbox. The gearbox drives the APU fuel pump, hydraulic pump and lube oil pump. The APU lube oil pump lubricates the gearbox. The turbine exhaust of each APU flows over the exterior of the gas generator, cooling it, and is then directed overboard through an exhaust duct.

When the APU speed reaches 100 percent, the APU primary control valve closes, and the APU speed is controlled by the APU controller electronics. If the primary control valve logic fails to the open state, the secondary control valve assumes control of the APU at 112 percent speed. Each HPU on an SRB is connected to both servoactuators on that SRB. One HPU serves as the primary hydraulic source for the servoactuator, and the other HPU serves as the secondary hydraulics for the servoactuator. Each servoactuator has a switching valve that allows the secondary hydraulics to power the actuator if the primary hydraulic pressure drops below 2,050 psi. A switch contact on the switching valve will close when the valve is in the secondary position. When the valve is closed, a signal is sent to the APU controller that inhibits the 100 percent APU speed control logic and enables the 112 percent APU speed control logic. The 100 percent APU speed enables one APU/HPU to supply sufficient operating hydraulic pressure to both servoactuators of that SRB.

The APU 100 percent speed corresponds to 72,000 rpm, 110 percent to 79,200 pm, and 112 percent to 80,640 rpm.

The hydraulic pump speed is 3,600 rpm and supplies hydraulic pressure of 3,050, plus or minus 50, psi. A high-pressure relief valve provides overpressure protection to the hydraulic system and relieves at 3,750 psi.

The APUs/HPUs and hydraulic systems are reusable for 20 missions.

Thrust Vector Control

Each SRB has two hydraulic gimbal servoactuators, one for rock and one for tilt. The servoactuators provide the force and control to gimbal the nozzle for thrust vector control.

The space shuttle ascent thrust vector control, or ATVC, portion of the flight control system directs the thrust of the three shuttle main engines and the two SRB nozzles to control shuttle attitude and trajectory during liftoff and ascent. Commands from the guidance system are transmitted to the ATVC drivers, which transmit signals proportional to the commands to each servoactuator of the main engines and SRBs. Four independent flight control system channels and four ATVC channels control six main engine and four SRB ATVC drivers, with each driver controlling one hydraulic port on each main and SRB servoactuator.

Each SRB servoactuator consists of four independent, two-stage servovalves that receive signals from the drivers. Each servovalve controls one power spool in each actuator, which positions an actuator ram and the nozzle to control the direction of thrust.

The four servovalves in each actuator provide a force-summed majority voting arrangement to position the power spool. With four identical commands to the four servovalves, the actuator force-sum action prevents a single erroneous command from affecting power ram motion. If the erroneous command persists for more than a predetermined time, differential pressure sensing activates a selector valve to isolate and remove the defective servovalve hydraulic pressure, permitting the remaining channels and servovalves to control the actuator ram spool.

Failure monitors are provided for each channel to indicate which channel has been bypassed. An isolation valve on each channel provides the capability of resetting a failed or bypassed channel.

Each actuator ram is equipped with transducers for position feedback to the thrust vector control system. Within each servoactuator ram is a splashdown load relief assembly to cushion the nozzle at water splashdown and prevent damage to the nozzle flexible bearing.

SRB Rate Gyro Assemblies

Each SRB contains two RGAs, with each RGA containing one pitch and one yaw gyro. These provide an output proportional to angular rates about the pitch and yaw axes to the orbiter computers and guidance, navigation and control system during first-stage ascent flight in conjunction with the orbiter roll rate gyros until SRB separation. At SRB separation, a switchover is made from the SRB RGAs to the orbiter RGAs.

The SRB RGA rates pass through the orbiter flight aft multiplexers/demultiplexers to the orbiter GPCs. The RGA rates are then mid-value-selected in redundancy management to provide SRB pitch and yaw rates to the user software. The RGAs are designed for 20 missions.

SRB Separation

SRB separation is initiated when the three solid rocket motor chamber pressure transducers are processed in the redundancy management middle value select and the head-end chamber pressure of both SRBs is less than or equal to 50 psi. A backup cue is the time elapsed from booster ignition.

The separation sequence is initiated, commanding the thrust vector control actuators to the null position and putting the main propulsion system into a second stage configuration 0.8 second from sequence initialization, which ensures the thrust of each SRB is less than 100,000 pounds. Orbiter yaw

attitude is held for four seconds, and SRB thrust drops to less than 60,000 pounds. The SRBs separate from the external tank within 30 milliseconds of the ordnance firing command.

The forward attachment point consists of a ball on the SRB and socket on the external tank held together by one bolt. The bolt contains one NSD pressure cartridge at each end. The forward attachment point also carries the Range Safety System, or RSS, cross-strap wiring connecting each SRB RSS and the ET RSS with each other.

The aft attachment points consist of three separate struts, upper, diagonal, and lower. Each strut contains one bolt with an NSD pressure cartridge at each end. The upper strut also carries the umbilical interface between its SRB and the external tank and on to the orbiter.

There are four Booster Separation Motors, or BSMs on each end of each SRB. The BSMs separate the SRBs from the external tank. The solid rocket motors in each cluster of four are ignited by firing redundant NSD pressure cartridges into redundant confined detonating fuse manifolds. The separation commands issued from the orbiter by the SRB separation sequence initiate the redundant NSD pressure cartridge in each bolt and ignite the BSMs to achieve a clean separation

SRB Cameras

A new camera, the External Tank Observation Camera, was added on the first Return to Flight mission. Named because it was originally certified to give NASA engineers a closer look at the insulating foam on the external tank's inter-tank, the mid-section that joins the liquid hydrogen and liquid oxygen tanks. It consists of an off-the-shelf SuperCircuits PC 17 video camera and Sony mini-DV tape recorder positioned in each forward skirt section of the two boosters and offers a view of the Orbiter's nose, the tank's intertank and, at separation, the booster opposite the camera.

The camera's 2.5 mm lens provides a wide-angle, 90 degree horizontal field of view. Recording begins at launch and continues until after drogue parachute deployment, when the recorder switches over to a second identical camera looking out the top to record main parachute deployment. Audio is also recorded, which allows some correlation between the video and various flight events. The recorder battery pack is a 7.2 volt Lithium Ion battery which supports 90 minutes of operation, enough to support launch and then descent back to the Atlantic Ocean. The camera battery pack is a 24V Ni-Cad battery pack.

Video from the cameras is available for engineering review approximately 24 hours after the arrival of the boosters on the dock at Kennedy Space Center, usually about 52 hours after the launch.

Redesigned Booster Separation Motors

Redesigned Booster Separation Motors will fly the first time in both forward and aft locations on STS-125. As a result of vendor viability and manifest support issues, space shuttle BSMs are now being manufactured by ATK. The igniter has been redesigned and other changes include material upgrades driven by obsolescence issues and improvements to process and inspection techniques.

As before, eight BSMs are located on each booster, four on the forward section and four on the aft skirt. Once the SRBs have completed their flight, the eight BSMs are fired to jettison the boosters away from the orbiter and external tank, allowing the solid rocket motors to parachute to Earth and be reused.

SPACE SHUTTLE SUPER LIGHT WEIGHT TANK (SLWT)

The super lightweight external tank (SLWT) made its first shuttle flight June 2, 1998, on mission STS-91. The SLWT is 7,500 pounds lighter than the standard external tank. The lighter weight tank allows the shuttle to deliver International Space Station elements (such as the service module) into the proper orbit.

The SLWT is the same size as the previous design. But the liquid hydrogen tank and the liquid oxygen tank are made of aluminum lithium, a lighter, stronger material than the metal alloy used for the shuttle's current tank. The tank's structural design has also been improved, making it 30 percent stronger and 5 percent less dense.

The SLWT, like the standard tank, is manufactured at Michoud Assembly, near New Orleans, by Lockheed Martin.

The 154-foot-long external tank is the largest single component of the space shuttle. It stands taller than a 15-story building and has a diameter of about 27 feet. The external tank holds over 530,000 gallons of liquid hydrogen and liquid oxygen in two separate tanks. The hydrogen (fuel) and liquid oxygen (oxidizer) are used as propellants for the shuttle's three main engines.

EXTERNAL TANK

The 154-foot-long external tank is the largest single component of the space shuttle. It stands taller than a 15-story building and has a diameter of about 27 feet. The external tank holds more than 530,000 gallons of liquid hydrogen and liquid oxygen in two separate tanks, the forward liquid oxygen tank and the aft liquid hydrogen tank. An unpressurized intertank unites the two propellant tanks.

Liquid hydrogen (fuel) and liquid oxygen (oxidizer) are used as propellants for the shuttle's three main engines. The external tank weighs 58,500 pounds empty and 1,668,500 pounds when filled with propellants.

The external tank is the "backbone" of the shuttle during launch, providing structural support for attachment with the solid rocket boosters and orbiter. It is the only component of the shuttle that is not reused. Approximately 8.5 minutes after reaching orbit, with its propellant used, the tank is jettisoned and falls in a preplanned trajectory. Most of the tank disintegrates in the atmosphere, and the remainder falls into the ocean.

The external tank is manufactured at NASA's Michoud Assembly Facility in New Orleans by Lockheed Martin Space Systems.

Foam Facts

The external tank is covered with spray-on foam insulation that insulates the tank before and during launch. More than 90 percent of the tank's foam is applied using an automated system, leaving less than 10 percent to be applied manually.

There are two types of foam on the external tank, known as the Thermal Protection System, or TPS. One is low-density, closed-cell foam on the tank acreage and is known as Spray-On-Foam-Insulation, often referred to by its acronym, SOFI. Most of the tank is covered by either an automated or manually applied SOFI. Most areas around protuberances, such as brackets and structural elements, are applied by pouring foam ingredients into part-specific molds. The other is a denser composite

material made of silicone resins and cork and called ablator. An ablator is a material that dissipates heat by eroding. It is used on areas of the external tank subjected to extreme heat, such as the aft dome near the engine exhaust, and remaining protuberances, such as the cable trays. These areas are exposed to extreme aerodynamic heating.

Closed-cell foam used on the tank was developed to keep the propellants that fuel the shuttle's three main engines at optimum temperature. It keeps the shuttle's liquid hydrogen fuel at minus 423 degrees Fahrenheit and the liquid oxygen tank at near minus 297 degrees Fahrenheit, even as the tank sits under the hot Florida sun. At the same time, the foam prevents a buildup of ice on the outside of the tank.

The foam insulation must be durable enough to endure a 180-day stay at the launch pad, withstand temperatures up to 115 degrees Fahrenheit, humidity as high as 100 percent, and resist sand, salt, fog, rain, solar radiation and even fungus. Then, during launch, the foam must tolerate temperatures as high as 2,200 degrees Fahrenheit generated by aerodynamic friction and radiant heating from the 3,000 degrees Fahrenheit main engine plumes. Finally, when the external tank begins reentry into the Earth's atmosphere about 30 minutes after launch, the foam maintains the tank's structural temperatures and allows it to safely disintegrate over a remote ocean location.

Though the foam insulation on the majority of the tank is only 1-inch thick, it adds 4,823 pounds to the tank's weight. In the areas of the tank subjected to the highest heating, insulation is somewhat thicker, between 1.5 to 3 inches thick. Though the foam's density varies with the type, an average density is about 2.4 pounds per cubic foot.

Application of the foam, whether automated by computer or hand-sprayed, is designed to meet NASA's requirements for finish, thickness, roughness, density, strength and adhesion. As in most assembly production situations, the foam is applied in specially designed, environmentally controlled spray cells and applied in several phases, often over a period of several weeks. Before spraying, the foam's raw material and mechanical properties are tested to ensure they meet NASA specifications. Multiple visual inspections of all foam surfaces are performed after the spraying is complete.

Most of the foam is applied at NASA's Michoud Assembly Facility in New Orleans when the tank is manufactured, including most of the "closeout" areas, or final areas applied. These closeouts are done either by hand pouring or manual spraying. Additional closeouts are completed once the tank reaches Kennedy Space Center, Fla.

The super lightweight external tank, or SLWT, made its first shuttle flight in June 1998 on mission STS-91. The SLWT is 7,500 pounds lighter than previously flown tanks. The SLWT is the same size as the previous design, but the liquid hydrogen tank and the liquid oxygen tank are made of aluminum lithium, a lighter, stronger material than the metal alloy used previously.

Beginning with the first Return to Flight mission, STS-114 in June 2005, several improvements were made to improve safety and flight reliability.

Forward Bipod

The external tank's forward shuttle attach fitting, called the bipod, was redesigned to eliminate the large insulating foam ramps as a source of debris. Each external tank has two bipod fittings that connect the tank to the orbiter through the shuttle's two forward attachment struts. Four rod heaters were placed below each forward bipod, replacing the large insulated foam Protuberance Airload, or PAL, ramps.

Liquid Hydrogen Tank & Liquid Oxygen Intertank Flange Closeouts

The liquid hydrogen tank flange located at the bottom of the intertank and the liquid oxygen tank flange located at the top of the intertank provide joining mechanisms with the intertank. After each of these three component tanks, liquid oxygen, intertank and liquid hydrogen, are joined mechanically, the flanges at both ends are insulated with foam. An enhanced closeout, or finishing, procedure was added to improve foam application to the stringer, or intertank ribbing, and to the upper and lower area of both the liquid hydrogen and liquid oxygen intertank flanges.

Liquid Oxygen Feedline Bellows

The liquid oxygen feedline bellows were reshaped to include a "drip lip" that allows condensate moisture to run off and prevent freezing. A strip heater was added to the forward bellow to further reduce the potential of high density ice or frost formation. Joints on the liquid oxygen feedline assembly allow the feedline to move during installation and during liquid hydrogen tank fill. Because it must flex, it cannot be insulated with foam like the remainder of the tank.

Other tank improvements include:

Liquid Oxygen & Liquid Hydrogen Protuberance Airload (PAL) Ramps

External tank ET-119, which flew on the second Return to Flight mission, STS-121, in July 2006, was the first tank to fly without PAL ramps along portions of the liquid oxygen and liquid hydrogen tanks. These PAL ramps were extensively studied and determined to not be necessary for their original purpose, which was to protect cable trays from aeroelastic instability during ascent. Extensive tests were conducted to verify the shuttle could fly safely without these particular PAL ramps. Extensions were added to the ice frost ramps for the pressline and cable tray brackets, where these PAL ramps were removed to make the geometry of the ramps consistent with other locations on the tank and thereby provide consistent aerodynamic flow. Nine extensions were added, six on the liquid hydrogen tank and three on the liquid oxygen tank.

Engine Cutoff (ECO) Sensor Modification

Beginning with STS-122, ET-125, which launched on Feb. 7, 2008, the ECO sensor system feed through connector on the liquid hydrogen tank was modified by soldering the connector's pins and sockets to address false readings in the system. All subsequent tanks after ET-125 have the same modification.

Liquid Hydrogen Tank Ice Frost Ramps

ET-128, which flew on the STS-124 shuttle mission, May 31, 2008, was the first tank to fly with redesigned liquid hydrogen tank ice frost ramps. Design changes were incorporated at all 17 ice frost ramp locations on the liquid hydrogen tank, stations 1151 through 2057, to reduce foam loss. Although the redesigned

ramps appear identical to the previous design, several changes were made. PDL* and NCFI foam have been replaced with BX* manual spray foam in the ramp's base cutout to reduce debonding and cracking; Pressline and cable tray bracket feet corners have been rounded to reduce stresses; shear pin holes have been sealed to reduce leak paths; isolators were primed to promote adhesion; isolator corners were rounded to help reduce thermal protection system foam stresses; BX manual spray was applied in bracket pockets to reduce geometric voids.

*BX is a type of foam used on the tank's "loseout," or final finished areas; it is applied manually or hand-sprayed. PDL is an acronym for Product Development Laboratory, the first supplier of the foam during the early days of the external tank's development. PDL is applied by pouring foam ingredients into a mold. NCFI foam is used on the aft dome, or bottom, of the liquid hydrogen tank.

Liquid Oxygen Feedline Brackets

ET-128 also was the first tank to fly with redesigned liquid oxygen feedline brackets. Titanium brackets, much less thermally conductive than aluminum, replaced aluminum brackets at four locations: XT 1129, XT 1377, Xt 1624 and Xt 1871. This change minimizes ice formation in under-insulated areas, and reduces the amount of foam required to cover the brackets and the propensity for ice development. Zero-gap/slip plane Teflon material was added to the upper outboard monoball attachment to eliminate ice adhesion. Additional foam has been added to the liquid oxygen feedline to further minimize ice formation along the length of the feedline.

This page intentionally left blank

LAUNCH AND LANDING

LAUNCH

As with all previous space shuttle launches, Discovery has several options to abort its ascent if needed after engine failures or other systems problems. Shuttle launch abort philosophy is intended to facilitate safe recovery of the flight crew and intact recovery of the orbiter and its payload.

Abort modes include:

ABORT-TO-ORBIT

This mode is used if there's a partial loss of main engine thrust late enough to permit reaching a minimal 105 by 85 nautical mile orbit with the orbital maneuvering system engines. The engines boost the shuttle to a safe orbital altitude when it is impossible to reach the planned orbital altitude.

TRANSATLANTIC ABORT LANDING

The loss of one or more main engines midway through powered flight would force a landing at either Zaragoza, Spain; Moron, Spain; or Istres, France. For launch to proceed, weather conditions must be acceptable at one of these TAL sites.

RETURN-TO-LAUNCH-SITE

If one or more engines shuts down early and there's not enough energy to reach Zaragoza, the shuttle would pitch around toward Kennedy until within gliding distance of the Shuttle Landing Facility. For launch to proceed, weather conditions must be forecast to be acceptable for a possible RTLS landing at KSC about 20 minutes after liftoff.

ABORT ONCE AROUND

An AOA is selected if the vehicle cannot achieve a viable orbit or will not have enough propellant to perform a deorbit burn, but has enough energy to circle the Earth once and land about 90 minutes after liftoff.

LANDING

The primary landing site for Discovery on STS-119 is the Kennedy Space Center's Shuttle Landing Facility. Alternate landing sites that could be used if needed because of weather conditions or systems failures are at Edwards Air Force Base, Calif., and White Sands Space Harbor, N.M.

This page intentionally blank

ACRONYMS AND ABBREVIATIONS

A/G	Alignment Guide
A/L	Airlock
AAA	Avionics Air Assembly
ABC	Audio Bus Controller
ACBM	Active Common Berthing Mechanism
ACDU	Airlock Control and Display Unit
ACO	Assembly Checkout Officer
ACS	Atmosphere Control and Supply
ACU	Arm Control Unit
ADS	Audio Distribution System
AE	Approach Ellipsoid
AEP	Airlock Electronics Package
AI	Approach Initiation
AJIS	Alpha Joint Interface Structure
AM	Atmosphere Monitoring
AMOS	Air Force Maui Optical and Supercomputing Site
AOH	Assembly Operations Handbook
APAS	Androgynous Peripheral Attachment
APCU	Assembly Power Converter Unit
APE	Antenna Pointing Electronics
	Audio Pointing Equipment
APFR	Articulating Portable Foot Restraint
APM	Antenna Pointing Mechanism
APS	Automated Payload Switch
APV	Automated Procedure Viewer
AR	Atmosphere Revitalization
ARCU	American-to-Russian Converter Unit
ARS	Atmosphere Revitalization System
ASW	Application Software
ATA	Ammonia Tank Assembly
ATCS	Active Thermal Control System
ATU	Audio Terminal Unit
BAD	Broadcast Ancillary Data
BC	Bus Controller
BCDU	Battery Charge/Discharge Unit
	Berthing Mechanism Control and Display Unit
BEP	Berthing Mechanism Electronics Package
BGA	Beta Gimbal Assembly
BIC	Bus Interface Controller

BIT	Built-In Test
BM	Berthing Mechanism
BOS	BIC Operations Software
BSS	Basic Software
BSTS	Basic Standard Support Software
C&C	Command and Control
C&DH	Command and Data Handling
C&T	Communication and Tracking
C&W	Caution and Warning
C/L	Crew Lock
C/O	Checkout
CAM	Collision Avoidance Maneuver
CAPE	Canister for All Payload Ejections
CAS	Common Attach System
CB	Control Bus
CBCS	Centerline Berthing Camera System
CBM	Common Berthing Mechanism
CCA	Circuit Card Assembly
CCAA	Common Cabin Air Assembly
CCHA	Crew Communication Headset Assembly
CCP	Camera Control Panel
CCT	Communication Configuration Table
CCTV	Closed-Circuit Television
CDR	Space Shuttle Commander
CDRA	Carbon Dioxide Removal Assembly
CETA	Crew Equipment Translation Aid
CHeCS	Crew Health Care System
CHX	Cabin Heat Exchanger
CISC	Complicated Instruction Set Computer
CLA	Camera Light Assembly
CLPA	Camera Light Pan Tilt Assembly
CMG	Control Moment Gyro
COTS	Commercial Off the Shelf
CPA	Control Panel Assembly
CPB	Camera Power Box
CR	Change Request
CRT	Cathode-Ray Tube
CSA	Canadian Space Agency
CSA-CP	Compound Specific Analyzer
CVIU	Common Video Interface Unit

CVT	Current Value Table
CZ	Communication Zone
DB	Data Book
DC	Docking Compartment
DCSU	Direct Current Switching Unit
DDCU	DC-to-DC Converter Unit
DEM	Demodulator
DFL	Decommutation Format Load
DIU	Data Interface Unit
DMS	Data Management System
DMS-R	Data Management System-Russian
DPG	Differential Pressure Gauge
DPU	Baseband Data Processing Unit
DRTS	Japanese Data Relay Satellite
DYF	Display Frame
E/L	Equipment Lock
E-ORU	EVA Essential ORU
EATCS	External Active Thermal Control System
EBCS	External Berthing Camera System
ECC	Error Correction Code
ECLSS	Environmental Control and Life Support System
ECS	Environmental Control System
ECU	Electronic Control Unit
EDSU	External Data Storage Unit
EDU	EEU Driver Unit
EE	End Effector
EETCS	Early External Thermal Control System
EEU	Experiment Exchange Unit
EF	Exposed Facility
EFBM	Exposed Facility Berthing Mechanism
EFHX	Exposed Facility Heat Exchanger
EFU	Exposed Facility Unit
EGIL	Electrical, General Instrumentation, and Lighting
EIU	Ethernet Interface Unit
ELM-ES	Japanese Experiment Logistics Module – Exposed Section
ELM-PS	Japanese Experiment Logistics Module – Pressurized Section
ELPS	Emergency Lighting Power Supply
EMGF	Electric Mechanical Grapple Fixture
EMI	Electro-Magnetic Imaging
EMU	Extravehicular Mobility Unit
EP	Exposed Pallet

EPS	Electrical Power System
ES	Exposed Section
ESA	European Space Agency
ESC	JEF System Controller
ESW	Extended Support Software
ET	External Tank
ETCS	External Thermal Control System
ETI	Elapsed Time Indicator
ETRS	EVA Temporary Rail Stop
ETVCG	External Television Camera Group
EV	Extravehicular
EVA	Extravehicular Activity (Spacewalk)
EXP-D	Experiment-D
EXT	External
FA	Fluid Accumulator
FAS	Flight Application Software
FCT	Flight Control Team
FD	Flight Day
FDDI	Fiber Distributed Data Interface
FDIR	Fault Detection, Isolation, and Recovery
FDS	Fire Detection System
FE	Flight Engineer
FET-SW	Field Effect Transistor Switch
FGB	Functional Cargo Block
FOR	Frame of Reference
FPP	Fluid Pump Package
FR	Flight Rule
FRD	Flight Requirements Document
FRGF	Flight Releasable Grapple Fixture
FRM	Functional Redundancy Mode
FSE	Flight Support Equipment
FSEGF	Flight Support Equipment Grapple Fixture
FSW	Flight Software
GAS	Get-Away Special
GCA	Ground Control Assist
GLA	General Lighting Assemblies
	General Luminaire Assembly
GLONASS	Global Navigational Satellite System
GNC	Guidance, Navigation, and Control
GPC	General Purpose Computer
GPS	Global Positioning System

GPSR	Global Positioning System Receiver
GUI	Graphical User Interface
H&S	Health and Status
HCE	Heater Control Equipment
HCTL	Heater Controller
HEPA	High Efficiency Particulate Acquisition
HPA	High Power Amplifier
HPP	Hard Point Plates
HRDR	High Rate Data Recorder
HREL	Hold/Release Electronics
HRFM	High Rate Frame Multiplexer
HRM	Hold Release Mechanism
HRMS	High Rate Multiplexer and Switcher
HTV	H-II Transfer Vehicle
HTVCC	HTV Control Center
HTV Prox	HTV Proximity
HX	Heat Exchanger
I/F	Interface
IAA	Intravehicular Antenna Assembly
IAC	Internal Audio Controller
IBM	International Business Machines
ICB	Inner Capture Box
ICC	Integrated Cargo Carrier
ICS	Interorbit Communication System
ICS-EF	Interorbit Communication System – Exposed Facility
IDRD	Increment Definition and Requirements Document
IELK	Individual Equipment Liner Kit
IFHX	Interface Heat Exchanger
IMCS	Integrated Mission Control System
IMCU	Image Compressor Unit
IMV	Intermodule Ventilation
INCO	Instrumentation and Communication Officer
IP	International Partner
IP-PCDU	ICS-PM Power Control and Distribution Unit
IP-PDB	Payload Power Distribution Box
ISP	International Standard Payload
ISPR	International Standard Payload Rack
ISS	International Space Station
ISSSH	International Space Station Systems Handbook
ITCS	Internal Thermal Control System
ITS	Integrated Truss Segment

IVA	Intravehicular Activity
IVSU	Internal Video Switch Unit
JAL	JEM Air Lock
JAXA	Japan Aerospace Exploration Agency
JCP	JEM Control Processor
JEF	JEM Exposed Facility
JEM	Japanese Experiment Module
JEMAL	JEM Air lock
JEM-PM	JEM – Pressurized Module
JEMRMS	Japanese Experiment Module Remote Manipulator System
JEUS	Joint Expedited Undocking and Separation
JFCT	Japanese Flight Control Team
JLE	Japanese Experiment Logistics Module – Exposed Section
JLP	Japanese Experiment Logistics Module – Pressurized Section
JLP-EDU	JLP-EFU Driver Unit
JLP-EFU	JLP Exposed Facility Unit
JPM	Japanese Pressurized Module
JPM WS	JEM Pressurized Module Workstation
JSC	Johnson Space Center
JTVE	JEM Television Equipment
Kbps	Kilobit per second
KOS	Keep Out Sphere
LB	Local Bus
LCA	LAB Cradle Assembly
LCD	Liquid Crystal Display
LED	Light Emitting Diode
LEE	Latching End Effector
LMC	Lightweight MPESS Carrier
LSW	Light Switch
LTA	Launch-to-Activation
LTAB	Launch-to-Activation Box
LTL	Low Temperature Loop
MA	Main Arm
MAUI	Main Analysis of Upper-Atmospheric Injections
Mb	Megabit
Mbps	Megabit per second
MBS	Mobile Base System
MBSU	Main Bus Switching Unit
MCA	Major Constituent Analyzer

MCC	Mission Control Center
MCC-H	Mission Control Center – Houston
MCC-M	Mission Control Center – Moscow
MCDS	Multifunction Cathode-Ray Tube Display System
MCS	Mission Control System
MDA	MacDonald, Dettwiler and Associates Ltd.
MDM	Multiplexer/Demultiplexer
MDP	Management Data Processor
MELFI	Minus Eighty-Degree Laboratory Freezer for ISS
MGB	Middle Grapple Box
MIP	Mission Integration Plan
MISSE	Materials International Space Station Experiment
MKAM	Minimum Keep Alive Monitor
MLE	Middeck Locker Equivalent
MLI	Multi-Insulation
MLM	Multipurpose Laboratory Module
MMOD	Micrometeoroid/Orbital Debris
MOD	Modulator
MON	Television Monitor
MPC	Main Processing Controller
MPESS	Multipurpose Experiment Support Structure
MPEV	Manual Pressure Equalization Valve
MPL	Manipulator Retention Latch
MPLM	Multi-Purpose Logistics Module
MPM	Manipulator Positioning Mechanism
MPV	Manual Procedure Viewer
MSD	Mass Storage Device
MSFC	Marshall Space Flight Center
MSP	Maintenance Switch Panel
MSS	Mobile Servicing System
MT	Mobile Tracker
MTL	Moderate Temperature Loop
MUX	Data Multiplexer
NASA	National Aeronautics and Space Administration
NCS	Node Control Software
NET	No Earlier Than
NLT	No Less Than
n.mi.	nautical mile
NPRV	Negative Pressure Relief Valve
NSV	Network Service

NTA	Nitrogen Tank Assembly
NTSC	National Television Standard Committee
OBSS	Orbiter Boom Sensor System
OCA	Orbital Communications Adapter
OCAD	Operational Control Agreement Document
OCAS	Operator Commanded Automatic Sequence
ODF	Operations Data File
ODS	Orbiter Docking System
OI	Orbiter Interface
OIU	Orbiter Interface Unit
OMS	Orbital Maneuvering System
OODT	Onboard Operation Data Table
ORCA	Oxygen Recharge Compressor Assembly
ORU	Orbital Replacement Unit
OS	Operating System
OSA	Orbiter-based Station Avionics
OSE	Orbital Support Equipment
OTCM	ORU and Tool Changeout Mechanism
OTP	ORU and Tool Platform
P/L	Payload
PAL	Planning and Authorization Letter
PAM	Payload Attach Mechanism
PAO	Public Affairs Office
PBA	Portable Breathing Apparatus
PCA	Pressure Control Assembly
PCBM	Passive Common Berthing Mechanism
PCN	Page Change Notice
PCS	Portable Computer System
PCU	Power Control Unit
PDA	Payload Disconnect Assembly
PDB	Power Distribution Box
PDGF	Power and Data Grapple Fixture
PDH	Payload Data Handling unit
PDRS	Payload Deployment Retrieval System
PDU	Power Distribution Unit
PEC	Passive Experiment Container
PEHG	Payload Ethernet Hub Gateway
PFE	Portable Fire Extinguisher
PGSC	Payload General Support Computer
PIB	Power Interface Box
PIU	Payload Interface Unit

PLB	Payload Bay
PLBD	Payload Bay Door
PLC	Pressurized Logistics Carrier
PLT	Payload Laptop Terminal
	Space Shuttle Pilot
PM	Pressurized Module
PMA	Pressurized Mating Adapter
PMCU	Power Management Control Unit
POA	Payload ORU Accommodation
POR	Point of Resolution
PPRV	Positive Pressure Relief Valve
PRCS	Primary Reaction Control System
PREX	Procedure Executor
PRLA	Payload Retention Latch Assembly
PROX	Proximity Communications Center
psia	Pounds per Square Inch Absolute
PSP	Payload Signal Processor
PSRR	Pressurized Section Resupply Rack
PTCS	Passive Thermal Control System
PTR	Port Thermal Radiator
PTU	Pan/Tilt Unit
PVCU	Photovoltaic Controller Unit
PVM	Photovoltaic Module
PVR	Photovoltaic Radiator
PVTCS	Photovoltaic Thermal Control System
QD	Quick Disconnect
R&MA	Restraint and Mobility Aid
RACU	Russian-to-American Converter Unit
RAM	Read Access Memory
RBVM	Radiator Beam Valve Module
RCC	Range Control Center
RCT	Rack Configuration Table
RF	Radio Frequency
RGA	Rate Gyro Assembly
RHC	Rotational Hand Controller
RIGEX	Rigidizable Inflatable Get-Away Special Experiment
RIP	Remote Interface Panel
RLF	Robotic Language File
RLT	Robotic Laptop Terminal
RMS	Remote Manipulator System
ROEU	Remotely Operated Electrical Umbilical

ROM	Read Only Memory
R-ORU	Robotics Compatible Orbital Replacement Unit
ROS	Russian Orbital Segment
RPC	Remote Power Controller
RPCM	Remote Power Controller Module
RPDA	Remote Power Distribution Assembly
RPM	Roll Pitch Maneuver
RS	Russian Segment
RSP	Return Stowage Platform
RSR	Resupply Stowage Rack
RT	Remote Terminal
RTAS	Rocketdyne Truss Attachment System
RVFS	Rendezvous Flight Software
RWS	Robotics Workstation
SAFER	Simplified Aid for EVA Rescue
SAM	SFA Airlock Attachment Mechanism
SARJ	Solar Alpha Rotary Joint
SCU	Sync and Control Unit
SD	Smoke Detector
SDS	Sample Distribution System
SEDA	Space Environment Data Acquisition equipment
SEDA-AP	Space Environment Data Acquisition equipment – Attached Payload
SELS	SpaceOps Electronic Library System
SEU	Single Event Upset
SFA	Small Fine Arm
SFAE	SFA Electronics
SI	Smoke Indicator
SLM	Structural Latch Mechanism
SLP-D	Spacelab Pallet – D
SLP-D1	Spacelab Pallet – Deployable
SLP-D2	Spacelab Pallet – D2
SLT	Station Laptop Terminal
	System Laptop Terminal
SM	Service Module
SMDP	Service Module Debris Panel
SOC	System Operation Control
SODF	Space Operations Data File
SPA	Small Payload Attachment
SPB	Survival Power Distribution Box
SPDA	Secondary Power Distribution Assembly
SPDM	Special Purpose Dexterous Manipulator

SPEC	Specialist
SRAM	Static RAM
SRB	Solid Rocket Booster
SRMS	Shuttle Remote Manipulator System
SSAS	Segment-to-Segment Attach System
SSC	Station Support Computer
SSCB	Space Station Control Board
SSE	Small Fine Arm Storage Equipment
SSIPC	Space Station Integration and Promotion Center
SSME	Space Shuttle Main Engine
SSOR	Space-to-Space Orbiter Radio
SSP	Standard Switch Panel
SSPTS	Station-to-Shuttle Power Transfer System
SSRMS	Space Station Remote Manipulator System
STC	Small Fire Arm Transportation Container
STR	Starboard Thermal Radiator
STS	Space Transfer System
STVC	SFA Television Camera
SVS	Space Vision System
TA	Thruster Assist
TAC	TCS Assembly Controller
TAC-M	TCS Assembly Controller – M
TCA	Thermal Control System Assembly
TCB	Total Capture Box
TCCS	Trace Contaminant Control System
TCCV	Temperature Control and Check Valve
TCS	Thermal Control System
TCV	Temperature Control Valve
TDK	Transportation Device Kit
TDRS	Tracking and Data Relay Satellite
THA	Tool Holder Assembly
THC	Temperature and Humidity Control Translational Hand Controller
THCU	Temperature and Humidity Control Unit
TIU	Thermal Interface Unit
TKSC	Tsukuba Space Center (Japan)
TLM	Telemetry
TMA	Russian vehicle designation
TMR	Triple Modular Redundancy
TPL	Transfer Priority List
TRRJ	Thermal Radiator Rotary Joint

TUS	Trailing Umbilical System
TVC	Television Camera
UCCAS	Unpressurized Cargo Carrier Attach System
UCM	Umbilical Connect Mechanism
UCM-E	UCM – Exposed Section Half
UCM-P	UCM – Payload Half
UHF	Ultrahigh Frequency
UIL	User Interface Language
ULC	Unpressurized Logistics Carrier
UMA	Umbilical Mating Adapter
UOP	Utility Outlet Panel
UPC	Up Converter
USA	United Space Alliance
US LAB	United States Laboratory
USOS	United States On-Orbit Segment
VAJ	Vacuum Access Jumper
VBSP	Video Baseband Signal Processor
VCU	Video Control Unit
VDS	Video Distribution System
VLU	Video Light Unit
VRA	Vent Relief Assembly
VRCS	Vernier Reaction Control System
VRCV	Vent Relief Control Valve
VRIV	Vent Relief Isolation Valve
VSU	Video Switcher Unit
VSW	Video Switcher
WAICO	Waiving and Coiling
WCL	Water Cooling Loop
WETA	Wireless Video System External Transceiver Assembly
WIF	Work Interface
WRM	Water Recovery and Management
WRS	Water Recovery System
WS	Water Separator
	Work Site
	Work Station
WVA	Water Vent Assembly
ZSR	Zero-g Stowage Rack

MEDIA ASSISTANCE

NASA TELEVISION TRANSMISSION

NASA Television is carried on an MPEG-2 digital signal accessed via satellite AMC-6, at 72 degrees west longitude, transponder 17C, 4040 MHz, vertical polarization. For those in Alaska or Hawaii, NASA Television will be seen on AMC-7, at 137 degrees west longitude, transponder 18C, at 4060 MHz, horizontal polarization. In both instances, a Digital Video Broadcast, or DVB-compliant Integrated Receiver Decoder, or IRD, with modulation of QPSK/DBV, data rate of 36.86 and FEC 3/4 will be needed for reception. The NASA Television schedule and links to streaming video are available at:

http://www.nasa.gov/ntv

NASA TV's digital conversion will require members of the broadcast media to upgrade with an 'addressable' Integrated Receiver De-coder, or IRD, to participate in live news events and interviews, media briefings and receive NASA's Video File news feeds on a dedicated Media Services channel. NASA mission coverage will air on a digital NASA Public Services "Free to Air" channel, for which only a basic IRD will be needed.

Television Schedule

A schedule of key in-orbit events and media briefings during the mission will be detailed in a NASA TV schedule posted at the link above. The schedule will be updated as necessary and will also be available at:

http://www.nasa.gov/multimedia/nasatv/mission_schedule.html

Status Reports

Status reports on launch countdown and mission progress, in-orbit activities and landing operations will be posted at:

http://www.nasa.gov/shuttle

This site also contains information on the crew and will be updated regularly with photos and video clips throughout the flight.

More Internet Information

Information on the ISS is available at:

http://www.nasa.gov/station

Information on safety enhancements made since the Columbia accident is available at:

http://www.nasa.gov/returntoflight/system/index.html

Information on other current NASA activities is available at:

http://www.nasa.gov

Resources for educators can be found at the following address:

http://education.nasa.gov

This page intentionally left blank.

PUBLIC AFFAIRS CONTACTS

NASA HEADQUARTERS WASHINGTON, DC

Space Operations Mission Directorate

Michael Braukus
International Partners
202-358-1979
michael.j.braukus@nasa.gov

Katherine Trinidad
Shuttle, Space Station Policy
202-358-1100
katherine.trinidad@nasa.gov

John Yembrick
Shuttle, Space Station Policy
202-358-1100
john.yembrick-1@nasa.gov

Mike Curie
Shuttle, Space Station Policy
202-358-1100
michael.curie@nasa.gov

Science Mission Directorate

Grey Hautaluoma
Research in Space
202-358-0668
grey.hautaluoma-1@nasa.gov

Ashley Edwards
Research in Space
202-358-1756
ashley.edwards-1@nasa.gov

JOHNSON SPACE CENTER HOUSTON, TEXAS

James Hartsfield
News Chief
281-483-5111
james.a.hartsfield@nasa.gov

Kyle Herring
Public Affairs Specialist
Space Shuttle Program Office
281-483-5111
kyle.j.herring@nasa.gov

Rob Navias
Program and Mission Operations Lead
281-483-5111
rob.navias-1@nasa.gov

Kelly Humphries
Public Affairs Specialist
International Space Station and Mission Operations Directorate
281-483-5111
kelly.o.humphries@nasa.gov

Nicole Cloutier-Lemasters
Public Affairs Specialist
Astronauts
281-483-5111
nicole.cloutier-1@nasa.gov

KENNEDY SPACE CENTER
CAPE CANAVERAL, FLORIDA

Allard Beutel
News Chief
321-867-2468
allard.beutel@nasa.gov

Candrea Thomas
Public Affairs Specialist
Space Shuttle
321-861-2468
candrea.k.thomas@nasa.gov

Tracy Young
Public Affairs Specialist
International Space Station
321-867-2468
tracy.g.young@nasa.gov

MARSHALL SPACE FLIGHT CENTER
HUNTSVILLE, ALABAMA

Dom Amatore
Public Affairs Manager
256-544-0034
dominic.a.amatore@nasa.gov

June Malone
Public Affairs Specialist
News Chief/Media Manager
256-544-0034
june.e.malone@nasa.gov

Steve Roy
Public Affairs Specialist
Space Shuttle Propulsion
256-544-0034
steven.e.roy@nasa.gov

STENNIS SPACE CENTER
BAY ST. LOUIS, MISSISSIPPI

Paul Foerman
News Chief
228-688-1880
paul.foerman-1@nasa.gov

Linda Theobald
Public Affairs Officer
228-688-3249
linda.l.theobald@nasa.gov

AMES RESEARCH CENTER
MOFFETT FIELD, CALIFORNIA

Mike Mewhinney
News Chief
650-604-3937
michael.mewhinney@nasa.gov

Jonas Dino
Public Affairs Specialist
650-604-5612
jonas.dino@nasa.gov

DRYDEN FLIGHT RESEARCH CENTER
EDWARDS, CALIFORNIA

Fred Johnsen
Director, Public Affairs
661-276-2998
frederick.a.johnsen@nasa.gov

Alan Brown
News Chief
661-276-2665
alan.brown@nasa.gov

Leslie Williams
Public Affairs Specialist
661-276-3893
leslie.a.williams@nasa.gov

GLENN RESEARCH CENTER CLEVELAND, OHIO

Lori Rachul
News Chief
216-433-8806
lori.j.rachul@nasa.gov

Jeannette P. Owens
Public Affairs Specialist
216-433-2990
jeannette.p.owens@nasa.gov

LANGLEY RESEARCH CENTER HAMPTON, VIRGINIA

Marny Skora
Head, News Media Office
757-864-3315
marny.skora@nasa.gov

Chris Rink
Public Affairs Officer
757-864-6786
christopher.p.rink@nasa.gov

Kathy Barnstorff
Public Affairs Officer
757-864-9886
katherine.a.barnstorff@nasa.gov

UNITED SPACE ALLIANCE

Jessica Pieczonka
Houston Operations
281-212-6252
832-205-0480
jessica.b.pieczonka@usa-spaceops.com

David Waters
Florida Operations
321-861-3805
david.waters@usa-spaceops.com

BOEING

Ed Memi
Media Relations
Boeing Space Exploration
281-226-4029
edmund.g.memi@boeing.com

JAPAN AEROSPACE EXPLORATION AGENCY (JAXA)

Naoko Matsuo
JAXA Public Affairs Representative
Houston
281-483-2251
matsuo.naoko@jaxa.jp

JAXA Public Affairs Office
Tokyo, Japan
011-81-3-6266-6414, 6415, 6416, 6417
proffice@jaxa.jp

CANADIAN SPACE AGENCY (CSA)

Jean-Pierre Arseneault
Manager, Media Relations & Information Services
514-824-0560 (cell)
jean-pierre.arseneault@space.gc.ca

Media Relations Office
Canadian Space Agency
450-926-4370

EUROPEAN SPACE AGENCY (ESA)

Clare Mattok
Communication Manager
Paris, France
011-33-1-5369-7412
clare.mattok@esa.int

This page intentionally blank