National Aeronautics and Space Administration

PRESS KIT/FEBRUARY 2009

Orbiting Carbon Observatory Launch

www.nasa.gov

Media Contacts

Steve Cole Headquarters Washington	Policy/Program Management	202-358-0918 stephen.e.cole@nasa.gov 202-657-2194 (cell)
Alan Buis Jet Propulsion Laboratory Pasadena, Calif.	Orbiting Carbon Observatory Mission	818-354-0474 alan.buis@jpl.nasa.gov
Barron Beneski Orbital Sciences Corp. Dulles, Va.	Launch Vehicle/ Spacecraft	703-406-5528 beneski.barron@orbital.com
George Diller Kennedy Space Center, Fla.	Launch Operations	321-867-2468 george.h.diller@nasa.gov

Contents

Media Services Information 5
Quick Facts 6
Mission Overview 7
Why Study Carbon Dioxide? 16
Science Goals and Objectives 29
Spacecraft 30
Instrument 35
NASA's Carbon Cycle Science Program 39
Program/Project Management 43

Media Services Information

NASA Television

In the continental United States, NASA Television's Public, Education and Media channels are carried by MPEG-2 digital C-band signal on AMC-6, at 72 degrees west longitude, Transponder 17C, 4040 MHz, vertical polarization. They're available in Alaska and Hawaii on an MPEG-2 digital C-band signal accessed via satellite AMC-7, transponder 18C, 137 degrees west longitude, 4060 MHz, vertical polarization. A Digital Video Broadcast-compliant Integrated Receiver Decoder with modulation of QPSK/DBV, data rate of 36.86 and FEC 3/4 is required for reception. NASA TV Multichannel Broadcast includes: Public Services Channel (Channel 101); the Education Channel (Channel 102) and the Media Services Channel (Channel 103). Analog NASA TV is no longer available.

For digital downlink information for each NASA TV channel, schedule information for mission activities and access to NASA TV's public channel on the Web, visit **http://www.nasa.gov/ntv** .

Audio

Audio of the pre-launch news conference and launch coverage will be available on "V-circuits" that may be reached by dialing 321-867-1220, -1240, -1260 or -7135.

Briefings

A mission and science overview news conference will be held at NASA Headquarters approximately one month before launch. The news conference will be broadcast live on NASA Television. Pre-launch readiness and mission science briefings will be held at 1 p.m. and 2 p.m. PST (4 p.m. and 5 p.m. EST), respectively, on launch minus two days in the NASA Resident Office, Building 840, Vandenberg Air Force Base, Calif. These briefings will also be carried live on NASA Television. Media advisories will be issued in advance, outlining details of these broadcasts.

Launch Media Credentials

News media interested in attending the launch should contact 2nd Lt. Raymond Geoffroy, U.S. Air Force 30th Space Wing Public Affairs Office, Vandenberg Air Force Base, Calif., phone 805-606-3595, fax 805-606-8303, email raymond.geoffroy@vandenberg.af.mil . Foreign nationals must submit accreditation requests no later than one month before launch. Please include full legal name, news organization, address, nationality/citizenship, passport number and date of birth. A legal photo identification will be required upon arrival at Vandenberg to cover the launch.

News Center/Status Reports

The Orbiting Carbon Observatory News Center at the NASA Vandenberg Resident Office will be staffed beginning launch minus four days and may be reached at 805-605-3051. Recorded status reports will be available beginning launch minus three days at 805-734-2693.

Internet Information

More information on the mission, including an electronic copy of this press kit, news releases, fact sheets, status reports and images, can be found at **http://www.nasa.gov/oco** .

Quick Facts

Spacecraft

Dimensions: 2.12 meters (6.96 feet) long by 0.94 meters (3.08 feet) wide (stowed)
Weight (spacecraft and science instrument): 441 kilograms (972 pounds)
Power: 813 watts
Primary Science Instrument: Three-channel grating spectrometer
Instrument Dimensions: 1.6 meters by 0.4 meters by 0.6 meters (5.3 feet by 1.3 feet by 2 feet)
Instrument Weight: 135 kilograms (298 pounds)

Mission

Launch: No earlier than February 23, 2009, at 1:53 a.m. PST (4:53 a.m. EST) from
Launch Complex 576-E, Vandenberg Air Force Base, Calif.
Launch Vehicle: Orbital Sciences Corp. Taurus XL 3110
Launch Window: 5-10 minutes daily
Primary Mission: Two years
Orbit Path: Near-polar, sun-synchronous, 705 kilometers (438 miles), orbiting Earth once every 99 minutes and repeating the same ground track every 16 days
Orbital Inclination: 98.2 degrees
NASA Investment : $273.4 million (design, development, launch and operations)

Mission Overview

The Orbiting Carbon Observatory is NASA's first spacecraft dedicated to making space-based observations of atmospheric carbon dioxide, the principal human-produced driver of climate change. This new Earth science mission will have the accuracy, resolution and coverage needed to provide the first complete picture of the geographic distribution and seasonal variations of both human and natural sources of carbon dioxide emissions and the places where they are being absorbed (sinks), at regional scales, mapping the globe once every 16 days.

Currently, about 380 out of every million molecules in the atmosphere is carbon dioxide. Modeling studies show that the ability to estimate atmospheric carbon dioxide concentrations to an accuracy of one to two parts per million (0.3 to 0.5 percent), on regional scales at monthly intervals, would dramatically improve our understanding of the natural processes and human activities that regulate the abundance and distribution of this important greenhouse gas. The observatory will use unique implementations of mature technologies and advanced analytical techniques to do just that.

Scientists will use data from the mission to make more reliable forecasts of future atmospheric carbon dioxide concentrations and how they may affect Earth's climate. This exploratory science mission is designed to last at least two years, long enough to validate a novel, space-based measurement approach and analysis concept that could be applied to future long-term, space-based carbon dioxide monitoring missions.

The observatory will fly at an altitude of 705 kilometers (438 miles), completing one near-polar Earth orbit every 98.8 minutes. The nearly north-south orbit track repeats every 16 days. It will fly in a loose formation with the other Earth-observing satellites of NASA's Afternoon Constellation, or "A-Train," each of which monitors various aspects of the same region of the atmosphere at about the same time. Flying as part of the A-Train will complement the mission's science return and facilitate calibration and validation of the observatory. Its observations will be correlated with those of instruments aboard NASA's Aqua, CloudSat, Cloud-Aerosol Lidar and Infrared Pathfinder Satellite Observation (Calipso) and Aura spacecraft. Among these measurements are the temperature, humidity, and carbon dioxide data from the Atmospheric Infrared Sounder instrument on Aqua; the cloud, aerosol and ocean color observations, as well as carbon source and sink measurements from the Moderate Resolution Imaging Spectroradiometer instrument on Aqua; the cloud and aerosol observations by CloudSat and Calipso, respectively, and the methane and carbon monoxide retrievals from the Tropospheric Emission Spectrometer on NASA's Aura satellite.

The Orbiting Carbon Observatory was selected in July of 2002 as part of NASA's Earth System Science Pathfinder program. Overseen by NASA's Science Mission Directorate, the Earth System Science Pathfinder program sponsors missions designed to address unique, specific, highly focused requirements in Earth science research. The program is characterized by relatively low to moderate cost, small- to medium-sized spaceflight missions capable of being built, tested and launched quickly. They support a variety of scientific objectives related to Earth science, including studies of the atmosphere, ocean, land surface, polar ice regions and solid Earth. The program encompasses development and operation of remote-sensing instruments and the conduct of investigations using data from these instruments. The Earth System Science Pathfinder program office, based at NASA's Langley Research Center, Hampton, Va., is responsible for managing, directing and implementing these science investigations.

Launch Site and Vehicle

The Orbiting Carbon Observatory will be launched from Space Launch Complex 576-E at Vandenberg Air Force Base, Calif., on a Taurus XL 3110 launch vehicle.

Manufactured by Orbital Sciences Corporation, Dulles, Va., and developed under the sponsorship of the Defense Advanced Research Projects Agency, the Taurus XL 3110 rocket offers an affordable, reliable means of launching small satellites into low-Earth orbit. Since its debut flight in 1994, Taurus has conducted six successful missions, launching 12 satellites for commercial, civilian, military and international customers. It has an 86-percent success rate.

Taurus is a ground-based variant of Orbital's air-launched Pegasus rocket. The four-stage, inertially guided, all solid-propellant vehicle can deploy satellites weighing up to 1,350 kilograms (3,000 pounds) into low-Earth orbit.

Taurus is designed for easy transportability and rapid set-up and launch. To simplify vehicle integration and test, Taurus' upper stages are horizontally integrated, and its payloads can be encapsulated within the fairing before the fairing is installed on the rocket. The upper stages and the encapsulated cargo are delivered to the launch site, where they are mated. The whole assembly is then stacked on the rocket's first stage, using a mobile crane.

The first stage of the Taurus XL 3110 (known as Stage 0) uses a Castor 120 solid rocket motor manufactured by Alliant Techsystems, Magna, Utah. The motor provides a maximum of 1,904 kilonewtons (428,120 pounds) of thrust (vacuum) and uses hydroxyl-terminated polybutadiene as a propellant.

The Taurus XL 3110 upper stages (known as Stages 1, 2 and 3) are the Alliant Techsystems Orion 50SXLG, Orion 50XL and Orion 38 solid rocket motors, respectively. All use hydroxyl-terminated polybutadiene as a propellant. The Stage 1 Orion 50SXLG provides a maximum of 704 kilonewtons (157,729 pounds) of thrust (vacuum). The Stage 2 Orion 50XL provides a maximum of 196 kilonewtons (44,171 pounds) of thrust (vacuum). The Stage 3 Orion 38 provides a maximum of 36 kilonewtons (8,062 pounds) of thrust (vacuum).

The spacecraft will be contained inside the vehicle's payload fairing, which has a diameter of 160 centimeters (63 inches).

At launch, the Taurus XL 3110 will stand approximately 28.3 meters (93 feet) tall atop a 7.3-meter (24-foot) tall launch stand, and weigh approximately 74,000 kilograms (81.6 tons).

Launch Timing

The Orbiting Carbon Observatory will be launched at a specific time based on the science requirements of the mission. Unlike spacecraft sent to other planets, comets or asteroids, the launches of Earth-orbiting satellites do not need to be timed based on the alignment of the planets. Earth-orbiting satellites do, however, need to be launched during particular windows within any given 24-hour day in order to get into the proper orbit around Earth. The Orbiting Carbon Observatory will assume what is called a "sun-synchronous" orbit, flying within eight degrees of Earth's north and south poles. Because it needs to adjust to the even more precise orbit of the "A-Train" constellation of Earth observing satellites that it will join, the launch vehicle must be launched during a specific daily launch window.

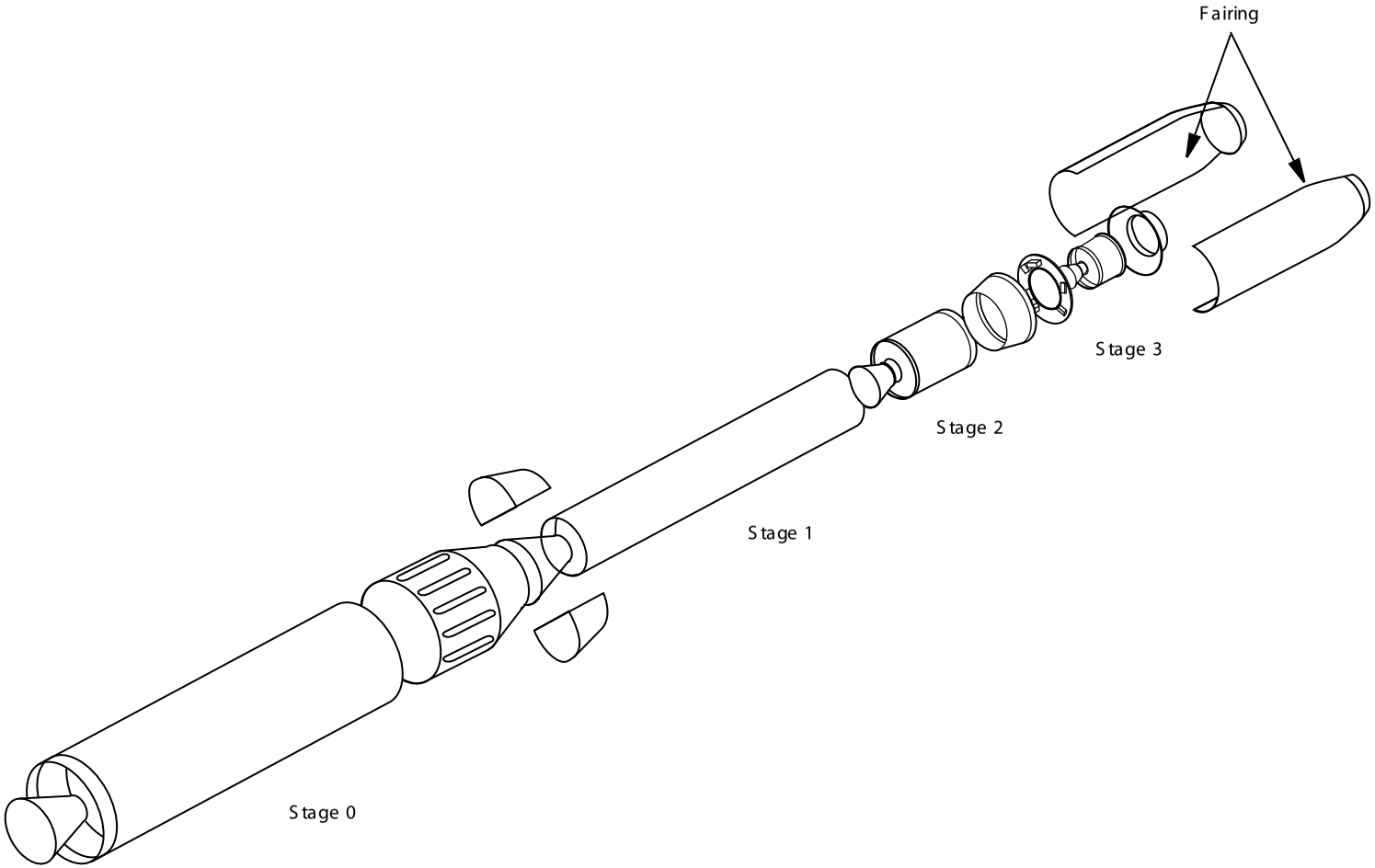

Taurus XL 3110 launch vehicle

The launch date is based only on the readiness of the satellite, the Taurus XL 3110 launch vehicle and the launch range at Vandenberg Air Force Base. Launch is currently scheduled for 1:53 a.m. PST (4:53 a.m. EST) no earlier than February 23, 2009.

Launch Sequence

When the Taurus XL 3110 launches, its Stage 0 engine will ignite at the moment of liftoff and the rocket will rise vertically from the launch pad. Several seconds later, the Taurus XL 3110 will tilt towards the southeast, crossing the California coastline and heading upward and out over the open Pacific Ocean. Twenty-five seconds after liftoff, the launch vehicle will reach the speed of sound, and 16 seconds later it will reach its point of maximum aerodynamic stress. Eighty-four seconds after liftoff, Stage 0 will burn out and separate from the launch vehicle, and Stage 1 will ignite.

About two minutes and 42 seconds into the flight, Stage 1 will burn out and separate, following a brief post-burn coast. About seven seconds later, the Stage 2 motor will ignite, and six seconds after that, the launch vehicle's nose cone, or "fairing," will separate in two halves, like a clamshell, and fall away.

About four minutes and four seconds into the flight, Stage 2 will burn out and will separate one minute and three seconds later during a launch vehicle coast period. The length of the coast period is determined in real time by the Taurus guidance system, which optimizes the spacecraft's injection orbit target based on the vehicle's actual performance during ascent.

Upon reaching maximum altitude, 10 minutes and 10 seconds into the flight, Stage 3 will ignite, burning for one minute and 14 seconds to reach the planned insertion orbit. The vehicle will then coast for approximately two minutes to allow its residual motor thrust to subside and to change direction to the required attitude for spacecraft deployment.

Separation of the Orbiting Carbon Observatory satellite occurs approximately 13 minutes and 19 seconds after liftoff, with the vehicle in a 640-kilometer (398-mile) injection orbit, from which the spacecraft will subsequently adjust its orbit and reach its final operational orbit of 705 kilometers (438 miles). The Taurus launch vehicle sends a signal to fire bolt cutters that release clamp band/springs on the payload adapter, separating the spacecraft at a rate of about 0.6 meters (2 feet) per second.

Approximately 10 seconds after the separation begins, the Taurus rocket will perform a collision and contamination avoidance maneuver. This maneuver ensures that there is no possibility of the spacecraft colliding with Taurus.

The observatory will then point itself toward the sun and perform a number of activation procedures, including turning on its S-band transmitter, which is used to uplink commands to the spacecraft.

At approximately 14 minutes after launch, NASA's Tracking and Data Relay Satellite System should acquire a signal from the spacecraft. The spacecraft's twin solar arrays will begin to be deployed at launch plus 16 minutes. The observatory's science instrument will be powered on a little more than six hours into the mission.

Checkout of the spacecraft will begin on launch day and conclude at launch plus 10 days. Eleven days after launch, the spacecraft will begin a 20-day series of maneuvers that will place it in its operational orbit in NASA's A-Train constellation. Checkout of the observatory's science instrument will begin 31 days into the mission and conclude at launch plus 37 days. Science operations will begin at launch plus 38 days.

Constellation Flying

Constellation flying is the coordinated operations of two or more spacecraft that are significantly separated in time, by seconds to minutes, in this case the six satellites of NASA's A-Train constellation. During each orbit, all six of the A-Train satellites will cross the equator within a few minutes of one another at around 1:30 p.m. in the time zone they are flying over; OCO will cross the equator at 1:30 p.m. local time, an ideal time of day for making spectroscopic observations of carbon dioxide using reflected sunlight.

As the A-Train satellites circle Earth, about 14 minutes pass between the time the first satellite (the Orbiting Carbon Observatory) and the last (Aura) pass over any given spot. Overall, the string of satellites stretches across 6,100 kilometers (3,800 miles) in space, with each traveling about 7.5 kilometers per second (4.7 miles per second). The Orbiting Carbon Observatory precedes Aqua, the second satellite in the A-Train, by an average of about 200 seconds, flying approximately 1,500 kilometers (940 miles) in front of it. This separation spacing is much greater than that between Aqua, CloudSat, and Calipso, allowing for looser control and higher margins of safety while still supporting coordinated measurements. Maneuvers to maintain this circulation orbit will be carried out approximately every 10 weeks.

After launch, maneuvers within the first 30 days of the mission will bring the Orbiting Carbon Observatory into formation with Aqua. The observatory's orbit will be adjusted and monitored to hold it at a fixed distance from Aqua. The satellite will be controlled so that its sensors, along with those of Aqua, view the same ground track whenever the observatory is observing straight down at the ground below.

Satellite Operations

The observatory's ground segment includes all facilities required to operate the satellite; acquire its telemetry; and process, distribute and archive data products. The Orbital Sciences Mission Operations Center in Dulles, Va., is responsible for all ground operations that track and control the spacecraft, under the leadership of JPL. Science data will be transmitted to NASA ground network stations in Alaska and Virginia.

Science Data Processing

Once received on the ground, the raw data from the observatory will be processed by the ground data system facility at JPL, which houses the hardware and software that convert science data telemetry to higher level data products for distribution to the user community. The facility will provide archival services for the Orbiting Carbon Observatory mission data and products.

Data Products

The Orbiting Carbon Observatory mission will produce four primary data products for the user community that will provide comprehensive mission results and material for further research and investigation:

- ❑ Level 1B — full orbits or fractions of orbits of calibrated and geographically located spectral radiances of the molecular oxygen A-band and 1.61- and 2.06-micron carbon dioxide bands. This product contains a unique record of every sounding the instrument makes while viewing Earth during a single spacecraft orbit--approximately 37,000 soundings. Each sounding consists of three

co-located (occurring side-by-side) spectra from the individual spectrometer channels.

❑ Level 2—full orbits or fractions of orbits of geographically located atmospheric carbon dioxide concentrations. This product provides several atmospheric and geophysical measures made during the same spacecraft orbit, and typically includes at least 3,700 retrievals from completely cloud-free scenes consisting of vertical atmospheric profiles of temperature, water vapor, aerosol content, albedo, surface pressure and the concentration of atmospheric carbon dioxide in cloud-free scenes.

❑ Level 3—regional-scale concentrations of atmospheric carbon dioxide. This product will be generated monthly by members of the Orbiting Carbon Observatory science team at their home institutions. The Level 3 product will map the concentration of atmospheric carbon dioxide with an accuracy of one part per million out of 384 parts per million (0.3 percent) over regions of Earth's surface measuring 1,000 kilometers by 1,000 kilometers (386 square miles). Each granule of the Level 3 product will represent data from one 16-day orbit repeat cycle.

❑ Level 4—global carbon dioxide sources and sinks. This product will also be generated monthly by members of the Orbiting Carbon Observatory science team at their home institutions by combining Orbiting Carbon Observatory Level 3 data with complex models of atmospheric transport and atmosphere/surface exchange. The Level 4 product will map the distribution of carbon dioxide sources and sinks over Earth's surface.

The JPL Data Center will archive and distribute the mission's data products. Scientists expect to begin archiving calibrated spectral radiances about six months after the end of the spacecraft's in-orbit checkout. An exploratory atmospheric carbon dioxide concentration product is expected to be available within nine months after completing in-orbit checkout.

Calibration

A robust calibration program will ensure that the data received from the observatory instrument are converted into meaningful and accurate measurements. The observatory team will perform three types of calibration on the observatory's science data stream:

❑ Radiometric calibrations, which convert raw data numbers into spectral radiances

❑ Spectral calibrations, which assign an appropriate wavelength to each of the samples that make up each instrument channel's spectrum

❑ Geometric calibrations, which provide the parameters required to accurately locate the footprint of each measurement on Earth's surface

Validation

The Orbiting Carbon Observatory team will verify the observatory's observations of atmospheric carbon dioxide concentrations acquired from space. The data will be validated against directly measured data and remote sensing data from a ground-based network and airborne measurements calibrated to the same standard to ensure that its measurements meet the mission's precision requirements of 0.3 percent (one part per million) on regional scales at semi-monthly intervals.

To tie the satellite measurements to those from the ground-based carbon dioxide monitoring network,

the observatory will routinely target ground-based Fourier Transform Infrared Spectrometers incorporated into the Total Column Carbon Observing Network. The spectrometers in this network acquire precise and accurate remote sensing measurements of atmospheric carbon dioxide concentrations by observing direct sunlight in the same carbon dioxide and oxygen absorption bands as those used by the Orbiting Carbon Observatory. Very precise laboratory instruments will provide detailed characteristics of spectrographic lines of molecular oxygen and carbon dioxide to the level of precision required to properly interpret the observatory's atmospheric spectral measurements. The Total Column Carbon Observing Network carbon dioxide measurements from several of the sites have been validated against the World Meteorological Organization's standard for in situ (directly measured) carbon dioxide. This was done by comparing the network's measurements of the column-averaged carbon dioxide concentration with simultaneous measurements of the carbon dioxide profiles above these sites using aircraft that carry the same types of instruments and sampling techniques used at the other World Meteorological Organization ground-based sites. Additional aircraft flights are planned during the operational phase of the Orbiting Carbon Observatory mission.

In addition, the Orbiting Carbon Observatory project is collaborating with the National Oceanic and Atmospheric Administration's Earth Science Research Laboratory and its partners, who routinely collect carbon dioxide observations obtained from containers used to collect air samples, tall towers and aircraft. Research scientists will employ all these information sources to calibrate, verify and improve the accuracy of the observatory's space-borne measurements of atmospheric carbon dioxide concentration.

Science Team

An international science team will address the mission's science objectives and goals. Among its responsibilities, the science team will advise the project on aspects of the mission that influence the scientific and operational usefulness of the data. The team has formulated a mission science plan and will oversee mission operations activities. Team members will collect datasets acquired by instruments on the ground, mounted on tall towers and flown in aircraft, which can be used to validate Orbiting Carbon Observatory data and develop a strategy to calibrate instrument measurements in flight. They will establish procedures to ensure the quality of Orbiting Carbon Observatory data products. The team will regularly review operations plans and propose modifications based on the content and quality of data and to take advantage of special observing opportunities such as forest fires or volcanic eruptions.

A list of Orbiting Carbon Observatory Science Team members is provided in the Orbiting Carbon Observatory Science Writers' Guide.

Mission Phases

The OCO mission is divided into three primary phases:

- ❑ The **Launch/Injection Orbit phase** covers the time period from spacecraft delivery to the Western Launch and Test Range at Vandenberg Air Force Base, Calif., until the instrument has been checked out in orbit and is ready to begin normal operations. It is divided into four sub phases: launch, spacecraft checkout, orbit adjustment and instrument checkout.

    - The *launch sub phase* began on Nov. 11, 2008, with the arrival of the spacecraft at Vandenberg and will end when the spacecraft separates from the launch vehicle and is placed into its injection orbit. Activities during this phase focus on prelaunch preparations of the spacecraft,

such as final checkout and test, spacecraft fueling and mating to the launch vehicle. In addition, final tests and checkout of the mission operations software are performed to assure their readiness for on-orbit activities and maneuvers. The time from liftoff to spacecraft separation is less than 15 minutes.

- The *spacecraft checkout sub phase* will immediately follow the launch sub phase, beginning when the observatory physically separates from the Taurus third stage. It focuses on the transition of the spacecraft to communications with the ground, enabling command and control. This involves both the Tracking Data Relay Satellite System and S-band links with ground stations. Early in this phase, the solar arrays are deployed and the spacecraft's attitude is stabilized in an orientation with its arrays pointed at the sun. Once proper power levels are sustainable, the spacecraft communicates with Earth tracking stations to acquire new commands and verify the spacecraft's readiness for further actions. This includes the initial on-orbit checkout and calibration of spacecraft systems to ensure they are functional and that the spacecraft is able to properly orient itself and the instrument. The science instrument is not yet turned on. This sub phase takes a minimum of several hours of intensive operations and can take as long as several days. When it is completed, the spacecraft will be in a stable attitude with the instrument and antenna pointed straight down toward the ground. The craft will be routinely communicating with ground tracking stations as it moves along the injection orbit and passes over ground telemetry stations.

- The *orbit adjustment sub phase* is highlighted by a series of propulsive maneuvers to correct for errors in the launch and position the spacecraft into the A-Train constellation. The observatory will then be boosted by its own propulsion system into the operations orbit. This sub phase is complete when the spacecraft is thoroughly checked out, is operating normally and is properly inserted in the A-Train.

- Once in its operations orbit, the observatory will turn on, cool down, and begin calibrating and checking out its instrument. Once the instrument has been turned on and has achieved stable operations, it will be used in a measurement mode to determine its performance and any biases relative to its expected performance. The spacecraft is now ready to begin its routine operations.

❑ The **Operations phase** begins with an initial science campaign for 90 days. Throughout this phase, the mission will continuously collect science data and transmit it to ground stations.

- The observatory will collect atmospheric carbon dioxide observations in nadir, glint, and target modes, and conduct regularly scheduled instrument calibrations.

- Data from these observations will be transmitted to the ground data system, processed and released to scientists for analysis and validation.

- Once validated, higher-level products will be released, including maps of the global carbon dioxide distribution and the locations of carbon dioxide sources and sinks.

- The spacecraft will return science data to the ground station on one pass per day. The time required for daily data return is 6.75 minutes; an individual data return pass can be five to 12 minutes long

- The Orbiting Carbon Observatory mission will use both the Ground Network and Space Network. The Space Network consists of the Tracking and Data Relay Satellite System. The Ground Network's primary site is located near Fairbanks, Alaska, with the 11-meter (36-foot) Poker Flat-2 antenna as primary and the 11-meter (36-foot) Poker Flat-1 antenna as a back-up. Also identified as a back-up is the 11-meter (36-foot) antenna at Wallops Ground Station.

❑ At the end of the mission's useful lifetime, it will begin its **Decommissioning phase**, which is designed to minimize the potential of creating orbital debris and any possible collision with other satellites in the A-Train. In this phase, the spacecraft will be commanded to maneuver, will use its remaining fuel to inject into a lower disposal orbit and will be shut down. The Earth's atmosphere will gradually pull the satellite downward until it reenters the atmosphere. This phase can last up to 25 years.

Why Study Carbon Dioxide?

Carbon. Without it, life as we know it would not exist. The fourth most abundant element in the universe, carbon is the building block for all life, anchoring all organic substances. Not only is carbon the chemical foundation of all living things, it is present in the atmosphere, in the layers of limestone sediment on the ocean floor and in fossil fuels like coal.

What is Carbon Dioxide?

When carbon bonds with oxygen, it primarily forms carbon dioxide, a colorless, odorless gas composed of two atoms of oxygen and one atom of carbon. Carbon dioxide is produced both naturally--by volcanoes, the respiration of plants, animals and the decay of their remains--and through human activities, such as the burning of fossil fuels for use in transportation, power generation, manufacturing, and heating and cooling buildings; making cement; and deforestation and other land use changes.

It is the most significant human-produced greenhouse gas (gases that contribute to warming Earth's atmosphere by absorbing radiation emitted from Earth's surface). It is also the principal human-produced driver of changes to Earth's climate.

Carbon dioxide is a long-lived gas in Earth's atmosphere. While more than half of carbon dioxide emitted is removed from the atmosphere within a century, about 20 percent remains in the atmosphere for thousands of years.

While generated at Earth's surface, carbon dioxide rises into the free troposphere, which begins at roughly 2 kilometers (1.2 miles) above the surface. There, winds (weather systems and jet streams) transport it around the globe, across oceans and continents.

The Carbon Cycle

The cycling of carbon between its various storage reservoirs (the ocean, atmosphere, terrestrial biosphere and geologic fossil fuel reserves), is known as the carbon cycle.

The global carbon cycle can be defined by two categories, based on their time scales: the geological carbon cycle, which operates over large time scales (millions of years); and the biological/physical carbon cycle, which operates at shorter time scales (days to thousands of years).

Geological Carbon Cycle

In the geological carbon cycle, carbon moves between rocks and minerals, seawater and the atmosphere. Carbon dioxide in the atmosphere can be dissolved in rain or seawater to form carbonic acid. This solution reacts with calcium, magnesium and other elements in Earth's crust through a process called "weathering," to form a wide range of carbonate minerals, such as calcium carbonate (limestone). These minerals can precipitate out of rivers, lakes, the ocean or hydrothermal systems to form layers of carbonate rock. As Earth's plates move, through the process of plate tectonics, these sediments can be subducted underneath the continents. Under the great heat and pressure far below Earth's surface, the carbonate rocks melt and react with other minerals, releasing carbon dioxide. The carbon dioxide is then re-emitted into the atmosphere through volcanic vents, fumaroles (vents in Earth's surface from which hot smoke and gases escape) and hydrothermal systems.

The balance between weathering, subduction (a geological process where one edge of an Earth crustal plate is forced sideways and downward into Earth's mantle below another plate) and volcanism controls atmospheric carbon dioxide concentrations over time periods of hundreds of millions of years. The oldest geologic sediments suggest that, before life evolved, the concentration of atmospheric carbon dioxide may have been 100 times that of the present, providing a substantial greenhouse effect during a time of low solar output. On the other hand, ice core samples taken in Antarctica and Greenland have led scientists to hypothesize that carbon dioxide concentrations during the last ice age (20,000 years ago) were only half of what they are today.

Biological/Physical Carbon Cycle: Photosynthesis and Respiration

Biology also plays an important role in the movement of carbon in and out of the land and ocean through the processes of photosynthesis and respiration. Through photosynthesis, green plants absorb solar energy and remove carbon dioxide from the atmosphere to produce carbohydrates (sugars). Plants and animals effectively "burn" these carbohydrates (and other products derived from them) through the process of respiration, the reverse of photosynthesis. Respiration releases the energy contained in sugars for use in metabolism and renders the carbohydrate "fuel" back to carbon dioxide. Together, respiration and decomposition (respiration that consumes organic matter mostly by bacteria and fungi) return the biologically fixed carbon back to the atmosphere. The amount of carbon taken up by photosynthesis and released back to the atmosphere by respiration each year is 1,000 times greater than the amount of carbon that moves through the geological cycle on an annual basis.

Photosynthesis and respiration also play an important role in the long-term geological cycling of carbon. The presence of land vegetation enhances the weathering of soil, leading to the long-term—but slow—uptake of carbon dioxide from the atmosphere. In the oceans, some of the carbon is taken up by phytoplankton (microscopic marine plants that form the basis of the marine food chain) to make shells of calcium carbonate that settles to the bottom (after they die) to form sediments. During times when photosynthesis exceeded respiration, organic matter slowly built up over millions of years to form coal and oil deposits. All of these biologically mediated processes represent a removal of carbon dioxide from the atmosphere and storage of carbon in geologic sediments.

During the daytime in the growing season, leaves absorb sunlight and take up carbon dioxide from the atmosphere. In parallel, plants, animals and soil microbes consume the carbon in organic matter and return carbon dioxide to the atmosphere. When conditions are too cold or too dry, photosynthesis and respiration cease along with the movement of carbon between the atmosphere and the land surface. The amounts of carbon that move from the atmosphere through photosynthesis, respiration and back to the atmosphere are large and produce oscillations in atmospheric carbon dioxide concentrations that vary by season and from one year to the next. Over the course of a year, these biological fluxes of carbon are more than 10 times greater than the amount of carbon introduced to the atmosphere by fossil fuel burning.

Fire also plays an important role in the transfer of carbon dioxide from the land to the atmosphere. Fires consume biomass and organic matter to produce carbon dioxide (along with methane, carbon monoxide and smoke), and the vegetation that is killed but not consumed by the fire decomposes over time, adding further carbon dioxide to the atmosphere.

Over periods of years to decades, significant amounts of carbon can be stored or released on land. For example, when forests are cleared for agriculture, the carbon contained in the living material and soil is released, causing atmospheric carbon dioxide concentrations to increase. When agricultural

land is abandoned and forests are allowed to re-grow, carbon is stored in the accumulating living biomass and soils, causing atmospheric carbon dioxide concentrations to decrease.

In the oceans, carbon dioxide exchange is largely controlled by sea surface temperatures, circulating currents, and by photosynthesis and respiration. Carbon dioxide can dissolve easily into the ocean and the amount of carbon dioxide that the ocean can hold depends on ocean temperature and the amount of carbon dioxide already present. Cold ocean temperatures favor the uptake of carbon dioxide from the atmosphere, whereas warm temperatures can cause the ocean surface to release carbon dioxide. Cold, downward moving currents such as those that occur over the North Atlantic, absorb carbon dioxide and transfer it to the deep ocean. Upward moving currents, such as those in the tropics, bring carbon dioxide up from deep waters and release it to the atmosphere.

Life in the ocean consumes and releases significant quantities of carbon dioxide. But in contrast to land, carbon cycles between photosynthesis and respiration vary rapidly; that is, there is virtually no storage of carbon as there is on land (e.g., tree trunks and soil). Photosynthetic microscopic phytoplankton are consumed by respiring zooplankton (microscopic marine animals) within a matter of days to weeks. Only small amounts of residual carbon from these plankton settle out to the ocean bottom and over long periods of time represent a significant removal of carbon from the atmosphere.

The Human Role

In addition to the natural fluxes of carbon through the Earth system, human activities, particularly fossil fuel burning and deforestation, are also impacting carbon dioxide levels in the atmosphere.

With the arrival of the Industrial Revolution in 1750, humans needed new sources of fuel to power their activities. The answer was hydrocarbon fuels such as oil, coal and natural gas. While effective, they also came with a cost: when the bond between hydrogen and carbon is broken during combustion, they emit carbon dioxide and other greenhouse gases into our atmosphere.

These activities effectively move carbon more rapidly into the atmosphere than it is removed naturally through the sedimentation of carbon, causing atmospheric carbon dioxide steady-state concentrations to increase. Also, by clearing forests to support agriculture, we transfer carbon from living biomass into the atmosphere (dry wood is about 50 percent carbon). The result is that humans are adding ever-increasing amounts of extra carbon dioxide into the atmosphere.

The concentration of carbon dioxide in Earth's atmosphere has increased from about 280 parts per million before the Industrial Revolution to more than 380 parts per million today. The recent rate of change is both dramatic and unprecedented. As reported by the Intergovernmental Panel on Climate Change last year, carbon dioxide levels have risen by 30 parts per million in just the last 17 years. Previous increases of that size took 1,000 years or longer. Analyses of ice core samples from Greenland and Antarctica reveal that atmospheric carbon dioxide concentrations are higher today than at any time in the last 650,000 years.

The burning of fossil fuels by humans, with contributions from the manufacture of cement, is responsible for more than 75 percent of the increase in human-produced carbon dioxide emissions since the beginning of the industrial era. We know that humans have added more than 200 billion tons of carbon to Earth's atmosphere since 1958. Those emissions are currently adding almost 30 billion tons of carbon dioxide to the atmosphere each year, and this rate of emission is increasing. Each four billion tons of fossil carbon burned raises the atmospheric carbon dioxide concentration by about one part

per million. Every one billion tons of carbon emitted into the atmosphere corresponds to 3.67 billion tons of carbon dioxide.

In addition, as much as 5.5 billion tons of additional carbon dioxide are released each year by biomass burning, forest fires and land-use practices such as “slash-and-burn” agriculture. Combined, these activities have increased atmospheric carbon dioxide levels by almost 20 percent during the past 50 years.

Scientists know the increases in atmospheric carbon dioxide concentration are caused primarily by human activities because fossil fuel carbon has a different ratio of heavy to light carbon atoms. A relative decline in the amount of heavy carbon-13 isotopes in the atmosphere points to fossil fuel sources. Also, the burning of fossil fuels depletes oxygen and lowers the ratio of oxygen to nitrogen in the atmosphere.

The Greenhouse Effect

Earth’s climate is powered by our sun, which sends radiant energy with short wavelengths (in the near infrared, visible and ultraviolet spectrums) to our planet. About a third of this energy gets reflected directly back to space by Earth and its atmosphere; the rest is absorbed by Earth’s surface and atmosphere. Earth balances the incoming energy it absorbs by radiating an equivalent amount of energy back to space. But since Earth’s surface is cool compared to the sun, the energy it radiates is in the infrared part of the spectrum, at much longer wavelengths. While the atmosphere is relatively transparent to the short-wavelength solar radiation, greenhouse gases, such as carbon dioxide, water vapor and ozone, and clouds absorb much of the thermal radiation that Earth’s surface emits. This trapped radiant energy warms Earth’s surface, much as the glass walls of a greenhouse trap the sun’s energy and increase its interior air temperature. This atmospheric “greenhouse effect” benefits life on Earth by warming Earth’s surface, allowing light from the sun to reach Earth but keeping much of that radiant heat from re-radiating back into space. Without it, Earth’s average surface temperature would be below freezing.

But as the old saying goes, too much of a good thing can be bad for you, and too much of a greenhouse effect is definitely bad for our planet.

Ninety-nine percent of Earth’s dry atmosphere (atmosphere not containing water vapor) is composed of nitrogen and oxygen, neither of which has any significant greenhouse effect. Within that other one percent, however, are numerous more complex trace gases, including water vapor, carbon dioxide, methane, nitrous oxide and ozone. These trace gases absorb infrared light in Earth’s atmosphere and prevent it from escaping back to space. While molecules of carbon dioxide amount to only a few hundred parts per million in the atmosphere, they are an efficient greenhouse gas because they absorb thermal radiation in precisely the middle of the wavelengths where Earth’s surface emits most of its heat. When their concentration in our atmosphere increases, they intensify the greenhouse effect and warm our planet. How much it warms depends on a complex set of interconnected Earth system processes.

Atmospheric concentrations of greenhouse gases like carbon dioxide are affected by numerous components of Earth’s climate system, including the ocean and living organisms. Human activities, especially the burning of fossil fuels and deforestation, have significantly increased the concentration of greenhouse gases like carbon dioxide in our atmosphere. As a result, they have intensified the natural greenhouse effect and have caused our planet to warm.

The Carbon Dioxide/Climate Connection

Since the beginning of the industrial era, the buildup of atmospheric carbon dioxide from burning fossil fuels and other human activities has been the primary cause of the observed increases in Earth's surface temperature. Therefore, to accurately estimate the rate of global warming, we have to understand the rate of buildup of carbon dioxide in the atmosphere.

Studies have shown that a doubling of the concentration of atmospheric carbon dioxide results in a two degree Celsius (about 3.5 degrees Fahrenheit) increase in average global temperatures. Temperature increases are even greater at Earth's poles.

During the 20th century, temperatures around the world increased on average by about one degree Fahrenheit (0.6 degrees Celsius). Scientists attribute the increase primarily to increased emissions of carbon dioxide and other greenhouse gases by humans. In just the 10 years from 1995 to 2005, the amount of climate warming due to carbon dioxide concentrations increased by 20 percent, the largest change for any decade in at least the last 200 years.

The effects of global warming are numerous and varied. They include changes in weather patterns, the retreat of glaciers, changes in Arctic sea ice, sea level rise and changes in ocean circulation, to name just a few.

The long timescales required to remove carbon dioxide from our atmosphere mean that past and future carbon dioxide emissions produced by humans will continue to warm our planet and raise sea level for more than 1,000 years to come, even if carbon emissions are substantially reduced from today's levels.

Continuing increases in atmospheric carbon dioxide may impact ocean currents, the jet stream and rain patterns. Some parts of Earth might actually cool while the average global temperature increases.

On land, increased concentrations of atmospheric carbon dioxide can affect climate by changing the way plants grow in a way that warms the air near Earth's surface. Increased carbon dioxide levels can also stimulate photosynthesis, which increases vegetation cover and leaf area.

Scientists know that climate extremes such as droughts have a major effect on atmospheric carbon dioxide levels because plants need water as well as carbon dioxide to grow. A severe U.S. drought in 2002 added 360 million tons of carbon to the atmosphere by reducing the growth of plants that would have otherwise absorbed it. That's equivalent to the yearly emissions from 200 million cars.

Drought caused by a warming climate also increases the frequency and intensity of wildfires. University of Colorado researchers reported last year that the mega wildfires in Southern California in the fall of 2007 released 7.9 million metric tons of carbon dioxide into the atmosphere in a single week, an amount equivalent to the emissions from all cars, trucks, factories and power plants in the state over that period.

Increased carbon dioxide concentrations are also harming Earth's ocean, causing it to become more acidic. The acidity of ocean water is usually expressed in terms of its hydrogen ion concentration, or pH. A pH of 7 is neutral, while lower values indicate more acidic conditions and higher values indicate more alkaline conditions. When carbon dioxide dissolves in seawater, it forms carbonic acid. The surface waters of the ocean are slightly alkaline, but their pH has fallen from about 8.21 to about 8.1

since the beginning of the industrial age as they have absorbed more carbon dioxide. The average pH of the oceans is projected to decrease between 0.14 and 0.35 units in this century. Acidic water is much less hospitable for many types of marine life.

Climate change can also reduce the ocean's ability to absorb carbon dioxide by reducing the solubility of carbon dioxide, suppressing the vertical mixing of ocean waters and decreasing ocean surface salinity. Large-scale ocean circulation changes can also result over long time scales.

As our climate warms, Earth system processes between the climate and the carbon cycle are expected to increase atmospheric carbon dioxide, but scientists do not yet know the magnitude of this effect. This makes it much more difficult to estimate the level of carbon dioxide emissions needed to reach a particular goal for stabilizing the growth of carbon dioxide emissions.

Measuring and Monitoring Carbon Dioxide

Before the late 1950s, scientists relied on indirect measurements of carbon dioxide. High-accuracy measurements of atmospheric carbon dioxide concentration began with the work of Charles David Keeling of the Scripps Institution of Oceanography in 1958. From high atop the Mauna Loa volcano on Hawaii's Big Island, Keeling used a high-precision infrared gas analyzer instrument to analyze the chemical composition of the global atmosphere. These measurements, which continue today, are considered the master time series documenting the changing composition of Earth's atmosphere. Climate scientists use these data as evidence of how human activities are affecting the chemical composition of the global atmosphere.

The Mauna Loa measurements were subsequently followed by continuous direct measurements at multiple other sites in the northern and southern hemisphere. The sites selected were located far from known local sources and sinks of carbon dioxide to provide average measurements.

Precise measurements of carbon dioxide made by the ground-based network since the late 1950s indicate that the concentration of atmospheric carbon dioxide has increased from 310 parts per million to more than 380 parts per million today.

In the 1980s and 1990s scientists recognized that they needed greater coverage of carbon dioxide measurements over continents so that they could estimate sources and sinks of atmospheric carbon dioxide over land as well as ocean. Carbon dioxide analyzer instruments were supplement by air samples collected in glass and metal containers at numerous sites. The samples are analyzed by multiple laboratories, with the most extensive network of air sampling sites operated by the National Oceanic and Atmospheric Administration's Global Monitoring Division. Worldwide databases of measurements are maintained by the Carbon Dioxide Information Analysis Center and the World Data Centre for Greenhouse Gases in the World Meteorological Organization Global Atmosphere Watch program.

The Carbon Dioxide Information Analysis Center of the U.S. Department of Energy tracks and monitors carbon dioxide emissions from a global network of ground-based sites. This network provides a tremendous amount of insight into the global abundance of carbon dioxide and its variability over seasons.

The current ground-based carbon dioxide monitoring network of about 100 sites does not have the spatial coverage, resolution or sampling rates necessary to identify natural sinks responsible for absorbing carbon dioxide, or the processes that control how the efficiency of those sinks changes from

one year to the next. Large parts of the world, especially in India, Africa, Siberia and South America, have few, if any, monitoring stations.

To put the increases measured since the late 1950s into perspective and compare them with previous natural cycles, scientists turned to ice core samples from Greenland and Antarctica. Periods of low carbon dioxide concentration in the samples correspond to ice ages, while higher carbon dioxide concentrations are linked to warmer periods. By analyzing the composition of air bubbles in these cores, they were able to show that carbon dioxide levels were much lower during the last ice age than over the last 10,000 years of the current Holocene epoch. From 10,000 years ago through the start of the industrial era, carbon dioxide levels remained within a range of 280 parts per million, plus or minus 20.

Carbon Sinks

The concentration of carbon dioxide in our atmosphere is determined by the balance between its sources (emissions due to human activities and natural processes) and its sinks (reservoirs that pull carbon dioxide out of the atmosphere and store it). Natural processes, including photosynthesis, respiration, decay and the exchange of gases between the ocean and the atmosphere result in huge exchanges.

The current state of knowledge of these sources and sinks was recently summarized in the first State of the Carbon Cycle Report, released by the U.S. Climate Change Science Program in 2007. Results summarized there indicate that plant growth on land absorbs between 48 and 66 billion metric tons of carbon each year, while respiration and decay returns about 55.5 billion metric tons of carbon back to the atmosphere each year. Meanwhile, the ocean absorbs about 92 billion metric tons of carbon from the atmosphere and releases about 90 billion metric tons of carbon back into the atmosphere each year. These exchanges are much larger than the carbon emissions from human activities (about 9 billion metric tons of carbon each year), but the natural sources are roughly balanced by the natural sinks. Human activities constitute a net source of carbon to the atmosphere.

When scientists try to account for sources and sinks of carbon dioxide in the atmosphere, they uncover a major mystery. Between 1751 and 2003, human activities added between 306 and 626 billion tons of carbon to the atmosphere as carbon dioxide. Fossil fuel combustion and cement manufacturing account for 274 to 334 billion tons, or 65 percent of this emission. Most of the rest has been attributed to land use changes (primarily forest clearing), which have added between two and 322 billion tons of carbon to the atmosphere.

Meanwhile, only about 182 to 192 billion tons of the carbon emitted into the atmosphere by human activities over this period has remained in the atmosphere. The remaining 60 percent of the carbon (114 to 444 billion tons) was apparently absorbed (at least temporarily) by the ocean and continents. Recent inventories of the ocean can account for about 113 to 161 billion tons, or about half of the missing carbon. The remaining 142 billion tons (plus or minus 160 billion) must have absorbed somewhere on land, but scientists don't know where most of the land sinks are located or what controls their efficiency over time.

The large uncertainties in the numbers listed above are not simply artifacts of poor measurement collection in the past. Similar uncertainties are seen in recent carbon inventories. For example, during the 1990s, the average annual carbon emissions due to fossil fuel use and cement manufacturing were about 6.4 billion tons (that number increased to 7.2 billion tons per year in 2000-2005 and to about nine billion tons by 2008). Land use and land use change, primarily deforestation and harvest

of wood products, contributed an additional 1.6 billion tons of carbon. Of the almost eight billion tons released per year by human activities, approximately 3.2 billion tons remained in the atmosphere, resulting in an increase in atmospheric carbon dioxide. In addition, approximately 2.2 billion tons diffused into the world's ocean, thus leaving about 2.6 billion tons unaccounted for.

What happened to the leftover 2.6 billion tons? Scientists don't know for sure, but evidence points to the land surface. For example, re-growth of forests since the massive deforestation in the Northern Hemisphere over the last century could account for some of the missing carbon. Another possibility is that the changing climate has contributed to greater uptake of carbon than release of carbon. However, the underlying mechanisms are so poorly understood that scientists refer to the mystery as the "missing" carbon sink.

Natural sinks are difficult to quantify because they tend to vary highly from one season to the next and one year to the next. In some years, most fossil fuel emissions are absorbed by the sinks, while in others virtually none is absorbed and the atmospheric carbon dioxide increases at the same rate as fossil fuel emissions.

The largest known natural carbon sink on land is the Canadian boreal forest, which holds about 22 percent of the total carbon stored on Earth's land surface. That is almost twice the amount stored per unit area as tropical forests. Undisturbed tropical forests, which equal about 46 percent of global biomass, are a major uncertainty in the global carbon budget.

The ocean absorbs carbon dioxide from the atmosphere in some places and emits it in others. Cooler waters can absorb more carbon dioxide. Cold, carbon dioxide rich waters from high latitudes can sink and be transported great distances, before they are brought back to the surface, where they can release the carbon dioxide back to the atmosphere.

Scientists recently reported up to a 30 percent decrease in the efficiency of the Southern Ocean (the southernmost waters of Earth's ocean) carbon sink over the past 20 years. It removes about 700 million tons of human-produced carbon from the atmosphere each year. Its decreased efficiency has been linked to higher winds around Antarctica due to global warming and the ozone hole. The winds enhance the ventilation of carbon-rich deep waters.

An improved understanding of the carbon sinks is essential for accurate predictions of the impact of carbon dioxide on Earth's climate. The natural carbon dioxide sinks are currently absorbing about 60 percent of all human-produced carbon emissions, slowing down climate change considerably. If the sinks of carbon dioxide were to suddenly lessen, it could be equivalent to adding up to nine billion tons of carbon to the atmosphere every year instead of 6.4 billion, with a corresponding spike in atmospheric carbon dioxide concentrations. This is equivalent to a 34 percent increase in effective carbon emissions into the atmosphere. In a world trying to manage carbon in order to mitigate carbon dioxide increase and climate change, uncertainty about the missing carbon sink is a major concern. Today's carbon dioxide levels of about 384 parts per million would be about 100 parts per million higher were it not for these natural sinks.

Based on carbon exchange rates in the European Union this summer, those natural sinks would be worth about $390 billion a year if an equivalent sink had to be created through other options such as removing and storing carbon from the atmosphere (a process known as carbon sequestration). The value of the missing sink could rise dramatically should rates of carbon dioxide increase, fueling higher demand for carbon credits.

It is critically important that we understand the processes that control these sources and sinks so that we can predict their behavior in the future. Will these sinks continue to help soak up the carbon dioxide that we are producing? Or will they stop or even reverse and aggravate the atmospheric increases?

Characterizing and better quantifying the missing sink, especially its geographical distribution, is crucial to predicting future carbon dioxide increases and to assist policymakers in developing and evaluating carbon management strategies. Better understanding of the geographical distribution of the missing sink, in particular, will provide a lot of insight into the underlying mechanisms and inform studies of the processes involved.

Current climate models predict that an increasing fraction of total human-produced carbon dioxide emissions will remain in the atmosphere during this century. Most also predict that both the ocean and land areas will become less efficient sinks. This means that it will require even larger carbon emissions cuts than before to begin to have any substantive effect on stabilizing atmospheric carbon dioxide.

Other Carbon Questions

Scientists have a number of other unanswered questions about this key greenhouse gas. Among them:

- ❑ What natural processes absorb carbon dioxide from human emissions?

- ❑ Will those processes continue to limit increases in atmospheric carbon dioxide in the future, as they do now? Or will they stop or even reverse and accelerate the atmospheric increases?

- ❑ Is the missing carbon dioxide being absorbed primarily by land or the ocean and in what proportions?

- ❑ Which continents absorb more than others?

- ❑ Why does the increase in atmospheric carbon dioxide vary from one year to the next while the emission rates increase uniformly?

- ❑ How will carbon dioxide sinks respond to changes in Earth's climate or changes in land use?

- ❑ What are the processes controlling the rate at which carbon dioxide is building up in Earth's atmosphere? That rate is currently estimated at about two parts per million by volume per year, or as much as a half percent per year—a rate that exceeds even the worst-case scenario for carbon dioxide emission increases considered in the Intergovernmental Panel on Climate Change's Fourth Assessment Report.

- ❑ Where are the sources of carbon dioxide?

- ❑ What is the geographic distribution and quantity of carbon dioxide emitted through both fossil fuel combustion and less well understood sources, such as ocean outgassing, deforestation, fires and biomass burning? How does this distribution change over time?

Carbon Dioxide: Selected Statistics

❑ Carbon dioxide level during the last ice age: 180 parts per million; after the glaciers retreated: 280 parts per million; today: more than 384 parts per million

❑ According to the Global Carbon Project, the annual growth rate of atmospheric carbon dioxide levels rose 1.3 parts per million per year during the 1970's; 1.6 parts per million during the 1980s; 1.5 parts per million during the 1990s; 2 parts per million from 2000-2007; 2.2 parts per million for 2007 alone

❑ While home to just five percent of Earth's people, the United States produces about 25 percent of all carbon dioxide emissions. Carbon dioxide emissions from China have now exceeded those of the United States. Should current trends continue, China is projected to produce about 40 percent of the world's total by 2025.Carbon dioxide emissions from developing nations are expected to surpass emissions by developed nations by 2020. In less than two decades, developing nations have doubled carbon output and now account for just more than half of all worldwide emissions. In 1990 they accounted for just one third.

❑ Carbon dioxide emissions due to global annual fossil fuel burning and cement manufacture together have increased by 70 percent over the last 30 years

❑ Carbon dioxide levels rose less than one percent in the 10,000 years before the Industrial Revolution; since 1751, they've risen 37 percent

❑ The first 50-parts-per-million increase above pre-industrial levels was reached in the 1970s; the second 50-parts-per-million increase took just 30 years

❑ A typical 500-megawatt coal-fired power plant releases about three million tons of carbon dioxide each year

❑ The average automobile produces 19 pounds of carbon dioxide for every gallon of gasoline or diesel burned

❑ The annual carbon "footprint" of the average American (the amount of carbon dioxide created through all of his or her activities): 20.4 tons

❑ In this decade, humans have removed 13,000,000 hectares of tropical forests each year, primarily in the tropical Americas, tropical Asia and tropical Africa. That deforestation emitted 1.5 billion tons of carbon each year during that time frame, or 16 percent of all emissions.

❑ According to the Global Carbon Project, an international consortium of scientists that tracks carbon emissions, in 2007 alone, carbon released from burning fossil fuels and cement production increased nearly three percent over that released in 2006, to 8.47 billion tons. That level of emission could result in a global temperature rise of more than 11 degrees Fahrenheit by the end of this century.

❑ According to the U.S. Department of Energy, humans have added about 315 billion tons of carbon to the atmosphere since the start of the Industrial Revolution through the use of fossil fuels, land use changes and cement production.

What the Orbiting Carbon Observatory Will Do

The Orbiting Carbon Observatory--the first-ever remote sensing mission dedicated to studying carbon dioxide--is the latest mission in NASA's ongoing study of the global carbon cycle. The mission provides a key new measurement that can be combined with other ground and aircraft measurements and satellite data to answer important questions about the processes that regulate atmospheric carbon dioxide and its role in the carbon cycle and climate. This information could help policymakers and business leaders make better decisions to ensure climate stability and, at the same time, retain our quality of life. The mission will also serve as a pathfinder for future long-term satellite missions to monitor carbon dioxide.

This experimental NASA Earth System Science Pathfinder Program mission will measure atmospheric carbon dioxide from space, mapping the globe once every 16 days for at least two years. It will have the precision, resolution and coverage needed to provide the first complete picture of the geographic distribution of both human and natural sources of carbon dioxide emissions, as well as the places where they are absorbed (sinks), at regional scales, everywhere on Earth, and will determine how these distributions vary from season to season.

Mission data will be used by the atmospheric and carbon cycle science communities to improve global carbon cycle models, reduce uncertainties in forecasts of how much carbon dioxide is in the atmosphere, and make more accurate predictions of global climate change.

The Orbiting Carbon Observatory will dramatically improve measurements of carbon dioxide over space and time, uniformly sampling Earth's land and ocean and collecting approximately 8,000,000 measurements of atmospheric carbon dioxide concentration over Earth's entire sunlit hemisphere every 16 days for at least two years.

Scientists will use these data to generate maps of carbon dioxide emission and absorption at Earth's surface on scales comparable to the size of the state of Colorado. These regional-scale global maps will provide new tools for locating and identifying carbon dioxide sources and sinks.

Locating the sources and sinks of carbon dioxide is a daunting assignment. Concentrations of atmospheric carbon dioxide rarely vary by more than two percent from one pole of Earth to the other (that's eight parts per million by volume out of a total background level of about 380 parts per million). In addition, the global transport of carbon dioxide in Earth's atmosphere rapidly makes it difficult to spot sources and sinks. Scientific models have shown that we can reduce uncertainties in our understanding of the balance of carbon dioxide in our atmosphere by up to 80 percent if data from the existing ground-based carbon dioxide monitoring network can be augmented with high-resolution, global, space-based measurements of atmospheric carbon dioxide concentration accurate to 0.3 to 0.5 percent (about one to two parts per million) on regional to continental scales. The Orbiting Carbon Observatory will have just such a level of precision.

The mission will use three high-resolution spectrometers to measure how carbon dioxide and molecular oxygen absorb sunlight reflected off Earth's surface when viewed in the near-infrared part of the electromagnetic spectrum. Each spectrometer focuses on a different, narrow range of colors to detect light with the specific colors absorbed by carbon dioxide and molecular oxygen. By analyzing these spectra, scientists can measure the relative concentrations of those chemicals in the sampled columns of Earth's atmosphere. The ratio of measured carbon dioxide to molecular oxygen is used to determine the atmospheric carbon dioxide concentration. Scientists will analyze observatory data

using global transport models similar to those used for weather prediction to quantify carbon dioxide sources and sinks.

The mission is designed to detect changes in the efficiency of sources and sinks from month to month over seasonal cycles and from year to year during its two-year planned lifetime. For example, forests are efficient carbon dioxide sinks in the spring and summer when they are growing rapidly and absorbing carbon dioxide to build leaves, branches and roots. Because trees need sunlight, water and other nutrients to grow, in addition to carbon dioxide, they are better sinks when these other factors are present. During the winter, when trees drop their leaves, they become sources of carbon dioxide. They also release carbon dioxide when they burn. Orbiting Carbon Observatory measurements of carbon dioxide can therefore be combined with observations of rainfall, forest fires and other environmental data to help us understand why the amount of carbon dioxide absorbed by surface sinks varies dramatically from year to year, while carbon dioxide emissions increase at a steady rate.

Orbiting Carbon Observatory measurements of atmospheric carbon dioxide will enable far better estimates of carbon exchanges between the atmosphere and other reservoirs within the active part of the global carbon cycle, principally the ocean and terrestrial ecosystems.

The mission will contribute to a number of additional scientific investigations related to the global carbon cycle. These include:

- ❑ The dynamics of how the ocean exchanges carbon
- ❑ The seasonal dynamics of northern hemisphere terrestrial ecosystems in Eurasia and North America
- ❑ The exchange of carbon between the atmosphere and tropical ecosystems due to plant growth, respiration and fires
- ❑ The movement of fossil fuel plumes across North America, Europe and Asia
- ❑ The effect of weather fronts, storms and hurricanes on the exchange of carbon dioxide between different geographic and ecological regions
- ❑ The mixing of atmospheric gases across hemispheres

The observatory will fly in a loose formation with the other missions of the Earth Observing System Afternoon Constellation (also known as the “A-Train”). This formation will enable researchers to correlate observatory data with data acquired by instruments on other spacecraft in the constellation. In particular, scientists will compare observatory data with nearly simultaneous carbon dioxide measurements acquired by the Atmospheric Infrared Sounder instrument flying on NASA’s Aqua satellite.

The Orbiting Carbon Observatory’s mission is expected to overlap with Japan’s Greenhouse Gas Observing Satellite, also scheduled for launch in early 2009. While using different measurement approaches, both missions will make global measurements of atmospheric carbon dioxide with the precision and sampling needed to identify sources and sinks. Scientists will compare and combine data from the two missions to improve our understanding of natural processes and human activities that control atmospheric carbon dioxide and its variability. The two missions are exploring opportunities for cross-calibration, cross-validation and coordinated observations that may benefit the carbon

cycle science community by increasing spatial coverage and increasing the frequency of observations by either satellite alone.

The Orbiting Carbon Observatory and Carbon Management

Carbon management is a key resource management and policy issue of the 21st century. Continued increases in atmospheric carbon dioxide concentrations will alter our climate and result in accompanying changes in Earth's energy and water cycles that will profoundly impact society and Earth's ecosystems. It's been estimated that at the current carbon emission rate, in less than 90 years, carbon emission levels would have to be completely eliminated just to cap carbon dioxide levels at twice their pre-industrial era level (560 parts per million). This implies that controls on emissions alone will not be sufficient—we will need to remove carbon dioxide from the atmosphere.

Carbon sequestration is one strategy to reduce emissions of greenhouse gases like carbon dioxide. Examples include strategically planting trees or crops to remove carbon from the atmosphere or mechanically removing carbon dioxide when it is created and then storing it in underground reservoirs or in the deep ocean basins. Several pilot projects to sequester carbon are currently underway around the world, primarily by energy companies.

NASA's carbon management assets focus on carbon emissions and sequestration in land, ocean and geologic systems. These assets include the NASA space missions Landsat, Terra, Aqua, Aura, SeaWiFS, and Orbiting Carbon Observatory spacecraft to measure and monitor carbon sequestration in terrestrial, freshwater and ocean environments, and the flow of carbon among them and the atmosphere.

The Orbiting Carbon Observatory will make measurements at the regional scales that will be relevant to decision makers. It will give them direct insight into the impact land use changes have on carbon dioxide absorption and emission. By knowing where important natural sinks are, policymakers can make more informed land-use decisions that take into consideration the impact they would have on atmospheric carbon dioxide levels.

Orbiting Carbon Observatory data may also make it easier for governments and decision makers to monitor compliance with future carbon dioxide emissions treaties that offer credits for reducing carbon dioxide emissions and removing these emissions from the atmosphere.

In addition, a better understanding of the processes that are controlling the rate of carbon dioxide buildup in the atmosphere today will help to predict how fast this greenhouse gas will build up in the future, and how much time we will have to adapt to the resulting climate change.

Science Goals and Objectives

The primary objective of the Orbiting Carbon Observatory is to substantially increase our understanding of how carbon dioxide sources and sinks are geographically distributed on regional scales and to study how this distribution changes over time. The mission will satisfy this objective by providing globally distributed, space-based measurements of the concentration of carbon dioxide present in Earth's atmosphere with the accuracy and resolution necessary to characterize this distribution. The atmospheric science community, including the Orbiting Carbon Observatory science investigators, will use the data from these measurements to improve global carbon cycle models, reduce uncertainties in forecasts of how much carbon dioxide is in the atmosphere and make more accurate predictions of global climate change.

The mission goals are to:

- ❑ Collect the space-based measurements needed to retrieve estimates of the atmospheric concentration of carbon dioxide with random errors and systematic biases no larger than 0.3 percent (one part per million) on regional scales (1,000 kilometers by 1,000 kilometers, or 386 miles by 386 miles) over both continents and oceans on the sunlit hemisphere of Earth at semi-monthly intervals for at least two years;

- ❑ Record, calibrate, validate, publish and archive science data records and calibrated geophysical data products in a NASA Distributed Active Archive Center for use by the scientific community; and

- ❑ Validate a space-based measurement approach and analysis concept that could be used for future systematic carbon dioxide monitoring missions.

Spacecraft

Built in Dulles, Va., by Orbital Sciences Corp., the Orbiting Carbon Observatory is one of seven scientific spacecraft that Orbital has built, or is in the process of building, for NASA that is based on the company's evolving line of LEOStar satellite platforms. The observatory is based on Orbital's LEOStar-2 configuration, on which several other NASA science satellite projects were produced, including the highly successful Galaxy Evolution Explorer, Solar Radiation and Climate Experiment and Aeronomy of Ice in the Mesosphere low-Earth orbit missions, as well as the Dawn deep space mission to the dwarf planet Ceres and asteroid Vesta.

The majority of the spacecraft components have been flight proven or flight qualified. For the Orbiting Carbon Observatory, the spacecraft has been elongated to accommodate the instrument and the instrument has been embedded into the structure of the spacecraft.

The Orbiting Carbon Observatory is about the size of a phone booth. Its main structure, or "bus," is made of aluminum honeycomb panels in a hexagon-shaped structure that measures about 2.12 meters (6.96 feet) long by 0.94 meters (3.08 feet) wide. The three-axis stabilized bus houses the instrument and provides power; receives and processes commands from the ground; and receives, stores and downlinks the science data collected by the instrument. The observatory, including the spacecraft, science instrument, and onboard propellant, weighs 441.4 kilograms (972 pounds). A metal ring, mounted to the bottom of the structure, attaches the observatory to the launch vehicle and separates the two after launch.

While the observatory is designed to last for two years, its resistance to radiation at its orbiting altitude of 705 kilometers (438 miles), and the 45 kilograms (99.2 pounds) of propellant that it carries should allow the mission to operate well beyond its nominal two-year lifetime.

Thermal Control

The thermal system maintains satellite equipment at proper temperatures. It uses a combination of active and passive components. The active components are electrical heaters, which maintain the spacecraft interior at operational temperature range during eclipses and in the unlikely event of the satellite entering a safe hold condition. The passive components are thermal radiators (which remove excess heat from the observatory electronics), blankets and thermal paints on the observatory's external surfaces. The instrument optics will be cooled to approximately 267 degrees Kelvin (21 degrees Fahrenheit) by a passive radiator. The focal plane arrays used in the two carbon dioxide channels are cooled to approximately 123 degrees Kelvin (-238 degrees Fahrenheit) using a cryocooler, which is an active Stirling cooler. The focal plane array in the oxygen A-band channel is cooled to 182 degrees Kelvin (-131 degrees Fahrenheit) by a pulse tube cryocooler, which uses a passive radiator to radiate its heat to space.

Electrical Power

The observatory's power is generated, stored and distributed by the electrical power subsystem. The power required to run the entire observatory is 813 watts, equivalent to nine common household light bulbs. The 28-volt power comes from a pair of symmetrical solar array wings that are covered with gallium arsenide solar cells. The arrays are extended in orbit on opposite sides of the satellite's main platform. Two small drive motors work with the spacecraft's computer software to keep the arrays

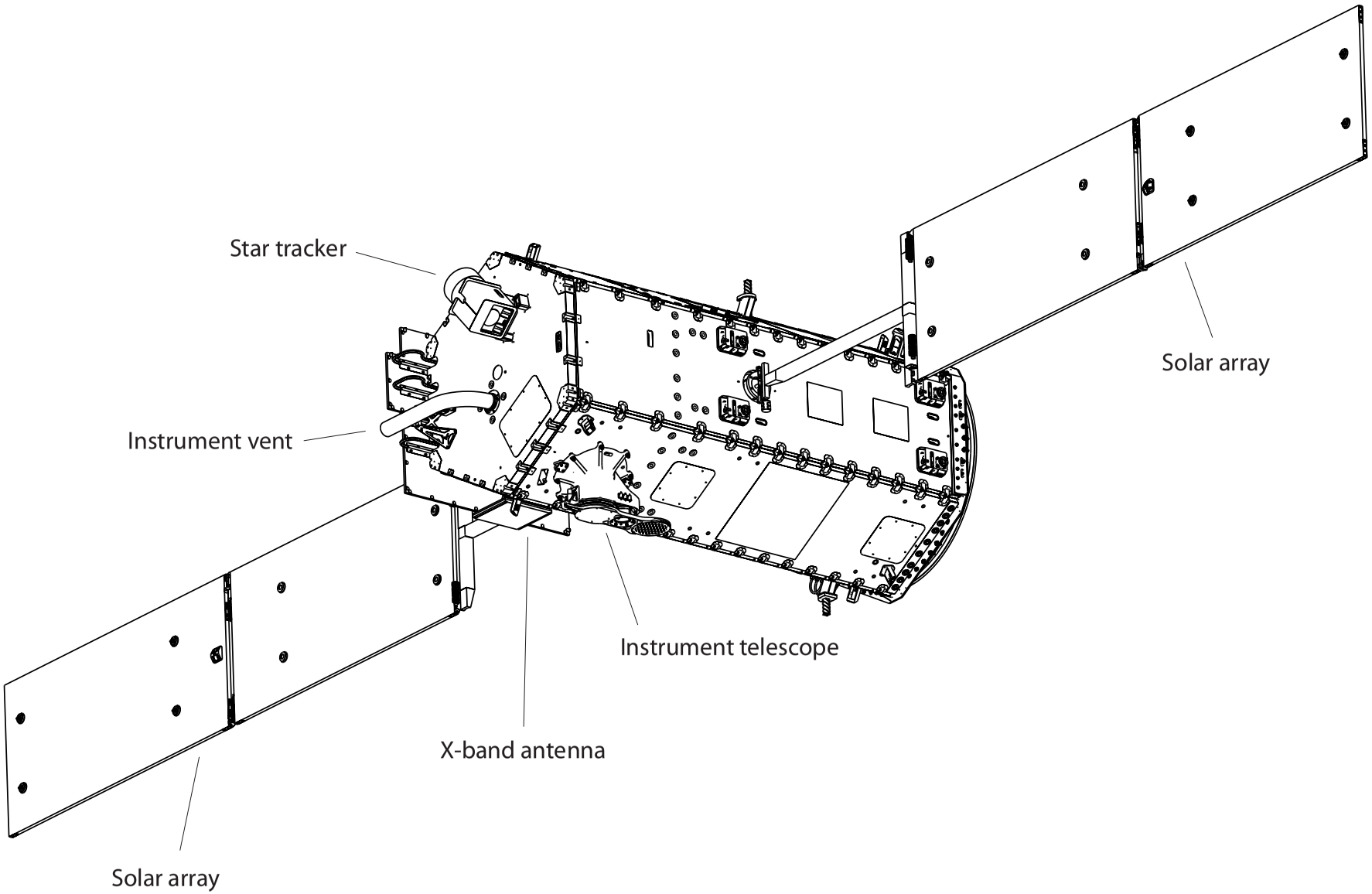
Star tracker
Instrument vent
Solar array
Instrument telescope
X-band antenna
Solar array

Spacecraft

pointed at the sun so that adequate power is always available to charge the battery and run all the components and the instrument.

Each wing of the solar array consists of two panels, each measuring 0.66 by 1.47 meters (26 by 58 inches), representing a total surface area of 3.88 square meters (41.7 square feet). The observatory wingspan, when the solar arrays are fully deployed, measures approximately 9 meters (29 feet) from tip to tip. The solar arrays generate an average of 900 watts of power when in orbit.

During times when the sun is eclipsed from the satellite, power is provided by a 35-amp-hour nickel-hydrogen battery. The battery also provides power in the unlikely event the observatory goes into safe hold during the period where the solar arrays are not pointed toward the sun.

Flight Software

The observatory uses stored commands to perform its normal operations and also receives commands and sequences from Earth. The software on the flight computer translates the stored and ground commands into actions for various spacecraft subsystems. The flight software also gathers science data as well as engineering telemetry for all parts of the spacecraft and continuously monitors the health and safety of the observatory.

The flight software can perform a number of autonomous functions, such as attitude control and fault protection, which involve frequent internal checks to determine whether a problem has occurred. If the software senses a problem, it will automatically perform a number of preset actions to resolve the problem or put the spacecraft in a safe mode until ground controllers can respond.

Observatory Avionics System

The observatory avionics, consisting of a central electronic unit and the attitude and power electronics, contains all the hardware and software to manage the observatory's attitude control, power, propulsion, thermal management and telecom functions. All the satellite's computing functions are performed by the central electronics unit. The heart of this subsystem is a Rad 6000 computer, which runs the observatory's flight software and controls various other parts of the satellite. The computer is a radiation-hardened version of the PowerPC chip used on many other spacecraft, such as the Mars Exploration Rovers. The central electronics unit has one gigabyte of random access memory and three megabytes of non-volatile memory, which allows the system to maintain data even if power is lost.

Among the tasks managed by the central electronics unit and attitude and power electronics are the deployment of the solar arrays; precision determination and control of the satellite's orientation, or attitude; thermal management; automated fault detection and correction; communication with the science instrument; and acquisition, storage and transmission of science data. The central electronics unit also controls a 96-gigabit solid-state recorder that continuously stores science and engineering data from the observatory for downlink to the ground.

An uplink card operates independently of the onboard computer and is responsible for receiving, validating and decoding commands from the ground. Commands are routed to three paths for execution: special commands, normal command traffic and stored commands. Special commands operate independently of the onboard computer, bypassing the processing associated with normal command traffic. Special commands are typically used for reconfiguration and/or hard resets for the command and data handling subsystem. They can also be used to place the satellite in a "safe" mode, if this is

commanded from the ground. The uplink card also receives timing signals from a global positioning system receiver and synchronizes timing on all observatory subsystems.

A downlink card receives telemetry data from various spacecraft subsystems, the science instrument and the solid-state recorder, and prepares these data for transmission to ground stations.

Telecommunications

The observatory's radio system operates in both the S-band and the X-band ranges of the microwave spectrum. Commands will be uplinked to the spacecraft as required using redundant S-band receivers linked to a pair of helical omni-directional antennas. Uplinked commands include those for mode changes, pre-planned ground contacts or orbit maintenance burns. Science and housekeeping/health status data will be downlinked at a rate of 150 megabits per second through the X-band transmitter and a body-mounted X-band patch antenna. Spacecraft and instrument housekeeping data can also be returned using an S-band link to a ground station or through a NASA Tracking and Data Relay Satellite.

Science data and information about the spacecraft's health and safety stored on the observatory's solid-state recorder is downlinked once daily to the ground station at Poker Flats, Alaska. The observatory tracks the ground station during each downlink session. Downlink opportunities exist on every orbit, but only one 10-minute pass is required each day to download all the science data and engineering telemetry.

The downlinked science data will then be transmitted to the ground data system center at JPL, which will process and analyze these data. As the data are downloaded, the Mission Operations Center at Orbital will monitor and archive real-time housekeeping data, using software that allows them to spot any problems. Science data telemetry and any additional data not contained in the science data stream will be forwarded to JPL via the Internet.

The observatory will coordinate operations with other A-Train spacecraft through the Earth Science Mission Operations office at NASA's Goddard Space Flight Center, Greenbelt, Md.

Attitude and Control System

The attitude and control system provides high stability for the spacecraft during science operations and points the instrument for science and calibration observations. It also points the body-mounted X-band antenna at the ground station for data downlink.

The Orbiting Carbon Observatory is a "three-axis-stabilized" spacecraft, meaning it can be held in any orientation in relation to space. The system is fully autonomous, relying on onboard systems to control the satellite orientation with no intervention required from ground controllers.

Unlike some other spacecraft, the Orbiting Carbon Observatory requires no thrusters to adjust its orientation. Instead, it achieves this with four devices called reaction wheels, which use the momentum of spinning wheels to nudge the satellite in one direction or another. Periodically the reaction wheels accumulate too much momentum, which requires the use of three devices called magnetic torque rods -- somewhat like large electromagnets -- to push against Earth's magnetic field and cancel out some of the momentum in the wheels. The torque rods use information from a device called a three-axis magnetometer that senses the orientation of Earth's magnetic field.

The satellite's orientation is sensed and verified by a star tracker, while its rotation rates are sensed by an onboard inertial measurement system. The star tracker views the sky and processes the images gathered to recognize star patterns as they pass through the tracker's field of view.

The inertial measurement system on the observatory is a three-axis laser gyroscope that senses the observatory's attitude rate and controls the observatory attitude between the star tracker updates.

Sun sensors provide a relatively coarse measure of the sun's direction if the satellite should enter safe hold mode. There are 13 sun sensors on various parts of the observatory such that more than one sensor is pointing toward the sun regardless of observatory orientation.

In addition to pointing the instrument, the spacecraft must know where on Earth the footprint of the instrument is located. An onboard global positioning system receiver provides that information.

Propulsion

The Orbiting Carbon Observatory requires onboard propulsion to raise its orbit from launch vehicle separation to the operational orbit within the A-Train constellation. The propulsion system is also used to maintain the observatory in a prescribed location within the A-Train. The observatory adjusts its orbit by firing any combination of its four onboard thrusters, each of which each provides about 0.5 Newton's (0.1 pound) of thrust. The thrusters use hydrazine propellant. Orbit-raising burns and inclination corrections require the spacecraft to be reoriented. The propulsion system carries 45 kilograms (99.2 pounds) of hydrazine.

Physical and Functional Redundancies

The Orbiting Carbon Observatory is a single-string spacecraft. This means that most spacecraft subsystems do not have backups. However physical functional redundancies have been incorporated whenever possible. Some of the subsystems have redundant units such as S-band receivers, solar array drive electronics, reaction wheels and thrusters. There are other subsystems whose functionality can be accomplished by other units. Examples of functional redundancy include the ability to use the coarse sun sensors to provide spacecraft attitude instead of the star tracker, and performing onboard calculation of the spacecraft's ground track instead of using the global positioning system receiver.

Instrument

The Orbiting Carbon Observatory will carry a single science instrument, developed by Hamilton Sunstrand, Pomona, Calif.

The instrument consists of three high-resolution spectrometers that are integrated into a common structure and fed by a common telescope. It measures 1.6 meters by 0.4 meters by 0.6 meters (5.3 feet by 1.3 feet by 2 feet), weighs 135 kilograms (298 pounds) and requires less than 125 watts of power.

The spectrometers are designed to measure how carbon dioxide and molecular oxygen absorb sunlight reflected off Earth's surface when viewed in the near-infrared part of the electromagnetic spectrum. Each spectrometer focuses on a different, narrow range of colors to detect light with the specific colors absorbed by carbon dioxide and molecular oxygen. Scientists will analyze these measurements to very precisely estimate the concentration of atmospheric carbon dioxide all over the globe. Once validated, this information will be used to infer the locations of carbon dioxide sources and sinks.

The instrument views Earth through an f/1.8 Cassegrain telescope mounted in a port in the side of the spacecraft bus. Reflected sunlight captured by the telescope is first focused at a field stop (a round aperture in an eyepiece that limits the field of view) and then realigned before entering a relay optics assembly that ensures that all three spectrometer channels view the same scene. A beam splitter splits up the light, which is then refocused on a narrow slit that forms the entrance to each of the three spectrometers. Each slit measures only about 3 millimeters (0.1 inch) long and 25 microns (0.00098 inch) wide. The slits produce fields of view that are approximately 1/100th of a degree wide by eight-tenths of a degree long. A narrow-band filter ensures that only light from the desired spectral range reaches its particular channel, while a polarizer in front of each spectrometer slit keeps out any light that is not polarized in the desired direction.

Once light passes through each of the three spectrometer slits, it is aligned, then divided up by a diffraction grating, or grid, into its different component colors, or wavelengths, traveling in different directions, much as shining light through a prism creates a rainbow.

The light is then refocused by a camera lens onto each spectrometer's two-dimensional 1,024-pixel-by-1,024-pixel focal plane array, where it forms a two-dimensional image of a spectrum and is recorded. Originally designed for use in astronomy, the observatory's focal plane arrays are image sensing devices consisting of an array of light-sensing pixels at the focal plane of a lens. Each is designed to detect very fine differences in wavelength within its spectrometer's spectral range. The two carbon dioxide spectrometer channels use mercury cadmium telluride as their photosensitive materials, while the molecular oxygen A-band channel uses silicon.

Resembling bar codes, the spectra produced have dark lines where carbon dioxide or oxygen have absorbed specific colors. By measuring the light absorbed in each of these dark lines, scientists can count the number of carbon dioxide or oxygen molecules in the atmosphere at that point.

Design Considerations

The Orbiting Carbon Observatory instrument and measurement approach are new. However, key instrument components, such as the mission's optical approach, holographic grating, cryocooler and

detectors, have been flight qualified for other missions, including the Total Ozone Mapping Spectrometer, the Atmospheric Infrared Sounder on NASA's Aqua spacecraft, and the Tropospheric Emission Spectrometer on NASA's Aura spacecraft.

The need for sensitivity, stability and speed required innovations in optics, electronics, structures and thermal control. The three spectrometers incorporate an unprecedented combination of spectral resolving power and optical speed to provide the required sensitivity and short exposure times. The molecular oxygen spectrometer has a resolving power of approximately 22,000 while the carbon dioxide spectrometers have resolving powers of about 24,000. A fast (f/1.8) optical design and broad dynamic range were adopted to provide acceptable signal-to-noise ratios within the instrument's small measurement footprints over the full range of viewing conditions expected over Earth's sunlit hemisphere.

The high spectral resolution and fast optical design placed stringent constraints on the instrument structure and thermal control system, which had to maintain tolerances smaller than one-tenth the thickness of a human hair through launch and the temperature variations the spacecraft will see as it travels in and out of Earth's shadow.

To minimize electronic noise that would generate measurement errors, the light detectors for each spectrometer must remain very cold. To ensure that the detectors remain sufficiently cold, the instrument uses a cryocooler, which is a refrigeration device. The cryocooler keeps the temperature of the detectors in the two carbon dioxide channels near -150 degrees Celsius (-240 degrees Fahrenheit) and the detector for the oxygen A-band channel near -90 degrees Celsius (-131 degrees Fahrenheit).

The Spectrometers

The Orbiting Carbon Observatory's three parallel, high-resolution, near-infrared grating spectrometers make simultaneous measurements of the intensity of reflected sunlight at the same location on Earth's surface. They divide sunlight reflected from Earth's surface into a rainbow of colors, called a spectrum. The spectrometers, which use similar optical designs, are "tuned" to recognize the specific colors of infrared light absorbed by carbon dioxide and molecular oxygen. They will measure the intensity of the light in these colors with unprecedented accuracy.

As light passes through Earth's atmosphere and is reflected from the surface, molecules of each gas in the atmosphere leave their own telltale "fingerprint" on the reflected solar radiation. The Orbiting Carbon Observatory's spectrometers detect these molecular fingerprints. By analyzing the level of absorption displayed in these spectra, scientists can tell how much of the gas is present in the region where the measurement was taken.

Each spectrometer measures a specific wavelength band, or range of colors, within the near-infrared part of the electromagnetic spectrum. Near-infrared is invisible to the human eye. Each of these widely separated ranges of colors gives scientists a critical piece of information that contributes to the overall accuracy of the observatory's measurements.

The instrument measures the absorption of reflected sunlight by carbon dioxide in two ranges of colors, with wavelengths centered near 1.61 and 2.06 microns. The first absorbs carbon dioxide relatively weakly, but is most sensitive to the concentration of carbon dioxide near Earth's surface. This spectral region was selected for atmospheric carbon dioxide concentration measurements because other atmospheric gases do not absorb significant energy there.

The second range of colors, which absorbs carbon dioxide more strongly, provides a totally inde-

pendent measure of atmospheric carbon dioxide abundance. That color range provides critical information about the pathway the light has taken and can detect clouds, aerosols and variations in atmospheric pressure and humidity, all of which can interfere with accurate measurements of carbon dioxide.

The third range of colors, the molecular oxygen A-band, with wavelengths centered near 0.765 microns (just beyond where the human eye is sensitive to red light), shows how much molecular oxygen is present in the light's pathway. To accurately derive the atmospheric concentration of carbon dioxide using instrument data, scientists first need to compare them to measurements of a second atmospheric gas. Because the concentration of molecular oxygen is constant, well known and uniformly distributed throughout the atmosphere, it provides an excellent reference measurement. The molecular oxygen A-band spectra can assess the effects of clouds, aerosols and surface topography that can interfere with atmospheric carbon dioxide measurements. Observations from this band are also used to infer total atmospheric surface pressure and measure the length of the path of solar light as it passes through the atmosphere.

The reflection gratings used in the observatory's spectrometers consist of a very regularly spaced series of grooves that lie on a very flat surface. A good example of how grating works can be seen by looking at the back of a compact disc under bright light. The narrow, circular tracks that record the information on the disk split light into a rainbow of different colors. The grooves in the instrument diffraction grating are very finely tuned to spread the light spectrum into a large number of very narrow wavelength bands or colors. The observatory instrument design resolves about 400 different colors in each of its three spectral ranges. In comparison, a digital camera covers the same wavelength range using just three colors.

Instrument Coverage

The observatory will orbit Earth from pole to pole every 99 minutes, continuously collecting 12 soundings per second while over the sunlit hemisphere. At this rate, the instrument will gather between 33,500 and 35,500 individual measurements over a narrow ground track each orbit. The surface footprint of each measurement has an area smaller than 3 square kilometers (just more than 1 square mile). The instrument will collect data over 14.6 of these orbit tracks every day, each spaced about 24.7 degrees of longitude (2,700 kilometers or 1,600 miles) apart at the equator. Over the course of each 16-day ground repeat cycle, it will collect about 8,000,000 measurements, with orbit tracks separated by less than 1.5 degrees longitude (170 kilometers or 100 miles) at the equator.

Compensating for Clouds, Aerosols and Topography

In order to infer the presence of sources and sinks, the light detected by the instrument must penetrate through the full height of the atmosphere. Thick clouds and aerosols (smoke, smog, and desert dust) can obscure the surface, reducing the number of measurements that can be used for full-atmospheric column estimates of carbon dioxide. In addition, large variations in surface elevation within individual soundings can also distort atmospheric carbon dioxide measurements. The Orbiting Carbon Observatory compensates for these factors by making a large number of very densely spaced measurements, each covering an area measuring about 3 square kilometers (1 square mile) when looking straight down. The instrument can gather as many as 35,500 of these soundings on the sunlit side of any Earth orbit. With measurement footprints of this size and density, the Orbiting Carbon Observatory instrument can make an adequate number of high-quality soundings, even in regions where clouds, aerosols and variations in topography are present. Existing studies suggest that at least 10 percent

of the data will be sufficiently cloud-free to yield atmospheric carbon dioxide concentration estimates with accuracies of 0.3 to 0.5 percent (1 to 2 parts per million) on regional scales at monthly intervals.

The observatory's spectrometers are designed to mitigate the effects of cloud contamination in individual soundings. The oxygen A-band and 2-micron carbon dioxide channels are extremely sensitive to clouds. In fact, the oxygen A-band channel is far more sensitive to thin clouds over continents than any other existing sensor except for the lidar on NASA's Cloud-Aerosol Lidar and Infrared Pathfinder Satellite Observation mission. Also, because the observatory makes closely-spaced soundings, the presence of small amounts of cloud contamination in a specific sounding can often be inferred from measurements made in adjacently located soundings.

Observational Modes

To enhance the quality and verify the validity of mission data, the Orbiting Carbon Observatory will collect science observations in three standard observational modes: nadir, glint and target. All three modes sample at the same rate of 12 soundings per second.

In nadir mode, the satellite points the instrument straight down to the current ground track while on the day side of Earth. Nadir mode provides the highest spatial resolution on the surface and is expected to return more usable soundings in regions that are partially cloudy or have significant surface topography. However, nadir observations may not be suitable over dark ocean surfaces or in areas covered by snow.

In glint mode, the spacecraft points the instrument toward the bright "glint" spot (the point on the surface where the sun's reflection is most intense). Glint mode observations provide up to 100 times more signal than nadir observations. Therefore, the use of glint measurements significantly improves the signal-to-noise ratio over the dark ocean. The mission plans to alternate between nadir and glint modes over each sequential 16-day global ground track repeat cycle so that the entire Earth is mapped in each mode on roughly monthly time scales.

In target-tracking mode, the observatory will lock its view onto a single specific surface location while it flies overhead. This mode allows for a more thorough analysis of the atmosphere around an individual site. A target track pass can last for up to nine minutes, during which time the observatory can acquire as many as 12,960 samples. The mission plans to conduct regular target track passes over each of the observatory's calibration sites where ground-based solar-looking Fourier Transform Spectrometers are located. Comparing space-based and ground-based measurements provides a means to identify and correct systematic and random errors in the observatory's atmospheric carbon dioxide concentration data products.

NASA's Carbon Cycle Science Program

The Orbiting Carbon Observatory is part of NASA's Carbon Cycle and Ecosystems Focus Area, which addresses the distribution and cycling of carbon among the land, ocean, and atmospheric reservoirs and ecosystems as they are affected by humans, as they change due to their own biogeochemistry, and as they interact with climate variations. The goals of the focus area are to: quantify global productivity, biomass, carbon fluxes, and changes in land cover; document and understand how the global carbon cycle, terrestrial and marine ecosystems and land cover and use are changing; and provide useful projections of future changes in global carbon cycling and terrestrial and marine ecosystems.

Throughout the next decade, research will be needed to advance our understanding of and ability to model human-ecosystems-climate interactions so that an integrated understanding of Earth system function can be applied to our goals. These research activities will yield knowledge of the Earth's ecosystems and carbon cycle, as well as projections of carbon cycle and ecosystem responses to global environmental change.

Examples of the types of forecasts that may be possible are: the outbreak and spread of harmful algal blooms, occurrence and spread of invasive exotic species and productivity of forest and agricultural systems. This Focus Area also will contribute to the improvement of climate projections for 50-100 years into the future by providing key inputs for climate models. This includes projections of future atmospheric carbon dioxide and methane concentrations and understanding of key ecosystem and carbon cycle process controls on the climate system.

Both physical and biological processes in the ocean affect the carbon cycle. In addition, physical processes influence the net production of biological oceanography.

NASA Missions to Study the Global Carbon Cycle and Climate

Over the years, several NASA missions have studied various aspects of biology and climate. These studies have been augmented by data from operational weather satellites of the National Oceanic and Atmospheric Administration.

The Landsat series of satellites, beginning in 1972, is the United States' oldest land-surface observation system. Landsat images have been used to study a wide range of processes, such as urban sprawl, deforestation, agricultural land-use trends, glaciation and volcanic activity. The latest in the series, Landsat 7, launched in April 1999, continues to provide essential land-surface data to the scientific community. The Landsat 7 system is collecting and archiving an unprecedented quantity of high-quality multispectral data each day. These new data are providing a high-resolution view of both seasonal and interannual changes in the terrestrial environment.

The launch of the Advanced Very High Resolution Radiometer on TIROS-N in 1978, and on subsequent NOAA operational satellites, permitted the global mapping of sea surface temperature and vegetation. The launch of the Coastal Zone Color Scanner on Nimbus-7, also in 1978, made mapping of oceanic chlorophyll and phytoplankton possible. The first step of photosynthesis both on land and in the oceans is the absorption of the sun's energy by the chlorophyll in leaves and phytoplankton. Scientists can measure the absorption of the sun's energy from space with satellites and consequently estimate the rates of carbon dioxide uptake by photosynthesis. Scientists at NASA's Goddard Space Flight Center produced the "First Picture of the Global Biosphere" using images from 15,000 orbits of

the NOAA-7/AVHRR (for estimating land chlorophyll) and 66,000 images from the Nimbus-7/CZCS (for estimating oceanic phytoplankton chlorophyll, referred to as “ocean color”).

The first global image of Earth’s biosphere was created by NASA scientists using ocean data from the Coastal Zone Color Scanner and land data from the Advanced Very High Resolution Radiometer. Altogether, the data took almost eight years to compile. Current satellite instruments like the Sea-viewing Wide Field-of-view Sensor and the Moderate Resolution Imaging Spectroradiometer and can produce images like this roughly once a week.

Launched in August 1997 as a successor to the Coastal Zone Color Scanner, the Sea-viewing Wide Field-of-view Sensor instrument onboard the OrbView-2 satellite acquires ocean color data to study the role of the oceans in the global carbon cycle, fluxes of trace gases at the air-sea interface and ocean primary productivity (rate of carbon fixation from the atmosphere). As was learned from the Coastal Zone Color Scanner, subtle changes in ocean color signify various types and quantities of marine phytoplankton. Ocean color data from the Sea-viewing Wide Field-of-view Sensor are helping scientists identify ocean “hot spots” of biological activity, measure global phytoplankton biomass and estimate the rate of oceanic carbon uptake. This information will yield a better understanding of the sources and sinks of the carbon cycle and the processes that shape global climate and environmental change.

Synthetic aperture radars on European, Japanese and Canadian satellites, as well as NASA’s Space Shuttle, monitor deforestation and surface hydrological states and processes. The ability of synthetic aperture radars to penetrate cloud cover and dense plant canopies make them particularly valuable in rainforest and high-latitude boreal forest studies.

With the launch of the flagship Earth Observing System satellite in 1999—Terra—NASA extended measurements of ocean color and land vegetation with advanced spaceborne instruments. Earth Observing System instruments such as the Multi-Angle Imaging SpectroRadiometer and the Moderate-Resolution Imaging SpectroRadiometer are providing global maps of surface vegetation so that scientists can model the exchange of trace gases, water and energy between vegetation and the atmosphere. The Enhanced Thematic Mapper Plus (ETM+) onboard Landsat 7 and the Advanced Spaceborne Thermal Emission and Reflection Radiometer onboard Terra are providing simultaneous multispectral, high-resolution observations of surface composition and natural hazards (volcanoes, floods, drought, etc.). In addition, the Multi-Angle Imaging SpectroRadiometer’s ability to correct land-surface images for atmospheric scattering and absorption and sun-sensor geometry will allow better calculation of vegetation properties. The Measurements of Pollution in the Troposphere instrument on Terra is providing global measurements of tropospheric methane and carbon monoxide.

New satellite sensors provide new ways of looking at Earth. In addition to measuring vegetation density, the Moderate Resolution Imaging Spectroradiometer can also measure photosynthetic activity. This provides a more accurate estimate of the amount of carbon absorbed by plants.

The measurement of land biomass by Moderate Resolution Imaging Spectroradiometer instruments on Aqua and Terra complement Orbiting Carbon Observatory measurements by documenting the surface types associated with carbon dioxide sources and sinks. Because carbon dioxide absorption is directly proportional to net ecosystem productivity, Orbiting Carbon Observatory measurements of carbon dioxide can be combined with Moderate Resolution Imaging Spectroradiometer observations to improve its estimates of this and other key land processes. Similarly, comparisons of ocean color and ocean temperature measurements from the Moderate Resolution Imaging Spectroradiometer with carbon dioxide measurements from the Orbiting Carbon Observatory will help scientists bet-

ter understand the relative roles of upwelling and local respiration on carbon dioxide emitted by the ocean.

In addition to satellite and airborne missions, NASA, along with its international partners, conducts large-scale experiments in different types of vegetation (forests, grasslands, etc.) to build a better understanding of the carbon cycle.
The Boreal Ecosystem-Atmosphere Study was a major international research program sponsored by NASA's Goddard Space Flight Center and carried out in the Canadian boreal forest. Its primary goals were to determine how the boreal forest interacts with the atmosphere (via the transfer of gases and energy), how much carbon is stored in the forest ecosystem, how climate change will affect the forest and how changes in the forest affect weather and climate. Primarily conducted from 1994-1996 (with some experiments still continuing), the study integrated ground, tower, airborne and satellite measurements of the interactions between the forest ecosystem and the lower atmosphere. The findings from the study are now being released.

The Large-Scale Biosphere-Atmosphere Experiment is an international research initiative led by Brazil. It is designed to create new knowledge needed to understand the climatological, ecological, biogeochemical and hydrological functioning of Amazonia, the impact of land-use change on these functions and the interactions between Amazonia and the Earth system. The Amazon basin contains a large store of carbon, which may be exchanged with the atmosphere through (i) changes in land use brought about by fire, clearing, logging, planting and re-growth and (ii) changes in the balance between photosynthesis and respiration occurring as a result of variations in climate and atmospheric chemistry. Both types of change introduce uncertainties in the global carbon balance.

A major challenge for research within the Large-Scale Biosphere-Atmosphere Experiment is to determine both the human management-induced components and the climate-induced components of the net flux of carbon in the Amazon Basin. Of the 100 projects within the experiment, 25 of them focus on understanding carbon exchange and storage throughout the Amazon. A new campaign was launched in 2002 to complement in situ field and space-based system observations with airborne measurements of atmospheric gases and vegetation imaging.

The Atmospheric Infrared Sounder instrument on NASA's Aqua spacecraft is providing high-quality global measurements of carbon dioxide distribution at altitudes in the mid-troposphere, between 5 and 13 kilometers (3 and 8 miles) above Earth's surface. The sounder also measures temperature, water vapor, carbon monoxide, methane and other trace gases. The sounder's carbon dioxide measurements complement those from the surface carbon dioxide network by providing global maps of carbon dioxide concentrations at altitudes where this gas makes its largest contributions to greenhouse warming. Because the sounder's measurements have little sensitivity near Earth's surface, they can not be used to locate and quantify the emission and absorption of carbon dioxide by processes there. The Orbiting Carbon Observatory will fly in formation with Aqua, allowing both spacecraft to make measurements over the same locations within about three minutes of each other. By combining simultaneous, coincident observations of the Atmospheric Infrared Sounder with the Orbiting Carbon Observatory, scientists will be able to infer the altitude distribution of carbon dioxide and improve their understanding of how it mixes vertically in the atmosphere.

The Tropospheric Emission Spectrometer instrument on NASA's Aura spacecraft measures carbon dioxide at much higher altitudes, in Earth's stratosphere. While analyses of carbon dioxide from the Tropospheric Emission Spectrometer are still in their early stages, their results will be of keen interest to the Orbiting Carbon Observatory science team.

Looking forward, the National Research Council's Earth science decadal survey report in 2007 recommended that a laser-based carbon dioxide mission be the next logical step for NASA after the Orbiting Carbon Observatory. Called the Active Sensing of Carbon Dioxide Emissions over Nights, Days and Seasons, the goal of the mission is to significantly enhance the understanding of the role of carbon dioxide in the global carbon cycle. The mission will involve an active (laser) remote sensing instrument to make measurements at high latitudes and at night, where the Orbiting Carbon Observatory can not make measurements because it relies on reflected sunlight.

This goal is addressed through three science objectives: quantifying the global spatial distribution of atmospheric carbon dioxide on scales of weather models in the 2010-2020 era; quantifying current global spatial distribution of terrestrial and oceanic sources and sinks of carbon dioxide on one-degree grids at weekly resolution; and providing a scientific basis for future projections of carbon dioxide sources and sinks through data-based process Earth system model enhancements. This mission will directly benefit from the data assimilation procedures and calibration and validation infrastructure that will handle Orbiting Carbon Observatory data. The National Research Council recommended that the mission be launched in the 2013-2016 timeframe at the latest, in order to overlap the new measurements with those of the Orbiting Carbon Observatory.

Collectively, the resulting accurate, self-consistent and long-term data sets from these NASA missions and campaigns are expected to lead to major advances in our understanding of the role of the global biosphere in climate change.

Program/Project Management

The Orbiting Carbon Observatory mission is managed for NASA's Science Mission Directorate, Washington, by NASA's Jet Propulsion Laboratory (JPL), Pasadena, Calif.

At NASA Headquarters, Edward Weiler is the associate administrator for the Science Mission Directorate. Charles J. Gay is deputy associate administrator for the Science Mission Directorate. Mike Freilich is the Earth science division director within the Science Mission Directorate. Jack Kaye is associate director for research within the Earth science division. Eric Ianson is the Orbiting Carbon Observatory program executive. Ken Jucks is the Orbiting Carbon Observatory program scientist.

The Orbiting Carbon Observatory mission is led by principal investigator David Crisp of JPL. Charles Miller of JPL is the mission's deputy principal investigator. Crisp has delegated implementation responsibility for the mission to JPL. In this capacity, JPL is responsible for overall project management, system engineering management, mission design, instrument integration and test, mission assurance management, mission operations management and the ground data system.

At JPL, Tom Livermore is the Orbiting Carbon Observatory project manager, and Ralph Basilio is the Orbiting Carbon Observatory deputy project manager. The California Institute of Technology, Pasadena, Calif., manages JPL for NASA.

At NASA's Kennedy Space Center, the NASA Launch Services Program is responsible for government oversight of launch vehicle preparations at Vandenberg; the engineering, certification and testing of the Taurus XL 3110 launch vehicle; spacecraft ground support and integration with the Taurus XL 3110; the Space Launch Complex 576-E pad facilities; countdown management; launch vehicle tracking; data acquisition; and telemetry monitoring.

12-29-08