National Aeronautics and Space Administration

STS-126
Extreme Home Improvements

www.nasa.gov

United Space Alliance

CONTENTS

Section	Page
STS-126 MISSION OVERVIEW	1
TIMELINE OVERVIEW	9
MISSION PROFILE	13
MISSION PRIORITIES	15
MISSION PERSONNEL	17
STS-126 ENDEAVOUR CREW	19
PAYLOAD OVERVIEW	29
MULTI-PURPOSE LOGISTICS MODULE	29
RENDEZVOUS AND DOCKING	35
UNDOCKING, SEPARATION AND DEPARTURE	36
ENVIRONMENTAL CONTROL AND LIFE SUPPORT SYSTEM (ECLSS)	39
SOLAR ALPHA ROTARY JOINT (SARJ)	47
SPACEWALKS	55
EXPERIMENTS	63
DETAILED TEST OBJECTIVES	63
SHORT-DURATION U.S. INTEGRATED RESEARCH TO BE COMPLETED DURING STS-126/ULF2	65
ADVANCED RESISTIVE EXERCISE DEVICE	73
SHUTTLE REFERENCE DATA	77

Section | Page

LAUNCH AND LANDING 95
LAUNCH 95
ABORT-TO-ORBIT 95
TRANSATLANTIC ABORT LANDING 95
RETURN-TO-LAUNCH-SITE 95
ABORT ONCE AROUND 95
LANDING 95
ACRONYMS AND ABBREVIATIONS 97
MEDIA ASSISTANCE 109
PUBLIC AFFAIRS CONTACTS 111

STS-126 MISSION OVERVIEW

The STS-126 crew members take a break during a training session at NASA's Johnson Space Center. From the left are astronauts Heidemarie Stefanyshyn-Piper, Shane Kimbrough, both mission specialists; Eric Boe, pilot; Chris Ferguson, commander; Steve Bowen, Sandra Magnus and Donald Pettit, all mission specialists.

When the fourth space shuttle mission of the year is complete, the International Space Station will have all of the key systems needed to turn what is now a three-bedroom, one-bathroom home for three into a five-bedroom, two-bath residence for six.

Space shuttle Endeavour, commanded by veteran space flier Navy Capt. Chris Ferguson, 47, is scheduled to launch at 7:55 p.m. EST on Nov. 14 and arrive at the space station two days later. The shuttle and station crews will collaborate on the delivery of key life support

and habitability systems that will enable long-term, self-sustaining station operations after the shuttle fleet is retired.

The crew will conduct four spacewalks to service and lubricate the complex's two Solar Alpha Rotary Joints (SARJ) that allow the station's photovoltaic cells to revolve like paddlewheels and point at the sun. The starboard SARJ has had limited use since September 2007. The spacewalkers also will install a new nitrogen tank, a global positioning system, antenna, and a camera on the station's Integrated Truss Assembly.

Astronauts Sandra Magnus (foreground), Expedition 18/19 flight engineer; Shane Kimbrough and Heidemarie Stefanyshyn-Piper, both STS-126 mission specialists, give a "thumbs-up" signal during a training session in one of the full-scale trainers in the Space Vehicle Mockup Facility at Johnson Space Center.

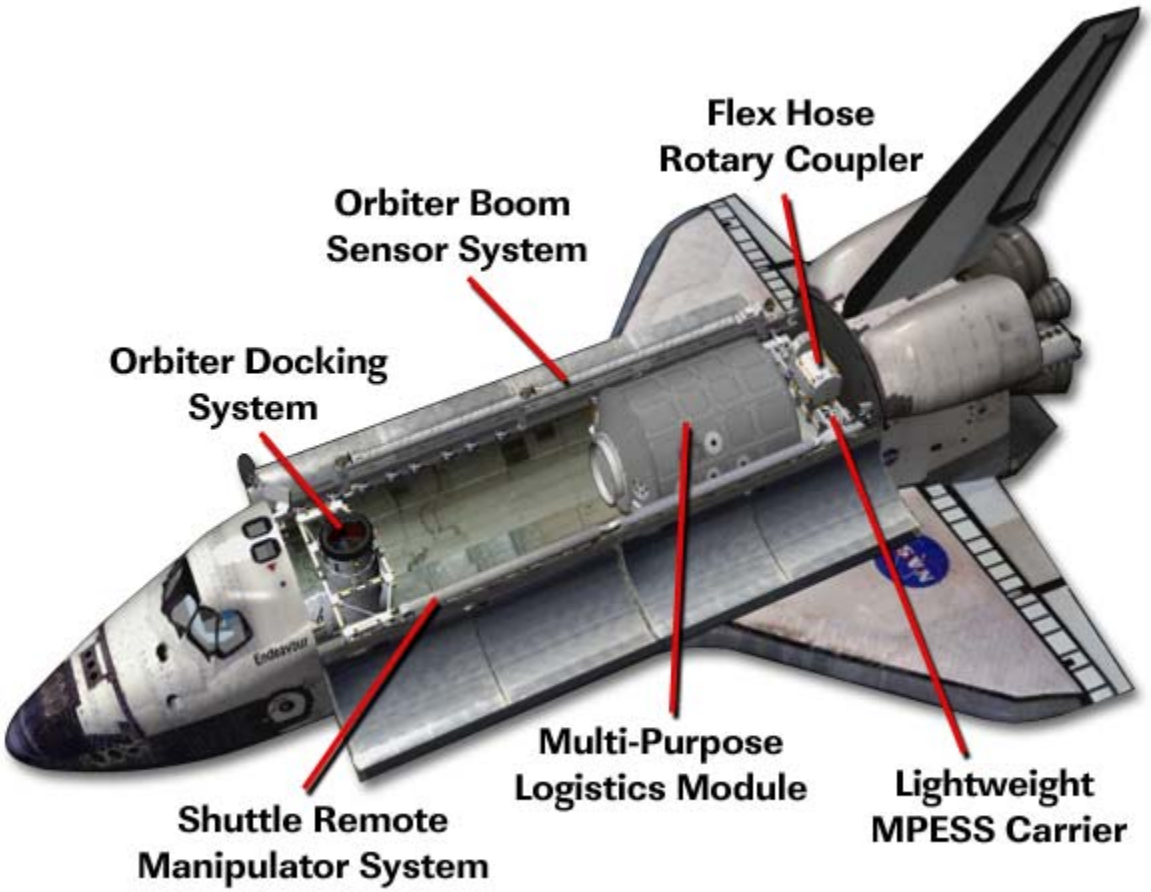

This graphic depicts the location of the STS-126 payload hardware.

The shuttle will deliver a new flight engineer, Sandra Magnus, 44, to join the Expedition 18 crew, and return Flight Engineer Greg Chamitoff (SHAM-eh-tawf), 45, to Earth. Air Force Col. Eric A. Boe, 44, will serve as Endeavour's pilot. The mission specialists are Navy Capt. Steve Bowen, 44; Army Lt. Col. Shane Kimbrough (KIM-bro), 41; Navy Capt. Heidemarie Stefanyshyn-Piper (stef-uh-NIH-shun PIE-pur), 45; Donald Pettit, 53; and Magnus. STS-126 will be the second spaceflight for Ferguson and Piper, who flew together on STS-115 in September 2006, and for Pettit, who spent six months aboard the station in 2002-2003.

Endeavour will carry an Italian-built reusable logistics module named Leonardo, which will deliver 14,416 pounds of supplies and equipment, including an advanced resistive exercise device, a second toilet, a galley, two sleep stations and a water-recycling plumbing system that will be integrated into the station's regenerative life support system. Leonardo will return to Earth aboard Endeavour at the conclusion of STS-126, bringing home an estimated 3,441 pounds of equipment and scientific samples from station research.

A few hours after Endeavour's docking on the third day of the flight, Magnus and Chamitoff

will exchange custom-made Russian Soyuz spacecraft seat liners. With that exchange, Magnus will become a part of the Expedition 18 space station crew, and Chamitoff will become part of Endeavour's crew.

Magnus will join Expedition Commander and Air Force Col. E. Michael Fincke and Flight Engineer Cosmonaut Yury Lonchakov, a colonel in the Russian Air Force, who were launched to the complex in the Soyuz TMA-13 spacecraft on Oct. 12 from the Baikonur Cosmodrome in Kazakhstan. In the spring, Magnus will return to Earth on shuttle mission STS-119, while Fincke and Lonchakov will return in the Soyuz.

After launch, Endeavour's thermal protection heat shield will be inspected, using the standard procedures. However, once Endeavour is docked to the station and the Multipurpose Logistics Module is installed at its Harmony common berthing port, any focused inspections of the shuttle's starboard wing would require a hand-off of the Orbiter Boom Sensor System (OBSS) from the shuttle's robotic arm to the station's arm. The OBSS uses laser devices and cameras to map the shuttle's wings and nose cap.

Ferguson will be at Endeavour's aft flight deck controls on the third day as the shuttle approaches the station for docking. Flying just 600 feet below the complex, Endeavour will execute a slow rotational back flip maneuver, presenting its belly and other areas of its heat protective tiles to station residents Fincke and Chamitoff, who will use digital cameras equipped with 400 and 800 millimeter lenses to acquire detailed imagery.

Endeavour is scheduled to dock to the forward docking port at the end of the station's Harmony module at 4:56 p.m. EST Nov. 16. About two hours later, hatches will be opened between the two spacecraft to allow the 10 crew members to greet one another for the start of nine days of joint operations.

Following a standard safety briefing by station Commander Fincke, the crews will exchange Magnus for Chamitoff as the new station crew member, prepare for the next day's spacewalk, and activate a Station-to-Shuttle Power Transfer System to provide additional electricity for the longer operation of shuttle systems.

The night before the first spacewalk, Piper and Bowen will move into the Quest airlock for the overnight "campout." The "campout" helps to purge nitrogen from their bloodstreams, preventing decompression sickness once they move out into the vacuum of space. Piper, who conducted two spacewalks on STS-115, will be designated EV 1, or extravehicular crew member 1. She will wear the suit bearing the solid red stripes for the spacewalks that will be conducted on flight days 5, 7 and 9. Bowen will be performing his first spacewalks as extravehicular crew member 2 and will wear the solid white suit on flight days 5, 9 and 11. Kimbrough will serve as extravehicular crew member 3 and will wear the suit with broken red and white stripes on flight days 7 and 11. The spacewalkers will repeat the "campout" preparations the nights before the second, third and fourth spacewalks.

Astronaut Steve Bowen, STS-126 mission specialist, participates in an Extravehicular Mobility Unit (EMU) spacesuit fit check in the Space Station Airlock Test Article (SSATA) in the Crew Systems Laboratory at NASA's Johnson Space Center. Astronaut Shane Kimbrough, mission specialist, assisted Bowen.

On the fifth day of the flight, Piper and Bowen will begin the first spacewalk by replacing a depleted nitrogen tank and a device used to help coolant flow along the truss, the backbone of the station. They will get help from Pettit and Magnus, who will operate the station's robotic arm, plucking the new tank and Flex Hose Rotary Coupler (FHRC) from Endeavour's Lightweight Mission Peculiar Equipment Support Structure Carrier (LMC) and positioning them for the spacewalkers. Piper and Bowen will remove the old units and secure them for return to Earth. Piper and Bowen also will remove covers from the front of the Japanese Kibo (in English, "Hope") module to prepare for the installation of the module's exposed facility during the STS-127 mission in 2009. The pair also will begin inspecting, cleaning and lubricating the starboard SARJ race ring and replacing 11 of its 12 trundle bearings. One trundle bearing was replaced on STS-124 in June. The bearings will be returned to Earth for inspection and additional failure analysis.

On flight day seven, Piper and Kimbrough will relocate two Crew Equipment Translation Aid (CETA) carts, setting the stage for the

relocation of External Stowage Platform 3. The spacewalkers also will lubricate the end effector, or hand, on the one end of Canadarm2, the station's robotic arm. There are two such Latching End Effectors, one on each end of the arm, which allow it to move about the station and maneuver equipment for assembly and maintenance. Piper and Kimbrough will wrap up the spacewalk with additional lubrication and trundle bearing replacement on the starboard SARJ.

On flight day nine, Piper and Bowen will devote their entire spacewalk to additional cleaning, lubricating and replacement of starboard SARJ trundle bearings.

The final spacewalk of the mission is scheduled for flight day 11. Bowen and Kimbrough will team up to remove a multi-layer insulation blanket from Kibo. Kimbrough then will move to the opposite end of the station's truss to lubricate the port SARJ. Bowen will install a protective cover on Kibo's berthing mechanism, where its External Facility Berthing Mechanism will be connected. Bowen also will install a handrail and a Global Positioning System antenna on Kibo's logistics module and a new television camera on the truss. Kimbrough will replace insulation on several cooling loops on the port truss. At the end of the spacewalk, both will perform any get-ahead tasks time will allow.

On flight day 12, the crew will complete the transfer of equipment and supplies from Leonardo and the space shuttle's middeck to the station. They then will button up Leonardo for its move back to Endeavour's payload bay on the following day and transfer spacewalk equipment and two spacesuits back to Endeavour.

On flight day 13, Endeavour's crew will take half the day off while the expedition crews continue handover discussions.

Endeavour is scheduled to undock from the station at 10:31 a.m. EST on Thanksgiving Day, flight day 14. Boe, flying the shuttle from the aft flight deck, will guide the orbiter on a fly around of the complex so the crew can capture detailed imagery of the station's configuration. Once Endeavour's maneuvering jets are fired to separate it from the station, Boe, Pettit and Kimbrough will take turns manipulating the shuttle's robotic arm and the OBSS to conduct a "late" inspection of the shuttle's heat shield, a final opportunity to confirm Endeavour's readiness to return to Earth.

On flight day 15, Ferguson, Boe and Pettit also will conduct the traditional checkout of the orbiter's flight control surfaces and steering jets in preparation for landing the next day. The shuttle crew will stow equipment and supplies that were used during the mission, berth the OBSS onto the right-hand sill of the payload bay, and shut down the shuttle's robotic arm systems for the remainder of the mission. The entire crew will conduct a review of landing procedures.

Boe and Kimbrough will spring-deploy a small satellite, the Picosat Solar Cell (PSSC) Experiment, from the shuttle cargo bay after undocking from the station. The 5-by-10-inch satellite, a Department of Defense Space Test Program experiment sponsored by the Air Force Research Laboratory and The Aerospace Corp., will test two types of new solar cells in the harsh space environment. The performance of the solar cells and their degradation over time will be recorded and used to determine their flight worthiness.

ISS016E032596

Backdropped by a blue and white Earth, space shuttle Endeavour approaches the International Space Station during STS-123 rendezvous and docking operations in March 2008.

On flight day 16, the crew will stow any remaining equipment, and Chamitoff will set up a special "recumbent" seat in the middeck to assist him as he readapts to Earth's gravity following three months of weightlessness.

Endeavour is scheduled to return to Earth on Saturday, Nov. 29, at 2 p.m. EST, landing at NASA's Kennedy Space Center in Florida, and bringing to an end its 22nd mission, the 27th shuttle flight to the International Space Station and the 124th flight in shuttle program history.

Astronaut Chris Ferguson (right), STS-126 commander, briefs his crew in preparation for a training session. From the left are astronauts Donald Pettit, Shane Kimbrough, Steve Bowen, Heidemarie Stefanyshyn-Piper, all mission specialists; Sandra Magnus, Expedition 18/19 flight engineer; and Eric Boe, pilot.

TIMELINE OVERVIEW

Flight Day 1

- Launch
- Payload Bay Door Opening
- Ku-Band Antenna Deployment
- Shuttle Robotic Arm Activation
- Umbilical Well and Handheld External Tank Photo Downlink

Flight Day 2

- Endeavour Thermal Protection System Survey with Shuttle Robotic Arm/Orbiter Boom Sensor System (OBSS)
- Extravehicular Mobility Unit Checkout
- Centerline Camera Installation
- Orbiter Docking System Ring Extension
- Orbital Maneuvering System Pod Survey
- Rendezvous Tools Checkout

Flight Day 3

- Rendezvous with the International Space Station
- Rendezvous Pitch Maneuver Photography by the Expedition 18 Crew
- Docking to Harmony/Pressurized Mating Adapter-2
- Hatch Opening and Welcoming
- Magnus and Chamitoff Exchange Soyuz Seatliners; Magnus Joins Expedition 18, Chamitoff Joins the STS-126 Crew
- OBSS Handoff from Canadarm2 to Shuttle Robotic Arm

Flight Day 4

- Canadarm2 Grapple and Unberthing of Leonardo Multi-Purpose Logistics Module (MPLM) from Endeavour's cargo bay
- Installation of Leonardo MPLM onto Nadir Port of Harmony/Node 2
- Shuttle/ISS Transfers
- Leonardo MPLM Ingress
- EVA 1 Procedure Review
- EVA 1 Campout by Piper and Bowen

Flight Day 5

- EVA Preparations
- EVA 1 by Piper and Bowen (Nitrogen Tank Assembly replacement, assorted station assembly tasks, start of cleaning and lubrication of starboard Solar Alpha Rotary Joint)
- Shuttle/ISS Transfers

Flight Day 6

- Start of Installation of New Environmental Systems and Crew Habitability Equipment for Six-Person Crew
- Shuttle Robotic Arm/OBSS Focused Inspection of Endeavour's Thermal Protection System, if Required
- Shuttle/ISS Transfers
- EVA 2 Procedure Review
- EVA 2 Campout by Piper and Kimbrough

Flight Day 7

- EVA Preparations
- EVA 2 by Piper and Kimbrough (Crew and Equipment Translation Aid (CETA) Cart Relocation, lubrication of Canadarm2 end effector, continuation of cleaning and lubrication of starboard Solar Alpha Rotary Joint)
- GPS Antenna Assembly
- Shuttle/ISS Transfers

Flight Day 8

- Kibo Experiment Facility Berthing Mechanism Checkout
- Camera System Assembly
- Joint Crew News Conference
- Crew Off Duty Time
- Shuttle/ISS Transfers
- EVA 3 Procedure Review
- EVA 3 Campout by Piper and Bowen

Flight Day 9

- EVA Preparations
- EVA 3 by Piper and Bowen (continuation of cleaning and lubrication of starboard Solar Alpha Rotary Joint)
- Shuttle/ISS Transfers

Flight Day 10

- Crew Off Duty Period
- Shuttle/ISS Transfers
- EVA 4 Procedure Review
- EVA 4 Campout by Bowen and Kimbrough

Flight Day 11

- EVA Preparations
- EVA 4 by Bowen and Kimbrough (Thermal cover removal from Kibo module, lubrication of port Solar Alpha Rotary Joint, installation of GPS antenna on Kibo, thermal cover removal from P3 truss, installation of camera system on truss)
- Shuttle/ISS Transfers

Flight Day 12

- Final Shuttle/ISS Transfers
- Leonardo MPLM Egress and Depressurization
- Canadarm2 Removal of Leonardo MPLM from Harmony/Node 2 and Berthing in Endeavour's Cargo Bay

Flight Day 13

- Crew Off Duty Time
- Rendezvous Tool Checkout
- Final Farewells and Hatch Closure
- Centerline Camera Installation

Flight Day 14

- Undocking
- Flyaround of the International Space Station
- Final Separation
- OBSS Late Inspection of Endeavour's Thermal Protection System

Flight Day 15

- Flight Control System Checkout
- Reaction Control System Hot-Fire Test
- Picosat Deployment
- Cabin Stowage
- Chamitoff's Recumbent Seat Set Up
- Crew Deorbit Briefing
- Ku-Band Antenna Stowage

Flight Day 16

- Deorbit Preparations
- Payload Bay Door Closing
- Deorbit Burn
- NASA's Kennedy Space Center Landing

This page intentionally blank

MISSION PROFILE

CREW

Commander:	Chris Ferguson
Pilot:	Eric Boe
Mission Specialist 1:	Donald Pettit
Mission Specialist 2:	Steve Bowen
Mission Specialist 3:	Heidemarie Stefanyshyn-Piper
Mission Specialist 4:	Shane Kimbrough
Mission Specialist 5:	Sandra Magnus (up)
Mission Specialist 6:	Greg Chamitoff (down)

LAUNCH

Orbiter:	Endeavour (OV-105)
Launch Site:	Kennedy Space Center Launch Pad 39A
Launch Date:	Nov. 14, 2008
Launch Time:	7:55 p.m. EST (Preferred In-Plane launch time for 11/14)
Launch Window:	5 minutes
Altitude:	122 Nautical Miles (140.4 miles) Orbital Insertion; 190 nautical miles (218.6 miles) ISS rendezvous altitude
Inclination:	51.6 Degrees
Duration:	14 Days 18 Hours 5 Minutes

VEHICLE DATA

Shuttle Liftoff Weight:	4,523,132 pounds
Orbiter/Payload Liftoff Weight:	266,894 pounds
Orbiter/Payload Landing Weight:	223,422 pounds
Software Version:	OI-33

Space Shuttle Main Engines:

SSME 1:	2047
SSME 2:	2052
SSME 3:	2054
External Tank:	ET-129
SRB Set:	BI-136
RSRM Set:	104

SHUTTLE ABORTS

Abort Landing Sites

RTLS:	Kennedy Space Center Shuttle Landing Facility
TAL:	Primary – Zaragoza
AOA:	Primary – Kennedy Space Center

LANDING

Landing Date:	Nov. 29, 2008
Landing Time:	2 p.m. EST
Primary landing Site:	Kennedy Space Center Shuttle Landing Facility

PAYLOADS

27th station flight (ULF2), Multi-Purpose Logistics Module (MPLM)

This page intentionally blank

MISSION PRIORITIES

1. Dock Endeavour to Pressurized Mating Adapter-2 and perform mandatory safety briefing for all crew members

2. Rotate Expedition 17/18 Flight Engineer and NASA Science Officer Greg Chamitoff with Expedition 18 Flight Engineer and NASA Science Officer Sandra Magnus

3. Berth, activate and check out Multi-Purpose Logistics Module (MPLM) Leonardo using the space station's robotic arm

4. Perform MPLM Passive Common Berthing Mechanism (PCBM) sealing surface inspection

5. Transfer mandatory quantities of water from Endeavour to the International Space Station

6. Transfer critical items per Utilization Logistics Flight-2 transfer priority list

7. Return MPLM to the shuttle cargo bay

8. Transfer and install space station MPLM items/racks to the space station:

   – Water Recovery System (WRS) 1 to Destiny laboratory, WRS 2 to Destiny laboratory, Waste and Hygiene Compartment (WHC) to Destiny laboratory

   – Relocate cycle ergometer with vibration isolation and stabilization (CEVIS) using the CEVIS relocation adaptation bracket hardware to accommodate the installation of the WHC

   – Expedite the Processing of Experiments to Space Station rack No. 6 (includes galley) to Destiny laboratory

   – Zero-gravity Stowage Rack (ZSR) to Columbus laboratory

   – Crew quarters to Harmony module

   – Advanced Resistive Exercise Device to space station temp stow

   – Crew Health Care System 2 (ZSR) to Kibo laboratory

   – Combustion Integration Rack Passive Rack Isolation System to Destiny laboratory

   – ZSR to Kibo laboratory

9. Transfer flex hose rotary coupler from the Lightweight Multi-Purpose Experiment Support Structure Carrier (LMC) to the External Stowage Platform (ESP) 3

10. Return empty nitrogen tank assembly flight support equipment from the ESP 3 to the LMC

11. Relocate two Crew and Equipment Translation Aid (CETA) carts from starboard-starboard to port-port

12. Perform starboard Solar Alpha Rotary Joint (SARJ) activities

13. Perform minimum crew handover of 12 hours per rotating crew member (including crew safety handover)

14. Transfer additional cargo items

15. Install and return respiratory support packs and radiation area monitors
16. Perform space station daily payload status checks as required
17. Perform assembly and activation of six-person crew system hardware
18. Remove WRS launch restraint and install Orbital Replacement Unit
19. Perform space station payload research operations tasks, sortie experiment activities and short-duration bioastronautics investigations
20. Deploy pico-satellite solar cell experiment
21. Transfer and install Harmony resupply stowage to MPLM for return
22. Perform external facility berthing mechanism activities
23. Install/remove Antimicrobial Applicator (AmiA) in the Japanese Experiment Module
24. Remove failed Columbus return fan assembly for return

MISSION PERSONNEL

KEY CONSOLE POSITIONS FOR STS-126 (ENDEAVOUR)

	Flt. Director	CAPCOM	PAO
Ascent	Bryan Lunney	Alan Poindexter Greg (Box) Johnson (Weather)	Kelly Humphries
Orbit 1 (Lead)	Mike Sarafin	Steve Robinson	Kelly Humphries (Lead)
Orbit 2	Tony Ceccacci (FD 1-12) Paul Dye (FD 13-EOM)	Jim Dutton	Brandi Dean
Planning	Paul Dye (FD 1-3) Kwatsi Alibaruho (FD 4-EOM)	Shannon Lucid	John Ira Petty
Entry	Bryan Lunney	Alan Poindexter Greg (Box) Johnson (Weather)	Kelly Humphries
Shuttle Team 4	Richard Jones	N/A	N/A
ISS Orbit 1	Holly Ridings	Terry Virts	N/A
ISS Orbit 2 (Lead)	Ginger Kerrick	Mark Vande Hei	N/A
ISS Orbit 3	Brian Smith	Robert Hanley	N/A
Station Team 4	Courtenay McMillan		

HQ PAO Representative at KSC for Launch – John Yembrick

JSC PAO Representative at KSC for Launch – Nicole Cloutier

KSC Launch Commentator – Candrea Thomas

KSC Launch Director – Mike Leinbach

NASA Launch Test Director – Charlie Blackwell-Thompson

This page intentionally blank

STS-126 ENDEAVOUR CREW

The STS-126 patch represents space shuttle Endeavour on its mission to help complete the assembly of the International Space Station (ISS). The inner patch outline depicts the Multi-Purpose Logistics Module (MPLM) Leonardo. This reusable logistics module will carry the equipment necessary to sustain a crew of six onboard the station and will include additional crew quarters, exercise equipment, galley, and life support equipment.

In addition, a single expedition crew member will launch on STS-126 to remain on the space station, replacing an expedition crew member who will return home with the shuttle crew. Near the center of the patch, the constellation Orion reflects the goals of the human spaceflight program to return us to the moon and prepare us for journeys to Mars. The moon and the Red Planet are also shown. At the top of the patch is the gold symbol of the astronaut office. The sunburst, just clearing the horizon of the magnificent Earth, powers all these efforts through the solar arrays of the space station orbiting high above.

The STS-126 crew members take a break during a training session at NASA's Johnson Space Center. From the left are astronauts Heidemarie Stefanyshyn-Piper, Shane Kimbrough, both mission specialists; Eric Boe, pilot; Chris Ferguson, commander; Steve Bowen, Sandra Magnus and Donald Pettit, all mission specialists.

Short biographical sketches of the crew follow with detailed background available at: http://www.jsc.nasa.gov/Bios/

STS-126 CREW BIOGRAPHIES

Chris Ferguson

Navy Capt. Chris Ferguson will lead the crew of STS-126 on the 27th shuttle mission to the International Space Station. Ferguson served as the pilot of STS-115 in 2007 and has logged more than 12 days in space. He has overall responsibility for the execution of the mission, orbiter systems operations and flight operations, including landing. In addition, Ferguson will fly the shuttle in a procedure called the rendezvous pitch maneuver while Endeavour is 600 feet below the complex to enable the station crew to photograph the shuttle's heat shield. He then will dock Endeavour to the station.

Eric Boe

Air Force Col. Eric Boe will serve as the pilot for the 15-day mission. He has more than 4,000 flight hours in more than 45 different aircraft. STS-126 will be his first spaceflight. Since selection as an astronaut in 2000, Boe has served as the director of operations at the Gagarin Cosmonaut Training Center in Star City, Russia, and worked on the new Ares I crew launch vehicle and Orion crew exploration vehicle. During the mission, Boe will be responsible for orbiter systems operations and shuttle robotic arm operations and will aid Ferguson in the rendezvous and docking with the station. Boe will fly Endeavour around the station at the end of the joint mission.

Donald Pettit

Veteran astronaut Donald Pettit will make his second spaceflight as mission specialist 1 on STS-126. Pettit, who holds a doctorate in chemical engineering, has more than five and a half months of spaceflight experience. He served as a flight engineer during Expedition 6 on the International Space Station. As part of his long-duration mission, he performed two spacewalks. His role on this shuttle mission will include operating the shuttle robotic arm and serving as the lead for the transfer of cargo from the shuttle to the station.

Steve Bowen

Navy Capt. Steve Bowen will be making his first spaceflight as mission specialist 2 on STS-126. Bowen is the first submarine officer selected by NASA as an astronaut. He joined the astronaut corps in 2000 and served technical duties in the space station operations branch. For this mission, he will conduct three spacewalks to replace a nitrogen tank, clean the solar alpha rotary joint and replace trundle bearing assemblies.

Heidemarie Stefanyshyn-Piper

Navy Capt. Heidemarie Stefanyshyn-Piper will be on her second spaceflight. She served as a mission specialist on STS-115, logging more than 12 days in space. She also completed two spacewalks on her first mission. She serves as the lead spacewalker for this mission and is scheduled to perform three spacewalks.

Shane Kimbrough

Army Lt. Col. Shane Kimbrough will serve as mission specialist 4 for his first spaceflight mission. Kimbrough first worked for the NASA team as part of the Aircraft Operations Division at Ellington Field in Houston, where he served as a flight simulation engineer on the Shuttle Training Aircraft. He was selected as an astronaut in 2004. Kimbrough will perform two spacewalks during the mission.

Sandra Magnus

Astronaut Sandra Magnus will be making her second flight to space on STS-126, her ride for a longer mission on the space station. Magnus, who holds a doctorate from the Georgia Institute of Technology, first flew as a mission specialist aboard STS-112 in 2002. On that mission, she acquired nearly 11 days of spaceflight experience. Following that flight, she was assigned to work with the Canadian Space Agency to prepare Dextre, the Special Dexterous Manipulator robot, for installation on the space station. Magnus is scheduled to return to Earth on STS-119.

Greg Chamitoff

Astronaut Greg Chamitoff is serving as flight engineer and NASA science officer of the Expedition 18 crew on the space station. Chamitoff, who is on his first spaceflight, rode to the station as part of the STS-124 crew and will have accrued nearly six months in space when STS-126 arrives. He holds a doctorate in aeronautics and astronautics. Selected by NASA in 1998, Chamitoff has worked in the astronaut office robotics branch, was the lead CAPCOM for Expedition 9 and was a crew support astronaut for Expedition 6. Chamitoff served as an aquanaut for nine days as part of the third NEEMO mission in 2002.

PAYLOAD OVERVIEW

In the Space Station Processing Facility at NASA's Kennedy Space Center in Florida, Boeing technicians prepare to close the hatch on the Multi-Purpose Logistics Module Leonardo. The module is the payload for space shuttle Endeavour's STS-126 mission to the International Space Station. Photo courtesy of NASA.

MULTI-PURPOSE LOGISTICS MODULE

Leonardo Makes Fifth Voyage to the International Space Station

The primary goal of the STS-126/ULF2 mission is to provide additional capability for the International Space Station to house astronauts and to increase the station crew size from three to the desired six crew members by spring 2009.

Leonardo, a large cargo container inside Endeavour's payload bay, will bring supplies and equipment to the International Space Station to help prepare the outpost for a six-member crew. The supplies include replacement Trundle Bearing Assemblies (TBAs) for the station's ailing Starboard Solar Alpha Rotary Joint (SARJ). In all, more than 1,000 items will be delivered in the Multi-Purpose Logistics Module (MPLM).

Leonardo is one of three differently named large, reusable pressurized MPLMs used to ferry cargo back and forth to the station. Including STS-126, the MPLMs have flown eight times since 2001. Leonardo was the first

MPLM to deliver supplies to the station and STS-126 is its fifth flight. The cylindrical modules include components that provide life support, fire detection and suppression, electrical distribution and computers when attached to the station.

Leonardo Specifications	
Dimensions:	Length: 21 feet Diameter: 15 feet Weighs: 4.5 tons
Payload Mass:	27,899 lbs

The Italian-built, U.S.-owned logistics modules are capable of carrying more than 7.5 tons (15,000 pounds) of cargo, spares and supplies, the equivalent of a semi-truck trailer. The modules bring equipment to and from the space station, such as container racks with science equipment, science experiments from NASA and its international partners, spare parts, and other hardware items for return, such as completed experiments, system racks, space station hardware that needs repair and refuse. Some of the items are intended for disposal on Earth, while others are for analysis and data collection by hardware providers and scientists. In addition to Leonardo, Endeavour will carry the Lightweight Multi-Purpose Experiment Support Structure Carrier and a spare Flex Hose Rotary Coupler Unit (FHRC) for a future replacement spare. The shuttle will return a depleted Nitrogen Tank Assembly (NTA), which will be refilled and sent back to the station in 2010. The FHRC provides two isolated paths for distribution of ammonia between the space station radiators and the rest of the station. The NTA provides a high-pressure gaseous nitrogen supply to control the flow of ammonia out of the Ammonia Tank Assembly (ATA).

Carrying 16 system and cargo racks, Leonardo will fly with modifications that will allow 12 additional cargo bags the size of carry-on suitcases to be flown inside the module's rear end cone.

Foot Restraint Assembly.
Two additional foot restraints will be flown on Leonardo to elevate shorter crew members.

The above image is a crew quarter rack. Similar equipment will be carried to the space station on STS-126.

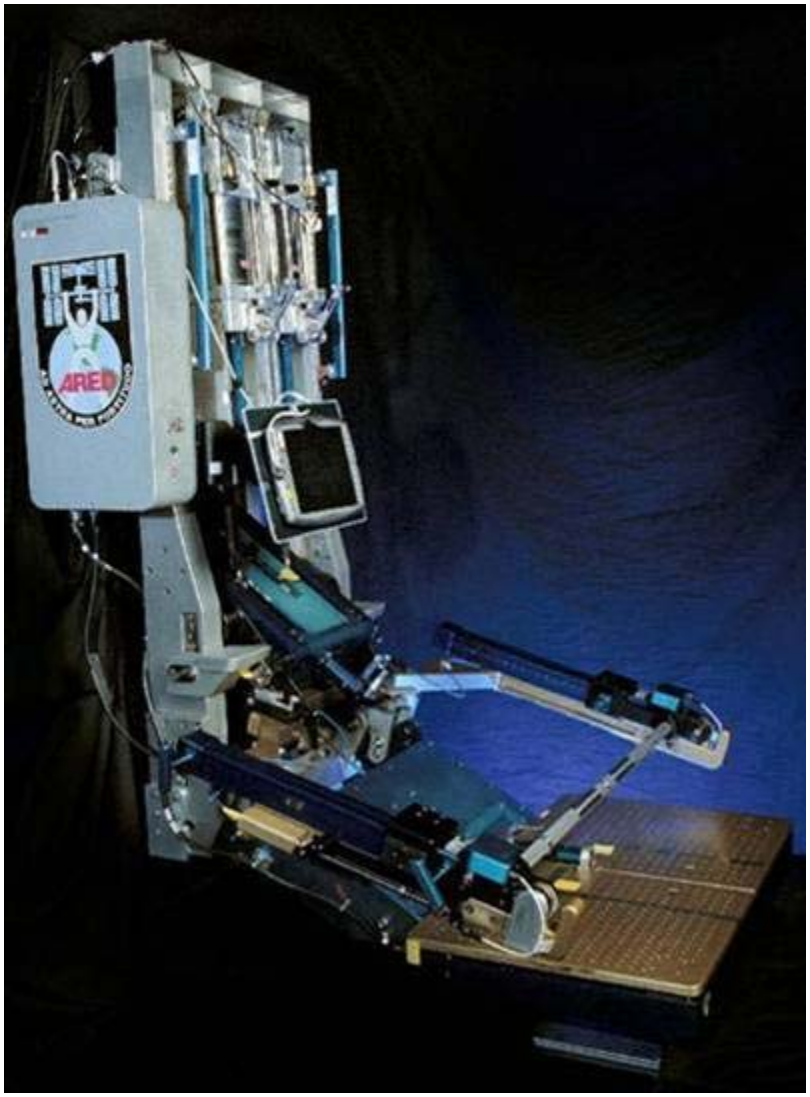

The above image is the advanced Resistive Exercise Device, designated aRED.

Leonardo will carry two crew quarters racks that will be installed inside the Harmony node, an advanced Resistive Exercise Device, designated aRED, two Water Reclamation Racks that will recycle urine into potable water, a Combustion Integration Rack that will analyze the physics of combustible gases, a Waste and Hygiene Compartment (WHC) rack including a toilet, a galley that will be located in the U.S. Destiny laboratory, three Zero-Gravity storage racks for stowage of large quantities of hardware, four handrail extender assemblies to increase crew members' mobility as they float about the station, an antimicrobial applicator to remove bacteria from cooling and fluid lines, and two additional foot restraints to elevate shorter crew members.

Also included in Leonardo is the General Laboratory Active Cryogenic ISS Experiment Refrigerator, or GLACIER, a double locker cryogenic freezer for transporting and

preserving science experiments that will remain in orbit at the end of the mission. The freezer provides thermal control between +4° Celsius and -160° Celsius and can operate in both the space shuttle's middeck and the EXPRESS Rack in orbit. The EXPRESS Rack system supports science payloads in several disciplines, such as biology, chemistry, physics, ecology and medicine, including commercial activities. In the active mode, GLACIER can be transported in the middeck, but for passive transport, it is flown in the logistics module. Additionally, an incubator/refrigerator, the Microgravity Experiment Research Locker Incubator, or MERLIN, will fly in the MPLM. Though originally used for thermal control of scientific experiments, it will remain on the outpost and be used to store drinking beverages and food for a six-member station crew.

Spare parts that are being transported include 11 SARJ trundle bearing assemblies that lubricate and allow the giant rotary joint to turn the Starboard 4 and Starboard 6 Solar Array Wings, a new ISS External Television camera that will be installed during the mission's fourth spacewalk, two hydrogen sensor units for detecting cross-contamination in the station's Oxygen Generation System, and two crew headsets with cabling and controls for improved space-to-ground and crew-to-crew communications.

The rear end cone section where the 12 additional bags will be located was redesigned to allow the MPLM to carry up to an additional 480 to 600 pounds of cargo. The redesign created a structural support rack, like the cargo rack on top of vans and sport utility vehicles, to hold items in place. This also will allow for expanded cargo capacity for the remaining MPLM flights.

GLACIER

The space shuttle flies MPLMs in its cargo bay when a large quantity of hardware has to be ferried to the station at one time. The modules are attached to the inside of the bay for launch and landing. When in the cargo bay, the modules are independent of the shuttle cabin, and there is no passageway for shuttle crew members to travel from the shuttle cabin to the module. After the shuttle has docked to the station, the MPLM is mated to the Node 2 nadir port of the station, using the station's robotic arm. In the event of a failure or issue that prevents the successful latching of the MPLM to the nadir port, the MPLM can be mated to the zenith port. Nodes are modules that connect the elements to the station. For its return trip to Earth, Leonardo will be detached from the station and positioned back into the shuttle's cargo bay.

Leonardo is named after the Italian inventor and scientist Leonardo da Vinci. The two other modules are named Raffaello, after master painter and architect Raffaello Sanzio, and Donatello, for one of the founders of modern sculpture, Donato di Niccolo Di Betto Bardi. Raffaello has flown three times. Leonardo has flown the most because it is equipped with programmable heater thermostats on the outside of the module that allow for more mission flexibility. There are only two more MPLM flights scheduled before the station is complete and the space shuttle retires in 2010.

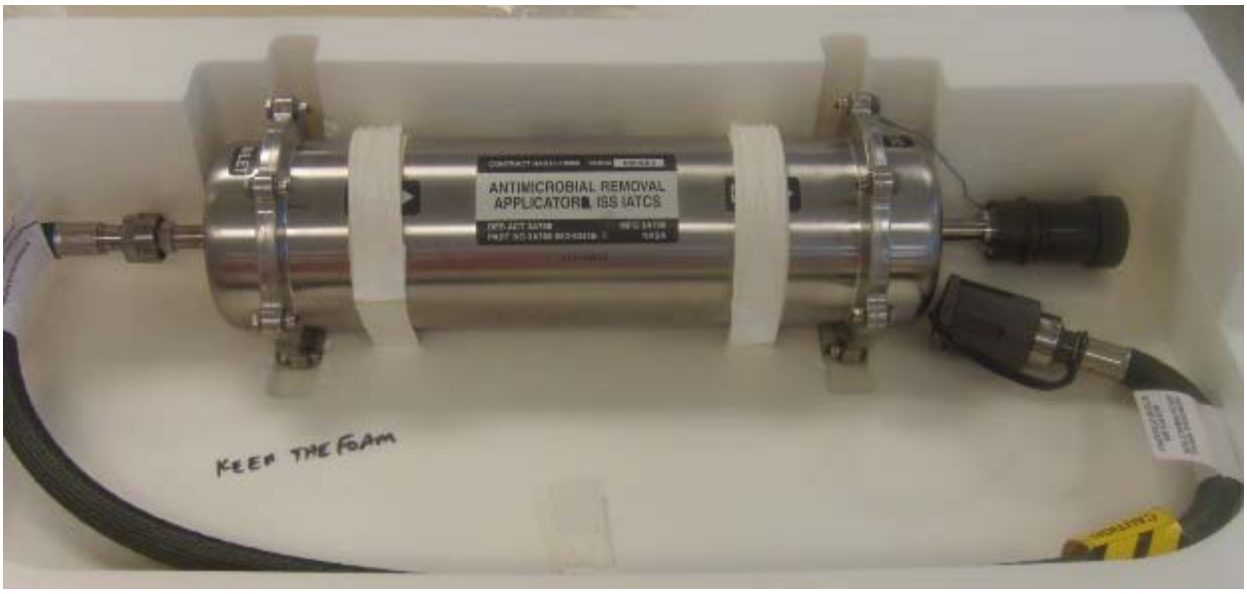

Antimicrobial Applicator
The applicator removes bacteria from cooling and fluid lines on the space station.

RENDEZVOUS AND DOCKING

Rendezvous begins with a precisely timed launch which puts the shuttle on a trajectory to chase the International Space Station. A series of engine firings over the next two days will bring Endeavour to a point about 50,000 feet behind the station.

Once there, Endeavour will start its final approach. About 2.5 hours before docking, the shuttle's jets will be fired during what is called the terminal initiation burn. The shuttle will cover the final miles to the station during the next orbit.

As Endeavour moves closer to the station, its rendezvous radar system and trajectory control sensor will give the crew range and closing-rate data. Several small correction burns will place Endeavour about 1,000 feet below the station.

Commander Chris Ferguson, with help from Pilot Eric Boe and other crew members, will manually fly the shuttle for the remainder of the approach and docking.

He will stop Endeavour about 600 feet below the station. Once he determines there is proper lighting, he will maneuver Endeavour through a nine-minute back flip called the Rendezvous Pitch Maneuver. That allows the station crew to take as many as 300 digital pictures of the shuttle's heat shield.

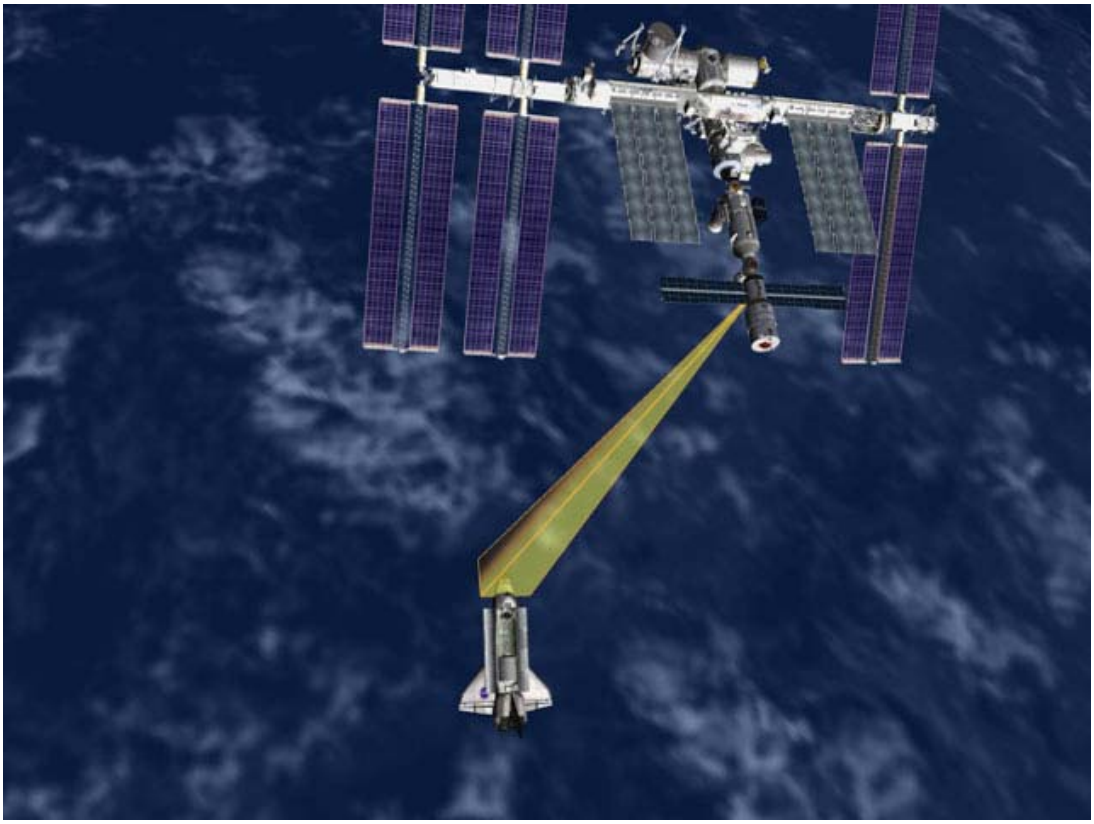

The above image illustrates Endeavour conducting the Rendezvous Pitch Maneuver before docking to the space station.

Station crew members E. Michael Fincke and Greg Chamitoff will use digital cameras with 400 mm and 800 mm lenses to photograph Endeavour's upper and bottom surfaces through windows of the Zvezda Service Module. The 400 mm lens provides up to 3-inch resolution and the 800 mm lens up to 1-inch resolution.

The photography is one of several techniques used to inspect the shuttle's thermal protection system for possible damage. Areas of special interest include the thermal protection tiles, the reinforced carbon-carbon of the nose and leading edges of the wings, landing gear doors and the elevon cove.

The photos will be downlinked through the station's Ku-band communications system for analysis by systems engineers and mission managers.

When Endeavour completes its back flip, it will be back where it started, with its payload bay facing the station.

Ferguson then will fly Endeavour through a quarter circle to a position about 400 feet directly in front of the station. From that point he will begin the final approach to docking to the Pressurized Mating Adapter 2 at the forward end of the Harmony node.

The shuttle crew members operate laptop computers processing the navigational data, the laser range systems and Endeavour's docking mechanism.

Using a video camera mounted in the center of the Orbiter Docking System, Ferguson will line up the docking ports of the two spacecraft. If necessary, he will pause 30 feet from the station to ensure proper alignment of the docking mechanisms.

He will maintain the shuttle's speed relative to the station at about one-tenth of a foot per second, while both Endeavour and the station are moving at about 17,500 mph. He will keep the docking mechanisms aligned to a tolerance of three inches.

When Endeavour makes contact with the station, preliminary latches will automatically attach the two spacecraft. The shuttle's steering jets will be deactivated to reduce the forces acting at the docking interface. Shock absorber springs in the docking mechanism will dampen any relative motion between the shuttle and station.

Once motion between the shuttle and the station has been stopped, the docking ring will be retracted to close a final set of latches between the two vehicles.

UNDOCKING, SEPARATION AND DEPARTURE

At undocking time, the hooks and latches will be opened and springs will push the shuttle away from the station. Endeavour's steering jets will be shut off to avoid any inadvertent firings during the initial separation.

Once Endeavour is about two feet from the station and the docking devices are clear of one another, Boe will turn the steering jets back on and will manually control Endeavour within a tight corridor as the shuttle separates from the station.

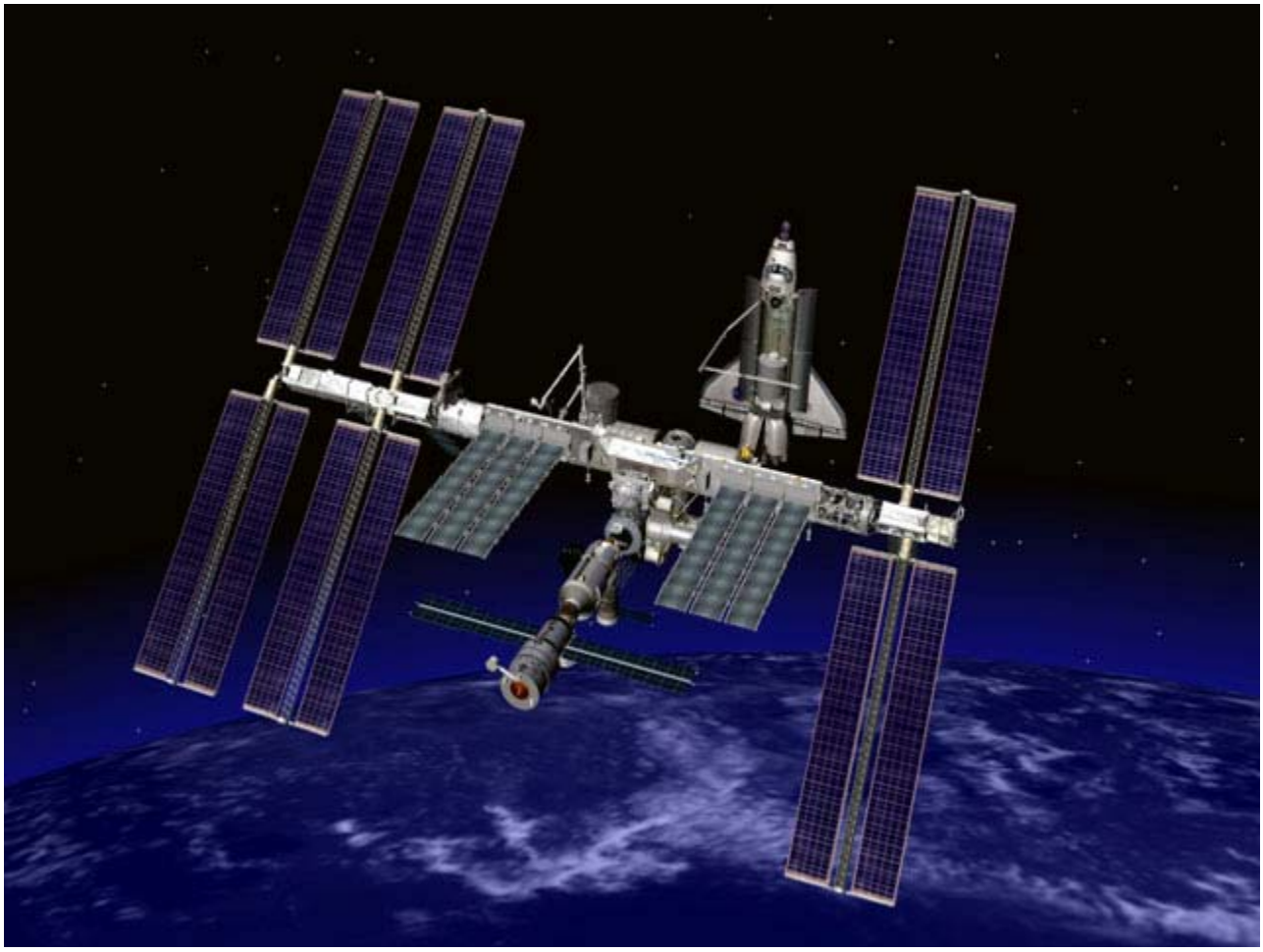

This image depicts Endeavour's undocking and initial separation from the space station during the STS-126 mission.

Endeavour will move to a distance of about 450 feet, where Boe will begin to fly around the station. This maneuver will occur only if propellant margins and mission timeline activities permit.

Once Endeavour completes 1.5 revolutions of the complex, Boe will fire Endeavour's jets to leave the area. The shuttle will move about 46 miles from the station and remain there while ground teams analyze data from the late inspection of the shuttle's heat shield. The distance is close enough to allow the shuttle to return to the station in the unlikely event that the heat shield is damaged, preventing the shuttle's safe re-entry.

This page intentionally blank

ENVIRONMENTAL CONTROL AND LIFE SUPPORT SYSTEM (ECLSS)

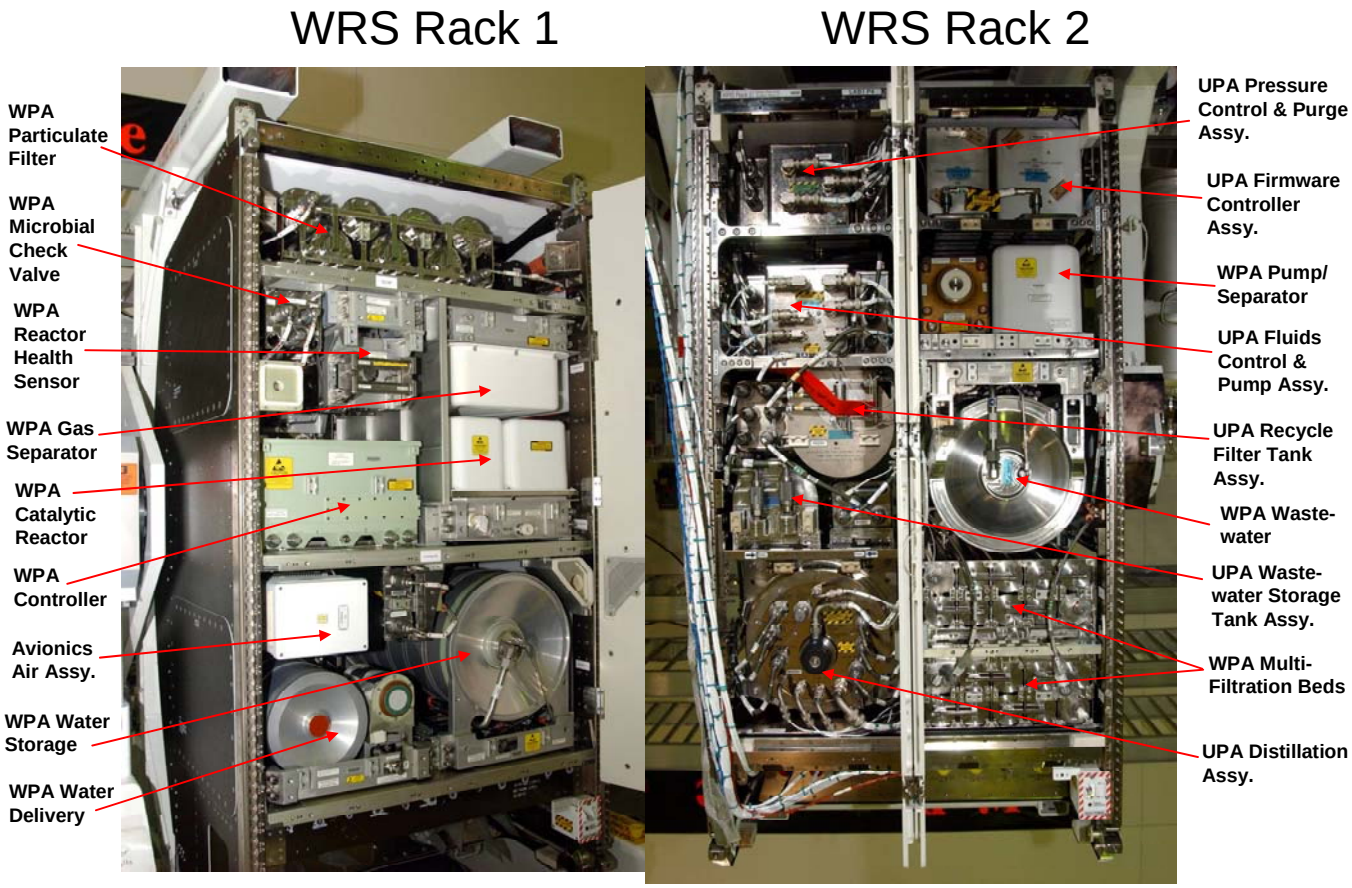

Water Recovery System

NEW WATER RECLAMATION SYSTEM HEADED FOR DUTY ON SPACE STATION

The Water Recovery System (WRS) is the newest part of a comprehensive life support system for the station. The Oxygen Generation System (OGS), which was launched on space shuttle Discovery in July 2006, and the WRS will form the core of NASA's Regenerative Environmental Control and Life Support System (ECLSS).

The Water Recovery System uses a series of chemical processes and filters to treat the astronauts' urine, perspiration and hygiene water, and provide water clean enough to drink. In fact, part of the same process has been used in remote areas of the world to produce drinkable water.

A distillation process is used to recover water from urine. The process occurs within a rotating distillation assembly that compensates for the absence of gravity, aiding in the

separation of liquids and gases in space. Once distilled, the water from the urine processor is combined with other wastewaters and delivered to the water processor for treatment.

The water processor removes free gas and solid materials such as hair and lint, before the water goes through a series of filtration beds for further purification. Any remaining organic contaminants and microorganisms are removed by a high-temperature catalytic reaction. These rigorous treatment processes create water that meets stringent purity standards for human consumption.

During docked operations, the joint Expedition 18 and STS-126 crew will transfer the racks containing the WRS and a new toilet, the Waste and Hygiene Compartment (WHC), to the Destiny Laboratory. They will hook up all necessary electrical and fluid utilities to these systems and activate the WRS, beginning a six-month checkout period.

The joint crew also will activate the Total Organic Carbon Analyzer (TOCA II), which will be used for on-board water quality monitoring. The crew will process previously collected urine through the WRS. They will then collect samples of drinking water processed by the WRS and send it back to Earth for analysis. This will begin a 90-day water quality validation that is required before crews can begin consuming the recycled drinking water.

Engineers at Marshall Space Flight Center, Huntsville, Ala., and at Hamilton Sundstrand Space Systems International Inc., Windsor Locks, Conn., led the design and development of the Water Recovery System.

Total Organic Carbon Analyzer (TOCA II)

NASA engineers Tom Phillips, Philip West and Robert Rutherford prepare one of the two International Space Station Water Recovery System racks from transport. The system will help the station accommodate six crew members. (NASA/MSFC/D. Higginbotham)

ENVIRONMENTAL CONTROL AND LIFE SUPPORT SYSTEM

Earth's natural life support system supplies the air we breathe, the water we drink and other conditions that support life. For people to live in space, however, these functions must be provided by artificial means.

The life support systems on the Mercury, Gemini and Apollo spacecraft in the 1960s were designed to be used once and discarded. Oxygen for breathing was provided from high-pressure or cryogenic storage tanks. Carbon dioxide was removed from the air by lithium hydroxide in replaceable canisters. Contaminants in the air were removed by replaceable filters and activated charcoal integrated with the lithium hydroxide canisters. Water for the Mercury and Gemini missions was stored in tanks, while fuel cells on the Apollo spacecraft produced electricity and provided water as a byproduct. Urine and wastewater were collected and stored or vented overboard.

The space shuttle is a reusable vehicle, unlike those earlier spacecraft, and its life support system incorporates some advances. It still relies heavily on the use of consumables, however, limiting the time it can stay in space.

The space station includes further advances in life support technology and relies on a combination of expendable and limited regenerative life support technologies located in the U.S. Destiny lab module and the Russian Zvezda service module. Advances include the development of regenerable methods for supplying oxygen, by electrolysis of water, and water, by recovering potable water from wastewater.

Because it is expensive to continue launching fresh supplies of air, water and expendable life support equipment to the station and returning used equipment to Earth, these advances will help to reduce costs.

By recycling urine and condensation collected from the atmosphere, the ECLSS will reduce the dependence on Earth resupply by cutting the amount of water and consumables needed to be launched by about 15,000 pounds per year.

The space station's ECLSS performs several functions:

- Provides oxygen for metabolic consumption;
- Provides potable water for consumption, food preparation and hygiene uses;
- Removes carbon dioxide from the cabin air;
- Filters particulates and microorganisms from the cabin air;
- Removes volatile organic trace gases from the cabin air;
- Monitors and controls cabin air partial pressures of nitrogen, oxygen, carbon dioxide, methane, hydrogen and water vapor in the cabin air;
- Maintains total cabin pressure;
- Maintains cabin temperature and humidity levels;
- Distributes cabin air between connected modules.

Providing Clean Water and Air

Portable Water Dispenser

The space station's ECLSS includes two key components – the WRS and the OGS – which are packaged into three refrigerator-sized racks that will be located in the U.S. lab of the station.

The WRS provides clean water by reclaiming wastewater, including water from crew member urine, cabin humidity condensate and Extravehicular Activity (EVA) wastes. The recovered water must meet stringent purity standards before it can be used to support crew, spacewalking and payload activities.

The WRS is designed to recycle crew member urine and wastewater for reuse as clean water.

Each crew member uses about 3.5 liters (0.9 gallons) of water a day. Enough for 2 liters (0.52 gallons) a day is provided by deliveries from Russian Progress resupply vehicles, ESA's Jules Verne Automatic Transfer Vehicle and the space shuttles. The remaining 1.5 liters (0.4 gallons) is recovered condensate from the Russian water processor. The two cargo vehicles carry water to the station in onboard supply tanks. The shuttle delivers water produced as a byproduct of the fuel cells that generate its electricity. The WRS will reduce the amount of water that needs to be delivered to the station for each crew member by 1.3 liters (0.34 gallons) a day, or about 65 percent. Over the course of a year, it will

reduce water deliveries to the station for a six-person crew by 2,850 liters (743 gallons).

Water Recovery System

The WRS consists of a Urine Processor Assembly (UPA) and a Water Processor Assembly (WPA). A low-pressure vacuum distillation process is used to recover water from urine. The entire process occurs within a rotating distillation assembly that compensates for the absence of gravity and aids in the separation of liquids and gases in space.

Water from the urine processor is combined with all other wastewaters and delivered to the water processor for treatment. The water processor removes free gas and solid materials such as hair and lint, before the water goes through a series of multifiltration beds for further purification. Any remaining organic contaminants and microorganisms are removed by a high-temperature catalytic reactor assembly.

The purity of water is checked by electrical conductivity sensors. The conductivity of water is increased by the presence of typical contaminants. Unacceptable water is reprocessed, and clean water is sent to a storage tank, ready for use by the crew.

Water Use on Earth Compared to Space

Item	On Earth kg per person per day[1]	gallons per person per day	In Space kg per person per day[2]	gallons per person per day	% Reduction
Oxygen	0.84		0.84		0.0
Drinking Water	10	2.64	1.62	0.43	83.8
Dried Food	1.77		1.77		0.0
Water for Food	4	1.06	0.80	0.21	80.0
Water for Brushing Teeth	5	1.32	0.81	0.21	83.8
Water to Flush Toilet	88	23.2	0.50	0.13	99.4
Water to Shower	50	13.2	3.64	0.96	92.7
Water to Wash Hands	20	5.28	1.82	0.48	90.9
Water to Wash Clothes	16	4.23	12.5	3.3	21.9
Water to Wash Dishes	12	3.17	5.45	1.44	54.6

[1] From Water Quality by Tchobanoglous and Schroeder, 1987 Addison-Wesley Pub.; Reading Mass, USA
[2] From Space Station Architectural Control Document

The items that the astronauts need are in the left-hand column of the table. The average amounts used on Earth are in the second and third columns, and the amounts allowed for space are in the fourth and fifth columns. The space allotments are so much smaller because water is very heavy and we can't carry that much water with us. Also, on Earth people spend a lot of time running the faucet waiting for the water to get hotter or colder, for instance. In addition, our washing machines and dishwashers are not as efficient as they could be, because water is not in scarce supply on Earth. The dish and clothes wash waters aren't quite as high a reduction because we haven't spent as much time developing those technologies for space. Greyed rows are not done on the station.

Oxygen Generation System

The OGS produces oxygen for breathing air for the crew and laboratory animals, as well as for replacement of oxygen lost due to experiment use, airlock depressurization, module leakage and carbon dioxide venting. The system consists mainly of the Oxygen Generation Assembly (OGA) and a Power Supply Module.

The heart of the Oxygen Generation Assembly is the cell stack, which electrolyzes, or breaks apart, water provided by the WRS, yielding oxygen and hydrogen as byproducts. The oxygen is delivered to the cabin atmosphere, and the hydrogen is vented overboard. The Power Supply Module provides the power needed by the OGA to electrolyze the water.

The OGS is designed to generate oxygen at a selectable rate and is capable of operating both continuously and cyclically. It provides from 5 to 20 pounds of oxygen per day during continuous operation and a normal rate of 12 pounds of oxygen per day during cyclic operation.

The OGS will accommodate the testing of an experimental Carbon Dioxide Reduction Assembly. Once deployed, the reduction assembly will cause hydrogen produced by the OGA to react with carbon dioxide removed from the cabin atmosphere to produce water and methane. This water will be available for processing and reuse, thereby further reducing the amount of water to be resupplied to the space station from the ground.

Comparison between Earth and ISS Water Cycles

Storage (Clouds, ground water, rivers, lakes, ocean)	Tanks
Runoff	All liquid water movement is in plumbing
Evaporation and Transpiration	From wet towels and crew's perspiration and respiration
Condensation	In the air conditioner's condensing heat exchanger
Precipitation	In our case, this is the condensate collecting in the condensate tanks

Comparison between ISS and Earth systems

Earth	ISS
Sewage treatment plant	Urine processor assembly
Sewage tank	UPA wastewater storage tank assembly
Water treatment holding tank	WPA wastewater tank
Water treatment plan	Water processor assembly
Water tower	WPA water storage
Water lift station and distribution	WPA water delivery
Kitchen sink (food preparation, cleaning, drinking)	Potable water dispenser (hot and ambient water for food and drinking, only source of hot water is here)
Bathroom sink and shower (personal and oral hygiene)	Hygiene water hose (ambient temperature water only)
Toilet (gravity driven)	Toilet (air flow driven

FUTURE

Ultimately, expendable life support equipment is not suitable for long-duration, crewed missions away from low Earth orbit due to the resupply requirements. On deep space missions in the future, such resupply will not be possible because of the distances involved, and it will not be possible to take along all the water and air that would be required for a voyage of months or years. Regenerative life support hardware, which can be used repeatedly to generate and recycle the life sustaining elements required by human travelers, is essential for long-duration trips into space.

SOLAR ALPHA ROTARY JOINT (SARJ)

There are two Solar Alpha Rotary Joints (SARJs) on the International Space Station. They connect the Port 3 and Port 4 (left side) truss segments and the Starboard 3 and Starboard 4 (right side) segments. P3/P4 was flown up on the STS-115 mission on Sept. 9, 2006, while S3/S4 was flown up on the STS-117 mission June 8, 2007. The SARJ is a 10.5-foot diameter (129.5 inch) rotary joint that tracks the sun in the alpha axis that turns four port and four starboard solar arrays wings. The eight solar array wings (on P4, P6, S4 and S6) are used to convert solar energy to electrical power. The SARJ continuously rotates to keep the solar array wings on S4 and S6 and P4 and P6 oriented toward the sun as the station orbits the Earth. The SARJ rotates 360 degrees every orbit or about 4 degrees per minute.

The SARJ weighs approximately 2,506 pounds and is made of aluminum and corrosion resistant steel. The major components of the SARJ are the Utility Transfer Assembly (UTA), Trundle Bearing Assemblies (TBA) (12 per joint), race rings (2 per joint) and Drive/Lock Assembly (DLA) (2 per joint) and the Rotary Joint Motor Controller (RJMC) (2 per joint). The SARJ can spin 360 degrees using bearing assemblies and a control system to turn. All of the power flows through the UTA in the center of the SARJ. A large 10.5-foot (129.5-inch diameter), 229-pound geared race ring is secured to the structure by the TBAs and driven by the DLA using the software control commanded from the DLA/RJMC pair. The DLA engages the teeth of the race ring to rotate the SARJ. The gold plating on the TBA rollers is transferred from the roller to the race ring to lubricate the ring to create a lubricating film. Each SARJ has two race rings, an inboard race ring that is attached to the P3 or S3 truss and an outboard race ring that is attached to the P4 or S4 truss segment. The 12 TBAs are attached to the inboard SARJ race ring via mounts that do not rotate. The TBAs are the structural connection in orbit between the inboard and outboard race rings. The DLA also are attached to the inboard SARJ structure and have "follower assemblies" that act in the same fashion as the TBAs, helping to locate the driving gear relative to the race ring teeth. The UTA is an electrical roll ring assembly that allows transmission of data and power across the rotating interface so it never has to unwind. The UTA passes through the center, or hub, of the joint so it interfaces with both the inboard and outboard segments. The roll ring assemblies allow the outboard elements to rotate relative to the inboard elements while providing continuous data and power transmission. Under contract to Boeing, the SARJ was designed, built and tested by Lockheed Martin in Sunnyvale, Calif.

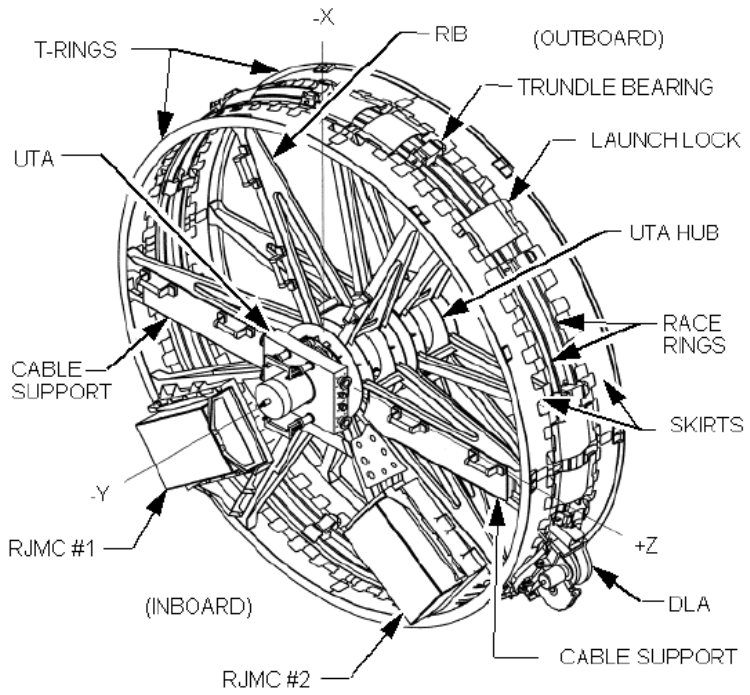

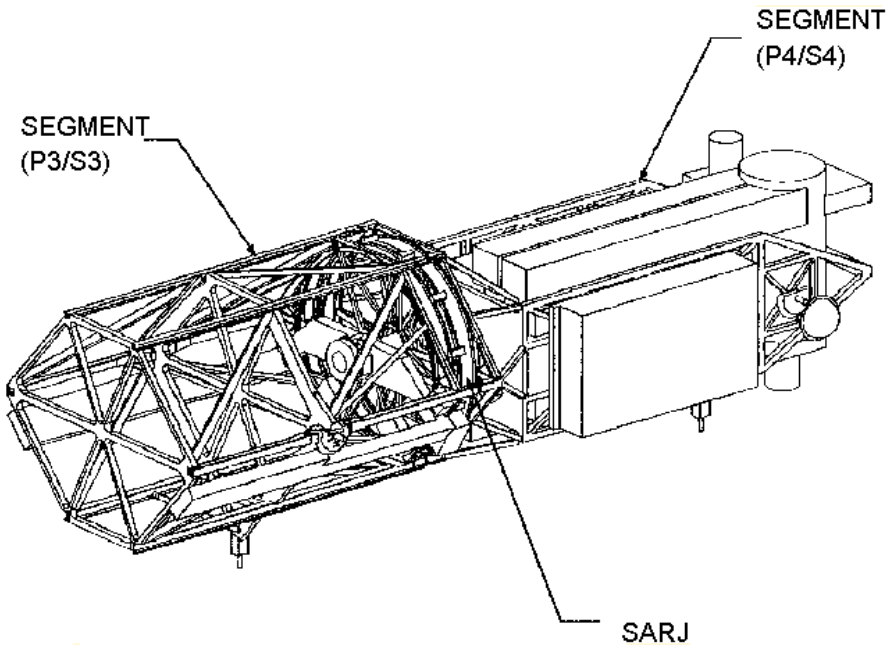

Solar Alpha Rotary Joint (SARJ)

Trundle Bearing Assembly

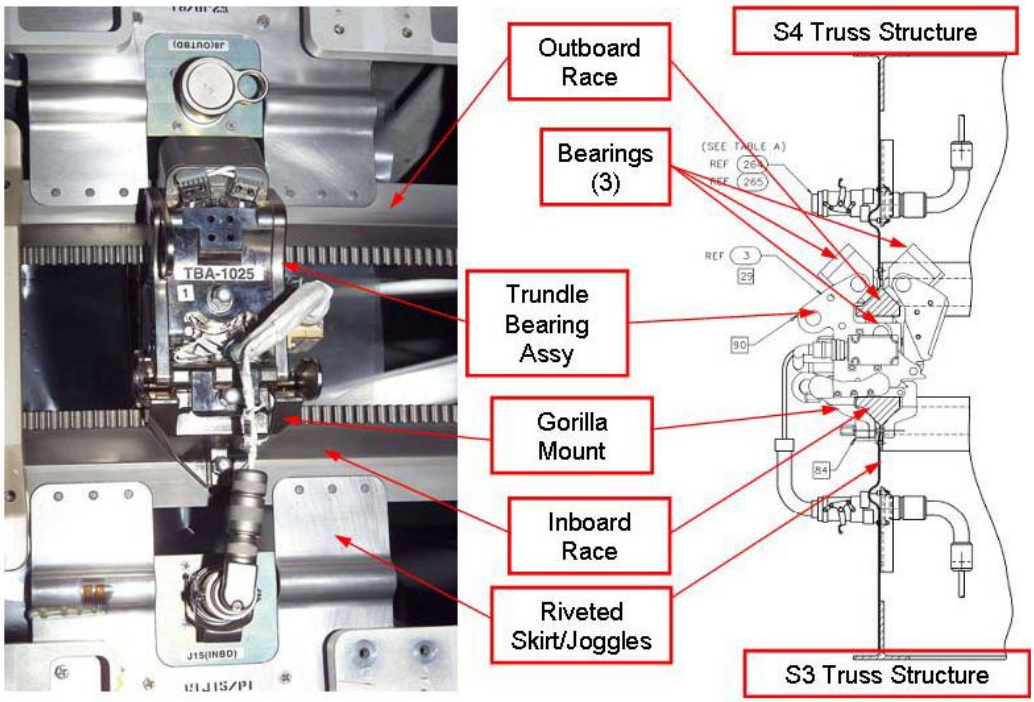

Race Ring, Gear Teeth, and Trundle Bearing Assembly

STARBOARD OUTBOARD RACE RING DAMAGE

Damage to the race ring and magnetized debris

NASA and Boeing engineers noticed a vibration and increased electrical currents on the starboard SARJ in September 2007. The increased currents were intermittent, not constant. The readings, indicating increased friction, ran as high as 0.9 amps, whereas the port SARJ has continued to operate nominally with a drive current of approximately one-seventh of an amp (0.136 to 0.152 amps). Subsequent spacewalks confirmed that there was damage to the surface of the outboard race ring, which has a triangular cross-section that the 12 trundle bearings roll on.

NASA has since limited movement of the starboard SARJ as a result of this damage

because of unacceptable vibrations and the desire not to propagate the race ring surface damage. The principal concern is accelerated fatigue of surrounding hardware due to increased vibration caused from the damaged surface. The damaged race ring was not designed to be removed. As a result, the SARJ is no longer in automated continuous tracking mode and is rotated only when needed.

Analysis by a NASA-led industry team concluded that the most probable cause of the damage was a lack of adequate lubrication between the trundle bearings and the race ring surface. The lack of lubrication led to excessive friction which caused tipping of the rollers which put a stress on the race ring great enough to crack the hardened steel surface. The loss of gold on a subset of the rollers on the starboard SARJ was documented during component development. The system effect of the lack of the gold lubricant on these rollers was not fully realized at the time. The loss of gold could have been caused by improper application of gold to the bearing assemblies. The failure investigation team also is investigating if the lubrication properties of gold in the system application are adequate. The team recreated the failure with a gold-coated roller after an equivalent six-month run time in orbit. It is not understood why the gold lubrication did not properly transfer to the rolling surface. The port side SARJ continues to function normally.

At the time of development, there was little data on how long liquid lubricants would survive in a space environment in the presence of atomic oxygen. The design community agreed that a gold lubricant via TBAs would be a better choice to meet design life because of its insensitivity to atomic oxygen. In addition, gold's lubrication has been proven through testing to provide a lower coefficient of friction than that of bare steel-on-steel contact.

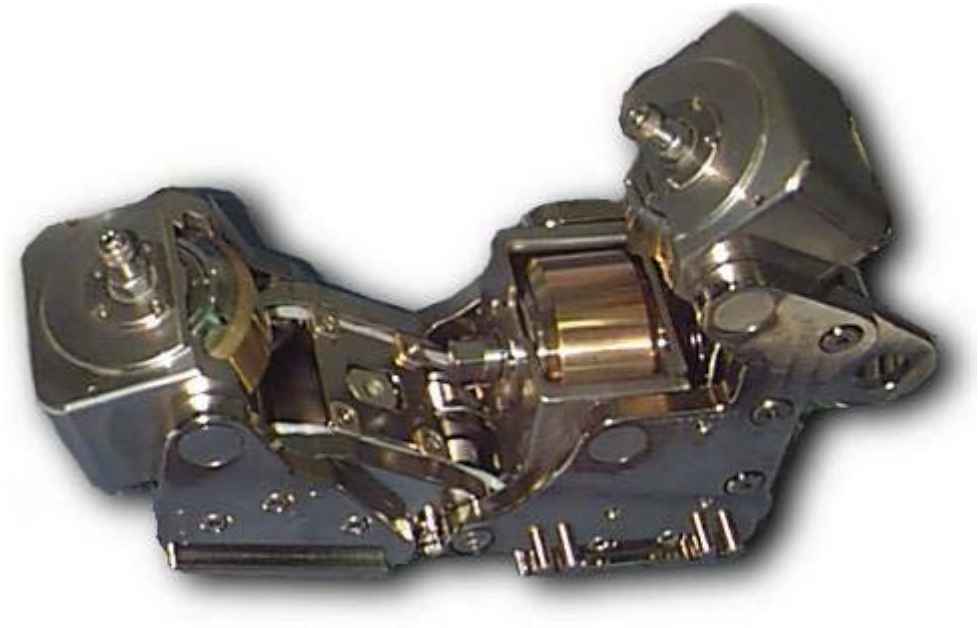

Gold rollers from the TBA

THE TEMPORARY FIX

Braycote Grease Gun

Based on current understanding of operations on the International Space Station, a Braycote grease can provide a lower coefficient of friction and will be applied to both SARJ units during the STS-126 mission. Braycote grease is a special, heavy, vacuum stable grease that has been designed to operate in the extreme temperature space environment. The grease will be applied in the same manner that caulk is applied from a caulk gun. The grease gun is very similar to the application methods used to apply the space shuttle tile repair materials. NASA has done extensive testing of the tools and procedures during earlier spacewalks.

On the starboard SARJ, the crew will be applying 1/8 inch bead of grease to the entire outboard ring on all three surfaces. On the port SARJ, the crew will be applying the grease in about three foot segments to all three surfaces separated by about three feet of unlubricated race ring surfaces. As the SARJ rotates after the lubricant is applied, the trundle bearing rollers will spread the grease to the entire race ring. The process consists of the astronauts removing the multi-layer insulation covers, cleaning the area first with a dry cloth wipe, then with a greased wipe, and finally applying multiple beads of grease. On the starboard side, they also will use a putty-like scraper tool to clean up some of the debris and they will additionally replace 11 of the 12 trundle bearings, since they have some metal shavings and debris on them. The TBAs will be returned to Earth to aid in the root cause investigation as well as provide optimal chance for success of cleaning operation. One of the TBAs had been removed on an earlier spacewalk for analysis and was subsequently replaced. During this mission, the astronauts also will apply the Braycote grease to the port SARJ.

Engineers will monitor SARJ operation by evaluating the DLA operating current as well as on-board accelerometer data after cleaning the starboard race ring and applying the Braycote grease. NASA will not go into the continuous autotrack mode with the starboard side SARJ until a permanent fix is implemented.

THE PERMANENT REPAIR

Although the starboard SARJ has a redundant inboard race ring that could be used, NASA instead chose not to use this ring to ensure there will always be an available backup. Instead NASA approved a permanent fix on Sept. 2, 2008, that would involve installation of a third race ring assembly, new trundle bearings, new DLAs and a modified UTA to repair the starboard SARJ system. The debris-contaminated TBAs and DLAs will be removed and returned to Earth for refurbishment and the ring areas will be cleaned before insertion of the third ring and new TBA/DLA hardware. The normal UTA will be swapped out with the modified UTA. An estimated 10 spacewalks will be required for the repairs and are scheduled to occur in 2010 after the new ring assembly is brought up by the space shuttle. Boeing and its subcontractor Lockheed Martin will be responsible for designing the new hardware to allow insertion of the third ring.

This page intentionally blank

SPACEWALKS

ISS016E032708

Anchored to a Canadarm2 mobile foot restraint, astronaut Rick Linnehan, STS-123 mission specialist, participates in the mission's first scheduled session of extravehicular activity as construction and maintenance continue on the International Space Station.

Four spacewalks, three astronauts and two Solar Alpha Rotary Joints (SARJ) – that summarizes the spacewalk plan for STS-126. Mission Specialists Heidemarie Stefanyshyn-Piper, Steve Bowen and Shane Kimbrough will spend a combined total of 26.5 hours on flight days 5, 7, 9 and 11 working outside the station, and the bulk of that time will be used cleaning and lubricating the station's two 10-foot-wide rotary joints, known as SARJs.

Piper, the lead spacewalker for the mission, will suit up for the first three spacewalks in a spacesuit marked with solid red stripes. She is a veteran spacewalker, with two extravehicular activities, or EVAs, performed during STS-115 in 2006.

Bowen and Kimbrough both will perform their first spacewalks. Bowen will participate in the first, third and fourth EVAs and wear an all white spacesuit, while Kimbrough will wear a

spacesuit with broken red stripes for spacewalks two and four.

Meanwhile, on the inside, Mission Specialists Donald Pettit and Sandra Magnus will operate the station's robotic arm during the first and second spacewalks. Kimbrough will act as the mission's intravehicular officer, or spacewalk choreographer, for the spacewalks that he is not performing. Eric Boe will coreograph those that Kimbrough performs.

Preparations will start the night before each spacewalk, when the astronauts spend the night in the station's Quest Airlock. This practice is called the campout prebreathe protocol and is used to purge nitrogen from the spacewalkers' systems and prevent decompression sickness, also known as "the bends."

During the campout, the two astronauts performing the spacewalk will isolate themselves inside the airlock while the airlock's air pressure is lowered to 10.2 pounds per square inch, or psi. The station is kept at the near-sea-level pressure of 14.7 psi. The morning of the spacewalk, the astronauts will wear oxygen masks while the airlock's pressure is raised back to 14.7 psi for an hour and the hatch between the airlock and the rest of the station is opened. That allows the spacewalkers to perform their morning routines before returning to the airlock, where the air pressure is lowered again. About 50 minutes after the spacewalkers don their spacesuits, the prebreathe protocol will be complete.

The procedure enables spacewalks to begin earlier in the crew's day than was possible before the protocol was adopted.

EVA-1

Duration: 6 hours, 30 minutes
Crew: Piper and Bowen

EVA Operations

- Transfer an empty nitrogen tank assembly from external stowage platform 3 to the shuttle's cargo bay for return to Earth
- Transfer a new flex hose rotary coupler to external stowage platform 3 for future use when needed
- Remove an insulation cover on the Kibo External Facility berthing mechanism
- Begin cleaning and lubrication for the starboard SARJ and replacement of its 12 trundle bearing assemblies

The first order of business will be to swap the external equipment just delivered by the space shuttle with equipment that will be brought back to Earth. Piper will remove an empty nitrogen tank assembly that has been waiting on the external stowage platform 3 on the port, or left, side of the station's truss since the June STS-124 mission. After installing a foot restraint on the end of the station's robotic arm to stand in, Piper will remove the tank and carry it as she rides the arm to the shuttle's cargo bay.

Bowen will help Piper remove the nitrogen tank, then take care of some minor tasks, including retrieving a camera and closing a window flap on Harmony's zenith common berthing mechanism. Bowen will meet Piper in the cargo bay to help stow the tank and remove a spare flex hose rotary coupler, or FHRC. FHRCs are used to transfer liquid ammonia across the rotary joints that allow the station's radiators to rotate.

Piper will carry the FHRC back to the stowage platform via robotic arm, where she and Bowen will install it for future use. Then, while Piper climbs off of the robotic arm, Bowen will remove some insulation from the common berthing mechanism that will be used to attach the Japanese external facility to the Kibo laboratory.

When those tasks are done, the spacewalkers will start the mission's first round of starboard SARJ maintenance. The rotary joint has 22 protective insulation covers, of which no more than six can be removed at any one time. Piper will begin by opening cover eight. Cover seven was removed and left off during an inspection on a previous spacewalk. With the insulation covers removed, Piper will have access to the 10th of the joint's trundle bearing assemblies, or TBAs, which connect the two halves of the joint and allow one side to rotate while the other stays still. Meanwhile, Bowen will work under covers 22 and one, on TBA six.

With the covers removed, Piper and Bowen then will remove their respective TBAs and stow them in special bags designed to hold one TBA apiece. With that equipment out of the way, the spacewalkers will be able to begin cleaning the area under the open covers. First, they will use a wet wipe to remove debris from the cleaner areas of the joint, then to clean off the damaged outboard outer canted surface.

Next, they will use a grease gun to add a line of grease to the outer canted surface and use a scraper similar to a putty knife to remove some of the debris that has become "pancaked" on the surface. They will clean the scrapers off inside of a debris container to prevent metal flakes from floating away, and then use a dry wipe to remove the grease from the area. Then

they will give the entire area a final wipe with a dry wipe to remove any residual grease and debris.

Once the area is clean, the astronauts can begin lubricating the surface of the outboard ring. They will use a grease gun with a special, j-shaped nozzle to add grease to the inner canted surface, and a straight-nozzle grease gun for the outer canted and datum A surfaces.

Finally, before closing the covers, Piper and Bowen will install clean trundle bearing assemblies in place of the ones they removed. Piper then will then repeat the process on TBA 11, under covers nine and 10. However, she will not reinstall TBA 11 until the second spacewalk.

EVA-2

Duration: 6 hours, 30 minutes
Crew: Piper and Kimbrough

EVA Operations

- Relocate the two Crew and Equipment Translation Aid (CETA) carts from the starboard side of the Mobile Transporter to the port side
- Lubricate the station robotic arm's latching end effector A snare bearings
- Continue cleaning and lubrication for the starboard SARJ and replacement of its 12 trundle bearing assemblies

The first task of the second spacewalk will give Kimbrough a chance to ride the station's robotic arm. He and Piper will move the station's two Crew and Equipment and Translation Aid, or CETA, carts, the rail carts that allow astronauts to move equipment along the station's truss, from their current homes on the starboard side of the station's Mobile Transporter (MT) to the port side.

Piper will get the carts ready for transfer by moving them into position and unlocking their wheel bogies. Kimbrough first will carry CETA 1 and then CETA 2 as he is flown on the robotic arm from one side of the MT to the other. Piper will meet him there each time, to install the carts in their new locations.

When that task is done, Kimbrough will climb off of the robotic arm and remove the foot restraint Piper installed on the first spacewalk. This will give him access to the arm's latching end effector, or LEE, the snares that allow it to grasp equipment. Inside the station, Pettit and Magnus will command the LEE, which has been experiencing some sticky spots, to open and close its snares. Kimbrough will apply lubricant to the LEE's snare bearings and rotate the bearings using needlenose pliers to ensure the lubricant covers the bearings.

Meanwhile, Piper will return to the starboard SARJ to continue its cleaning and lubrication. Following the first spacewalk, the SARJ will be rotated so that the areas Piper and Bowen already cleaned will be under the joint's two drive lock assemblies, which cannot be removed easily. Piper will reopen covers nine and 10 and clean the new area under them, before reinstalling TBA 11, which she removed during the first spacewalk, and reclosing the covers.

Next Piper will remove and replace TBAs eight and nine under cover five. When Kimbrough finishes his work on the robotic arm, he'll join her at the SARJ and work on TBAs 12, under covers 11 and 12.

EVA-3

Duration: 7 hours
Crew: Piper and Bowen

EVA Operations:

- Complete cleaning, lubrication and TBA replacement for the starboard SARJ

The third and longest spacewalk of the mission will be completely devoted to work on the starboard SARJ. Using the same methods, Piper will open covers 13 and 14, remove TBA one, clean and lubricate the area, install a new TBA and close the covers. She will repeat the process on TBA two under covers 15 and 16 and TBA three under covers 17 and 18.

Bowen will do the same for TBA four under covers 19 and 20, TBA six under covers 22 and one and TBA seven under covers two and three. He also will remove TBA five under cover 20; however, it was replaced on a previous spacewalk, so he will simply clean and re-install it.

EVA-4

Duration: 6 hours, 30 minutes
Crew: Bowen and Kimbrough

EVA Operations:

- Lubricate the port SARJ
- Install video camera
- Re-install insulation cover on the Kibo External Facility berthing mechanism
- Perform Kibo robotic arm grounding tab maintenance
- Install spacewalk handrails on Kibo
- Install Global Positioning Satellite (GPS) antennae on Kibo
- Photograph radiators
- Photograph trailing umbilical system cables

The mission's final spacewalk will require careful coordination, as the spacewalkers perform preventative maintenance on the station's port SARJ, which currently is functioning well. Kimbrough will have just the one spacewalk to lubricate the same surface area that was lubricated over three spacewalks on the starboard side.

To make that possible, he and Bowen will open covers 6, 7, 10, 11, 14 and 15, and leave them open for most of the spacewalk. Kimbrough then will lubricate the exposed area and move away so that flight controllers on the ground can rotate the joint 180 degrees. That will help spread the grease, and expose new, unlubricated areas under the open covers.

While the joint is rotating, Kimbrough will return to the Quest airlock to retrieve a video camera. He will install the camera on the first port segment of the station's truss, where it will be used next year to provide views of the robotic arm's capture and docking of the first Japanese H-2 Transfer Vehicle.

Kimbrough then will move back to the port SARJ, grease the newly exposed areas and close the covers.

Meanwhile, Bowen will work on several projects at the Japanese Kibo module. He will reinstall the common berthing mechanism's insulation that he removed during the first spacewalk. Next, he will tuck in the module's robotic arm grounding tabs, which are obscuring the view of the arm's camera, by wrapping the tabs around a cable and Velcroing them together.

Afterward, Bowen will install three spacewalk handrails, two worksite interfaces and two Global Positioning Satellite (GPS) antennae on Kibo's exterior. The H-2 Transfer Vehicle will use the GPS antennae to navigate to the space station.

Both astronauts will wrap up the spacewalks by taking photographs. Bowen will photograph the radiators on the first port and starboard truss segments, using both regular and infrared cameras. In September, ground controllers noticed damage to one panel of the starboard radiator.

Blemishes have been noticed on the trailing umbilical system cable of the mobile transporter, so Kimbrough has been asked to photograph it as well. The photographs will be used by teams on the ground to determine the cause of the damage and blemishes and decide what action, if any, should be taken.

This page intentionally blank

EXPERIMENTS

The space shuttle and International Space Station have an integrated research program that optimizes the use of shuttle crew members and long-duration space station crew members to address research questions in a variety of disciplines.

For information on science on the station, visit:

http://www.nasa.gov/mission_pages/station/science/index.html

or

http://iss-science.jsc.nasa.gov/index.cfm

Detailed information is located at:

http://www.nasa.gov/mission_pages/station/science/experiments/Expedition.html

DETAILED TEST OBJECTIVES

Detailed Test Objectives (DTOs) are aimed at testing, evaluating or documenting space shuttle systems or hardware or proposed improvements to the space shuttle or space station hardware, systems and operations.

SDTO 13005-U ISS Structural Life and Life Validation and Extension

The purpose of this Station Development Test Objective (SDTO) is to guarantee safety of the station structure and crew by validating the in-orbit math models that were created for the space station. The test will be used to authenticate critical interface loads and to help improve predictions for fatigue of components on the station.

The test will provide dynamic loads information for engineers to use in creating precise models that can be used for analysis. In-orbit data may aid in detecting structural anomalies, and the station's response to actual loading events aids in postflight reconstruction of loads that help determine structural life usage.

The test requires actual or educated estimates of input and actual in-orbit sensor measurements of the station response. Measurement of the force input, such as thruster firing sequences or video of crew activity, and the station's response will aid in the reconstruction of station loads and structural life usage over the lifetime of the station, thus allowing the structure's life to be extended.

All of the in-orbit dynamic tests previously were performed on models in which the International Space Station and orbiter were docked.

There are six such tests planned for STS-126.

Space Shuttle Solid Rocket Motor Pressure Oscillation Data Gathering

The Space Shuttle Program is gathering data on five shuttle flights, beginning with STS-126, to gain a greater understanding of the pressure oscillation, or periodic variation, phenomena that regularly occurs within solid rocket motors. The pressure oscillation that is observed in solid rocket motors is similar to the hum made when blowing into a bottle. At 1.5 psi, or pounds per square inch, a pressure wave will move up and down the motor from the front to the rear, generating acoustic noise as well as physical loads in the structure. These data are necessary to help propulsion engineers

confirm modeling techniques of pressure oscillations and the loads they create. As NASA engineers develop alternate propulsion designs for use in NASA, they will take advantage of current designs from which they can learn and measure. In an effort to obtain data to correlate pressure oscillation with the loads it can generate, the shuttle program is using two data systems to gather detailed information. Both systems are located on the top of the solid rocket motors inside the forward skirt.

The Intelligent Pressure Transducer, or IPT, is a stand-alone pressure transducer with an internal data acquisition system that will record pressure data to an internal memory chip. The data will be downloaded to a computer after the booster has been recovered and returned to the Solid Rocket Booster Assembly and Refurbishment Facility at NASA's Kennedy Space Center, Fla. This system has been used on numerous full-scale static test motors in Utah and will provide engineers with a common base to compare flight data to ground test data.

The Enhanced Data Acquisition System, or EDAS, is a data acquisition system that will record pressure data from one of the Reusable Solid Rocket Booster Operational Pressure Transducers, or OPT, and from accelerometers and strain gages placed on the forward skirt walls. These data will provide engineers with time synchronized data that will allow them to determine the accelerations and loads that are transferred through the structure due to the pressure oscillation forces.

Intelligent Pressure Transducer

Data Acquisition System

SHORT-DURATION U.S. INTEGRATED RESEARCH TO BE COMPLETED DURING STS-126/ULF2

Validation of Procedures for Monitoring Crew Member Immune Function – Short Duration Biological Investigation (Integrated Immune-SDBI) will assess the clinical risks resulting from the adverse effects of spaceflight on the human immune system and will validate a flight-compatible immune monitoring strategy. It will collect and analyze blood, urine and saliva samples from crew members before, during and after spaceflight to monitor changes in the immune system.

Maui Analysis of Upper Atmospheric Injections (MAUI) will observe the space shuttle engine exhaust plumes from the Maui Space Surveillance Site in Hawaii. The observations will occur when the space shuttle fires its engines at night or twilight. A telescope and all-sky imagers will record images and data while the shuttle flies over the Maui site. The images will be analyzed to understand better the interaction between the spacecraft plume and the upper atmosphere of Earth.

National Lab Pathfinder – Vaccine – 2 (NLP-Vaccine-2) is a commercial payload serving as a pathfinder for the use of the space station as a National Laboratory after station assembly is complete. It contains Salmonella enterica, a disease-causing organism, and will use spaceflight to develop potential vaccines for the prevention of infections on Earth and in microgravity.

The Pico-Satellite Solar Cell Experiment (PSSC) is a picosatellite designed to test space environment effects on new solar cell technologies.

Shuttle Exhaust Ion Turbulence Experiments (SEITE) will use space-based sensors to detect the ionospheric turbulence inferred from the radar observations of a previous space shuttle Orbital Maneuvering System burn experiment using ground-based radar.

Sleep-Wake Actigraphy and Light Exposure During Spaceflight – Short (Sleep-Short) will examine the effects of spaceflight on the sleep-wake cycles of the astronauts during space shuttle missions. Advancing state-of-the-art technology for monitoring, diagnosing and assessing treatment of sleep patterns is vital to treating insomnia on Earth and in space.

SAMPLES/HARDWARE RETURNING FROM ISS ON STS-126

U.S. Research

Analyzing Interferometer for Ambient Air (ANITA) will monitor 32 potential gaseous contaminants in the atmosphere aboard the station, including formaldehyde, ammonia and carbon monoxide. The experiment will test the accuracy and reliability of this technology as a potential next-generation atmosphere trace-gas monitoring system for the station.

Cardiovascular and Cerebrovascular Control on Return from ISS (CCISS) will study the effects of long-duration spaceflight on crew members' heart functions and the blood vessels that supply the brain. Learning more about the cardiovascular and cerebrovascular systems could lead to specific countermeasures that might better protect future space travelers. This experiment is collaborative effort with the Canadian Space Agency.

Commercial Generic Bioprocessing Apparatus Science Insert – 02 (CSI-02) is an educational payload designed to interest middle school students in science, technology, engineering and math through participation in near real-time research conducted aboard the station. Students will observe a silicate garden experiment through data and imagery downlinked and distributed directly into the classroom via the Internet.

Stability of Pharmacotherapeutic and Nutritional Compounds (Stability) will study the effects of radiation in space on complex organic molecules, such as vitamins and other compounds in food and medicine. This will help researchers develop more stable and reliable pharmaceutical and nutritional countermeasures suitable for future long-duration missions to the moon and Mars.

Validating Vegetable Production Unit (VPU) Plants, Protocols, Procedures and Requirements (P3R) Using Currently Existing Flight Resources (Lada-VPU-P3R) is a study to advance the technology required for plant growth in microgravity and to research related food safety issues. Lada-VPU-P3R also investigates the non-nutritional value to the flight crew of developing plants in orbit. The Lada-VPU-P3R uses the Lada hardware on the space station and falls under a cooperative agreement between NASA and the Russian Federal Space Agency.

European Space Agency Research

Role of Apoptosis in Lymphocyte Depression (ROALD) will determine the role of apoptosis, or programmed cell death, in loss of T-lymphocyte (white blood cells originating in the thymus) activity in microgravity. Various aspects of the apoptotic process will be assessed, using human T-lymphocytes, by analyzing gene expressions of metabolites of

reactive oxygen specie and membrane properties.

SOdium LOading in Microgravity (SOLO) This proposal is a continuation of extensive research into the mechanisms of fluid and salt retention in the body during bed rest and spaceflights. It is a metabolically controlled study. During long-term space missions, astronauts will participate in two study phases of five days each. Subjects follow a diet of constant either low or normal sodium intake, fairly high fluid consumption and isocaloric nutrition.

Simulation of Geophysical Fluid Flow under Microgravity (Geoflow) will investigate the flow of a viscous incompressible fluid between two concentric spheres, rotating about a common axis, under the influence of a simulated central force field. This flow is of importance for astrophysical and geophysical problems, like global scale flow in the atmosphere, the oceans and in the liquid nucleus of planets. There is also an applied interest in this work: the electro-hydrodynamic force that simulates the central gravity field may find applications in high-performance heat exchangers, and in the study of electro-viscous phenomena.

Japan Aerospace Exploration Agency Research

Chaos, Turbulence and its Transition Process in Marangoni Convection (Marangoni) is a surface-tension-driven flow experiment. A liquid bridge of silicone oil (5 or 10 cSt) is formed into a pair of disks. Convection is induced by imposing the temperature difference between disks. Due to the fluid instability, flow transits from laminar to oscillatory, chaos, and turbulence flows one by one as the driving force increases. The flow and temperature fields are observed in each stage and the transition conditions and processes precisely investigated.

EXPERIMENTS AND HARDWARE TO BE DELIVERED TO INTERNATIONAL SPACE STATION

U.S. Research

Commercial Generic Bioprocessing Apparatus Science Insert – 03 (CSI-03) is the third set of investigations in the CSI program series. The CSI program provides the K-12 community opportunities to use the unique microgravity environment of the station as part of the regular classroom to encourage learning and interest in science, technology, engineering and math. CSI-03 will examine the complete life cycle of the painted lady butterfly and the ability of an orb-weaving spider to spin a web, eat and remain healthy in space.

The JPL Electronic Nose (ENose) is a full-time, continuously operating event monitor designed to detect air contamination from spills and leaks in the crew habitat in the station. It fills the long-standing gap between onboard alarms and complex analytical instruments. ENose provides rapid, early identification and quantification of atmospheric changes caused by chemical species to which it has been trained. ENose also can be used to monitor cleanup processes after a leak or a spill.

Test of Midodrine as a Countermeasure Against Post-Flight Orthostatic Hypotension – Long (Midodrine-Long) is a test of the ability of the drug midodrine to reduce the incidence or severity of orthostatic hypotension. If successful, it will be employed as a countermeasure to the dizziness caused by the

blood pressure decrease that many astronauts experience upon returning to the Earth's gravity.

The Shear History Extensional Rheology Experiment (SHERE) is designed to investigate the effect of preshearing (rotation) on the stress and strain response of a polymeric liquid (a fluid consisting of many molecular chains) being stretched in microgravity. The fundamental understanding and measurement of the extensional rheology of complex fluids also allows Earth-based manufacturing processes to be controlled and improved.

Sleep-Wake Actigraphy and Light Exposure During Spaceflight – Long (Sleep-Long) will examine the effects of spaceflight and ambient light exposure on the sleep-wake cycles of the crew members during long-duration stays on the space station.

Space Acceleration Measurement System – II (SAMS-II) sensors called Triaxial Sensor Head-Ethernet Standalone will operate within the Combustion Integrated Rack and the Microgravity Science Glovebox facilities. These two SAMS sensors will provide acceleration data for fluid physics, material science and combustion experiments performed on the space station where the effects of gravity are important to the results of the research and affect the outcome of the research. The SAMS acceleration data provides measurement of the microgravity influence on a payload during science operations on board the station.

The Agricultural Camera (AgCam) will take frequent images, in visible and infrared light, of vegetated areas on Earth, principally of growing crops, rangeland, grasslands, forests, and wetlands in the northern Great Plains and Rocky Mountain regions of the United States. Images will be delivered within two days directly to requesting farmers, ranchers, foresters, natural resource managers and tribal officials to help improve their environmental stewardship of the land. Images also will be shared with educators for classroom use. The Agricultural Camera was built and will be operated primarily by students and faculty at the University of North Dakota, Grand Forks, N.D.

As a countermeasure to spaceflight-induced bone loss, **Bisphosphonates** will determine whether antiresorptive agents (help reduce bone loss), in conjunction with the routine in-flight exercise program, will protect station crew members from the regional decreases in bone mineral density documented on previous station missions.

Multi-User Droplet Combustion Apparatus – FLame Extinguishment Experiment (MDCA-FLEX) will assess the effectiveness of fire suppressants in microgravity and quantify the effect of different possible crew exploration atmospheres on fire suppression. The goal of this research is to provide definition and direction for large-scale fire suppression tests and selection of the fire suppressant for next-generation crew exploration vehicles.

Nutritional Status Assessment (Nutrition) is the most comprehensive in-flight study done by NASA to date of human physiologic changes during long-duration spaceflight. This includes measures of bone metabolism, oxidative damage, nutritional assessments, and hormonal changes. This study will impact both the definition of nutritional requirements and development of food systems for future space exploration missions to the moon and Mars. This experiment also will help to improve understanding of the impact of

countermeasures such as exercise and pharmaceuticals on nutritional status and nutrient requirements for astronauts.

The National Aeronautics and Space Administration Biological Specimen Repository (Repository) is a storage bank that is used to maintain biological specimens over extended periods of time and under well-controlled conditions. Biological samples from the space station, including blood and urine, will be collected, processed and archived during the preflight, in-flight and postflight phases of space station missions. This investigation has been developed to archive biosamples for use as a resource for future spaceflight-related research.

The goal of **Space-Dynamically Responding Ultrasonic Matrix System (SpaceDRUMS)** is to provide a suite of hardware capable of facilitating containerless advanced materials science, including combustion synthesis and fluid physics. That is, inside SpaceDRUMS, samples of experimental materials can be processed without ever touching a container wall.

The Smoke Point In Co-flow Experiment (SPICE) determines the point at which gas-jet flames, which are similar to a butane-lighter flame, begin to emit soot (dark carbonaceous particulate formed inside the flame) in microgravity. Studying a soot emitting flame is important in understanding the ability of fires to spread and in the control of soot in practical combustion systems space.

European Space Agency Research

Motion Perception: Vestibular Adaptation to G-Transitions (MOP) seeks to obtain insight into the process of vestibular adaptation to gravity transitions and to correlate the cosmonauts' susceptibility to the Space Adaptation Syndrome (SAS) with the susceptibility to Sickness Induced by Centrifugation (SIC).

The **Study of Lower Back Pain in Crewmembers During Space Flight (Mus)** studies the details on development of Low Back Pain (LBP) during flight in astronauts and cosmonauts. According to the biomechanical model, strain on the ilio-lumbar ligaments increases with backward tilt of the pelvis combined with forward flexion of the spine. This is what astronauts may experience due to loss of spinal curvature in space. The objective is to assess astronaut deep muscle corset atrophy in response to microgravity exposure.

Japan Aerospace Exploration Agency Research

The **Study on Microgravity Effect for Pattern Formation of Dendritic Crystal by a Method of in-situ Observation (Ice Crystal)** will precisely analyze the factors concerning the pattern formation of crystal growth, an ice crystal growing freely in supercooled bulk water, in-situ, using an interference microscope under microgravity condition, in which the free convection in the growth chamber cannot occur. Three-dimensional patterns of ice crystals and the thermal diffusion field around the crystal will be analyzed from the experimental results.

Changes in LOH Profile of TK mutants of Human Cultured Cells (LOH) – Gene Expression of p53-Regulated Genes in Mammalian Cultured Cells After Exposure to Space Environment (RadGene) is a two-part investigation addressing genetic alterations in immature immune cells. LOH uses immature immune, or lymphoblastoid, cells to detect

potential changes on the chromosome after exposure to cosmic radiation. RadGene looks for changes in gene expression of p53, a tumor suppressive protein, after cosmic radiation exposure.

Commercial Payload Program (Commercial) is a to-be-determined commercial investigation sponsored by the Japan Aerospace and Exploration Agency.

U.S. INTEGRATED INTERNATIONAL SPACE STATION FACILITIES TO BE DELIVERED ON STS-126

EXpedite the PRocessing of Experiments to Space Station Rack 6 (EXPRESS Rack 6) are multipurpose payload rack systems that store and support experiments aboard the space station. The EXPRESS Rack system supports science experiments in any discipline by providing structural interfaces, power, data, cooling, water and other items needed to operate science experiments in space.

The **Combustion Integrated Rack (CIR)** is one of two racks being developed for the Fluids and Combustion Facility (FCF) on the space station. CIR will be customizable so it can be used in different scenarios and experiments; it will first operate independently, then together with other components of the FCF. Fluids and combustion science experiments aboard the space station are very sensitive to disruption from undesired vibrations. CIR will protect the samples from vibrations using the Passive Rack Isolation System (PaRIS).

EXPRESS Rack 6

This page intentionally blank

ADVANCED RESISTIVE EXERCISE DEVICE

Earth-based studies have demonstrated the effectiveness of high-load resistive exercise to prevent musculoskeletal deconditioning. The advanced Resistive Exercise Device (aRED) was developed to improve existing International Space Station exercise capabilities by providing more complete protection to the musculoskeletal system during long-duration spaceflight. Specifically, the aRED uses vacuum cylinders to provide a concentric workloads up to 600 pounds, with an eccentric load up to 90 percent of the concentric force. The aRED also provides feedback to the astronaut during use and data to the NASA exercise physiologists monitoring crew member prescriptions. The original space station countermeasure equipment, an interim Resistive Exercise Device (iRED), has no feedback to the user with functional limitations of 300 pounds concentric loading and only 60 percent eccentric force.

The aRED mimics the force loading characteristics of traditional resistive exercises (weighted bars or dumbbells) by providing a more constant force throughout the range of motion using inertial flywheels in the load path of vacuum cylinders to simulate the characteristics of free weight exercise.

The aRED is part of the mandatory in-flight exercise countermeasures program and will be used up to six days a week during a mission in combination with treadmill and cycle ergometer exercises to prevent deconditioning of astronauts. It offers traditional upper and lower-body exercises, such as squats, dead lift, heel raises, bicep curls, bench press, and many others. Flight surgeons, trainers and physiologists expect that the greater loads provided by aRED will result in more efficient and effective exercise, thereby preventing the muscle and bone loss that astronauts sometimes experience during long space missions.

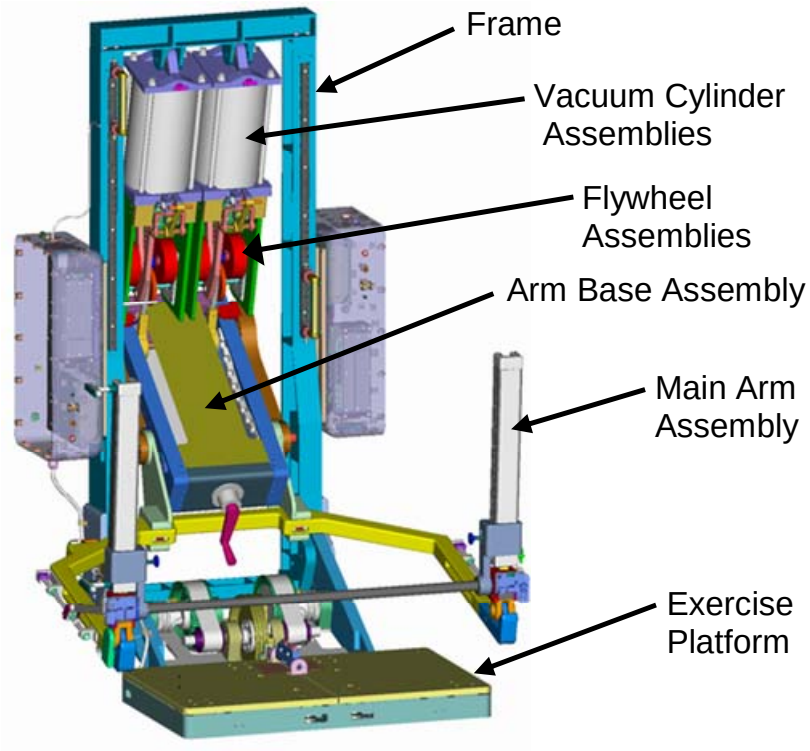

advanced Resistive Exercise Device (aRED)

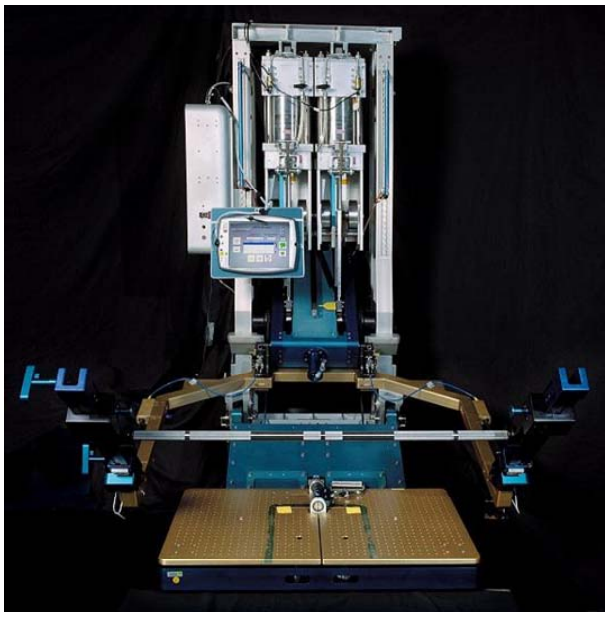

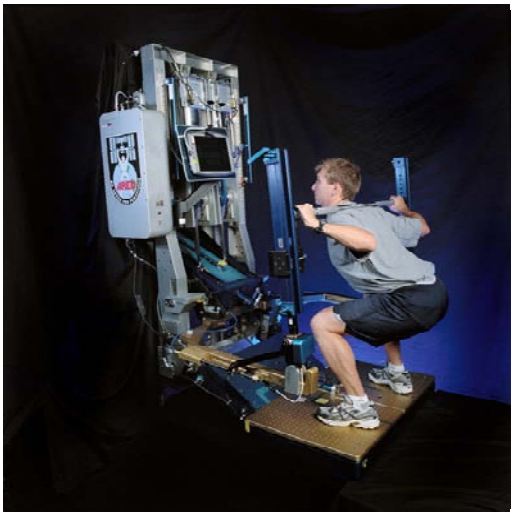

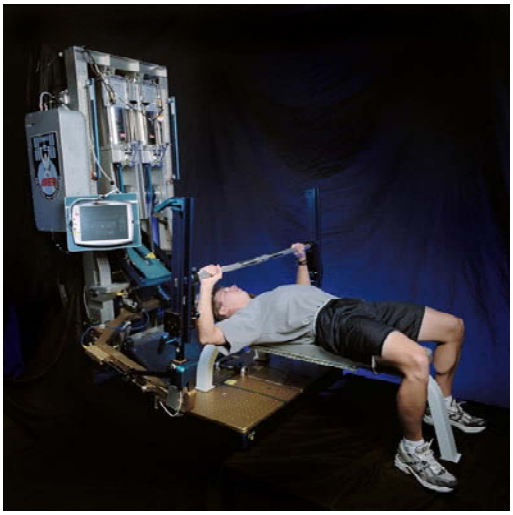

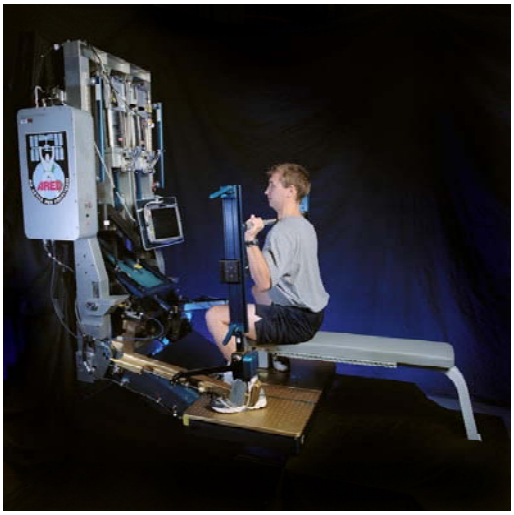

This page intentionally blank

SHUTTLE REFERENCE DATA

SHUTTLE ABORT MODES

Redundant Sequence Launch Sequencer (RSLS) Aborts

These occur when the on-board shuttle computers detect a problem and command a halt in the launch sequence after taking over from the ground launch sequencer and before solid rocket booster ignition.

Ascent Aborts

Selection of an ascent abort mode may become necessary if there is a failure that affects vehicle performance, such as the failure of a space shuttle main engine or an orbital maneuvering system engine. Other failures requiring early termination of a flight, such as a cabin leak, might also require the selection of an abort mode. There are two basic types of ascent abort modes for space shuttle missions: intact aborts and contingency aborts. Intact aborts are designed to provide a safe return of the orbiter to a planned landing site. Contingency aborts are designed to permit flight crew survival following more severe failures when an intact abort is not possible. A contingency abort would generally result in a ditch operation.

Intact Aborts

There are four types of intact aborts: abort to orbit (ATO), abort once around (AOA), transoceanic abort landing (TAL) and return to launch site (RTLS).

Return to Launch Site

The RTLS abort mode is designed to allow the return of the orbiter, crew, and payload to the launch site, KSC, approximately 25 minutes after liftoff.

The RTLS profile is designed to accommodate the loss of thrust from one space shuttle main engine between liftoff and approximately four minutes 20 seconds, after which not enough main propulsion system propellant remains to return to the launch site. An RTLS can be considered to consist of three stages – a powered stage, during which the space shuttle main engines are still thrusting; an external tank separation phase; and the glide phase, during which the orbiter glides to a landing at the KSC. The powered RTLS phase begins with the crew selection of the RTLS abort, after solid rocket booster separation. The crew selects the abort mode by positioning the abort rotary switch to RTLS and depressing the abort push button. The time at which the RTLS is selected depends on the reason for the abort. For example, a three-engine RTLS is selected at the last moment, about 3 minutes, 34 seconds into the mission; whereas an RTLS chosen due to an engine out at liftoff is selected at the earliest time, about 2 minutes, 20 seconds into the mission (after solid rocket booster separation).

After RTLS is selected, the vehicle continues downrange to dissipate excess main propulsion system propellant. The goal is to leave only enough main propulsion system propellant to be able to turn the vehicle around, fly back toward the KSC and achieve the proper main engine cutoff conditions so the vehicle can glide to the KSC after external tank separation. During the downrange phase, a pitch-around maneuver is initiated (the time depends in part on the time of a space shuttle main engine failure) to orient the orbiter/external tank configuration to a heads-up attitude, pointing toward the launch site. At this time, the vehicle is still moving away from the launch site, but

the space shuttle main engines are now thrusting to null the downrange velocity. In addition, excess orbital maneuvering system and reaction control system propellants are dumped by continuous orbital maneuvering system and reaction control system engine thrustings to improve the orbiter weight and center of gravity for the glide phase and landing.

The vehicle will reach the desired main engine cutoff point with less than 2 percent excess propellant remaining in the external tank. At main engine cutoff minus 20 seconds, a pitch down maneuver (called powered pitch-down) takes the mated vehicle to the required external tank separation attitude and pitch rate. After main engine cutoff has been commanded, the external tank separation sequence begins, including a reaction control system maneuver that ensures that the orbiter does not recontact the external tank and that the orbiter has achieved the necessary pitch attitude to begin the glide phase of the RTLS.

After the reaction control system maneuver has been completed, the glide phase of the RTLS begins. From then on, the RTLS is handled similarly to a normal entry.

Transoceanic Abort Landing

The TAL abort mode was developed to improve the options available when a space shuttle main engine fails after the last RTLS opportunity but before the first time that an AOA can be accomplished with only two space shuttle main engines or when a major orbiter system failure, for example, a large cabin pressure leak or cooling system failure, occurs after the last RTLS opportunity, making it imperative to land as quickly as possible.

In a TAL abort, the vehicle continues on a ballistic trajectory across the Atlantic Ocean to land at a predetermined runway. Landing occurs about 45 minutes after launch. The landing site is selected near the normal ascent ground track of the orbiter to make the most efficient use of space shuttle main engine propellant. The landing site also must have the necessary runway length, weather conditions and U.S. State Department approval. The three landing sites that have been identified for a launch are Zaragoza, Spain; Moron, Spain; and Istres, France.

To select the TAL abort mode, the crew must place the abort rotary switch in the TAL/AOA position and depress the abort push button before main engine cutoff (Depressing it after main engine cutoff selects the AOA abort mode). The TAL abort mode begins sending commands to steer the vehicle toward the plane of the landing site. It also rolls the vehicle heads up before main engine cutoff and sends commands to begin an orbital maneuvering system propellant dump (by burning the propellants through the orbital maneuvering system engines and the reaction control system engines). This dump is necessary to increase vehicle performance (by decreasing weight) to place the center of gravity in the proper place for vehicle control and to decrease the vehicle's landing weight. TAL is handled like a normal entry.

Abort to Orbit

An ATO is an abort mode used to boost the orbiter to a safe orbital altitude when performance has been lost and it is impossible to reach the planned orbital altitude. If a space shuttle main engine fails in a region that results in a main engine cutoff under speed, the MCC will determine that an abort mode is necessary

and will inform the crew. The orbital maneuvering system engines would be used to place the orbiter in a circular orbit.

Abort Once Around

The AOA abort mode is used in cases in which vehicle performance has been lost to such an extent that either it is impossible to achieve a viable orbit or not enough orbital maneuvering system propellant is available to accomplish the orbital maneuvering system thrusting maneuver to place the orbiter on orbit and the deorbit thrusting maneuver. In addition, an AOA is used in cases in which a major systems problem (cabin leak, loss of cooling) makes it necessary to land quickly. In the AOA abort mode, one orbital maneuvering system thrusting sequence is made to adjust the post-main engine cutoff orbit so a second orbital maneuvering system thrusting sequence will result in the vehicle deorbiting and landing at the AOA landing site (White Sands, N.M.; Edwards Air Force Base, Calif.; or the Kennedy Space Center, Fla). Thus, an AOA results in the orbiter circling the Earth once and landing about 90 minutes after liftoff.

After the deorbit thrusting sequence has been executed, the flight crew flies to a landing at the planned site much as it would for a nominal entry.

Contingency Aborts

Contingency aborts are caused by loss of more than one main engine or failures in other systems. Loss of one main engine while another is stuck at a low thrust setting also may necessitate a contingency abort. Such an abort would maintain orbiter integrity for in-flight crew escape if a landing cannot be achieved at a suitable landing field.

Contingency aborts due to system failures other than those involving the main engines would normally result in an intact recovery of vehicle and crew. Loss of more than one main engine may, depending on engine failure times, result in a safe runway landing. However, in most three-engine-out cases during ascent, the orbiter would have to be ditched. The inflight crew escape system would be used before ditching the orbiter.

Abort Decisions

There is a definite order of preference for the various abort modes. The type of failure and the time of the failure determine which type of abort is selected. In cases where performance loss is the only factor, the preferred modes are ATO, AOA, TAL and RTLS, in that order. The mode chosen is the highest one that can be completed with the remaining vehicle performance.

In the case of some support system failures, such as cabin leaks or vehicle cooling problems, the preferred mode might be the one that will end the mission most quickly. In these cases, TAL or RTLS might be preferable to AOA or ATO. A contingency abort is never chosen if another abort option exists.

Mission Control Houston is prime for calling these aborts because it has a more precise knowledge of the orbiter's position than the crew can obtain from on-board systems. Before main engine cutoff, Mission Control makes periodic calls to the crew to identify which abort mode is (or is not) available. If ground communications are lost, the flight crew has on-board methods, such as cue cards, dedicated displays and display information, to determine the abort region. Which abort mode is selected depends on the cause and timing of the failure causing the abort and which mode is safest or

improves mission success. If the problem is a space shuttle main engine failure, the flight crew and Mission Control Center select the best option available at the time a main engine fails.

If the problem is a system failure that jeopardizes the vehicle, the fastest abort mode that results in the earliest vehicle landing is chosen. RTLS and TAL are the quickest options (35 minutes), whereas an AOA requires about 90 minutes. Which of these is selected depends on the time of the failure with three good space shuttle main engines.

The flight crew selects the abort mode by positioning an abort mode switch and depressing an abort push button.

SHUTTLE ABORT HISTORY

RSLS Abort History

(STS-41 D) June 26, 1984

The countdown for the second launch attempt for Discovery's maiden flight ended at T-4 seconds when the orbiter's computers detected a sluggish valve in main engine No. 3. The main engine was replaced and Discovery was finally launched on Aug. 30, 1984.

(STS-51 F) July 12, 1985

The countdown for Challenger's launch was halted at T-3 seconds when on-board computers detected a problem with a coolant valve on main engine No. 2. The valve was replaced and Challenger was launched on July 29, 1985.

(STS-55) March 22, 1993

The countdown for Columbia's launch was halted by on-board computers at T-3 seconds following a problem with purge pressure readings in the oxidizer preburner on main engine No. 2. Columbia's three main engines were replaced on the launch pad, and the flight was rescheduled behind Discovery's launch on STS-56. Columbia finally launched on April 26, 1993.

(STS-51) Aug. 12, 1993

The countdown for Discovery's third launch attempt ended at the T-3 second mark when onboard computers detected the failure of one of four sensors in main engine No. 2 which monitor the flow of hydrogen fuel to the engine. All of Discovery's main engines were ordered replaced on the launch pad, delaying the shuttle's fourth launch attempt until Sept. 12, 1993.

(STS-68) Aug. 18, 1994

The countdown for Endeavour's first launch attempt ended 1.9 seconds before liftoff when on-board computers detected higher than acceptable readings in one channel of a sensor monitoring the discharge temperature of the high pressure oxidizer turbopump in main engine No. 3. A test firing of the engine at the Stennis Space Center in Mississippi on September 2nd confirmed that a slight drift in a fuel flow meter in the engine caused a slight increase in the turbopump's temperature. The test firing also confirmed a slightly slower start for main engine No. 3 during the pad abort, which could have contributed to the higher temperatures. After Endeavour was brought back to the Vehicle Assembly Building to be outfitted with three replacement engines, NASA managers set Oct. 2 as the date for Endeavour's second launch attempt.

Abort to Orbit History

(STS-51 F) July 29, 1985

After an RSLS abort on July 12, 1985, Challenger was launched on July 29, 1985.

Five minutes and 45 seconds after launch, a sensor problem resulted in the shutdown of center engine No. 1, resulting in a safe "abort to orbit" and successful completion of the mission.

SPACE SHUTTLE MAIN ENGINES

Developed in the 1970s by NASA's Marshall Space Flight Center, MSFC in Huntsville, Ala., the space shuttle main engine is the most advanced liquid-fueled rocket engine ever built. Every space shuttle main engine is tested and proven flight worthy at NASA's Stennis Space Center in south Mississippi, before installation on an orbiter. Its main features include variable thrust, high performance reusability, high redundancy and a fully integrated engine controller.

The shuttle's three main engines are mounted on the orbiter aft fuselage in a triangular pattern. Spaced so that they are movable during launch, the engines are used, in conjunction with the solid rocket boosters, to steer the shuttle vehicle.

Each of these powerful main engines is 14 feet long, weighs about 7,000 pounds and is 7.5 feet in diameter at the end of its nozzle.

The engines operate for about 8.5 minutes during liftoff and ascent, burning more than 500,000 gallons of super-cold liquid hydrogen and liquid oxygen propellants stored in the external tank attached to the underside of the shuttle. The engines shut down just before the shuttle, traveling at about 17,000 miles per hour, reaches orbit.

The main engine operates at greater temperature extremes than any mechanical system in common use today. The fuel, liquefied hydrogen at -423 degrees Fahrenheit, is the second coldest liquid on Earth. When it and the liquid oxygen are combusted, the temperature in the main combustion chamber is 6,000 degrees Fahrenheit, hotter than the boiling point of iron.

The main engines use a staged combustion cycle so that all propellants entering the engines are used to produce thrust, or power, more efficiently than any previous rocket engine. In a staged combustion cycle, propellants are first burned partially at high pressure and relatively low temperature, and then burned completely at high temperature and pressure in the main combustion chamber. The rapid mixing of the propellants under these conditions is so complete that 99 percent of the fuel is burned.

At normal operating level, each engine generates 490,847 pounds of thrust, measured in a vacuum. Full power is 512,900 pounds of thrust; minimum power is 316,100 pounds of thrust.

The engine can be throttled by varying the output of the pre-burners, thus varying the speed of the high-pressure turbopumps and, therefore, the flow of the propellant.

At about 26 seconds into ascent, the main engines are throttled down to 316,000 pounds of thrust to keep the dynamic pressure on the vehicle below a specified level,about 580 pounds per square foot, known as max q. Then, the engines are throttled back up to normal operating level at about 60 seconds. This reduces stress on the vehicle. The main engines are throttled down again at about seven minutes, 40 seconds into the mission to maintain three g's, three times the Earth's gravitational pull, reducing stress on the crew and the vehicle. This acceleration level is about one-third the acceleration experienced on previous crewed space vehicles.

About 10 seconds before main engine cutoff, or MECO, the cutoff sequence begins. About three seconds later the main engines are commanded to begin throttling at 10 percent thrust per second until they achieve 65 percent thrust. This is held for about 6.7 seconds, and the engines are shut down.

The engine performance has the highest thrust for its weight of any engine yet developed. In fact, one space shuttle main engine generates sufficient thrust to maintain the flight of two and one-half Boeing 747 airplanes.

The space shuttle main engine also is the first rocket engine to use a built-in electronic digital controller, or computer. The controller accepts commands from the orbiter for engine start, change in throttle, shutdown and monitoring of engine operation.

NASA continues to increase the reliability and safety of shuttle flights through a series of enhancements to the space shuttle main engines. The engines were modified in 1988, 1995, 1998, 2001 and 2007. Modifications include new high-pressure fuel and oxidizer turbopumps that reduce maintenance and operating costs of the engine, a two-duct powerhead that reduces pressure and turbulence in the engine, and a single-coil heat exchanger that lowers the number of post flight inspections required. Another modification incorporates a large-throat main combustion chamber that improves the engine's reliability by reducing pressure and temperature in the chamber.

The most recent engine enhancement is the Advanced Health Management System, or AHMS, which made its first flight in 2007. AHMS is a controller upgrade that provides new monitoring and insight into the health of the two most complex components of the space shuttle main engine—the high pressure fuel turbopump and the high pressure oxidizer turbopump. New advanced digital signal processors monitor engine vibration and have the ability to shut down an engine if vibration exceeds safe limits. AHMS was developed by engineers at Marshall.

After the orbiter lands, the engines are removed and returned to a processing facility at Kennedy Space Center, Fla., where they are rechecked and readied for the next flight. Some components are returned to the main engine's prime contractor, Pratt & Whitney Rocketdyne, West Palm Beach, Fla., for regular maintenance. The main engines are designed to operate for 7.5 accumulated hours.

SPACE SHUTTLE SOLID ROCKET BOOSTERS

The combination of reusable solid rocket motor segments and solid rocket booster subassemblies makes up the flight configuration of the space shuttle solid rocket boosters, or SRBs. The two SRBs provide the main thrust to lift the space shuttle off the launch pad and up to an altitude of about 150,000 feet, or 28 miles. The two SRBs carry the entire weight of the external tank and orbiter and transmit the weight load through their structure to the mobile launcher platform.

The primary elements of each booster are the motor, including case, propellant, igniter and nozzle; separation systems; operational flight instrumentation; recovery avionics; pyrotechnics; deceleration system; thrust vector control system; and range safety destruct system.

Each booster is attached to the external tank at the SRB aft frame by two lateral sway braces and a diagonal attachment. The forward end of each SRB is attached to the external tank at the forward end of the SRB forward skirt. On the launch pad, each booster also is attached to the mobile launcher platform at the aft skirt by four bolts and nuts that are severed by small explosives at liftoff.

Each booster has a sea level thrust of about 3.3 million pounds at launch. The SRBs are ignited after the three space shuttle main engines' thrust level is verified. They provide 71.4 percent of the thrust at liftoff and during first-stage ascent. Seventy-five seconds after separation, SRB apogee occurs at an altitude of about 220,000 feet, or 40 miles. Impact occurs in the ocean about 140 miles downrange.

The SRBs are used as matched pairs, each made up of four solid rocket motor segments. They are matched by loading each of the four motor segments from the same batches of propellant ingredients to minimize any thrust imbalance. The segmented-casing design assures maximum flexibility in fabrication and ease of transportation and handling. Each segment is shipped to the launch site on a heavy-duty rail car with a specially built cover.

Reusable Solid Rocket Motor (RSRM)

ATK Launch Systems of Brigham City, Utah, manufactures the Space Shuttle Reusable Solid Rocket Motor (RSRM) at its Utah facility. The RSRM is the largest solid rocket motor ever to fly, the only solid rocket motor rated for human flight and the first designed for reuse, one of the most important cost-saving factors in the nation's space program.

Each RSRM consists of four rocket motor segments, thrust vector control and an aft exit cone assembly. Each motor is just over 126 feet long and 12 feet in diameter. Of the motor's total weight of 1.25 million pounds, propellant accounts for 1.1 million pounds. Approximately 110,000 quality-control inspections, in addition to static tests, are conducted on each RSRM flight set to verify flawless operation.

Each space shuttle launch requires the boost of two RSRMs to lift the 4.5-million-pound shuttle vehicle. From ignition to the end of burn, about 123 seconds later, each RSRM generates an average thrust of 2.6 million pounds. By the time the twin SRBs have completed their task, the space shuttle orbiter has reached an altitude of 28 miles and is traveling at a speed in excess of 3,000 miles per hour. Before retirement, each RSRM can be used as many as 20 times.

The propellant mixture in each SRB motor consists of: ammonium perchlorate, an oxidizer; aluminum fuel; iron oxide, a catalyst; a polymer, which is a binder that holds the mixture together; and an epoxy curing agent. The propellant has the consistency of a pencil eraser. It has a molded internal geometry designed to provide required performance. This configuration provides high thrust at ignition and then reduces the thrust by about one-third 50 seconds after liftoff to prevent overstressing the vehicle during maximum dynamic pressure.

The RSRM segments are shipped by rail from ATK's Utah facility to the Kennedy Space Center, Fla. At KSC, United Space Alliance joins the segments with the forward assembly, aft skirt, frustum, and nose cap. The subassemblies contain the booster guidance system, the hydraulics system that steers the nozzles, Booster Separation Motors built by ATK, and parachutes.

Following the Challenger accident, detailed structural analyses were performed on critical structural elements of the SRB. Analyses were primarily focused in areas where anomalies had been noted during postflight inspection of recovered hardware.

One of these areas was the attach ring where the SRBs connect to the external tank. Areas of distress were noted in some of the fasteners where the ring attaches to the SRB motor case. The distress was attributed to the high loads encountered during water impact. To correct the situation and ensure higher strength margins during ascent, the attach ring was redesigned to encircle the motor case completely. Previously, the attach ring formed a "C" and encircled the motor case 270 degrees.

Additionally, special structural tests were done on the aft skirt. During this test program, an anomaly occurred in a critical weld between the hold-down post and skin of the skirt. A redesign was implemented to add reinforcement brackets and fittings in the aft ring of the skirt.

These two modifications added about 450 pounds to the weight of each SRB.

Beginning with the STS-8 mission, the nozzle expansion ratio of each booster is 7-to-79. The nozzle is gimbaled for thrust vector, or direction, control. Each SRB has its own redundant auxiliary power units and hydraulic pumps. The all-axis gimbaling capability is 8 degrees. Each nozzle has a carbon cloth liner that erodes and chars during firing. The nozzle is a convergent-divergent, movable design in which an aft pivot-point flexible bearing is the gimbal mechanism.

The cone-shaped aft skirt supports the weight of the entire vehicle as it rests on the mobile launcher platform. The four aft separation motors are mounted on the skirt. The aft section contains: avionics; a thrust vector control system that consists of two auxiliary power units and hydraulic pumps; hydraulic systems; and a nozzle extension jettison system.

The forward section of each booster contains avionics, a sequencer, forward separation motors, a nose cone separation system, drogue and main parachutes, a recovery beacon, a recovery light, a parachute camera on selected flights and a range safety system.

Each SRB has two integrated electronic assemblies, one forward and one aft. After burnout, the forward assembly turns on the recovery aids and initiates the release of the nose cap and frustum, a transition piece between the nose cone and solid rocket motor. The aft assembly, mounted in the external tank-to-SRB attach ring, connects with the forward assembly and the shuttle avionics systems for SRB ignition commands and nozzle thrust vector control. Each integrated electronic assembly has a multiplexer/demultiplexer, which sends or receives more than one message, signal or unit of information on a single communication channel.

Eight Booster Separation Motors, four in the nose frustum and four in the aft skirt of each SRB, thrust for 1.02 seconds when the SRBs separate from the external tank. Each solid rocket separation motor is 31.1 inches long and 12.8 inches in diameter.

After separation from the tank, the boosters descend. At a predetermined altitude, parachutes are deployed to decelerate them for a safe splashdown in the ocean. Just prior to splashdown, the aft exit cones, or nozzle extensions, are separated from the vehicles to

reduce water impact loads. Splashdown occurs approximately 162 miles from the launch site.

Location aids are provided for each SRB, frustum and drogue chutes, and main parachutes. These include a transmitter, antenna, strobe/converter, battery and salt-water switch electronics. The location aids are designed for a minimum operating life of 72 hours and, when refurbished, are considered usable up to 20 times. The flashing light is an exception. It has an operating life of 280 hours. The battery is used only once.

The recovery crew retrieves the SRBs, frustum and drogue chutes, and main parachutes. The nozzles are plugged, the solid rocket motors are dewatered, and the SRBs are towed back to the launch site. Each booster is removed from the water, and its components are disassembled and washed with fresh and deionized water to limit salt-water corrosion. The motor segments, igniter and nozzle are shipped back to ATK in Utah for refurbishment. The SRB nose caps and nozzle extensions are not recovered.

Each SRB incorporates a range safety system that includes a battery power source, receiver and decoder, antennas, and ordnance.

Hold-Down Posts

Each SRB has four hold-down posts that fit into corresponding support posts on the mobile launcher platform. Hold-down bolts secure the SRB and launcher platform posts together. Each bolt has a nut at each end, but only the top nut is frangible. The top nut contains two NASA standard detonators, or NSDs, which are ignited at solid rocket motor ignition commands.

When the two NSDs are ignited at each hold-down, the hold-down bolt travels downward because of the release of tension in the bolt (pretensioned before launch), NSD gas pressure and gravity. The bolt is stopped by the stud deceleration stand, which contains sand. The SRB bolt is 28 inches long and 3.5 inches in diameter. The frangible nut is captured in a blast container.

The solid rocket motor ignition commands are issued by the orbiter's computers through the master events controllers to the hold-down pyrotechnic initiator controllers, or PICs, on the mobile launcher platform. They provide the ignition to the hold-down NSDs. The launch processing system monitors the SRB hold-down PICs for low voltage during the last 16 seconds before launch. PIC low voltage will initiate a launch hold.

SRB Ignition

SRB ignition can occur only when a manual lock pin from each SRB safe and arm device has been removed. The ground crew removes the pin during prelaunch activities. At T minus five minutes, the SRB safe and arm device is rotated to the arm position. The solid rocket motor ignition commands are issued when the three SSMEs are at or above 90 percent rated thrust, no SSME fail and/or SRB ignition PIC low voltage is indicated, and there are no holds from the Launch Processing System, or LPS.

The solid rocket motor ignition commands are sent by the orbiter computers through the master events controllers, or MECs, to the safe and arm device NSDs in each SRB. A programmable interval clock, or PIC, single-channel capacitor discharge device controls the firing of each pyrotechnic device. Three signals must be present simultaneously for the PIC to generate the pyro firing output. These signals – arm, fire 1 and fire 2 – originate

in the orbiter General Purpose Computers, or GPCs, and are transmitted to the MECs. The MECs reformat them to 28-volt dc signals for the programmable interval clock. The arm signal charges the PIC capacitor to 40 volts dc.

The fire 2 commands cause the redundant NSDs to fire through a thin barrier seal down a flame tunnel. This ignites a pyro booster charge, which is retained in the safe and arm device behind a perforated plate. The booster charge ignites the propellant in the igniter initiator; and combustion products of this propellant ignite the solid rocket motor initiator, which fires down the length of the solid rocket motor, igniting the solid rocket motor propellant.

The GPC launch sequence also controls certain critical main propulsion system valves and monitors the engine-ready indications from the SSMEs. The Main Propulsion System, or MPS, start commands are issued by the on-board computers at T minus 6.6 seconds in a staggered start – engine three, engine two, engine one – all about within 0.25 of a second, and the sequence monitors the thrust buildup of each engine. All three SSMEs must reach the required 90 percent thrust within three seconds, otherwise, an orderly shutdown is commanded and safing functions are initiated.

Normal thrust buildup to the required 90 percent thrust level will result in the SSMEs being commanded to the liftoff position at T minus three seconds as well as the fire 1 command being issued to arm the SRBs. At T minus three seconds, the vehicle base bending load modes are allowed to initialize, with a movement of 25.5 inches measured at the tip of the external tank, with movement towards the external tank.

At T minus zero, the two SRBs are ignited under command of the four onboard computers; separation of the four explosive bolts on each SRB is initiated; the two T-0 umbilicals, one on each side of the spacecraft, are retracted; the onboard master timing unit, event timer and mission event timers are started; the three SSMEs are at 100 percent; and the ground launch sequence is terminated.

The solid rocket motor thrust profile is tailored to reduce thrust during the maximum dynamic pressure region.

Electrical Power Distribution

Electrical power distribution in each SRB consists of orbiter-supplied main dc bus power to each SRB via SRB buses A, B and C. In addition, orbiter main dc bus C supplies backup power to SRB buses A and B, and orbiter bus B supplies backup power to SRB bus C. This electrical power distribution arrangement allows all SRB buses to remain powered in the event one orbiter main bus fails.

The nominal dc voltage is 28 volts dc, with an upper limit of 32 volts dc and a lower limit of 24 volts dc.

Hydraulic Power Units

There are two self-contained, independent HPUs on each SRB. Each HPU consists of an auxiliary power unit, fuel supply module, hydraulic pump, hydraulic reservoir and hydraulic fluid manifold assembly. The auxiliary power units, or APUs, are fueled by hydrazine and generate mechanical shaft power to a hydraulic pump that produces hydraulic pressure for the SRB hydraulic system. The two separate HPUs and two hydraulic systems are located on the aft end of each SRB between the SRB nozzle and aft skirt. The HPU components

are mounted on the aft skirt between the rock and tilt actuators. The two systems operate from T minus 28 seconds until SRB separation from the orbiter and external tank. The two independent hydraulic systems are connected to the rock and tilt servoactuators.

The APU controller electronics are located in the SRB aft integrated electronic assemblies on the aft external tank attach rings.

The APUs and their fuel systems are isolated from each other. Each fuel supply module tank contains 22 pounds of hydrazine. The fuel tank is pressurized with gaseous nitrogen at 400 psi, which provides the force to expel the fuel from the tank to the fuel distribution line, maintaining a positive fuel supply to the APU throughout its operation.

The fuel isolation valve is opened at APU startup to allow fuel to flow to the APU fuel pump and control valves and then to the gas generator. The gas generator's catalytic action decomposes the fuel and creates a hot gas. It feeds the hot gas exhaust product to the APU two-stage gas turbine. Fuel flows primarily through the startup bypass line until the APU speed is such that the fuel pump outlet pressure is greater than the bypass line's. Then all the fuel is supplied to the fuel pump.

The APU turbine assembly provides mechanical power to the APU gearbox. The gearbox drives the APU fuel pump, hydraulic pump and lube oil pump. The APU lube oil pump lubricates the gearbox. The turbine exhaust of each APU flows over the exterior of the gas generator, cooling it, and is then directed overboard through an exhaust duct.

When the APU speed reaches 100 percent, the APU primary control valve closes, and the APU speed is controlled by the APU controller electronics. If the primary control valve logic fails to the open state, the secondary control valve assumes control of the APU at 112 percent speed. Each HPU on an SRB is connected to both servoactuators on that SRB. One HPU serves as the primary hydraulic source for the servoactuator, and the other HPU serves as the secondary hydraulics for the servoactuator. Each servoactuator has a switching valve that allows the secondary hydraulics to power the actuator if the primary hydraulic pressure drops below 2,050 psi. A switch contact on the switching valve will close when the valve is in the secondary position. When the valve is closed, a signal is sent to the APU controller that inhibits the 100 percent APU speed control logic and enables the 112 percent APU speed control logic. The 100 percent APU speed enables one APU/HPU to supply sufficient operating hydraulic pressure to both servoactuators of that SRB.

The APU 100 percent speed corresponds to 72,000 rpm, 110 percent to 79,200 pm, and 112 percent to 80,640 rpm.

The hydraulic pump speed is 3,600 rpm and supplies hydraulic pressure of 3,050, plus or minus 50, psi. A high-pressure relief valve provides overpressure protection to the hydraulic system and relieves at 3,750 psi.

The APUs/HPUs and hydraulic systems are reusable for 20 missions.

Thrust Vector Control

Each SRB has two hydraulic gimbal servoactuators, one for rock and one for tilt. The servoactuators provide the force and control to gimbal the nozzle for thrust vector control.

The space shuttle ascent thrust vector control, or ATVC, portion of the flight control system directs the thrust of the three shuttle main engines and the two SRB nozzles to control shuttle attitude and trajectory during liftoff and ascent. Commands from the guidance system are transmitted to the ATVC drivers, which transmit signals proportional to the commands to each servoactuator of the main engines and SRBs. Four independent flight control system channels and four ATVC channels control six main engine and four SRB ATVC drivers, with each driver controlling one hydraulic port on each main and SRB servoactuator.

Each SRB servoactuator consists of four independent, two-stage servovalves that receive signals from the drivers. Each servovalve controls one power spool in each actuator, which positions an actuator ram and the nozzle to control the direction of thrust.

The four servovalves in each actuator provide a force-summed majority voting arrangement to position the power spool. With four identical commands to the four servovalves, the actuator force-sum action prevents a single erroneous command from affecting power ram motion. If the erroneous command persists for more than a predetermined time, differential pressure sensing activates a selector valve to isolate and remove the defective servovalve hydraulic pressure, permitting the remaining channels and servovalves to control the actuator ram spool.

Failure monitors are provided for each channel to indicate which channel has been bypassed. An isolation valve on each channel provides the capability of resetting a failed or bypassed channel.

Each actuator ram is equipped with transducers for position feedback to the thrust vector control system. Within each servoactuator ram is a splashdown load relief assembly to cushion the nozzle at water splashdown and prevent damage to the nozzle flexible bearing.

SRB Rate Gyro Assemblies

Each SRB contains two RGAs, with each RGA containing one pitch and one yaw gyro. These provide an output proportional to angular rates about the pitch and yaw axes to the orbiter computers and guidance, navigation and control system during first-stage ascent flight in conjunction with the orbiter roll rate gyros until SRB separation. At SRB separation, a switchover is made from the SRB RGAs to the orbiter RGAs.

The SRB RGA rates pass through the orbiter flight aft multiplexers/demultiplexers to the orbiter GPCs. The RGA rates are then mid-value-selected in redundancy management to provide SRB pitch and yaw rates to the user software. The RGAs are designed for 20 missions.

SRB Separation

SRB separation is initiated when the three solid rocket motor chamber pressure transducers are processed in the redundancy management middle value select and the head-end chamber pressure of both SRBs is less than or equal to 50 psi. A backup cue is the time elapsed from booster ignition.

The separation sequence is initiated, commanding the thrust vector control actuators to the null position and putting the main propulsion system into a second stage configuration 0.8 second from sequence initialization, which ensures the thrust of each SRB is less than 100,000 pounds. Orbiter yaw

attitude is held for four seconds, and SRB thrust drops to less than 60,000 pounds. The SRBs separate from the external tank within 30 milliseconds of the ordnance firing command.

The forward attachment point consists of a ball on the SRB and socket on the external tank held together by one bolt. The bolt contains one NSD pressure cartridge at each end. The forward attachment point also carries the Range Safety System, or RSS, cross-strap wiring connecting each SRB RSS and the ET RSS with each other.

The aft attachment points consist of three separate struts, upper, diagonal, and lower. Each strut contains one bolt with an NSD pressure cartridge at each end. The upper strut also carries the umbilical interface between its SRB and the external tank and on to the orbiter.

There are four Booster Separation Motors, or BSMs on each end of each SRB. The BSMs separate the SRBs from the external tank. The solid rocket motors in each cluster of four are ignited by firing redundant NSD pressure cartridges into redundant confined detonating fuse manifolds. The separation commands issued from the orbiter by the SRB separation sequence initiate the redundant NSD pressure cartridge in each bolt and ignite the BSMs to achieve a clean separation

SRB Cameras

A new camera, the External Tank Observation Camera, was added on the first Return to Flight mission. Named because it was originally certified to give NASA engineers a closer look at the insulating foam on the external tank's inter-tank, the mid-section that joins the liquid hydrogen and liquid oxygen tanks. It consists of an off-the-shelf SuperCircuits PC 17 video camera and Sony mini-DV tape recorder positioned in each forward skirt section of the two boosters and offers a view of the Orbiter's nose, the tank's intertank and, at separation, the booster opposite the camera.

The camera's 2.5 mm lens provides a wide-angle, 90 degree horizontal field of view. Recording begins at launch and continues until after drogue parachute deployment, when the recorder switches over to a second identical camera looking out the top to record main parachute deployment. Audio is also recorded, which allows some correlation between the video and various flight events. The recorder battery pack is a 7.2 volt Lithium Ion battery which supports 90 minutes of operation, enough to support launch and then descent back to the Atlantic Ocean. The camera battery pack is a 24V Ni-Cad battery pack.

Video from the cameras is available for engineering review approximately 24 hours after the arrival of the boosters on the dock at Kennedy Space Center, usually about 52 hours after the launch.

Redesigned Booster Separation Motors

Redesigned Booster Separation Motors will fly the first time in both forward and aft locations on STS-125. As a result of vendor viability and manifest support issues, space shuttle BSMs are now being manufactured by ATK. The igniter has been redesigned and other changes include material upgrades driven by obsolescence issues and improvements to process and inspection techniques.

As before, eight BSMs are located on each booster, four on the forward section and four on the aft skirt. Once the SRBs have completed their flight, the eight BSMs are fired to jettison the boosters away from the orbiter and external tank, allowing the solid rocket motors to parachute to Earth and be reused.

SPACE SHUTTLE SUPER LIGHT WEIGHT TANK (SLWT)

The super lightweight external tank (SLWT) made its first shuttle flight June 2, 1998, on mission STS-91. The SLWT is 7,500 pounds lighter than the standard external tank. The lighter weight tank allows the shuttle to deliver International Space Station elements (such as the service module) into the proper orbit.

The SLWT is the same size as the previous design. But the liquid hydrogen tank and the liquid oxygen tank are made of aluminum lithium, a lighter, stronger material than the metal alloy used for the shuttle's current tank. The tank's structural design has also been improved, making it 30 percent stronger and 5 percent less dense.

The SLWT, like the standard tank, is manufactured at Michoud Assembly, near New Orleans, by Lockheed Martin.

The 154-foot-long external tank is the largest single component of the space shuttle. It stands taller than a 15-story building and has a diameter of about 27 feet. The external tank holds over 530,000 gallons of liquid hydrogen and liquid oxygen in two separate tanks. The hydrogen (fuel) and liquid oxygen (oxidizer) are used as propellants for the shuttle's three main engines.

EXTERNAL TANK

The 154-foot-long external tank is the largest single component of the space shuttle. It stands taller than a 15-story building and has a diameter of about 27 feet. The external tank holds more than 530,000 gallons of liquid hydrogen and liquid oxygen in two separate tanks, the forward liquid oxygen tank and the aft liquid hydrogen tank. An unpressurized intertank unites the two propellant tanks.

Liquid hydrogen (fuel) and liquid oxygen (oxidizer) are used as propellants for the shuttle's three main engines. The external tank weighs 58,500 pounds empty and 1,668,500 pounds when filled with propellants.

The external tank is the "backbone" of the shuttle during launch, providing structural support for attachment with the solid rocket boosters and orbiter. It is the only component of the shuttle that is not reused. Approximately 8.5 minutes after reaching orbit, with its propellant used, the tank is jettisoned and falls in a preplanned trajectory. Most of the tank disintegrates in the atmosphere, and the remainder falls into the ocean.

The external tank is manufactured at NASA's Michoud Assembly Facility in New Orleans by Lockheed Martin Space Systems.

Foam Facts

The external tank is covered with spray-on foam insulation that insulates the tank before and during launch. More than 90 percent of the tank's foam is applied using an automated system, leaving less than 10 percent to be applied manually.

There are two types of foam on the external tank, known as the Thermal Protection System, or TPS. One is low-density, closed-cell foam on the tank acreage and is known as Spray-On-Foam-Insulation, often referred to by its acronym, SOFI. Most of the tank is covered by either an automated or manually applied SOFI. Most areas around protuberances, such as brackets and structural elements, are applied by pouring foam ingredients into part-specific molds. The other is a denser composite

material made of silicone resins and cork and called ablator. An ablator is a material that dissipates heat by eroding. It is used on areas of the external tank subjected to extreme heat, such as the aft dome near the engine exhaust, and remaining protuberances, such as the cable trays. These areas are exposed to extreme aerodynamic heating.

Closed-cell foam used on the tank was developed to keep the propellants that fuel the shuttle's three main engines at optimum temperature. It keeps the shuttle's liquid hydrogen fuel at minus 423 degrees Fahrenheit and the liquid oxygen tank at near minus 297 degrees Fahrenheit, even as the tank sits under the hot Florida sun. At the same time, the foam prevents a buildup of ice on the outside of the tank.

The foam insulation must be durable enough to endure a 180-day stay at the launch pad, withstand temperatures up to 115 degrees Fahrenheit, humidity as high as 100 percent, and resist sand, salt, fog, rain, solar radiation and even fungus. Then, during launch, the foam must tolerate temperatures as high as 2,200 degrees Fahrenheit generated by aerodynamic friction and radiant heating from the 3,000 degrees Fahrenheit main engine plumes. Finally, when the external tank begins reentry into the Earth's atmosphere about 30 minutes after launch, the foam maintains the tank's structural temperatures and allows it to safely disintegrate over a remote ocean location.

Though the foam insulation on the majority of the tank is only 1-inch thick, it adds 4,823 pounds to the tank's weight. In the areas of the tank subjected to the highest heating, insulation is somewhat thicker, between 1.5 to 3 inches thick. Though the foam's density varies with the type, an average density is about 2.4 pounds per cubic foot.

Application of the foam, whether automated by computer or hand-sprayed, is designed to meet NASA's requirements for finish, thickness, roughness, density, strength and adhesion. As in most assembly production situations, the foam is applied in specially designed, environmentally controlled spray cells and applied in several phases, often over a period of several weeks. Before spraying, the foam's raw material and mechanical properties are tested to ensure they meet NASA specifications. Multiple visual inspections of all foam surfaces are performed after the spraying is complete.

Most of the foam is applied at NASA's Michoud Assembly Facility in New Orleans when the tank is manufactured, including most of the "closeout" areas, or final areas applied. These closeouts are done either by hand pouring or manual spraying. Additional closeouts are completed once the tank reaches Kennedy Space Center, Fla.

The super lightweight external tank, or SLWT, made its first shuttle flight in June 1998 on mission STS-91. The SLWT is 7,500 pounds lighter than previously flown tanks. The SLWT is the same size as the previous design, but the liquid hydrogen tank and the liquid oxygen tank are made of aluminum lithium, a lighter, stronger material than the metal alloy used previously.

Beginning with the first Return to Flight mission, STS-114 in June 2005, several improvements were made to improve safety and flight reliability.

Forward Bipod

The external tank's forward shuttle attach fitting, called the bipod, was redesigned to eliminate the large insulating foam ramps as a source of debris. Each external tank has two bipod fittings that connect the tank to the orbiter through the shuttle's two forward attachment struts. Four rod heaters were placed below each forward bipod, replacing the large insulated foam Protuberance Airload, or PAL, ramps.

Liquid Hydrogen Tank & Liquid Oxygen Intertank Flange Closeouts

The liquid hydrogen tank flange located at the bottom of the intertank and the liquid oxygen tank flange located at the top of the intertank provide joining mechanisms with the intertank. After each of these three component tanks, liquid oxygen, intertank and liquid hydrogen, are joined mechanically, the flanges at both ends are insulated with foam. An enhanced closeout, or finishing, procedure was added to improve foam application to the stringer, or intertank ribbing, and to the upper and lower area of both the liquid hydrogen and liquid oxygen intertank flanges.

Liquid Oxygen Feedline Bellows

The liquid oxygen feedline bellows were reshaped to include a "drip lip" that allows condensate moisture to run off and prevent freezing. A strip heater was added to the forward bellow to further reduce the potential of high density ice or frost formation. Joints on the liquid oxygen feedline assembly allow the feedline to move during installation and during liquid hydrogen tank fill. Because it must flex, it cannot be insulated with foam like the remainder of the tank.

Other tank improvements include:

Liquid Oxygen & Liquid Hydrogen Protuberance Airload (PAL) Ramps

External tank ET-119, which flew on the second Return to Flight mission, STS-121, in July 2006, was the first tank to fly without PAL ramps along portions of the liquid oxygen and liquid hydrogen tanks. These PAL ramps were extensively studied and determined to not be necessary for their original purpose, which was to protect cable trays from aeroelastic instability during ascent. Extensive tests were conducted to verify the shuttle could fly safely without these particular PAL ramps. Extensions were added to the ice frost ramps for the pressline and cable tray brackets, where these PAL ramps were removed to make the geometry of the ramps consistent with other locations on the tank and thereby provide consistent aerodynamic flow. Nine extensions were added, six on the liquid hydrogen tank and three on the liquid oxygen tank.

Engine Cutoff (ECO) Sensor Modification

Beginning with STS-122, ET-125, which launched on Feb. 7, 2008, the ECO sensor system feed through connector on the liquid hydrogen tank was modified by soldering the connector's pins and sockets to address false readings in the system. All subsequent tanks after ET-125 have the same modification.

Liquid Hydrogen Tank Ice Frost Ramps

ET-128, which flew on the STS-124 shuttle mission, May 31, 2008, was the first tank to fly with redesigned liquid hydrogen tank ice frost ramps. Design changes were incorporated at all 17 ice frost ramp locations on the liquid hydrogen tank, stations 1151 through 2057, to reduce foam loss. Although the redesigned

ramps appear identical to the previous design, several changes were made. PDL* and NCFI foam have been replaced with BX* manual spray foam in the ramp's base cutout to reduce debonding and cracking; Pressline and cable tray bracket feet corners have been rounded to reduce stresses; shear pin holes have been sealed to reduce leak paths; isolators were primed to promote adhesion; isolator corners were rounded to help reduce thermal protection system foam stresses; BX manual spray was applied in bracket pockets to reduce geometric voids.

*BX is a type of foam used on the tank's "loseout," or final finished areas; it is applied manually or hand-sprayed. PDL is an acronym for Product Development Laboratory, the first supplier of the foam during the early days of the external tank's development. PDL is applied by pouring foam ingredients into a mold. NCFI foam is used on the aft dome, or bottom, of the liquid hydrogen tank.

Liquid Oxygen Feedline Brackets

ET-128 also was the first tank to fly with redesigned liquid oxygen feedline brackets. Titanium brackets, much less thermally conductive than aluminum, replaced aluminum brackets at four locations: XT 1129, XT 1377, Xt 1624 and Xt 1871. This change minimizes ice formation in under-insulated areas, and reduces the amount of foam required to cover the brackets and the propensity for ice development. Zero-gap/slip plane Teflon material was added to the upper outboard monoball attachment to eliminate ice adhesion. Additional foam has been added to the liquid oxygen feedline to further minimize ice formation along the length of the feedline.

This page intentionally left blank

LAUNCH AND LANDING

LAUNCH

As with all previous space shuttle launches, Endeavour has several options to abort its ascent if needed after engine failures or other systems problems. Shuttle launch abort philosophy is intended to facilitate safe recovery of the flight crew and intact recovery of the orbiter and its payload.

Abort modes include:

ABORT-TO-ORBIT

This mode is used if there's a partial loss of main engine thrust late enough to permit reaching a minimal 105 by 85 nautical mile orbit with the orbital maneuvering system engines. The engines boost the shuttle to a safe orbital altitude when it is impossible to reach the planned orbital altitude.

TRANSATLANTIC ABORT LANDING

The loss of one or more main engines midway through powered flight would force a landing at either Zaragoza, Spain; Moron, Spain; or Istres, France. For launch to proceed, weather conditions must be acceptable at one of these TAL sites.

RETURN-TO-LAUNCH-SITE

If one or more engines shuts down early and there's not enough energy to reach Zaragoza, the shuttle would pitch around toward Kennedy until within gliding distance of the Shuttle Landing Facility. For launch to proceed, weather conditions must be forecast to be acceptable for a possible RTLS landing at KSC about 20 minutes after liftoff.

ABORT ONCE AROUND

An AOA is selected if the vehicle cannot achieve a viable orbit or will not have enough propellant to perform a deorbit burn, but has enough energy to circle the Earth once and land about 90 minutes after liftoff.

LANDING

The primary landing site for Endeavour on STS-126 is the Kennedy Space Center's Shuttle Landing Facility. Alternate landing sites that could be used if needed because of weather conditions or systems failures are at Edwards Air Force Base, Calif., and White Sands Space Harbor, N.M.

This page intentionally blank

ACRONYMS AND ABBREVIATIONS

A/G	Alignment Guides
A/L	Airlock
AAA	Avionics Air Assembly
ABC	Audio Bus Controller
ACBM	Active Common Berthing Mechanism
ACDU	Airlock Control and Display Unit
ACO	Assembly Checkout Officer
ACS	Atmosphere Control and Supply
ACU	Arm Control Unit
ADS	Audio Distribution System
AE	Approach Ellipsoid
AEP	Airlock Electronics Package
AI	Approach Initiation
AJIS	Alpha Joint Interface Structure
AM	Atmosphere Monitoring
AMOS	Air Force Maui Optical and Supercomputing Site
AOH	Assembly Operations Handbook
APAS	Androgynous Peripheral Attachment
APCU	Assembly Power Converter Unit
APE	Antenna Pointing Electronics
	Audio Pointing Equipment
APFR	Articulating Portable Foot Restraint
APM	Antenna Pointing Mechanism
APS	Automated Payload Switch
APV	Automated Procedure Viewer
AR	Atmosphere Revitalization
ARCU	American-to-Russian Converter Unit
ARS	Atmosphere Revitalization System
ASW	Application Software
ATA	Ammonia Tank Assembly
ATCS	Active Thermal Control System
ATU	Audio Terminal Unit
BAD	Broadcast Ancillary Data
BC	Bus Controller
BCDU	Battery Charge/Discharge Unit
	Berthing Mechanism Control and Display Unit
BEP	Berthing Mechanism Electronics Package
BGA	Beta Gimbal Assembly

BIC	Bus Interface Controller
BIT	Built-In Test
BM	Berthing Mechanism
BOS	BIC Operations Software
BSS	Basic Software
BSTS	Basic Standard Support Software
C&C	Command and Control
C&DH	Command and Data Handling
C&T	Communication and Tracking
C&W	Caution and Warning
C/L	Crew Lock
C/O	Checkout
CAM	Collision Avoidance Maneuver
CAPE	Canister for All Payload Ejections
CAS	Common Attach System
CB	Control Bus
CBCS	Centerline Berthing Camera System
CBM	Common Berthing Mechanism
CCA	Circuit Card Assembly
CCAA	Common Cabin Air Assembly
CCHA	Crew Communication Headset Assembly
CCP	Camera Control Panel
CCT	Communication Configuration Table
CCTV	Closed-Circuit Television
CDR	Space Shuttle Commander
CDRA	Carbon Dioxide Removal Assembly
CETA	Crew Equipment Translation Aid
CHeCS	Crew Health Care System
CHX	Cabin Heat Exchanger
CISC	Complicated Instruction Set Computer
CLA	Camera Light Assembly
CLPA	Camera Light Pan Tilt Assembly
CMG	Control Moment Gyro
COTS	Commercial Off the Shelf
CPA	Control Panel Assembly
CPB	Camera Power Box
CR	Change Request
CRT	Cathode-Ray Tube
CSA	Canadian Space Agency
CSA-CP	Compound Specific Analyzer
CVIU	Common Video Interface Unit

CVT	Current Value Table
CZ	Communication Zone
DB	Data Book
DC	Docking Compartment
DCSU	Direct Current Switching Unit
DDCU	DC-to-DC Converter Unit
DEM	Demodulator
DFL	Decommutation Format Load
DIU	Data Interface Unit
DMS	Data Management System
DMS-R	Data Management System-Russian
DPG	Differential Pressure Gauge
DPU	Baseband Data Processing Unit
DRTS	Japanese Data Relay Satellite
DYF	Display Frame
E/L	Equipment Lock
EATCS	External Active Thermal Control System
EBCS	External Berthing Camera System
ECC	Error Correction Code
ECLSS	Environmental Control and Life Support System
ECS	Environmental Control System
ECU	Electronic Control Unit
EDSU	External Data Storage Unit
EDU	EEU Driver Unit
EE	End Effector
EETCS	Early External Thermal Control System
EEU	Experiment Exchange Unit
EF	Exposed Facility
EFBM	Exposed Facility Berthing Mechanism
EFHX	Exposed Facility Heat Exchanger
EFU	Exposed Facility Unit
EGIL	Electrical, General Instrumentation, and Lighting
EIU	Ethernet Interface Unit
ELM-ES	Japanese Experiment Logistics Module – Exposed Section
ELM-PS	Japanese Experiment Logistics Module – Pressurized Section
ELPS	Emergency Lighting Power Supply
EMGF	Electric Mechanical Grapple Fixture
EMI	Electro-Magnetic Imaging
EMU	Extravehicular Mobility Unit
E-ORU	EVA Essential ORU
EP	Exposed Pallet

EPS	Electrical Power System
ES	Exposed Section
ESA	European Space Agency
ESC	JEF System Controller
ESW	Extended Support Software
ET	External Tank
ETCS	External Thermal Control System
ETI	Elapsed Time Indicator
ETRS	EVA Temporary Rail Stop
ETVCG	External Television Camera Group
EV	Extravehicular
EVA	Extravehicular Activity (Spacewalk)
EXP-D	Experiment-D
EXT	External
FA	Fluid Accumulator
FAS	Flight Application Software
FCT	Flight Control Team
FD	Flight Day
FDDI	Fiber Distributed Data Interface
FDIR	Fault Detection, Isolation, and Recovery
FDS	Fire Detection System
FE	Flight Engineer
FET-SW	Field Effect Transistor Switch
FGB	Functional Cargo Block
FOR	Frame of Reference
FPP	Fluid Pump Package
FR	Flight Rule
FRD	Flight Requirements Document
FRGF	Flight Releasable Grapple Fixture
FRM	Functional Redundancy Mode
FSE	Flight Support Equipment
FSEGF	Flight Support Equipment Grapple Fixture
FSW	Flight Software
GAS	Get-Away Special
GCA	Ground Control Assist
GLA	General Lighting Assemblies
	General Luminaire Assembly
GLONASS	Global Navigational Satellite System
GNC	Guidance, Navigation, and Control
GPC	General Purpose Computer
GPS	Global Positioning System

GPSR	Global Positioning System Receiver
GUI	Graphical User Interface
H&S	Health and Status
HCE	Heater Control Equipment
HCTL	Heater Controller
HEPA	High Efficiency Particulate Acquisition
HPA	High Power Amplifier
HPP	Hard Point Plates
HRDR	High Rate Data Recorder
HREL	Hold/Release Electronics
HRFM	High Rate Frame Multiplexer
HRM	Hold Release Mechanism
HRMS	High Rate Multiplexer and Switcher
HTV	H-II Transfer Vehicle
HTVCC	HTV Control Center
HTV Prox	HTV Proximity
HX	Heat Exchanger
I/F	Interface
IAA	Intravehicular Antenna Assembly
IAC	Internal Audio Controller
IBM	International Business Machines
ICB	Inner Capture Box
ICC	Integrated Cargo Carrier
ICS	Interorbit Communication System
ICS-EF	Interorbit Communication System – Exposed Facility
IDRD	Increment Definition and Requirements Document
IELK	Individual Equipment Liner Kit
IFHX	Interface Heat Exchanger
IMCS	Integrated Mission Control System
IMCU	Image Compressor Unit
IMV	Intermodule Ventilation
INCO	Instrumentation and Communication Officer
IP	International Partner
IP-PCDU	ICS-PM Power Control and Distribution Unit
IP-PDB	Payload Power Distribution Box
ISP	International Standard Payload
ISPR	International Standard Payload Rack
ISS	International Space Station
ISSSH	International Space Station Systems Handbook
ITCS	Internal Thermal Control System
ITS	Integrated Truss Segment

IVA	Intravehicular Activity
IVSU	Internal Video Switch Unit
JAL	JEM Air Lock
JAXA	Japan Aerospace Exploration Agency
JCP	JEM Control Processor
JEF	JEM Exposed Facility
JEM	Japanese Experiment Module
JEMAL	JEM Airlock
JEM-PM	JEM – Pressurized Module
JEMRMS	Japanese Experiment Module Remote Manipulator System
JEUS	Joint Expedited Undocking and Separation
JFCT	Japanese Flight Control Team
JLE	Japanese Experiment Logistics Module – Exposed Section
JLP	Japapese Experiment Logistics Module – Pressurized Section
JLP-EDU	JLP-EFU Driver Unit
JLP-EFU	JLP Exposed Facility Unit
JPM	Japanese Pressurized Module
JPM WS	JEM Pressurized Module Workstation
JSC	Johnson Space Center
JTVE	JEM Television Equipment
Kbps	Kilobit per second
KOS	Keep Out Sphere
LB	Local Bus
LCA	LAB Cradle Assembly
LCD	Liquid Crystal Display
LED	Light Emitting Diode
LEE	Latching End Effector
LMC	Lightweight MPESS Carrier
LSW	Light Switch
LTA	Launch-to-Activation
LTAB	Launch-to-Activation Box
LTL	Low Temperature Loop
MA	Main Arm
MAUI	Main Analysis of Upper-Atmospheric Injections
Mb	Megabit
Mbps	Megabit per second
MBS	Mobile Base System
MBSU	Main Bus Switching Unit
MCA	Major Constituent Analyzer

MCC	Mission Control Center
MCC-H	Mission Control Center – Houston
MCC-M	Mission Control Center – Moscow
MCDS	Multifunction Cathode-Ray Tube Display System
MCS	Mission Control System
MDA	MacDonald, Dettwiler and Associates Ltd.
MDM	Multiplexer/Demultiplexer
MDP	Management Data Processor
MELFI	Minus Eighty-Degree Laboratory Freezer for ISS
MGB	Middle Grapple Box
MIP	Mission Integration Plan
MISSE	Materials International Space Station Experiment
MKAM	Minimum Keep Alive Monitor
MLE	Middeck Locker Equivalent
MLI	Multi-layer Insulation
MLM	Multipurpose Laboratory Module
MMOD	Micrometeoroid/Orbital Debris
MOD	Modulator
MON	Television Monitor
MPC	Main Processing Controller
MPESS	Multipurpose Experiment Support Structure
MPEV	Manual Pressure Equalization Valve
MPL	Manipulator Retention Latch
MPLM	Multi-Purpose Logistics Module
MPM	Manipulator Positioning Mechanism
MPV	Manual Procedure Viewer
MSD	Mass Storage Device
MSFC	Marshall Space Flight Center
MSP	Maintenance Switch Panel
MSS	Mobile Servicing System
MT	Mobile Tracker
MTL	Moderate Temperature Loop
MUX	Data Multiplexer
NASA	National Aeronautics and Space Administration
NCS	Node Control Software
NET	No Earlier Than
NLT	No Less Than
n.mi.	nautical mile
NPRV	Negative Pressure Relief Valve
NSV	Network Service

NTA	Nitrogen Tank Assembly
NTSC	National Television Standard Committee
OBSS	Orbiter Boom Sensor System
OCA	Orbital Communications Adapter
OCAD	Operational Control Agreement Document
OCAS	Operator Commanded Automatic Sequence
ODF	Operations Data File
ODS	Orbiter Docking System
OI	Orbiter Interface
OIU	Orbiter Interface Unit
OMS	Orbital Maneuvering System
OODT	Onboard Operation Data Table
ORCA	Oxygen Recharge Compressor Assembly
ORU	Orbital Replacement Unit
OS	Operating System
OSA	Orbiter-based Station Avionics
OSE	Orbital Support Equipment
OTCM	ORU and Tool Changeout Mechanism
OTP	ORU and Tool Platform
P/L	Payload
PAL	Planning and Authorization Letter
PAM	Payload Attach Mechanism
PAO	Public Affairs Office
PBA	Portable Breathing Apparatus
PCA	Pressure Control Assembly
PCBM	Passive Common Berthing Mechanism
PCN	Page Change Notice
PCS	Portable Computer System
PCU	Power Control Unit
PDA	Payload Disconnect Assembly
PDB	Power Distribution Box
PDGF	Power and Data Grapple Fixture
PDH	Payload Data Handling unit
PDRS	Payload Deployment Retrieval System
PDU	Power Distribution Unit
PEC	Passive Experiment Container
PEHG	Payload Ethernet Hub Gateway
PFE	Portable Fire Extinguisher
PGSC	Payload General Support Computer
PIB	Power Interface Box
PIU	Payload Interface Unit

PLB	Payload Bay
PLBD	Payload Bay Door
PLC	Pressurized Logistics Carrier
PLT	Payload Laptop Terminal
	Space Shuttle Pilot
PM	Pressurized Module
PMA	Pressurized Mating Adapter
PMCU	Power Management Control Unit
POA	Payload ORU Accommodation
POR	Point of Resolution
PPRV	Positive Pressure Relief Valve
PRCS	Primary Reaction Control System
PREX	Procedure Executor
PRLA	Payload Retention Latch Assembly
PROX	Proximity Communications Center
psia	Pounds per Square Inch Absolute
PSP	Payload Signal Processor
PSRR	Pressurized Section Resupply Rack
PTCS	Passive Thermal Control System
PTR	Port Thermal Radiator
PTU	Pan/Tilt Unit
PVCU	Photovoltaic Controller Unit
PVM	Photovoltaic Module
PVR	Photovoltaic Radiator
PVTCS	Photovoltaic Thermal Control System
QD	Quick Disconnect
R&MA	Restraint and Mobility Aid
RACU	Russian-to-American Converter Unit
RAM	Read Access Memory
RBVM	Radiator Beam Valve Module
RCC	Range Control Center
RCT	Rack Configuration Table
RF	Radio Frequency
RGA	Rate Gyro Assemblies
RHC	Rotational Hand Controller
RIGEX	Rigidizable Inflatable Get-Away Special Experiment
RIP	Remote Interface Panel
RLF	Robotic Language File
RLT	Robotic Laptop Terminal
RMS	Remote Manipulator System
ROEU	Remotely Operated Electrical Umbilical

ROM	Read Only Memory
R-ORU	Robotics Compatible Orbital Replacement Unit
ROS	Russian Orbital Segment
RPC	Remote Power Controller
RPCM	Remote Power Controller Module
RPDA	Remote Power Distribution Assembly
RPM	Roll Pitch Maneuver
RS	Russian Segment
RSP	Return Stowage Platform
RSR	Resupply Stowage Rack
RT	Remote Terminal
RTAS	Rocketdyne Truss Attachment System
RVFS	Rendezvous Flight Software
RWS	Robotics Workstation
SAFER	Simplified Aid for EVA Rescue
SAM	SFA Airlock Attachment Mechanism
SARJ	Solar Alpha Rotary Joint
SCU	Sync and Control Unit
SD	Smoke Detector
SDS	Sample Distribution System
SEDA	Space Environment Data Acquisition equipment
SEDA-AP	Space Environment Data Acquisition equipment – Attached Payload
SELS	SpaceOps Electronic Library System
SEU	Single Event Upset
SFA	Small Fine Arm
SFAE	SFA Electronics
SI	Smoke Indicator
SLM	Structural Latch Mechanism
SLP-D	Spacelab Pallet – D
SLP-D1	Spacelab Pallet – Deployable
SLP-D2	Spacelab Pallet – D2
SLT	Station Laptop Terminal
	System Laptop Terminal
SM	Service Module
SMDP	Service Module Debris Panel
SOC	System Operation Control
SODF	Space Operations Data File
SPA	Small Payload Attachment
SPB	Survival Power Distribution Box
SPDA	Secondary Power Distribution Assembly
SPDM	Special Purpose Dexterous Manipulator

SPEC	Specialist
SRAM	Static RAM
SRB	Solid Rocket Booster
SRMS	Shuttle Remote Manipulator System
SSAS	Segment-to-Segment Attach System
SSC	Station Support Computer
SSCB	Space Station Control Board
SSE	Small Fine Arm Storage Equipment
SSIPC	Space Station Integration and Promotion Center
SSME	Space Shuttle Main Engine
SSOR	Space-to-Space Orbiter Radio
SSP	Standard Switch Panel
SSPTS	Station-to-Shuttle Power Transfer System
SSRMS	Space Station Remote Manipulator System
STC	Small Fire Arm Transportation Container
STR	Starboard Thermal Radiator
STS	Space Transfer System
STVC	SFA Television Camera
SVS	Space Vision System
TA	Thruster Assist
TAC	TCS Assembly Controller
TAC-M	TCS Assembly Controller – M
TCA	Thermal Control System Assembly
TCB	Total Capture Box
TCCS	Trace Contaminant Control System
TCCV	Temperature Control and Check Valve
TCS	Thermal Control System
TCV	Temperature Control Valve
TDK	Transportation Device Kit
TDRS	Tracking and Data Relay Satellite
THA	Tool Holder Assembly
THC	Temperature and Humidity Control Translational Hand Controller
THCU	Temperature and Humidity Control Unit
TIU	Thermal Interface Unit
TKSC	Tsukuba Space Center (Japan)
TLM	Telemetry
TMA	Russian vehicle designation
TMR	Triple Modular Redundancy
TPL	Transfer Priority List
TRRJ	Thermal Radiator Rotary Joint

TUS	Trailing Umbilical System
TVC	Television Camera
UCCAS	Unpressurized Cargo Carrier Attach System
UCM	Umbilical Connect Mechanism
UCM-E	UCM – Exposed Section Half
UCM-P	UCM – Payload Half
UHF	Ultrahigh Frequency
UIL	User Interface Language
ULC	Unpressurized Logistics Carrier
UMA	Umbilical Mating Adapter
UOP	Utility Outlet Panel
UPC	Up Converter
USA	United Space Alliance
US LAB	United States Laboratory
USOS	United States On-Orbit Segment
VAJ	Vacuum Access Jumper
VBSP	Video Baseband Signal Processor
VCU	Video Control Unit
VDS	Video Distribution System
VLU	Video Light Unit
VRA	Vent Relief Assembly
VRCS	Vernier Reaction Control System
VRCV	Vent Relief Control Valve
VRIV	Vent Relief Isolation Valve
VSU	Video Switcher Unit
VSW	Video Switcher
WAICO	Waiving and Coiling
WCL	Water Cooling Loop
WETA	Wireless Video System External Transceiver Assembly
WIF	Work Interface
WRM	Water Recovery and Management
WRS	Water Recovery System
WS	Water Separator
	Work Site
	Work Station
WVA	Water Vent Assembly
ZSR	Zero-g Stowage Rack

MEDIA ASSISTANCE

NASA TELEVISION TRANSMISSION

NASA Television is carried on an MPEG-2 digital signal accessed via satellite AMC-6, at 72 degrees west longitude, transponder 17C, 4040 MHz, vertical polarization. For those in Alaska or Hawaii, NASA Television will be seen on AMC-7, at 137 degrees west longitude, transponder 18C, at 4060 MHz, horizontal polarization. In both instances, a Digital Video Broadcast, or DVB-compliant Integrated Receiver Decoder, or IRD, with modulation of QPSK/DBV, data rate of 36.86 and FEC 3/4 will be needed for reception. The NASA Television schedule and links to streaming video are available at:

http://www.nasa.gov/ntv

NASA TV's digital conversion will require members of the broadcast media to upgrade with an 'addressable' Integrated Receiver De-coder, or IRD, to participate in live news events and interviews, media briefings and receive NASA's Video File news feeds on a dedicated Media Services channel. NASA mission coverage will air on a digital NASA Public Services "Free to Air" channel, for which only a basic IRD will be needed.

Television Schedule

A schedule of key in-orbit events and media briefings during the mission will be detailed in a NASA TV schedule posted at the link above. The schedule will be updated as necessary and will also be available at:

http://www.nasa.gov/multimedia/nasatv/mission_schedule.html

Status Reports

Status reports on launch countdown and mission progress, in-orbit activities and landing operations will be posted at:

http://www.nasa.gov/shuttle

This site also contains information on the crew and will be updated regularly with photos and video clips throughout the flight.

More Internet Information

Information on the ISS is available at:

http://www.nasa.gov/station

Information on safety enhancements made since the Columbia accident is available at:

http://www.nasa.gov/returntoflight/system/index.html

Information on other current NASA activities is available at:

http://www.nasa.gov

Resources for educators can be found at the following address:

http://education.nasa.gov

This page intentionally left blank.

PUBLIC AFFAIRS CONTACTS

HEADQUARTERS
WASHINGTON, DC

Space Operations Mission Directorate

Michael Braukus
International Partners
202-358-1979
michael.j.braukus@nasa.gov

Katherine Trinidad
Shuttle, Space Station Policy
202-358-3749
katherine.trinidad@nasa.gov

John Yembrick
Shuttle, Space Station Policy
202-358-0602
john.yembrick-1@nasa.gov

Mike Curie
Shuttle, Space Station Policy
202-358-4715
michael.curie@nasa.gov

Science Mission Directorate

Grey Hautaluoma
Research in Space
202-358-0668
grey.hautaluoma-1@nasa.gov

Ashley Edwards
Research in Space
202-358-1756
ashley.edwards-1@nasa.gov

JOHNSON SPACE CENTER
HOUSTON, TEXAS

James Hartsfield
News Chief
281-483-5111
james.a.hartsfield@nasa.gov

Kyle Herring
Public Affairs Specialist
Space Shuttle Program Office
281-483-5111
kyle.j.herring@nasa.gov

Rob Navias
Program and Mission Operations Lead
281-483-5111
rob.navias-1@nasa.gov

Kelly Humphries
Public Affairs Specialist
International Space Station and Mission Operations Directorate
281-483-5111
kelly.o.humphries@nasa.gov

Nicole Cloutier-Lemasters
Public Affairs Specialist
Astronauts
281-483-5111
nicole.cloutier-1@nasa.gov

KENNEDY SPACE CENTER
CAPE CANAVERAL, FLORIDA

Allard Beutel
News Chief
321-867-2468
allard.beutel@nasa.gov

Candrea Thomas
Public Affairs Specialist
Space Shuttle
321-861-2468
candrea.k.thomas@nasa.gov

Tracy Young
Public Affairs Specialist
International Space Station
321-867-2468
tracy.g.young@nasa.gov

MARSHALL SPACE FLIGHT CENTER
HUNTSVILLE, ALABAMA

Dom Amatore
Public Affairs Manager
256-544-0034
dominic.a.amatore@nasa.gov

June Malone
Public Affairs Specialist
News Chief/Media Manager
256-544-0034
june.e.malone@nasa.gov

Steve Roy
Public Affairs Specialist
Space Shuttle Propulsion
256-544-0034
steven.e.roy@nasa.gov

STENNIS SPACE CENTER
BAY ST. LOUIS, MISSISSIPPI

Linda Theobald
Public Affairs Officer
228-688-3249
linda.l.theobald@nasa.gov

Paul Foerman
News Chief
228-688-1880
paul.foerman-1@nasa.gov

AMES RESEARCH CENTER
MOFFETT FIELD, CALIFORNIA

Mike Mewhinney
News Chief
650-604-3937
michael.mewhinney@nasa.gov

Jonas Dino
Public Affairs Specialist
650-604-5612
jonas.dino@nasa.gov

DRYDEN FLIGHT RESEARCH CENTER
EDWARDS, CALIFORNIA

Fred Johnsen
Director, Public Affairs
661-276-2998
frederick.a.johnsen@nasa.gov

Alan Brown
News Chief
661-276-2665
alan.brown@nasa.gov

Leslie Williams
Public Affairs Specialist
661-276-3893
leslie.a.williams@nasa.gov

GLENN RESEARCH CENTER CLEVELAND, OHIO

Lori Rachul
News Chief
216-433-8806
lori.j.rachul@nasa.gov

Katherine Martin
Public Affairs Specialist
216-433-2406
katherine.martin@nasa.gov

LANGLEY RESEARCH CENTER HAMPTON, VIRGINIA

Marny Skora
Head, News Media Office
757-864-3315
marny.skora@nasa.gov

Chris Rink
Public Affairs Officer
757-864-6786
christopher.p.rink@nasa.gov

Kathy Barnstorff
Public Affairs Officer
757-864-9886
katherine.a.barnstorff@nasa.gov

UNITED SPACE ALLIANCE

Jessica Pieczonka
Houston Operations
281-212-6252
832-205-0480
jessica.b.pieczonka@usa-spaceops.com

David Waters
Florida Operations
321-861-3805
david.waters@usa-spaceops.com

BOEING

Tanya Deason-Sharp
Media Relations
Boeing Space Exploration
281-226-6070
tanya.e.deason-sharp@boeing.com

Ed Memi
Media Relations
Boeing Space Exploration
281-226-4029
edmund.g.memi@boeing.com

JAPAN AEROSPACE EXPLORATION AGENCY (JAXA)

JAXA Public Affairs Office
Tokyo, Japan
011-81-3-6266-6414, 6415, 6416, 6417
proffice@jaxa.jp

CANADIAN SPACE AGENCY (CSA)

Jean-Pierre Arseneault
Manager, Media Relations & Information Services
514-824-0560 (cell)
jean-pierre.arseneault@space.gc.ca

Media Relations Office
Canadian Space Agency
450-926-4370

EUROPEAN SPACE AGENCY (ESA)

Clare Mattok
Communication Manager
Paris, France
011-33-1-5369-7412
clare.mattok@esa.int

This page intentionally blank