STS-124 / 1J

FD 10 Execute Package

MSG	Page(s)	Title
081A	1 - 13	FD10 Flight Plan Revision **(pdf)**
082	14 - 15	FD10 Mission Summary **(pdf)**
083	16 - 18	FD10 Transfer Message **(pdf)**
084	19	OGS Stowage Relocate **(pdf)**
085A	---	Stowage Locations for FD10 Plan (GMT 161/162) **(pdf - Electronic Only)**
086	20 - 30	1.900 Airlock Battery Charger Module (BCM) R&R **(pdf)**
087	31 - 33	JLP NPRV Checkout **(pdf)**
088	34 - 37	FD 10/11 EVA Deltas **(pdf)**
089	38 - 40	JPM Rack Umbilical Velcro Removal **(pdf)**
090	---	FD10 PAO Event Summary - Discovery/ISS Joint Crew News Conf **(pdf - Electronic Only)**
091	41 - 42	Updated LiOH Cue Card **(pdf)**

Approved by FAO: *Jaime Marshik*

Last Updated: Jun 9 2008 7:41AM GMT
JEDI *(**J**oint **E**xecute package **D**evelopment and **I**ntegration), v2.04.0003*

THIS PAGE INTENTIONALLY BLANK

MSG INDEX

MSG NO.	TITLE
081	FD10 Flight Plan Revision
082	FD10 Mission Summary
083	FD 10 Transfer Message
084	OGS Stowage Relocate
085	Stowage Locations for FD10 Plan (GMT 161/162)
086	1.900 Airlock Battery Charger Module (BCM) R&R
087	JLP NPRV Checkout
088	FD 10/11 EVA Deltas
089	JPM Rack Umbilical Velcro Removal
090	FD10 PAO Event Summary - Discovery/ISS Joint Crew News Conf
091	Updated LiOH Cue Card

1. Post Sleep Cryo Config

For today's cryo config prior to the IWIS thruster test firing, additional O2 tanks will be activated to mitigate the effects of cryo tank destratification. Upon completion of the test, EGIL will provide steps realtime to reconfigure to the nominal cryo config.

R1 O2, H2 MANF VLV TK1 (two) - OP (tb-OP)
O2 TK3 HTR A - AUTO

A11 CRYO TK4 HTR O2 A – AUTO

2. FD09 MMT Summary

The FD09 MMT met briefly to discuss mission status and the team continues to be very happy with the state of both vehicles. EVA 3 was in progress at the time of the meeting and everyone is looking forward to analyzing the port SARJ samples that you have collected. There are no new issues that are being worked by the team.

3. EVA Message Notes

Great job on the EVA yesterday! Congratulations on the third one this mission! MSG 088 (17-0385) in today's Execute Package includes an EVA comm question, an IVA cleanup procedure for the SARJ sample, and some deltas that will need to be incorporated for the next couple of days of EVA activities.

4. BCM R&R

Mike and Mark: Thanks for the great job on the Battery Charger Module (BCM) Modification on FD07! We have one more small change to the plan for the BCM R&R on FD10. Originally, you were scheduled to remove all four BCMs, install the BCMs from slots 3 and 4 into slots 1 and 2, and the new BCMs into slots 3 and 4. The new plan is to only remove the BCMs from slots 1 and 2, and then install the newly modified BCMs in those slots. We have uplinked an updated procedure with the BCM swap steps updated; the rest of the procedure is unchanged. We also are still allotting four hours for the task, just in case there are any issues with the Airlock Rack Rotate.

5. SRMS Maneuver to JEM RMS Viewing Position

The SRMS WR joint can be moved back to -90 deg to view the JEM RMS deploy. Reconfigure the SRMS back to the JEM RMS Deploy Viewing posn (WR= -110) prior to running the OBSS UNDOCK CONFIG procedure.

6. O2 Transfer Removal

You'll notice that we removed the O2 Transfer and your setup activity from the timeline. Based on pre-flight agreements to conserve ORCA life, we did not create enough ullage in the ISS tanks to make transfer worthwhile.

7. Answer for Aki on IRIS Switch Position

Regarding the IRIS switch function on the CCP to control EXT A camera before the ALC switch was set to AVERAGE: The ALC switch position does not affect the ability to manually adjust the IRIS on the CCP (the IRIS can be adjusted regardless of ALC switch position). The VLU was off when you first attempted to adjust the IRIS, so we believe it was too dark to notice a change in the camera view after adjusting the IRIS. The IRIS function appeared to function nominally after SSIPC turned on the VLU and you operated ALC switch.

8. LiOH Swap

At MET 8/23:00 perform LiOH Swap. The activity will transfer fourteen STS-118 cans with LiOH socks to the Shuttle. The LiOH socks should be removed from twelve of the STS-118 cans and placed on STS-124 cans 1-9 (used) and 27-29 (new), which will be transferred to ISS. STS-124 cans 30-31 have LiOH socks already installed and will also be transferred to ISS. Reference Transfer List Items 9 and 717 for further LiOH swap details and stowage locations.

9. LiOH Changeouts

Beginning presleep tonight, you will use STS-118 cans for LiOH Changeouts. Report the decal numbers of the cans you install to MCC.

The STS-118 cans may have more dust than newer cans. Don PPE when you perform these changeouts. Masks and gloves are stowed in the LiOH volume and goggles are located in the CCK (MA9N). Masks should only be used once and should be disposed of in the dry trash after use.

You will use STS-118 cans for 8 LiOH changeouts and you have a total of 30 masks in the LiOH volume, so manage your PPE consumables accordingly.

10. Water Hardware Transfer

All planned water transfer activities will conclude today following the completion of CWC fill #7. Following completion of CWC fill #7 your middeck transfer will include the following: Transfer Ag Biocide Kit S/N 1005 to ISS. Reference the H2O Ops Cue Card, Rev C (MSG 020) for ISS stowage location and transfer list item 16. Transfer the remaining sample bags from Sample/Purge Kit S/N 1006 to ISS Sample/Purge Kit S/N 1005. Reference transfer list item 17 for additional instructions.

11. Condensate Collection Changeout

At MET 8/15:05 perform CHANGEOUT of SHUTTLE CONDENSATE COLLECTION (ORB OPS, ECLS), p. 5-36. Retrieve empty Condensate CWC s/n 5050 which was temp stowed after being dumped on FD8. Condensate CWC s/n 5051 can be temp stowed for dumping on FD11.

12. Replace pages 2-34, 2-36, and 3-104 through 3-111.

NO EXERCISE
[DURING DEDICATED THRUSTER FIRING TEST & MNVR BACK TO TEA]

06/09/08 02:09:54 **REPLANNED**

GMT 06/09/08 (161) — 12 10 13 11 14 12 15 13 16 14 17 15 18 16 19 17 20 18 21 19 22 20 23 21 009/00

MET Day 008

FD10

STS-124	CDR KELLY	POST SLEEP; XFER; UPDTE; EXERCISE; MDDK XFER; OGS RELOC; MEAL; BCM R&R; BCM; XFER; TAGUP; XFER; BREIEF
STS-124	PLT HAM	POST SLEEP; CLEAR; CO/OND; PWR FILL #4; PWR FILL #5; PWR FILL #6; PWR; XFER; MDDK XFER; FCMS OPS; OBSS^; MEAL; MCIU; IMU; CWC INIT 7; EXERCISE; CWC TERM; H2O*; CWC XFER; MDDK XFER; SP; JLP INSTL; LIOH SWAP
STS-124	MS1 NYBERG	LOG; POST SLEEP; BUS-I; JRMS FNL DPLY; JEMRMS MNVR TO STOW; HRMWU; JEMRMS BRAKE C/O; HRMCL; EXERCISE; IWIS*; MEAL; JLP VEST OUTFIT 2; JLP INGRESS; JLP; HP RELOC; SP; JLP INSTL; JLP NPRV C/O; UMBL VEL RMV
STS-124	MS2 GARAN	LOG; ASPRN; POST SLEEP; EMU CMPNT SWAP; EVA PREP FOR XFER; EVA XFER; MDDK XFER; OBSS^; MEAL; MDDK XFER; EXERCISE; MDDK XFER
STS-124	MS3 FOSSUM	SLVA; ASPRN; POST SLEEP; EMU CMPNT SWAP; EVA PREP FOR XFER; EVA XFER; EXERCISE; MEAL; BCM R&R; BSA BATT RCHG INIT
STS-124	MS4 HOSHIDE	SLVA; POST SLEEP; DRAG*; JRMS FNL ACT; JRMS FNL DPLY; JEMRMS MNVR TO STOW; JEMRMS BRAKE C/O; BUS-T; DRAG*; JEMRMS HRM HOLD; JRMS#; MEAL; JLP VEST OUTFIT 2; JLP INGRESS; PHOTO; EXERCISE; JLP ELPS ENABLE
DN	FE-2 REISMAN	SLVA; PS; PMC; DPC; PW; DPSB R&R; CEVIS; COL ITCS SMPL; ♣; MIDO; DCB PK FAM; MEAL; HANDOVER; CWC; RED; PW; DPC; PW; PAOSU
EXP 17	ISS CDR VOLKOV	PS; PW; DPC; PW; ГФИ-1-CDR-INSTL; ⊕; ГФИ 1 CDR; ГФИ 1 RMV; TVIS; MEAL; TK ACO TO; VELO + RED; IWIST; IWISS; PW; DPC; PW
EXP 17	FE-1 KONONENKO	PS; PW; DPC; PW; ИП-1; MNT; КАБ SEARCH; IWIS; DWLN; CEVIS+RED; MEAL; СОЖ-MNT; IMS; TVIS; EXER; PW; DPC; PW
UP	FE-2 CHAMITOFF	SLVA; DRY; PS; DRY; PS; PW; DPC; PW; DCS RCNFG; VTR; JRMS FNL DPLY; JEMRMS MNVR TO STOW; RED; CMS; OGS RELOC; PEPS; DRY; DCB PK FAM; MEAL; HANDOVER; CWC; CEVIS; DRY; PW; DPC; PW

STS

ORBIT: 135 136 137 138 139 140 141 142 143

DAY/NIGHT

TDRS W -171 E -46 Z 275

ORB ATT: BIAS -XLV -ZVV

NOTES: **DTF TEST**; *JEM DRAG-THRU CNCT; ⊕ГФИ INIT; ♣MIDO-VIDEO-S/U; *REMOVAL; ^UNDOCK POSITION; #DEACT-PREP PT2; *JEM DRAG-THRU DSCNCT; *NOMINAL H2O CONFIG

06/09/08 02:09:54 **REPLANNED**

GMT 06/09/08 (161) 22 23 06/10 01 02 03 04 05 06 07 08 09
MET 009/00 01 02 03 04 05 06 07 08 09 10 11 12
Day 009

FD10

STS-124	CDR KELLY	CREW CONF	CREW PHOTO	PRE SLEEP	PMC A/G	PRE SLEEP	SLEEP	POST SLEEP
STS-124	PLT HAM	CREW CONF	CREW PHOTO	PRE SLEEP			SLEEP	POST SLEEP
STS-124	MS1 NYBERG	CREW CONF	CREW PHOTO	PRE SLEEP			SLEEP	LOG POST SLEEP
STS-124	MS2 GARAN	CREW CONF	CREW PHOTO	PRE SLEEP			SLEEP	LOG POST SLEEP
STS-124	MS3 FOSSUM	CREW CONF	CREW PHOTO	PRE SLEEP			SLEEP	POST SLEEP
STS-124	MS4 HOSHIDE	CREW CONF	CREW PHOTO	PRE SLEEP			SLEEP	POST SLEEP
DN	FE-2 REISMAN	CREW CONF	CREW PHOTO	PS			SLEEP (8.5)	PS
EXP 17	ISS CDR VOLKOV	CREW CONF	CREW PHOTO	PS			SLEEP (8.5)	PS
EXP 17	FE-1 KONONENKO	CREW CONF	CREW PHOTO	PS			SLEEP (8.5)	PS
UP	FE-2 CHAMITOFF	CREW CONF	CREW PHOTO	PS	DRY		SLEEP (8.5)	PS

STS

ORBIT	143	144	145	146	147	148	149	150	
DAY/NIGHT									
TDRS W -171									
TDRS E -46									
TDRS Z 275									
ORB ATT	BIAS -XLV -ZVV								

NOTES

STS-124 FD10

GMT Date 06/09 (161) | W | TDRS E | Z | DO/N | ORB | MET Day 008 | STS ATI

10:00 11:00 12:00 13:00

135 136 137

BIAS-XLV-ZVV

12:00 13:00 14:00 15:00 16:00

FD10 EZ ACTIVITES
√OCAC FILTER & MDDK DUCT SCREEN
HARD REBOOT ALL PGSCs EXCEPT:
STS-7(WLES),STS-6(RPOP2),&
OCA ROUTER.

CDR KELLY

POST-SLEEP ACTIVITY
(ORB OPS, CREW SYS)

TRANSFER UPDATE
Ref. Transfer List & MSG 083

EXERCISE

PLT HAM

POST-SLEEP ACTIVITY
(ORB OPS, CREW SYS)

A SPEC 22
ITEM 20 EXEC
RESUME

STAR TABLE CLEAR A
SHUTTLE CONDENSATE COLLECTION
(ORB OPS, ECLS) Perform CHANGEOUT
Ref. MSG 081, Item 11

PWR FILL (ORB OPS, ECLS)
Perform WATER FILL #4
Ref. MSG 020
Report B/C and S/N to MCC

PWR FILL (ORB OPS, ECLS)
Perform WATER FILL #5, Ref. MSG 020
Report B/C and S/N to MCC

MS1 NYBERG

FLIGHT SLEEP LOG (ORB OPS, SDBI)

POST-SLEEP ACTIVITY
(ORB OPS, CREW SYS)

JEMRMS BUS MONITOR OPS
(JODF/ROBO,ACT & C/O)Steps 1 & 2

JEMRMS FINAL DEPLOY
(JODF/ROBO, ACT & C/O)
Ref. MSG 061

JEMRMS MNVR TO STOWED POSITION
(JODF/ROBO, ACT & C/O)

Notes

NO EXERCISE DURING DEDICATED THRUSTER FIRING TEST & MNVR TO TEA

STS-124 FD10

GMT Date 06/09 (161) | W | TDRS E | Z | DO/N | ORB | MET Day 008 | STS ATI

DO/N: 135, 136, 137

STS ATI: BIAS-XLV-ZVV

MS2 GARAN	MS3 FOSSUM	MS4 HOSHIDE	Notes
FLIGHT SLEEP LOG (ORB OPS, SDBI)	LIQUID SLVA(ORB OPS,SDBI)Step B	LIQUID SLVA(ORB OPS,SDBI)Step B	
EVA CREW: TAKE 1 ASPIRIN (325 mg)	EVA CREW: TAKE 1 ASPIRIN (325 mg)		
POST-SLEEP ACTIVITY (ORB OPS, CREW SYS)	POST-SLEEP ACTIVITY (ORB OPS, CREW SYS)	POST-SLEEP ACTIVITY (ORB OPS, CREW SYS)	NO EXERCISE DURING DEDICATED THRUSTER FIRING TEST & MNVR TO TEA
EMU COMPONENT SWAP (EVA, AIRLOCK CONFIG) Ref. MSG 088	EMU COMPONENT SWAP (EVA, AIRLOCK CONFIG) Ref. MSG 088	P/TV05 ISS INTRNL OPS(HC)(P/TV,SCENES) JEM DRAG-THRU CONNECT	
		JEMRMS FINAL ACTIVATION (JODF/ROBO, ACT & C/O) Steps 1-6	
		JEMRMS FINAL DEPLOY (JODF/ROBO, ACT & C/O) Ref. MSG 061	
EVA PREP FOR TRANSFER TO SHUTTLE (EVA, AIRLOCK CONFIG) Ref. MSG 088	EVA PREP FOR TRANSFER TO SHUTTLE (EVA, AIRLOCK CONFIG) Ref. MSG 088		
		JEMRMS MNVR TO STOWED POSITION (JODF/ROBO, ACT & C/O)	

STS-124 FD10

GMT Date 06/09 (161) — W E Z — DRS/TDRS — DON/DOR — MET Day 008 — STS ATI

14:00 15:00 16:00 17:00

138 139 140

BIAS-XLV-ZVV

16:00 17:00 18:00 19:00 20:00

CDR KELLY

EXERCISE

MIDDECK TRANSFER
Ref. Transfer List: Items 701,701.1,607

OGS STOWAGE RELOCATE
Ref. MSG 084
Ref. Transfer List: Item 704.9

MEAL

AIRLOCK BATTERY CHARGER MODULE (BCM) R&R
Step 17.2: Install EMU 3018 on AFT EDDA
Install EMU 3004 on FWD EDDA
Ref. MSG 081, Item 4
Ref. MSG 086 & MSG 085

PLT HAM

PWR FILL (ORB OPS, ECLS)
Perform WATER FILL #5, Ref. MSG 020
Report B/C and S/N to MCC

PWR FILL (ORB OPS, ECLS)
Perform WATER FILL #6
Ref. MSG 020
Report B/C and S/N to MCC

PWR TRANSFER
Tansfer 3 PWRs to ISS

MIDDECK TRANSFER
Ref. Transfer List: Items 402 & 703

FC MONITORING SYS (FCMS) OPS
(ORB OPS, EPS)

OBSS UNDOCK CONFIG
(PDRS, VIEWING SUPPORT)

MEAL

L17 Check MCIU filter screen

MS1 NYBERG

JEMRMS MNVR TO STOWED POSITION
(JODF/ROBO, ACT & C/O)

HRM CLOSE (JODF/ROBO, ACT & C/O)
Steps 1.1-1.2

JEMRMS BRAKE CHECKOUT
(JODF/ROBO, ACT & C/O)

HRM CL(JODF/ROBO,ACT & C/O)Steps 1.3-1.4

EXERCISE

ASSY OPS: 3.129 IWIS INSTALLATION IN SHUTTLE AIRLOCK Step 2, Ref. MSG 085

MEAL

ASSY OPS: 7.010 VEST OUTFIT JPM TO JLP PART 2 Ref. MSG 085

Notes

STS-124 FD10

GMT Date 06/09 (161) | W E Z | D/N | O R B | MET Day 008 | STS ATI

MS2 GARAN

- 16:00 — EVA PREP FOR TRANSFER TO SHUTTLE (EVA, AIRLOCK CONFIG) Ref. MSG 088
- EVA TRANSFER TO SHUTTLE (EVA, AIRLOCK CONFIG) Ref. Transfer List: Items 710-713
- 17:00 — MIDDECK TRANSFER Ref. Transfer List: Items 715.2 & 902
- OBSS UNDOCK CONFIG (PDRS, VIEWING SUPPORT)
- MEAL
- 19:00 — MIDDECK TRANSFER Ref. Transfer List: Items 706 & 903
- 20:00

MS3 FOSSUM

- EVA PREP FOR TRANSFER TO SHUTTLE (EVA, AIRLOCK CONFIG) Ref. MSG 088
- EVA TRANSFER TO SHUTTLE (EVA, AIRLOCK CONFIG) Ref. Transfer List: Items 710-713
- EXERCISE
- MEAL
- AIRLOCK BATTERY CHARGER MODULE (BCM) R&R Step 17.2: Install EMU 3018 on AFT EDDA; Install EMU 3004 on FWD EDDA Ref. MSG 081, Item 4 Ref. MSG 086 & MSG 085

MS4 HOSHIDE

- JEMRMS MNVR TO STOWED POSITION (JODF/ROBO, ACT & C/O)
- JEMRMS BRAKE CHECKOUT (JODF/ROBO, ACT & C/O)
- JEMRMS BUS MONITOR OPS (JODF/ROBO, ACT & C/O) Steps 3 & 5
- P/TV05 ISS INTERNAL OPS(HC)(P/TV, SCENES) JEM DRAG THRU DISCONNECTION
- HRM CLOSE(JODF/ROBO, ACT & C/O)Step 2
- JEMRMS DEACT PREP (JODF/ROBO, ACT & C/O) Steps 5-9
- MEAL
- ASSY OPS: 7.010 VEST OUTFIT JPM TO JLP PART 2 Ref. MSG 085

Notes

BIAS-XLV-ZVV

138 139 140

STS-124 FD10

GMT Date 06/09 (161) | W E Z | DON/ORB | MET Day 008 | STS ATI

140 141 142 143

BIAS-XLV-ZVV

CDR KELLY

20:00
AIRLOCK BATTERY CHARGER MODULE (BCM) R&R
Step 17.2: Install EMU 3018 on AFT EDDA
Install EMU 3004 on FWD EDDA
Ref. MSG 081, Item 4
Ref. MSG 086 & MSG 085

21:00

MIDDECK TRANSFER
Ref. Transfer List: Item 700.2

DAILY STS/ISS CREW TRANSFER TAGUP

TRANSFER BRIEF
Call down status to MCC

00:00

PLT HAM

IMU STAR OF OPTY ALIGN (ORB OPS, GNC)

SHUTTLE/ISS H2O CNTR FILL
(ORB OPS, ECLS) INIT #7
Ref. MSG 020

EXERCISE

SHUTTLE/ISS H2O CONT FILL
(ORB OPS, ECLS) TERM
Report B/C and S/N to MCC

NOMINAL H2O CONFIG (ORB OPS, ECLS)
FES Pri A req'd

CWC TRANSFER
Transfer 1 CWC to ISS

MIDDECK TRANSFER
Ref. MSG 081, Item 10
Ref. Transfer List: Items 16 & 17

JEM SETUP AFTER JLP RELOCATION
(JODF/JEM A&C, ACT & C/O) Step 6
Install Soft Dummy Panels to JLP1A2, JLP1P1, JLP1P2, & JLP1F2. Ref. MSG 085

LiOH SWAP
Ref. MSG 081, Item 8
Ref. MSG 091
Ref. Transfer List: Items 9 & 717

MS1 NYBERG

ASSY OPS: 7.010 VEST OUTFIT JPM TO JLP PART 2 Ref. MSG 085

ASSY OPS: 7.011 JLP INGRESS & JPM/JLP IMV ESTABLISHMENT
Steps 1-3,5-7
Ingress with PFE (from JPM1D2_B2) & PBA (from NOD2P2)
Ref. MSG 085

Relocate panels to JLP1S1 & S2.
Release bonding plate from panel
(Ratchet, 1/4" Drive, 5/32" Hex Head)
JEM SETUP AFTER JLP RELOCATION
(JODF/JEM A&C, ACT & C/O)
Steps 2, 3.1, & 3.3.

JEM SETUP AFTER JLP RELOCATION
(JODF/JEM A&C, ACT & C/O) Step 6
Install Soft Dummy Panels to JLP1A2, JLP1P1, JLP1P2, & JLP1F2. Ref. MSG 085

JLP NPRV CHECKOUT
Ref. MSG 087
Ref. MSG 085

RACK UMBLICAL VELCRO REMOVAL
Ref. MSG 089

Notes

STS-124 FD10

GMT Date 06/09 (161) | W | TDRS E | Z | D/N | ORB | MET Day 008 | STS ATI

ORB: 140, 141, 142, 143

STS ATI: BIAS-XLV-ZVV

MS2 GARAN

20:00 — MIDDECK TRANSFER
Ref. Transfer List: Items 706 & 903

21:00 — EXERCISE

22:00 — MIDDECK TRANSFER
Ref. Transfer List: Item 704.8

23:00

00:00

MS3 FOSSUM

AIRLOCK BATTERY CHARGER MODULE (BCM) R&R
Step 17.2: Install EMU 3018 on AFT EDDA
Install EMU 3004 on FWD EDDA
Ref. MSG 081, Item 4
Ref. MSG 086 & MSG 085

EVA SYS: 1.605 BSA BATT RECHARGE - INIT
Ref. MSG 088

MS4 HOSHIDE

ASSY OPS: 7.010 VEST OUTFIT JPM TO JLP
PART 2 Ref. MSG 085

ASSY OPS: 7.011 JLP INGRESS & JPM/JLP IMV ESTABLISHMENT
Steps 1-3,5-7
Ingress with PFE (from JPM1D2_B2) & PBA (from NOD2P2)
Ref. MSG 085

JPM STANDOFF PHOTO Take photo of JPM1OF6

EXERCISE

JLP ELPS C/O & ENABLE(DISABLE)
(JODF/IFM, EPS)
Ref. MSG 085

Notes

STS-124 FD10

GMT Date 06/09 (161) | W E Z | T D R S | D/N | O R B | MET Day 009 | STS ATI

CDR KELLY	PLT HAM	MS1 NYBERG	Notes
CREW CONFERENCE ISS KU: 23:57-00:41 Ref. MSG 090	CREW CONFERENCE ISS KU: 23:57-00:41 Ref. MSG 090	CREW CONFERENCE ISS KU: 23:57-00:41 Ref. MSG 090	
CREW PHOTO	CREW PHOTO	CREW PHOTO	
PRE-SLEEP ACTIVITY (ORB OPS, CREW SYS) √HUM SEP for H2O Accumulation			
PRIVATE MEDICAL CONFERENCE Perform Via A/G 2	PRE-SLEEP ACTIVITY (ORB OPS, CREW SYS)	PRE-SLEEP ACTIVITY (ORB OPS, CREW SYS)	
PRE-SLEEP ACTIVITY (ORB OPS, CREW SYS)			
SLEEP	SLEEP	SLEEP	

WAKE UP AT 9/11:30

Day 009: 00:00, 01:00, 02:00, 03:00, 04:00

GMT: 22:00, 23:00, 00:00, 01:00

DON/ORB: 143, 144, 145

STS ATI: BIAS-XLV-ZVV

STS-124 FD10

GMT Date 06/09 (161) | W | T D R S E | Z | D/N | O R B | MET Day 009 | STS ATI

MS2 GARAN | MS3 FOSSUM | MS4 HOSHIDE | Notes

00:00 — 01:00 — 02:00 — 03:00 — 04:00

22:00 — 23:00 — 00:00 — 01:00

143 — 144 — 145

BIAS -XLV -ZVV

CREW CONFERENCE
ISS KU: 23:57-00:41
Ref. MSG 090

CREW PHOTO

PRE-SLEEP ACTIVITY
(ORB OPS, CREW SYS)

WAKE UP AT 9/11:30

SLEEP

Good Morning Discovery!!!

Your EVA yesterday was super!!!

Systems under your purview persist in their prolonged, pronounced, and prolific production of perpetually perfect performance. Predictably, the perfunctory activities were performed per the plan. A paucity of anomalies continues to permeate practically all of the orbiter systems.

And that about says it all!!

Have a great day!!!

YOUR CURRENT ORBIT IS: 185 X 181 NM

NOTAMS:

EDW –	LAKEBED RUNWAY 15/33 ELS ONLY. OTHER LAKEBED RWYS RED.
NOR –	LAKEBED RUNWAYS GREEN.
NTU –	NGU TACAN CH CHANGED TO 86Y.
YJT –	TACAN CH 78 DME ONLY.
HAW –	RWY 31 CLOSED. RWY 13 TODA 8,994'.
WAK –	CLOSED. NOT USABLE.
IKF –	NOT USABLE. NO AGREEMENT.
BEN –	NOT RECOMMENDED/NOT SUPPORTED.
ZZA –	FIRST 600M (~2,000') OF RWY 30L NOT AVAILABLE. 10,200' REMAINING.
NKT –	CLOSED UNTIL 1430Z.

NEXT 2 PLS OPPORTUNITIES:

NOR23	ORB	141 – 8/21:35	SKC	100/3P5
NOR23	ORB	156 – 9/20:22	SKC	230/15P25

OMS TANK FAIL CAPABILITY:

L OMS FAILS: NO
R OMS FAILS: NO

LEAKING OMS PRPLT BURN:

L OMS LEAK: ALWAYS BURN RETROGRADE
R OMS LEAK: ALWAYS BURN RETROGRADE

OMS QUANTITIES(%)

L OMS OX = 30.3 R OMS OX = 30.3
FU = 29.9 FU = 30.3

SUBTRACT INTERCONNECT COUNTER TO OBTAIN CURRENT OMS QUANTITIES

DELTA V AVAILABLE:

OMS	315 FPS
ARCS (TOTAL ABOVE QTY1)	38 FPS
TOTAL IN THE AFT	353 FPS
ARCS (TOTAL ABOVE QTY2)	71 FPS
FRCS (ABOVE QTY 1)	26 FPS
AFT QTY 1	80 %
AFT QTY 2	42 %

THERE ARE NO FAILURE/IMPACT/WORK AROUNDS FOR TODAY.

END OF PAGE 2 OF 2, MSG 082

Good morning Aki, Ken, Garrett, Greg, and Mark!

We have divided the remaining transfer items into the FD10 & FD11 choreography. In order to complete your FD11 transfer in the allotted time you must complete the items on today's choreography. You are 84% complete on Resupply, 57% complete on Return, and 66% complete overall.

Mark, yesterday several items should have been packed into return bags 401 & 402 by Garrett per the stowage note (the details are listed below in the choreography). We recommend you tag up with Garrett prior to the transfer brief this afternoon to confirm that all of those items have been packed for return.

Mark & Greg, the OGS Stowage Relocate is scheduled for today. The procedure will have you remove the OGS water delivery system to access the OGS stowage volume. Inside the OGS stowage volume is the hydrogen sensor (transfer list item 704.9) that needs to be retrieved. Also, there are some items staged at LAB1D1 rack front that need to be stowed inside the OGS stowage volume.

Aki, we passed along your concerns about the JEM drag thru cables to the Photo/TV team. Here is their response:

> "We've talked it around down here, and the consensus is that we do need to return the JEM drag-through cables this flight. We understand that this is contrary to the pre-flight agreement, but we would like these cables to come home for a couple of reasons. There are some Photo/TV cables that are flying next shuttle flight and plenty of BNC video cables already on board ISS that can be used in place of the ones you're returning. So in an effort to control the proliferation of cables on-board and ease the stowage load, we'd like to bring these home."

Ken, for today's LiOH swap activity it is going to be a straight 14-for-14 swap. So no LiOH will be returning outside the of the LiOH box. Your 14 cans from ISS are pregathered in a mesh bag at LAB1O3 ready to be transferred to shuttle. From shuttle you will be taking 5 un-used cans and 9 used cans for transfer to ISS. The specific can numbers are listed in the transfer list (item 9).

If the EVA torque wrench (transfer list item 607) is not found today then we are going to remove it from the transfer list. We have added our best guess on its location to the transfer list. Note that the torque wrench that you just brought up was stowed in the same location we're suggesting you check, so if you find a wrench in there, please check the S/N's against the Transfer List to make sure it's the right one!

For STS, the Transfer List Excel file, FD10_Transfer_List_STS124.xls, is located on the KFX machine in **C:\OCA-up\transfer**.

For ISS, the Transfer List Excel file, FD10_Transfer_List_STS124.xls, is located in **K:\OCA-up\transfer**.

FD10 Choreography (items for transfer today)

- Items 401.1, 402.3, and 402.4 (Garrett): Transfer the ITCS Samples, SSK, and CSA-O2 per the stowage note yesterday
- Item 401.2 (Garrett): Stow the ITCS sample taken today per the stowage note
- Items 9 & 717 (Ken): Transfer LiOH during LiOH SWAP
    - 5 unused cans from Mddk to ISS
    - 9 used cans from Mddk LiOH Box to ISS
    - 14 unused cans from ISS to Mddk LiOH Box
- Items 15.8 and 700.3 (Garrett): Transfer the DPSBs during R&R
- Item 700.2 (Mark): Stow old BCMs in Bag A in Columbus after BCM R&R during BCM XFER
- Items 704.9 (Mark and Greg): Transfer old Hydrogen Sensor per OGS stowage relocate activity
- Items 710 thru 713 (Ron & Mike): Transfer EVA Hardware per EVA XFER
- Item 403.3 (Greg): Transfer the IWIS tape after the VTR Tape Exchange
- Items 607, 701.1 (Mark): Transfer torque wrench bag (if found) and Silver Biocide Syringe Kit during MDDK XFER
- Items 16, 17, and 402 and (Ken): Transfer the Silver Biocide Kit, Sample Bags, and CTB during MDDK XFER
- Items 704.8, 715.2, 902, 903 (Ron): Transfer ACK, Blood Collection Kit, and ATV PR items during MDDK XFER
- Transfer 5 MLE Bags from Columbus back to shuttle during remaining scheduled time:
    - Item 701 – Bag B: only remaining item is the silver biocide kit which is already temp stowed on shuttle
    - Item 703 – Bag D: packed and ready for transfer
    - Item 706 – Bag J: packed and ready for transfer

Please update the Transfer List as follows:

In **RESUPPLY** tab:
Replace page 3, 7, 13.

In **RETURN** tab:
Replace pages 16, 17.

FD11 Choreography (items for transfer tomorrow)

- Item 804 (Ron): Transfer PGSC during PGSC XFER
- Item 702.2 and 707 (Greg): Transfer blood samples and kit during stow activity
- Item 715.1, 718 (Greg): Transfer saliva samples and kit during stow activity
- Items 715.3, 715.4 (Garrett): Transfer PLANT HAB and SGHAB during CGBA removal
- Item 708 (Greg): Transfer double coldbag during coldbag transfer activity
- Item 805 (Mark): Transfer duct during hatch close
- Item 24, 403.1, 403.2, and 403 (Ron): Transfer PGSC Desk, any remaining tapes and P/TV bag during MDDK XFER
- Items 608, 715 (Mark): Transfer PWRs and CTB during MDDK XFER
- Item 901 (Mike): Transfer the JEM Drag Thru cables during MDDK XFER
- Transfer remaining 5 MLE Bags from Columbus:
    - Item 700 – Bag A
    - Item 702 – Bag C
    - Item 704 – Bag H
    - Item 705 – Bag I

Let us know if you have questions.
- The Transfer Team

17-0381 (MSG 084) OGS Stowage Relocate

OBJECTIVE:

To unstow the Hydrogen Sensor ORU for return on 1J and restow items into the OGS Stowage Volume.

DURATION:

30 minutes

REFERENCED PROCEDURE:

1.271 OGS WATER DELIVERY SYSTEM RELOCATION

1. Don Static Wrist Tether

2. Perform {1.271 OGS WATER DELIVERY SYSTEM RELOCATION}, step 1 (US SODF: S&M: NOMINAL: RACK), then:

3. Doff Static Wrist Tether.

4. Relocate items per TABLE A: OGS STOWAGE RELOCATE:

TABLE A: OGS STOWAGE RELOCATE

Item #	OP NOM (Bag Label)	P/N	S/N	B/C	Current Location	Final Location
1	Hydrogen Sensor ORU	SV826167-1	1005	ARSOH2S5M	**LAB1P1** Stowage Area Inside Rack	**1J Return** Item #704.9
2	WRS Closeout Assy Soft Cover	683-64403-1	0001	00060126H	**LAB1D1** Rack Front	**LAB1P1** Stowage Area Inside Rack
3	0.5 CTB (ECLSS #1)	SEG33111836-303	1379	CTB00284J		
4	0.5 CTB: (ECLSS # 2)	SEG33111836-303	1385	CTB00291J		
5	0.5 CTB (ECLSS #3)	SEG33111836-303	1326	010507J		
6	WRS Closeout Assembly - Seat Track Bracket	683-64400-2	000001	00070153J		
7	WRS Closeout Assembly - Seat Track Bracket	683-64400-3	000001	00070794H		

5. Don Static Wrist Tether

6. Perform {1.271 OGS WATER DELIVERY SYSTEM RELOCATION}, step 2 (US SODF: S&M: NOMINAL: RACK), then:

7. Doff Static Wrist Tether.

17-0374 (MSG 086) 1.900 AIRLOCK BATTERY CHARGER MODULE (BCM) R&R

(ASSY OPS/1J/FIN/REAL-TIME) Page 1 of 11 pages

OBJECTIVE:

During the 1J docked mission, remove two Battery Charger Modules (BCM) from the Airlock Avionics Rack (A/L1F1). Install the two new BCMs launched on 1J (and modified on 1J FD07) in BCM-1 and BCM-2 locations. BCM R&R requires rotation of the A/L1F1 Rack.

LOCATION:

Installed: Airlock Avionics Rack (A/L1F1)

DURATION:

4 hours total crew time

CREW:

Two

PARTS:

Battery Charger (two) P/N SEG39128256-305

MATERIALS:

Gray Tape
Velcro Straps
Sharpie
24" x 24" Ziplock Bags (four) P/N 528-50000-8

TOOLS:

Driver Drill (aka Makita)
Spotlight
DCS 760 Camera

ISS IVA Toolbox:

Drawer 2:
- Hex Shank, 1/4" Drive
- 5/32" Hex Head, 1/4" Drive
- 5/16" Socket, 1/4" Drive
- Ratchet, 1/4" Drive
- Ratchet, 3/8" Drive
- 1/4" to 3/8" Adapter
- (40-200 in-lbs) Trq Wrench, 1/4" Drive
- (10-50 in-lbs) Trq Wrench, 1/4" Drive

Drawer 3:
- #2 Long Trq Driver, 3/8" Drive
- 6" Long, 3/8" Hex Head, 3/8" Drive

Drawer 5:
- Static Wrist Tether

REFERENCED PROCEDURE:

1.901 AIRLOCK AVIONICS RACK (A/L1F1) PIVOT FITTING REMOVAL/INSTALLATION

1. SAFING

WARNING
Failure to remove power can result in electrical shock hazard.

BCMs 1 to 4 1.1 ✓sw MAIN POWER – OFF

✓ MAIN POWER LED – Off

PSA 1.2 ✓ sw MAIN POWER – OFF

✓ MAIN POWER LED – Off

IV/ MCC-H PCS 1.3 Airlock: EPS: RPCM AL1A4A B
RPCM_AL1A4A_B

sel RPC [X] where [X] = 3 4 5 6

✓ RPC Position – Open

✓ Close Cmd – Inhibit

Repeat

1.4 Airlock: EPS: RPCM AL2A3B B
RPCM_AL2A3B_B

sel RPC 18

cmd RPC Position – Open (Verify – Op)
cmd Close Cmd – Inhibit (Verify – Inh)

Figure 1. - Battery Charger Module Designations

2. CONFIGURING A/L1F1 FOR RACK ROTATION

NOTE
All directional references (up, down, left, right) are with respect to front face of Rack, as you face Rack.

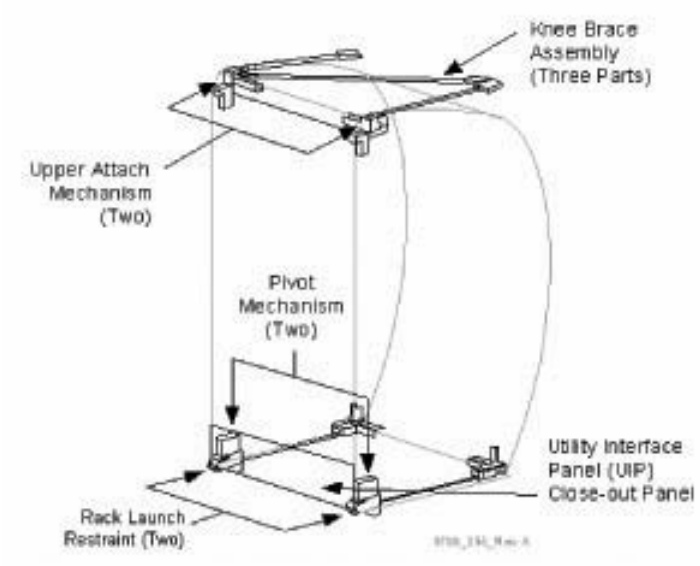

Figure 2. - Location of Rack Attachment Mechanisms

2.1 ✓ Both EMUs removed from Airlock
Temporarily stow.

2.2 Remove EDDA from Rack being rotated (leaving seat track anchors attached to rack).
Temporarily stow.

2.3 Open BSA door.
✓ No batteries installed.
Close BSA door.

2.4 Remove Utility Interface Panel (UIP) Closeout from Rack, 1/4 Turn Fasteners (two).

3. REMOVING AV RACK CLOSEOUT PANELS FOR ROTATION

NOTE
The following Closeout Panels interfere with rotating A/L1F1 Rack and must be removed.

Table 1. Airlock Closeout Panels.

Removal Order	Panel	Fasteners (5/32" Hex Head)
1	Small blue Panel (no label) next to A/L1F2	2
2	A/L1F2	25
3	A/L1FD2	13
4	A/L1OF2	12

3.1 Remove Airlock Closeout Panels, in order per Table 1 (Ratchet, 1/4" Drive; 5/32" Hex Head, 1/4" Drive).

4. DISENGAGING RIGHT LOWER LAUNCH RESTRAINT

Refer to Figure 3.

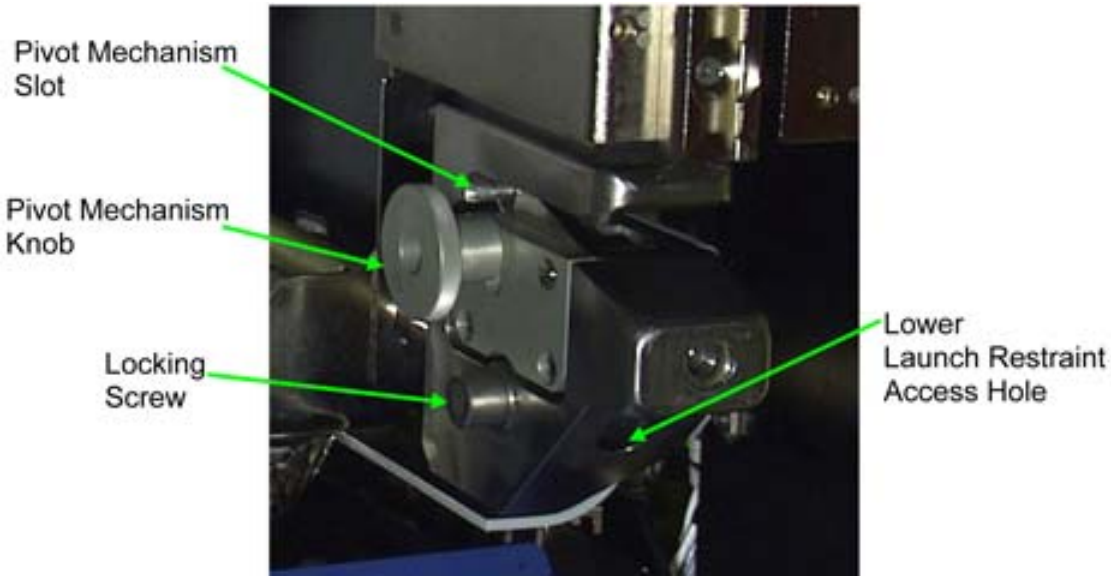

Figure 3. - Lower Launch Restraint (Left Side).

NOTE
Lower Launch Restraint locking screw is non-captive. It is completely removed to prevent binding during Launch Restraint disengagement, and then reinstalled.

4.1 Remove right Locking Screw (Ratchet, 3/8" Drive; 6" Long, 3/8" Hex Head, 3/8" Drive).

4.2 Disengage right Lower Launch Restraint 10 to 12 turns until hard stop (Ratchet, 3/8" Drive; 6" Long, 3/8" Hex Head, 3/8" Drive).

4.3 Install, snug right Locking Screw (Ratchet, 3/8" Drive; 6" Long, 3/8" Hex Head, 3/8" Drive).

5. DISENGAGING UPPER ATTACH MECHANISMS
Refer to Figure 4.

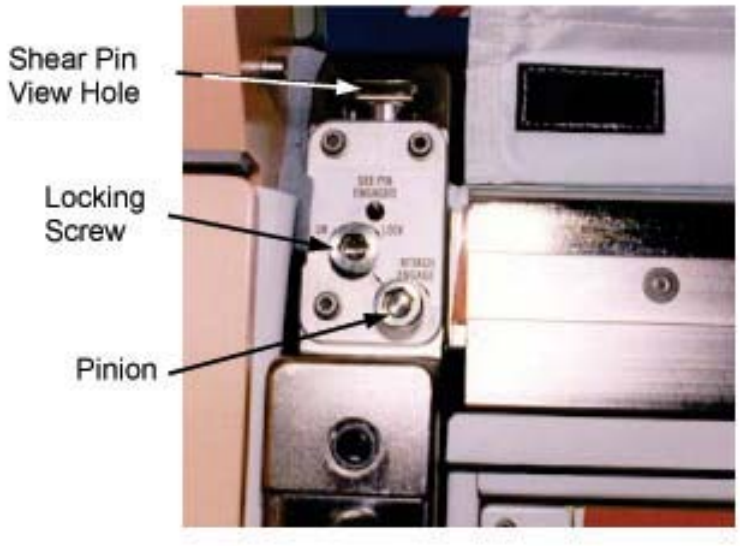

Figure 4. - Left Upper Attach Mechanism

NOTE
1. Begin with Rack left Upper Attach Mechanism.
2. Locking screw on left Upper Attach Mechanism is non-captive.

5.1 Loosen Locking Screw 10 to 12 turns, or until threads completely disengage (Ratchet, 3/8" Drive; 6" Long, 3/8" Hex Head, 3/8" Drive).

NOTE
To disengage left pinion, turn ↶
To disengage right pinion, turn ↷

5.2 Disengage pinion one full turn until hard stop (Ratchet, 3/8" Drive; 6" Long, 3/8" Hex Head, 3/8" Drive).

5.3 Repeat steps 5.1 and 5.2 for right Upper Attach Mechanism.

6. ROTATING RACK DOWN

CAUTION
If Rack pivot pins not installed, care must be taken not to damage Rack umbilicals during Rack rotation.

6.1 Check Rack rotation path unobstructed.
Remove any unnecessary equipment.

6.2 Slowly rotate Rack down to a controlled stop.
Temporarily restrain Rack, as required.

7. DEMATING BCM CONNECTORS

7.1 Unfasten rear access panel fasteners (forty-four) (Ratchet, 1/4" Drive; 5/32" Hex Head, 1/4" Drive).
Remove from Rack.
Temporarily stow.

7.2 Don Static Wrist Tether.
Secure to unpainted, unanodized metal surface.

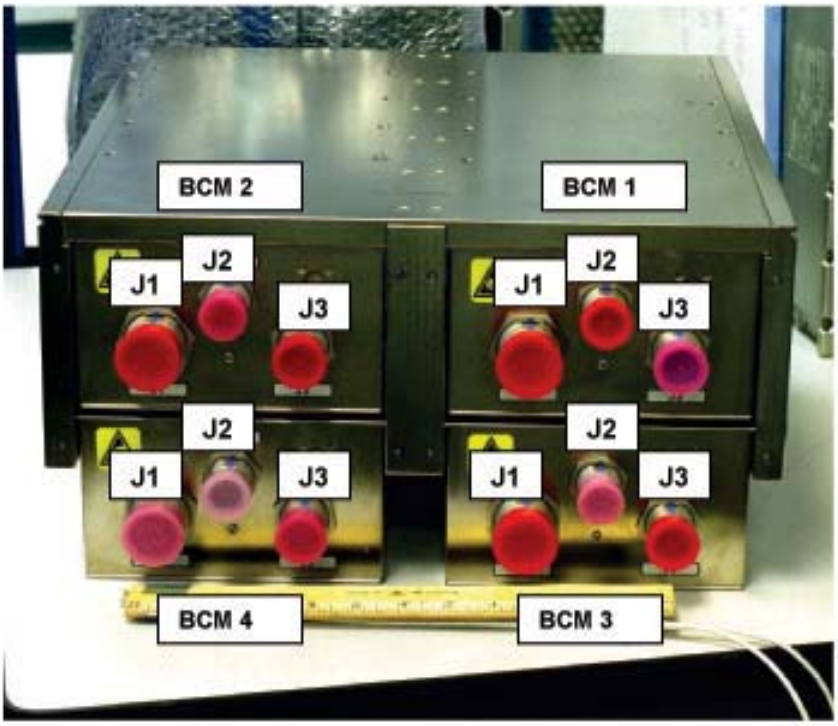

Figure 5. - BCM Connectors (Rear View)

Table 2. BCM Connections.

BCM	J1 Cable	J2 Cable	J3 Cable
1	GW005-P1	W075-P7	W082-P4
2	GW006-P1	W075-P6	W082-P5

7.3 Demate cables (three) on BCM-1.
Refer to Figure 5, Table 2.

7.4 Repeat step 7.3 for BCM-2.

8. TEMPORARILY ROTATING RACK UP

CAUTION
All cables, equipment, tools must be removed from area behind, around Rack to prevent equipment damage.

8.1 ✓ Rack rotation path unobstructed
Remove any unnecessary equipment.

CAUTION
If Rack pivot pins not installed, care must be taken not to damage Rack umbilicals during Rack rotation.

8.2 Slowly rotate Rack up to a controlled stop.
Temporarily restrain Rack.

9. REMOVING BCM

Figure 6. - BCM Housing Assembly Captive Fasteners

NOTE
P/N for BCMs removed from BCM-1 and BCM-2: SEG39128256-301. P/N for new BCMs flying on 1J: SEG39128256-305. These have been recently modified by the cutting of a resistor to defeat the LED illumination feature

9.1 Loosen BCM-1 fasteners (four) (Ratchet, 3/8" Drive; #2 Long Trq Driver, 3/8" Drive).
Refer to Figures 1, 6.

9.2 Loosen clamp fasteners (two) five turns (or as required) clamping BCM-1 to Housing Assembly Coldplate (Ratchet, 1/4" Drive; 5/16" Socket, 1/4" Drive).
Refer to Figure 6.

9.3 Remove BCM-1 by grasping handle then pulling forward.
Label BCM-1 (Gray Tape, Sharpie).
Temporarily stow.

9.4 Double bag BCM-1 (P/N SEG39128256-301) (24" x 24" Ziplock Bags).

9.5 Repeat steps 9.1 to 9.4 for BCM-2.

10. INSTALLING BCM

10.1 Retrieve one recently modified BCM (P/N SEG39128256-305).
Position BCM in BCM-1 installation location.

10.2 Tighten, torque clamp fasteners (two), to 50 in-lbs [Ratchet, 1/4" Drive; 5/16" Socket; (40-200 in-lbs) Trq Wrench, 1/4" Drive].

10.3 Tighten, torque BCM fasteners (four), to 22 in-lbs [Ratchet, 1/4" Drive; 1/4" to 3/8" Adapter; #2 Long Trq Driver, 3/8" Drive; (10-50 in-lbs) Trq Wrench, 1/4" Drive].

10.4 Repeat steps 10.1 to 10.3 to install other recently modified BCM (P/N SEG39128256-305) in BCM-2 location.

10.5 Doff Static Wrist Tether.

11. TEMPORARILY ROTATING RACK DOWN

CAUTION
All cables, equipment, tools must be removed from area around Rack

11.1 ✓ Rack rotation path unobstructed
Remove any unnecessary equipment.

CAUTION
If Rack pivot pins not installed, care must be taken not to damage rack umbilicals during Rack rotation.

11.2 Slowly rotate Rack down to a controlled stop.
As required, temporarily restrain Rack.

11.3 Don Static Wrist Tether.
Secure to unpainted, unanodized metal surface.

11.4 Mate cables (three per BCM) to BCM-1, BCM-2.
Refer to Figure 5, Table 2.

11.5 Doff Static Wrist Tether.

11.6 Photo document newly installed BCMs (DCS 760 Camera).

11.7 Check for FOD around work area within 1 m radius.

11.8 Install rack access panel.
Tighten fasteners (forty-four) securing rear access panel to Rack (Ratchet, 1/4" Drive; 5/32" Hex Head, 1/4" Drive).

12. ROTATING A/L1F1 UP

12.1 Check Rack rotation path unobstructed.
Remove any unnecessary equipment.

✓ No interference with Lower Launch Restraints

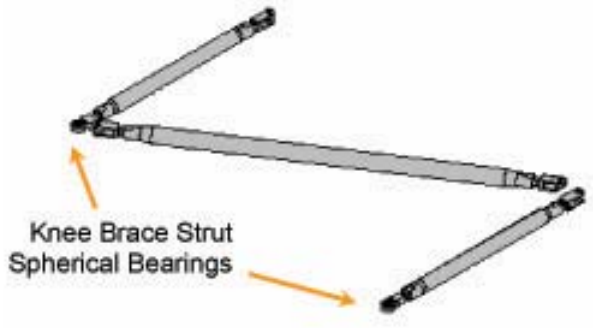

Figure 7. - Rack Knee Brace Assembly

12.2 Verify Knee Brace Strut Spherical Bearings (two) straight.
Refer to Figure 7.

12.3 Slowly rotate Rack up until Knee Brace Strut Spherical Bearings (two) slide inside Rack Upper Attach Mechanism.
Refer to Figures 4, 7.

13. INSTALLING A/L1F1 PIVOT FITTINGS IF REQUIRED

Perform {1.901 AIRLOCK AVIONICS RACK (A/L1F1) PIVOT FITTING REMOVAL/INSTALLATION}, steps 4 to 6 (SODF: ASSY OPS: S&M), then:

```
*  ****************************************************************************
*   If A/L1F1 Pivot Fittings can not be installed:
*      |    Refer to Figure 3.
*      |
*      |    Remove right Locking Screw (Ratchet, 3/8" Drive; 6" Long, 3/8"
*      |    Hex Head, 3/8" Drive).
*      |
*      |    Engage right Lower Launch Restraint 10 to 12 turns until hard
*      |          stop (Ratchet, 3/8" Drive; 6" Long, 3/8" Hex Head, 3/8"
*      |    Drive).
*      |
*      |    Reinstall, snug right Locking Screw (Ratchet, 3/8" Drive; 6" Long,
*      |    3/8" Hex Head, 3/8" Drive).
*      |
*      |    Verify Locking Screw flush with Rack structure.
*      |
*      |    If possible, repeat star block for left Lower Launch Restraint
*
*
****************************************************************************
```

14. ENGAGING UPPER ATTACH MECHANISMS
Refer to Figure 4.

NOTE
Begin at left Upper Attach Mechanism.

14.1 Verify Locking Screw fully unlocked.

CAUTION
Do not force Upper Attach Mechanism pinions. Mechanism should easily engage knee brace spherical bearings.

NOTE
To engage left pinion, turn ↷
To engage right pinion, turn ↶

14.2 Engage pinion into Knee Brace Spherical Bearing until Shear Pin visible at top of mechanism (Ratchet, 3/8" Drive; 6" Long, 3/8" Hex Head, 3/8" Drive).

14.3 Tighten Locking Screw (Ratchet, 3/8" Drive; 6" Long, 3/8" Hex Head, 3/8" Drive).

14.4 Repeat steps 14.1 to 14.3 for right Upper Attach Mechanism.

14.5 Check for FOD around work area within 1 m radius.

15. CLOSEOUT
15.1 Attach UIP Closeout to Rack, 1/4-turn fasteners (two).

15.2 Photo document newly installed BCMs (DCS 760 Camera) (front side).

16. REINSTALLING AV RACK CLOSEOUT PANELS

Table 3. Airlock Closeout Panels.

Installation Order	Panel	Fasteners (5/32" Hex Head)
1	A/L1OF2	12
2	A/L1FD2	13
3	A/L1F2	25
4	Small blue Panel (no label) next to A/L1F2	2

16.1 Reinstall Airlock Closeout Panels, in order per Table 3 (Ratchet, 1/4" Drive; 5/32" Hex Head, 1/4" Drive).

17. REINSTALLING EDDA AND EMUS
17.1 Reinstall EDDA onto A/L1F1 Rack.

17.2 Reinstall EMUs onto EDDAs, as required.

18. POST MAINTENANCE

18.1 Verify P/N of removed BCMs is SEG39128256-301
Record S/N of removed BCM-1: _____
Record S/N of removed BCM-2: _____

18.2 Record S/N of installed BCM-1: _____
Record S/N of installed BCM-2: _____

18.3 Notify **MCC-H** of task completion, S/Ns of removed, installed BCMs.

18.4 Stow BCMs (two) for return, tools, materials.

17-0379 (MSG 087) JLP NPRV CHECKOUT

OBJECTIVE:

Check to see if two NPRV's caps in the JLP are closed, and close by pressing NPRV's cap toward bulkhead.

LOCATION:

JLP1A0, JLP1F0

DURATION:

25 minutes with one crewmember for two NPRVs.

- 5 minutes for preparation
- 10 minutes for Closeout panel removal and installation
- 5 minutes for two NPRVs Checkout
- 5 minutes for closeout

TOOLS:

ISS IVA Toolbox:

Drawer 2:

- 5/32" Hex Head, 1/4" Drive
- Ratchet, 1/4" Drive
- (10-50 in-lbs) Trq Wrench, 1/4" Drive

1. ACCESSING NPRV

WARNING
NPRV and Cabin Duct V-Band clamp threads can be sharp edge. Care must be taken when accessing V-Band clamps.

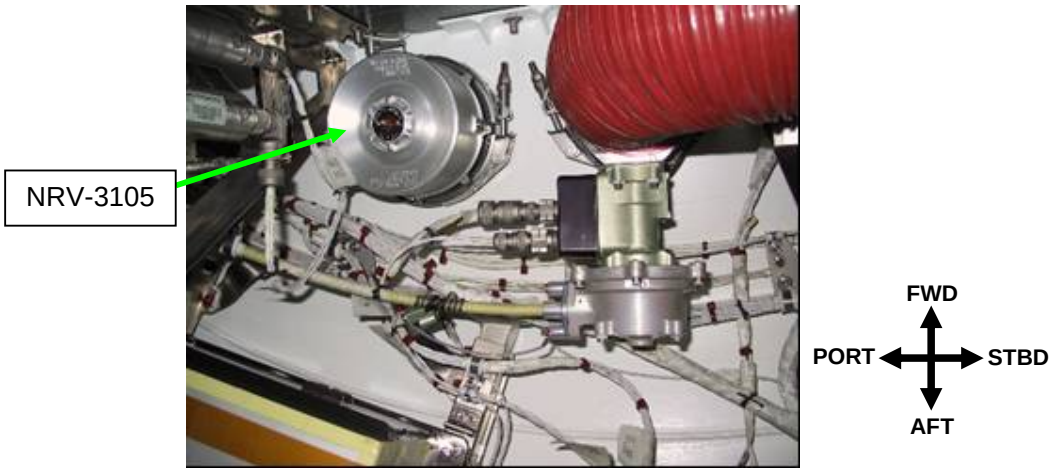

Figure 1.- NRV-3105 (JLP1A0-06 and JLP1A0-07 Removed)

Figure 2.- NRV-3106 (JLP1F0-06 and JLP1F0-07 Removed)

Table 1. NPRV location information

Location [X]	Closeout Panel [Y]	Equipment (Label [W])
JLP1A0	JLP1A0-06	NPRV (NRV-3105)
	JLP1A0-07	
JLP1F0	JLP1F0-07	NPRV (NRV-3106)
	JLP1F0-06	

NOTE
Refer to Table 1 and Figures 1 and 2 in Step 1.1 and 3.2.

[X] 1.1 Remove Closeout Panel [Y], fasteners (four). (Ratchet, 1/4" Drive; 5/32" Hex Head)
Temporarily stow.

2. INSPECTION NPRVS

NPRV Cap

Figure 3. - Deployed NPRV.

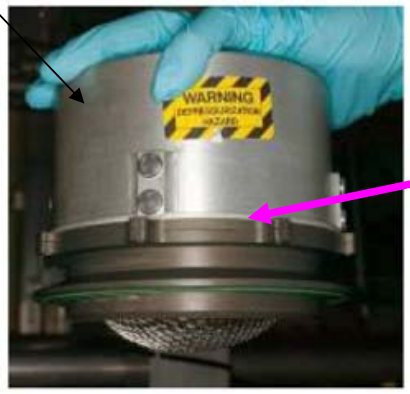

Checking point at step 2.1

Figure 4. - Fully Seated NPRV.

2.1 Verify visually NPRV fully seated.
Refer to Figures 3, 4.

NOTE
If Cap is loose, the NPRV opened during JLP Relocation. It should be re-seated against NPRV.

2.2 Verify by pressing NPRV Cap toward bulkhead until cap snaps into place against base assembly.

2.3 Repeat steps 2.1 and 2.2 for other NPRV.

3. CLOSE OUT

3.1 Check for FOD within 1m.

[X] 3.2 Install four Closeout Panels ([Y]).
Tighten, torque fasteners at each corner of Closeout Panel (one per corner, total four) to 27in-lbs. [Ratchet, 1/4" Drive; 5/32" Hex Head; (10-50 in-lbs) Trq Wrench]

3.3 Notify **SSIPC** of result of inspection NPRVs and task completion.
Stow all tools.

Comm questions for the crew:
In the pre-purge timeframe for EVA 3, Ron experienced problems with HL com, went to RF and then back to HL. Was it a configuration problem or was HL temporarily failed?

New IVA Cleanup procedures from EVA3

A. Retrieve small Ziploc from Ziploc Pantry NOD1O4_C1
B. Label Ziploc "P3 SARJ Tape Sample"
C. Stow Tape Sample into Ziploc
D. Stow Ziploc/Tape Sample into the Ziploc with the EVA wipes in Bag I located in COL1D2 (Returned on STS-124)

Component Swap, FS 2-12

1. Step 8 - change s/n 2081 to s/n 2053
2. Step 9 - add words "Remove & stow EMU battery (s/n 2067)" at beginning of step
3. Step 18 - change s/n 2053 to s/n 2081
4. Step 19 - add words "Remove & stow EMU battery (s/n 2072)" at beginning of step
5. Step 20 – make this step "Install LiOH Canister s/n 2021"

Component Swap, FS 2-13

1. On bottom left EMU graphic (Ga 3017 Initial Configuration) change LTA Brief to s/n 2075
2. Top right EMU graphic (Fs 3015 Final Configuration) change LTA Brief to s/n 2053
3. Bottom right EMU graphic (Ga 3017 Final Configuration) change LTA Brief to s/n 2081

EVA Prep for Transfer to Shuttle, FS 2-14

1. Highlight in lieu of bolding
    a. EMU 3015 – EMU Battery (s/n 2065)
    b. EMU 3017 – EMU Battery (s/n 2066)
2. EMU 3017 – change CCA s/n to 1197
3. Mesh Bag (EVA Systems 1)
    a. Add Fs b/u gloves (s/n 6219)
    b. Add Ga b/u gloves (s/n 6274)
    c. Add LiOH canister s/n 2020
4. EMU Crew Option Kit (Ga)
    a. Add CCA (s/n 1204)

1.605 BSA BATTERY RECHARGE-INIT

Use the following BSA graphic for this activity.

FD10 (GMT 161) BSA Battery Graphic

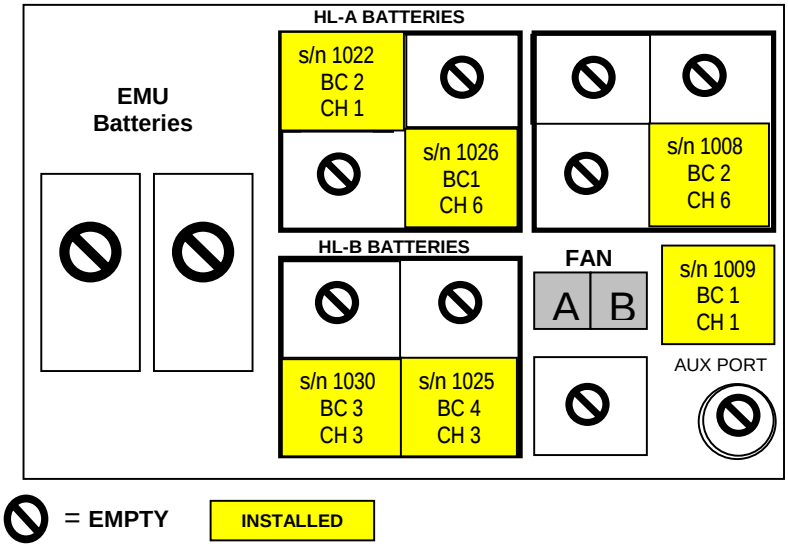

EVA Stow, FS 2-17
Replace the FDF page FS 2-17 with the following.

EVA STOW (90 MIN)

NOTE
This procedure assumes that EVA Transfer to Shuttle is complete

1. Unpack items in mesh bags and stow for landing per the table below

EVA Mesh Bag	Item	Stowage Location
EVA Tools Transfer	◻ 85-ft Tethers (2) (s/n 1002, 1003) ◻ Adj Equip Tethers (6) ◻ EVA Gap Gauge (s/n 1006) ◻ PGT (s/n 1005)	MD Floor Bag D
	◻ Medium ORU Transfer Bag (s/n 1005) ◻ MUT End Effector (s/n 1001)	MD Floor Bag C
	◻ Broom Clip Caddy (MWSTSC)	MD Floor Bag G
EVA Systems 1	◻ EMU Servicing Kit (s/n 5005) ◻ EHIP Batteries (s/n 1011, 1015, 1017, 1019)	Volume H In-board NOTE: Check no loose items stowed in Volume H
	◻ Remaining FDF/ODF items will be stowed per step 2, once procedure complete	Middeck MF57E
	◻ EMU Battery (s/n 2070)	MD Ceil Bag D
	◻ Fs Backup Gloves (s/n 6219)	External Airlock Floor Bag (Bag I)
	◻ Ga Backup Gloves (s/n 6274)	
	◻ LiOH Canister s/n 2020	

2. Stow remaining FDF/ODF items from EVA Systems 1 Mesh Bag in FDF/ODF locker (Middeck MF57E):
   FDF EVA Checklist
   ISS EVA Systems Checklists
   STS-124/1J EMU CONSUMABLES TRACKING CUE CARD
   STS-124/1J BATTERY RECHARGE PLAN CUE CARD (back of Consumables CC)
   STS-124/1J EMERGENCY UNDOCK EVA TRANSFER CUE CARD
   STS-124/1J EXPEDITED SUIT DOFFING CUE CARD (back of Emergency Undock CC)
   CREWLOCK DEPRESS/REPRESS CUE CARDS

3. Stow empty mesh bags in Ext A/L Floor Bag

4. Inform MCC, EVA stow complete

FS 2-17 – rev A

Post ISS EVA Entry Prep, 11-3

1. After step 8, add:
   8.1 Remove GA1 comm cap s/n 1204 from Ga ECOK and temp stow
2. In step 20, add note:
   Stow GA1 comm cap (s/n 1204) and KKO1 comm cap (s/n 1197) in Ga LTA Restraint Bag pocket

17-0386 (MSG 089) JPM RACK UMBILICAL VELCRO REMOVAL

OBJECTIVE:

Remove Velcro from EPS2, DMS2, ECLSS/TCS1 and ECLSS/TCS2 Rack Umbilical to allow rack rotation.

LOCATION:

EPS2 Rack (JPM1D5)
DMS2 Rack (JPM1O1)
ECLSS/TCS1 Rack (JPM1D1)
ECLSS/TCS2 Rack (JPM1D6)

DURATION:

20 minutes
5 minutes per rack

CREW:

One

1. REMOVING VELCRO FROM RACK UMBILICAL

Table 1. Number of Velcro

Rack	Location [X]	Number of Velcro [Y]
EPS2	JPM1D5	six
DMS2	JPM1O1	four
ECLSS/TCS1	JPM1D1	three
ECLSS/TCS2	JPM1D6	four

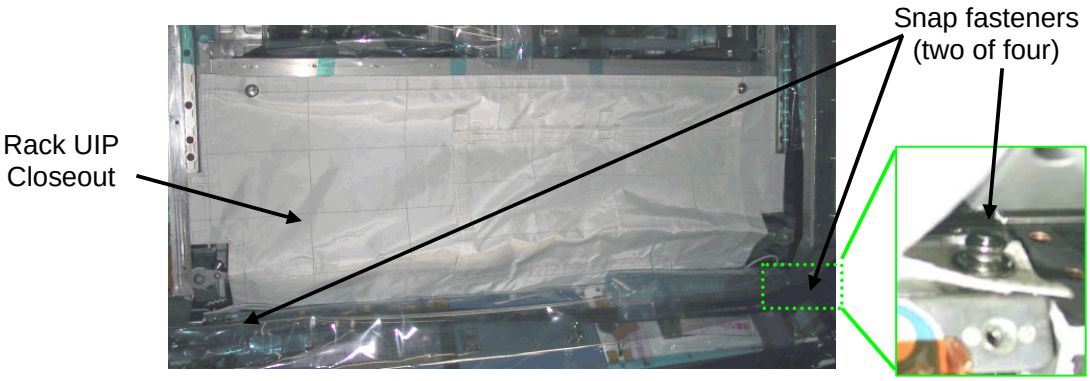

Figure 1.- Rack UIP Closeout.

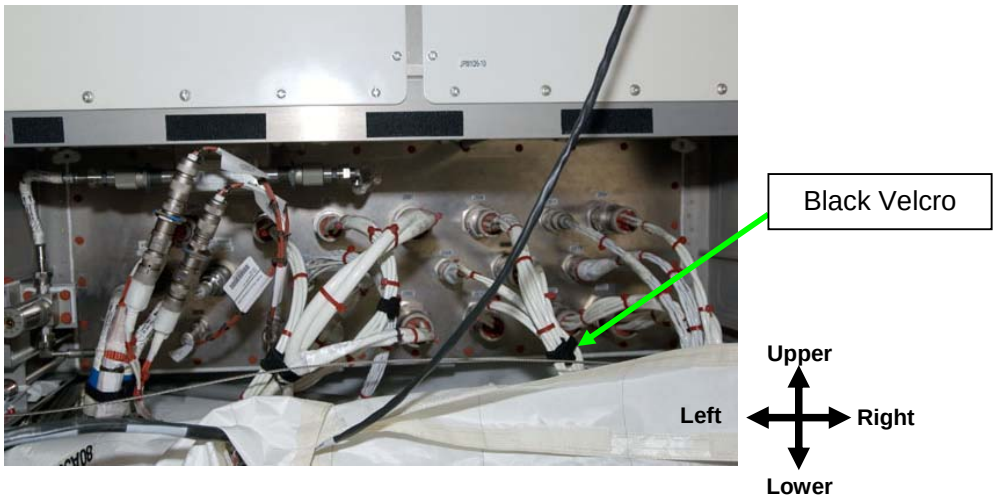

Figure 2.- Rack Umbilical Velcro (EPS2 Rack shown, UIP Closeout Removed)

[X] 1.1 Partially remove Rack UIP Closeout from Standoff, snap fasteners (two)
Refer to Figure 1.

1.2 Remove black Velcro ([Y]) from Umbilical.
Refer to Figure 2.

1.3 Stow Velcro in Ziplock “JPM Rack Front Bag Straps” stowed at EPS2 Rack Front Bracket.

2. CLOSE OUT

2.1 Check for FOD within 1m.

2.2 Photo-document Rack UIP area (DCS 760 Camera).

2.3 Close Rack UIP Closeout to standoff, Snap fasteners (two), Velcro.
Refer to Figure 1.

2.4 Repeat for other Rack.

2.5 Notify **SSIPC** of task completion.

LiOH CHANGEOUT
FLIGHT DAY 3 DOCKING ORBITER WITH ISS
(7 crewmembers/Single Shift/FD 18)

FLIGHT DAY	POS A	POS B	CK CMPLT
LAUNCH	1	2	
PRE FD01	“	“	
POST FD02	3	4	
PRE FD02	5	6*	
POST FD03	“	7	DOCKING
PRE FD03	8	“	
POST FD04	“	“	
PRE FD04	“	9	
POST FD05	“	“	EVA1
PRE FD05	10	“	
POST FD06	“	“	
PRE FD06	“	11	
POST FD07	“	“	EVA2
PRE FD07	12	“	
POST FD08	“	“	
PRE FD08	“	13	
POST FD09	“	“	EVA3
PRE FD09	14	“	
POST FD10	“	“	
PRE FD10		STS-118 ___	
POST FD11	“	“	
MID FD11	STS-118 ___*	STS-118 ___*	ODS HATCH CL
PRE FD11			
POST FD12	STS-118 ___	STS-118 ___	UNDOCK
PRE FD12	STS-118 ___*	STS-118 ___*	
POST FD13	STS-118 ___	STS-118 ___	
PRE FD13	“	STS-118 ___	
POST FD14	STS-118 ___	STS-118 ___	
PRE FD14	STS-118 ___*	STS-118 ___*	
POST FD15	15	16	EOM
PRE FD15	17		
POST FD16	18	19	EOM+1
PRE FD16	20*	21*	
POST FD17	22	23	EOM+2
PRE FD17		24	
POST FD18	25	26	EOM+3

*Re-bag and seal LiOH cans w/ Gray Tape and stow.
(Locations of canisters on back)

NOTE

This card is specifically used for the STS-124 mission with the orbiter conducting single shift ops with a crew size of 7. Changeout scheme reflects FD3 docking with ISS, Vozdukh and dual bed CDRA operation

BACK OF LiOH CHANGEOUT
FLIGHT DAY 3 DOCKING ORBITER WITH ISS

LIOH CANISTER STOWAGE LOCATIONS

ASCENT STOWAGE LOCATIONS

Orbiter:
MD52M (LiOH Box): Cans 1-31*

ISS:
STS-118 Cans 47, 49-61

ENTRY (EOM) STOWAGE LOCATIONS

Orbiter:
MD52M (LiOH Box)*: 31 Cans

*****2 LiOH cans installed in LiOH slots A and B

END OF PAGE 2 OF 2, MSG 091