STS-123 / 1J / A

FD 11 Execute Package

MSG	Page(s)	Title
095A	1 - 15	FD11 Flight Plan Revision **(pdf)**
096A	16	FD11 Mission Summary **(pdf)**
097	17 - 23	FD11 Transfer Message **(pdf)**
098	24 - 25	LiOH Swap **(pdf)**
099	---	Stowage Locations for FD11 Plan (GMT 080/081) **(pdf - Electronic Only)**

Approved by FAO: *Laura Hearon*

Last Updated: Mar 20 2008 2:55PM GMT
JEDI *(**J**oint **E**xecute package **D**evelopment and **I**ntegration), v2.04.0003*

MSG INDEX

MSG NO.	TITLE
95	FD11 Flight Plan Revision
96	FD11 Mission Summary
97	FD11 Transfer Message (16-1394)
98	LiOH Swap
99	Stowage Locations for FD11 Plan (16-1389)

1. Exercise Constraints

   A. The generic exercise constraints that apply to the entire docked timeframe are listed in the table below.

Exercise Constraints Table A: Entire Docked Timeframe

Exercise Constraints
RED limited to 3 sec (squats and heel raises) and 2 sec (situps) between repetitions
HC-1 limited to 3 sec (torso bending and rowing) and 2 sec (hammer throw and forearm bending) between repetitions
Use of theraband or any other exercise band while exercising on Shuttle Ergometer is prohibited, except during EVA prebreathe, and always on CEVIS
Use of ISS hard-mounted exercise equipment during 1-jet PRCS attitude control and reboost is prohibited

   B. The table below summarizes the Shuttle and ISS exercise constraints that are specific for today. These constraints are also noted in your timelines for your reference.

Exercise Constraints Table B: EVA 4

Activity	Exercise Constraints	
	Shuttle	ISS
EVA 4	Orbiter ergometer prohibited during all structural-mounted APFR ops	IRED and HC-1 prohibited during all structural-mounted APFR ops

2. FD10 MMT Summary

   The FD10 MMT met briefly to review mission progress. The content for EVA #4 remains unchanged with the RPCM R&R and TRAD DTO and the team is considering a get-ahead task that will reposition the SPDM Arm 2 to allow removal of several thermal covers. Options for installing the MISSE PECs are still under evaluation for EVA #5. The team is also beginning to refine the orbit adjust plan that will bring in a deorbit opportunity to KSC for end-of-mission lighting conditions. Enjoy the scheduled time off.

3. Words from JAXA

Thank you for the photos of the Space Life Exp Ziplock Bag and Space Poem DVD for JAXA EPO. It would be better if we could see the letters on the ziplock and the DVD more clearly. We scheduled a 30 min activity from GMT81/02:58 to take their photos again. ODF is {US_SODF; Assembly Operations 1J/A: 2. 1J Prep; 2.111 SPACE LIFE EXP AND SPACE POEM DVD PHOTO SESSION}. We recommend to adjust angle of ziplock to avoid white out by camera flash. DVD letters might be clear if you keep the DVD close to your face to be in focus both. Of course, don't forget your smile. Call SSIPC before you turn on JLP fan and JLP GLAs because of power restriction during EVA4.

4. LiOH Changeout

Beginning presleep tonight, you will use STS-118 cans for LiOH Changeouts. Please report the decal numbers of the cans you install to MCC.

The STS-118 cans may have more dust than newer cans. We recommend donning PPE when you perform these changeouts. Masks and gloves are stowed in the LiOH volume and goggles are located in the CCK (MA9N). Masks should only be used once and should be disposed of in the dry trash after use.

You will use STS-118 cans for 11 LiOH changeouts and you have a total of 20 masks in the LiOH volume, so manage your PPE consumables accordingly.

5. LiOH Swap

Today you will be exchanging LiOH cans as well as installing socks on the LiOH cans in the ISS stockpile. Please reference message 098 for LiOH swap and sock installation details.

6. REPLACE PAGES 2-36, 2-38, 2-40, 3-114 THROUGH 3-123.

GMT 03/20/08 (080) 07 08 09 10 11 12 13 14 15 16 17 18

MET β=45 Day 009 009/00 01 02 03 04 05 06 07 08 09 10 11 12

		FD10					FD11
STS-123	CDR GORIE	PRE SLEEP / PMC OCA	*PRE SLEEP		SLEEP		POST SLEEP
STS-123	PLT JOHNSON	PRE SLEEP*			SLEEP	SLEEP	POST SLEEP
STS-123	MS1 BEHNKEN	PRE SLEEP	MASK PB/TOOL CONFIG	PRE SLEEP	SLEEP		POST SLEEP ♣
STS-123	MS2 FOREMAN	PRE SLEEP	10.2 DPRS MASK PB/TOOL CONFIG	PRE SLEEP	SLEEP		POST SLEEP ⊕
STS-123	MS3 DOI	PRE SLEEP			SLEEP		POST SLEEP
STS-123	MS4 LINNEHAN	EXERCISE	PRE SLEEP		SLEEP		POST SLEEP
DN	FE-2 EYHARTS	SPDM ARM2^ PREP WORK	PRE SLEEP-ISS		SLEEP (8.5)		POST SLEEP
EXP	ISS CDR WHITSON	PREP WORK	PRE SLEEP-ISS		SLEEP (8.5)		POST SLEEP
EXP	FE-1 MALENCHENKO	PREP WORK	PRE SLEEP-ISS	MBI* TEX^	SLEEP (8.5)		TEX^ MBI* HAMPD POST SLEEP
UP	FE-2 EXP16 REISMAN	SPDM ARM2^ PREP WORK	PRE SLEEP-ISS		SLEEP (8.5)		SALV POST SLEEP

STS

DAY/NIGHT

ORBIT 143 144 145 146 147 148 149 150 151

TDRS W -171 E -46 Z -275

ORB ATT BIAS -XLV -ZVV

NOTES

^CONFIG *LEB TOWEL CHECK *12 EXP INIT
*HUM SEP CHECK ^20 PUMP OFF

♣HYG BRK/ P
⊕HYG BRK/ P
*12 EXP DSCNCT
^20 PUMP ON

No IRED, HC-1, OR Orbiter Ergometer (APFR during T-RAD) ~~03/20/08 09~~:45:26

REPLANNED

GMT 03/20/08 (080) 12 19 13 20 14 21 15 22 16 23 17 03/21 18 01 19 02 20 03 21 04 22 05 23 06 010/00

MET β= 47 Day 009

| | | |

03/20/08 09:45:26 **REPLANNED**

GMT 03/21/08 (081) 07 08 09 10 11 12 13 14 15 16 17 18

MET β= 48 Day 010 010/00 01 02 03 04 05 06 07 08 09 10 11 12

STS-123	FD11 CDR GORIE	PRE SLEEP	PMC OCA	PRE SLEEP	SLEEP		FD12 POST SLEEP
	PLT JOHNSON	PRE SLEEP#			SLEEP	SLEEP	POST SLEEP
	EV1 MS1 BEHNKEN	♣	PRE SLEEP		SLEEP	SALOG ASPRN	POST SLEEP
	EV2 MS2 FOREMAN	⊕	PRE SLEEP		SLEEP	SALOG ASPRN	POST SLEEP
	MS3 DOI	BRIEF	PRE SLEEP	CDM-A	CDM 4 OPS SLEEP	CDM-D	POST SLEEP
	MS4 LINNEHAN	♦	PRE SLEEP		SLEEP		POST SLEEP
DN	FE-2 EYHARTS	PREP WORK	SPDM STOW	PRE SLEEP-ISS	SLEEP (8.5)	SALV	POST SLEEP
EXP	ISS CDR WHITSON	♣	BSA INIT EVADL	PRE SLEEP-ISS	SLEEP (8.5)		POST SLEEP
	FE-1 MALENCHENKO	PREP WORK		PRE SLEEP-ISS TEX*	SLEEP (8.5)	TEX*	POST SLEEP
UP	FE-2 EXP16 REISMAN	PREP WORK	SPDM STOW	PRE SLEEP-ISS	SLEEP (8.5)		POST SLEEP

STS

DAY/NIGHT

ORBIT 159 160 161 162 163 164 165 166 167

TDRS W -171 E -46 Z -275

ORB ATT BIAS -XLV -ZVV

NOTES

♣POST EVA W/H20,METOX *20 PUMP OFF *20 PUMP OFF

⊕POST EVA W/H20,METOX

♦POST EVA W/H20,METOX

#HUM SEP CHECK

STS-123 (FD10)

GMT Date 03/20 (080) | W | TDRSE | Z | DORB | ORB | MET Day 009 | STS ATI

CDR GORIE | PLT JOHNSON | MS3 DOI | MCC | NOTES

08:00 — 09:00 — 10:00 — 11:00 — 12:00 — 15:00 — 16:00 — 17:00 — 18:00

DORB: 14, 15, 16 — ORB: 149, 150, 151

STS ATI: BIAS-XLV-ZVV

CDR GORIE: SLEEP

PLT JOHNSON: SLEEP

MS3 DOI: SLEEP

FLIGHT SLEEP LOG (ORB OPS, SDBI)

POST-SLEEP ACTIVITY (ORB OPS, CREW SYS) — CDR GORIE

POST-SLEEP ACTIVITY (ORB OPS, CREW SYS) — PLT JOHNSON

POST-SLEEP ACTIVITY (ORB OPS, CREW SYS) — MS3 DOI

FD11 EZ ACTIVITES
- Check TEPC Status
- OCAC Filter Inspect
- Hard Reboot PGSCs (Except WLES & RPOP2)

STS-123 (FD10)

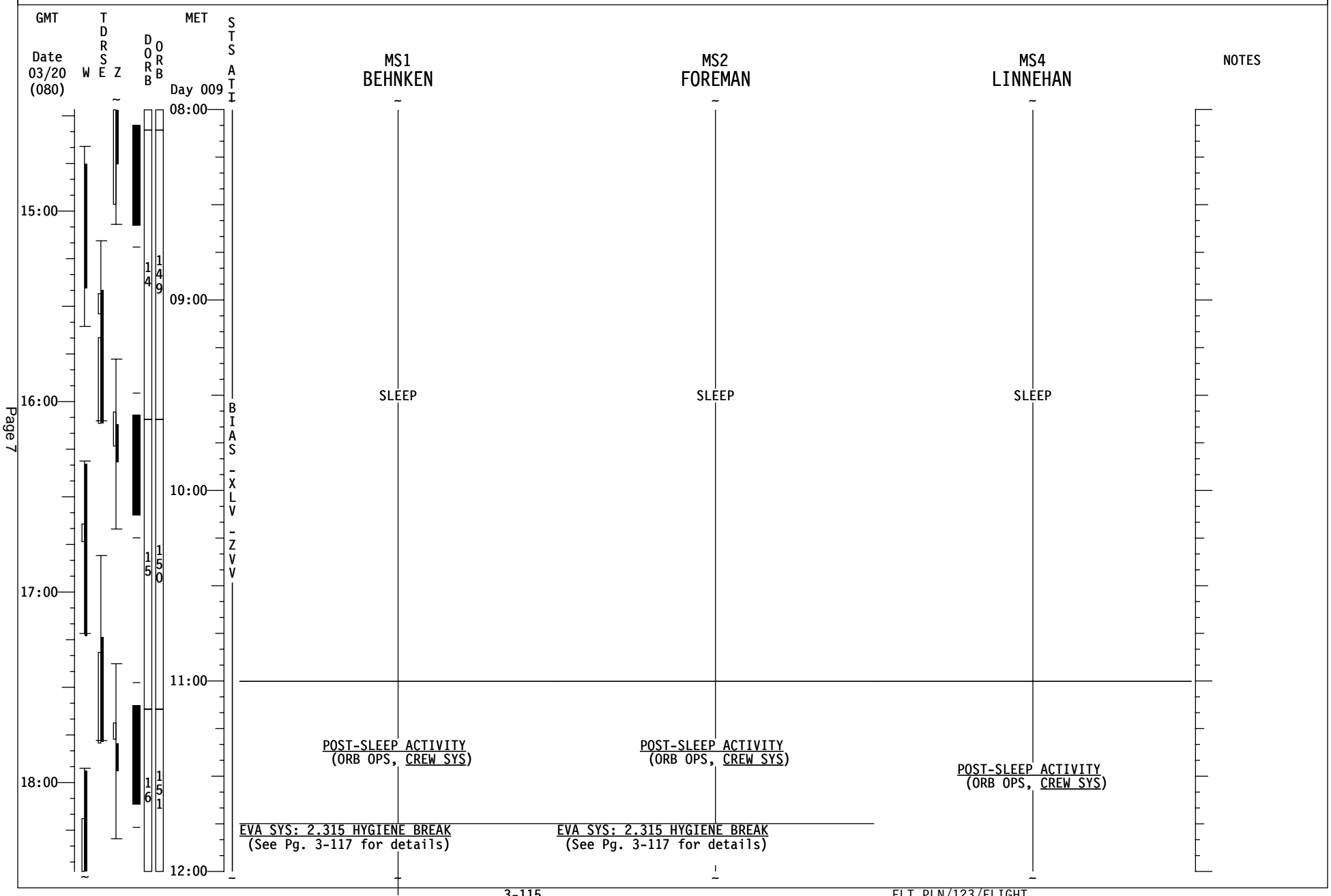
GMT
Date 03/20 (080)
W
TDRSE
Z
DORB
ORB
MET
Day 009
STS ATI
MS1 BEHNKEN
MS2 FOREMAN
MS4 LINNEHAN
NOTES
08:00
09:00
10:00
11:00
12:00
15:00
16:00
17:00
18:00
14
15
16
149
150
151
BIAS-XLV-ZVV
SLEEP
SLEEP
SLEEP
POST-SLEEP ACTIVITY (ORB OPS, CREW SYS)
POST-SLEEP ACTIVITY (ORB OPS, CREW SYS)
POST-SLEEP ACTIVITY (ORB OPS, CREW SYS)
EVA SYS: 2.315 HYGIENE BREAK (See Pg. 3-117 for details)
EVA SYS: 2.315 HYGIENE BREAK (See Pg. 3-117 for details)

STS-123 (FD11)

GMT Date 03/20 (080) | W | TDRS E | TDRS Z | DORB 1 | DORB 2 | DORB 3 | ORB 151 | ORB 152 | ORB 153 | ORB 154 | MET Day 009 | STS ATI

MET	CDR GORIE	PLT JOHNSON	MS3 DOI	MCC	NOTES
12:00	PRIVATE MEDICAL CONFERENCE Perform via A/G 2				
13:00	POST-SLEEP ACTIVITY (ORB OPS, CREW SYS)	POST-SLEEP ACTIVITY (ORB OPS, CREW SYS)	POST-SLEEP ACTIVITY (ORB OPS, CREW SYS)		
14:00	EVA 4 INHIBIT PAD (EVA, TIMELINES) L17 Check MCIU filter screen	SHUTTLE/ISS H2O CNTR FILL (ORB OPS, ECLS) CWC FILL #4 Ref. MSG 025 Fill duration ~52 min.	TRANSFER UPDATE Ref. MSG 097 TRANSFER OPS Ref. Transfer List		
15:00	EXERCISE	SHUTTLE/ISS H2O CNTR FILL (ORB OPS, ECLS) Perform FILL TERMINATION CWC TRANSFER Transfer 1 CWC to ISS	EXERCISE		
16:00	P/TV07 EVA (P/TV FS, SCENES) Setup	LiOH SWAP Ref. Transfer List: Items 26, 27 & 717 Ref. MSG 098			

STS-123 (FD11)

GMT Date 03/20 (080) | W | TDRSE | Z | DORB | ORB | MET Day 009 | STS ATI

MS1 BEHNKEN	MS2 FOREMAN	MS4 LINNEHAN	NOTES
EVA SYS: 2.315 HYGIENE BREAK Note: Start no earlier than 8:40 hrs from end of: *2.305 10.2 PSIA CAMPOUT MASK PREBREATHE* MCC-H performs Steps 1-4,16-20 & 23	EVA SYS: 2.315 HYGIENE BREAK Note: Start no earlier than 8:40 hrs from end of: *2.305 10.2 PSIA CAMPOUT MASK PREBREATHE* MCC-H performs Steps 1-4,16-20 & 23	POST-SLEEP ACTIVITY (ORB OPS, CREW SYS) EVA SYS: 2.315 HYGIENE BREAK Steps 21-29 NOTE: MCC-H performs Step 23	
EVA SYS: 2.320 10.2 PSIA CAMPOUT EVA PREP	EVA SYS: 2.320 10.2 PSIA CAMPOUT EVA PREP	EVA SYS: 2.320 10.2 PSIA CAMPOUT EVA PREP	
EVA SYS: 1.220 EMU PURGE	EVA SYS: 1.220 EMU PURGE	EVA SYS: 1.220 EMU PURGE	
EVA SYS: 1.225 EMU PREBREATHE	EVA SYS: 1.225 EMU PREBREATHE	EVA SYS: 1.225 EMU PREBREATHE	
EVA SYS: CREWLOCK DEPRESS (CC)	EVA SYS: CREWLOCK DEPRESS (CC)	EVA SYS: CREWLOCK DEPRESS (CC)	

Time scale: 19:00, 20:00, 21:00, 22:00; Day 009: 12:00, 13:00, 14:00, 15:00, 16:00

DORB: 16, 1, 2, 3; ORB: 151, 152, 153, 154

BIAS - XLV - ZVV

STS-123 (FD11)

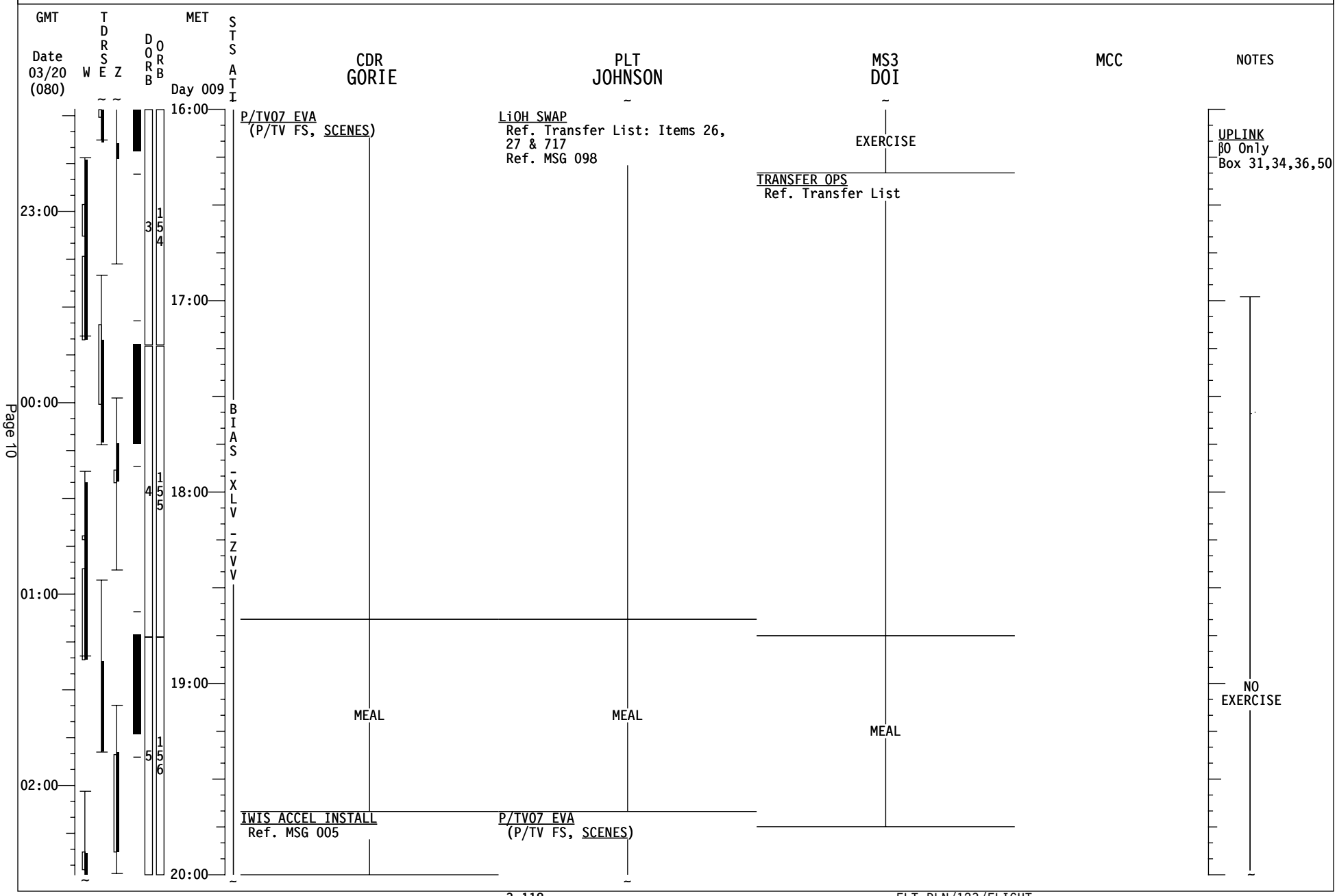
GMT
Date 03/20 (080)
W
TDRSE
Z
DORB
ORB
MET
Day 009
STS ATI
CDR GORIE
PLT JOHNSON
MS3 DOI
MCC
NOTES
16:00
17:00
18:00
19:00
20:00
23:00
00:00
01:00
02:00
3
4
5
154
155
156
BIAS -XLV -ZVV
P/TV07 EVA
(P/TV FS, SCENES)
LiOH SWAP
Ref. Transfer List: Items 26, 27 & 717
Ref. MSG 098
EXERCISE
TRANSFER OPS
Ref. Transfer List
UPLINK
β0 Only
Box 31,34,36,50
MEAL
MEAL
MEAL
NO EXERCISE
IWIS ACCEL INSTALL
Ref. MSG 005
P/TV07 EVA
(P/TV FS, SCENES)

STS-123 (FD11)

GMT Date 03/20 (080) | W | TDRSE | Z | DORB | ORB | MET Day 009 | STS ATI

MET	MS1 BEHNKEN	MS2 FOREMAN	MS4 LINNEHAN	NOTES
16:00	EVA SYS: CREWLOCK POST DEPRESS (CC)	EVA SYS: CREWLOCK POST DEPRESS (CC)		
	CREWLOCK EGRESS	CREWLOCK EGRESS		
	SORTIE SETUP	SORTIE SETUP		
23:00	RPCM R&R	PATCH PANEL		
17:00				
00:00	T-RAD DTO WRKST S/U	T-RAD DTO WRKST S/U		
18:00			IVA SUPPORT	
01:00				
19:00	T-RAD DTO	T-RAD DTO		NO EXERCISE
02:00				
20:00				

DORB: 3 154; 4 155; 5 156

BIAS -XLV -ZVV

STS-123 (FD11)

GMT Date 03/21 (081) | W | TDRSE | Z | DORB | ORB | MET Day 009 | STS ATI | CDR GORIE | PLT JOHNSON | MS3 DOI | MCC | NOTES

Time scale: 03:00, 04:00, 05:00, 06:00

Orbit: 5, 6, 7, 8 — 156, 157, 158, 159

Day 009: 20:00, 21:00, 22:00, 23:00, 00:00

STS ATI: BIAS-XLV-ZVV

CDR GORIE

N2 RPRS USING PL N2 VLVS Init
(ORB OPS, ECLS) Steps 1,3-7
MCC will TMBU SM FDA

TRANSFER OPS
Ref. Transfer List

N2 RPRS USING PL N2 VLVS Term
(ORB OPS, ECLS) Steps 8-13
MCC will TMBU SM FDA

IMU STAR OF OPPTY ALIGN (ORB OPS)

GAP ACTIVATION (GAPs 4,5,6,7)
(ASSY OPS, GAP)

PLT JOHNSON

P/TV07 EVA
(P/TV FS, SCENES)

EXERCISE

MS3 DOI

ASSY OPS: 1.106 JLP VENT FAN
ACT/DEACT-MKAM Step 1 (Act)
Ref. MSG 095, Item 3

ASSY OPS: 2.111 SPACE LIFE EXP &
SPACE POEM DVD PHOTO SESSION
Ref. MSG 099 for Stow Locations
Ref. MSG 095, Item 3

ASSY OPS: 1.106 JLP FAN
ACT/DEACT-MKAM Step 2 (Deact)

TRANSFER OPS
Ref. Transfer List

TRANSFER TAGUP
Coordinate with transfer counterpart

TRANSFER BRIEF
Call down status to MCC

MCC

NOTES

NO EXERCISE

UPLINK
β21 + Mask
Box 31,34,36,50

STS-123 (FD11)

GMT Date 03/21 (081) | W | TDRS E | TDRS Z | DORB 5 6 7 8 | ORB 156 157 158 159 | MET Day 009 | STS ATI BIAS -XLV -ZVV

MET	MS1 BEHNKEN	MS2 FOREMAN	MS4 LINNEHAN	NOTES
20:00	T-RAD DTO	T-RAD DTO		NO EXERCISE
	TOOL CLEAN	TOOL CLEAN		
03:00				
21:00	PLB OPS	PLB OPS	IVA SUPPORT	
04:00	COVER REMOVAL	NODE 2 ACBM LAUNCH LOCK RELEASE		
22:00	EVA 4 SORTIE CLEANUP	EVA 4 SORTIE CLEANUP		
	CREWLOCK INGRESS	CREWLOCK INGRESS		
	EVA SYS: PRE REPRESS (CC)	EVA SYS: PRE REPRESS (CC)		
05:00	EVA SYS: CREWLOCK REPRESS (CC)	EVA SYS: CREWLOCK REPRESS (CC)	EVA SYS: CREWLOCK REPRESS (CC)	
23:00	EVA SYS: 1.240 POST EVA With H2O & METOX MCC-H will perform Steps 44 and 68. Steps 38 & 67 not req'd. In Step 61, stow helmet light batts in BSA per STS-123 Battery Recharge Plan CC (EVA). Rmv O2 Actuator Cvrs/Kapton Tape from WVS REF: 123 CONSUMABLES TRACKING CC (EVA)	EVA SYS: 1.240 POST EVA With H2O & METOX MCC-H will perform Steps 44 and 68. Steps 38 & 67 not req'd. In Step 61, stow helmet light batts in BSA per STS-123 Battery Recharge Plan CC (EVA). Rmv O2 Actuator Cvrs/Kapton Tape from WVS REF: 123 CONSUMABLES TRACKING CC (EVA)	EVA SYS: 1.240 POST EVA With H2O & METOX MCC-H will perform Steps 44 and 68. Steps 38 & 67 not req'd. In Step 61, stow helmet light batts in BSA per STS-123 Battery Recharge Plan CC (EVA). Rmv O2 Actuator Cvrs/Kapton Tape from WVS REF: 123 CONSUMABLES TRACKING CC (EVA)	
06:00				
00:00				

STS-123 (FD11)

GMT Date 03/21 (081) | W | TDRSE | Z | DORB | ORB | MET Day 010 | STS ATI | CDR GORIE | PLT JOHNSON | MS3 DOI | MCC | NOTES

00:00 — TRANSFER BRIEF
Call down status to MCC

PRE-SLEEP ACTIVITY
(ORB OPS, CREW SYS)

07:00

NETMEETING VIDEO CONFERENCING (ORB OPS, PGSC)
Private Medical Conference
KU TDRW: 00:42-01:13 B

B Omit VLHS item in Step 1
Omit Step 3
Use A/G2 for Audio and KFX PGSC

OCA-PMC

01:00

PRE-SLEEP ACTIVITY
(ORB OPS, CREW SYS)
√ HUM SEP for H2O Accumulation

PRE-SLEEP ACTIVITY
(ORB OPS, CREW SYS)

08:00

BIAS-XLV-ZVV

02:00

PRE-SLEEP ACTIVITY
(ORB OPS, CREW SYS)

09:00

CDM ACT (ORB OPS, CDM DTO)

03:00

10:00

SLEEP | SLEEP | SLEEP

04:00

Page 14

STS-123 (FD11)

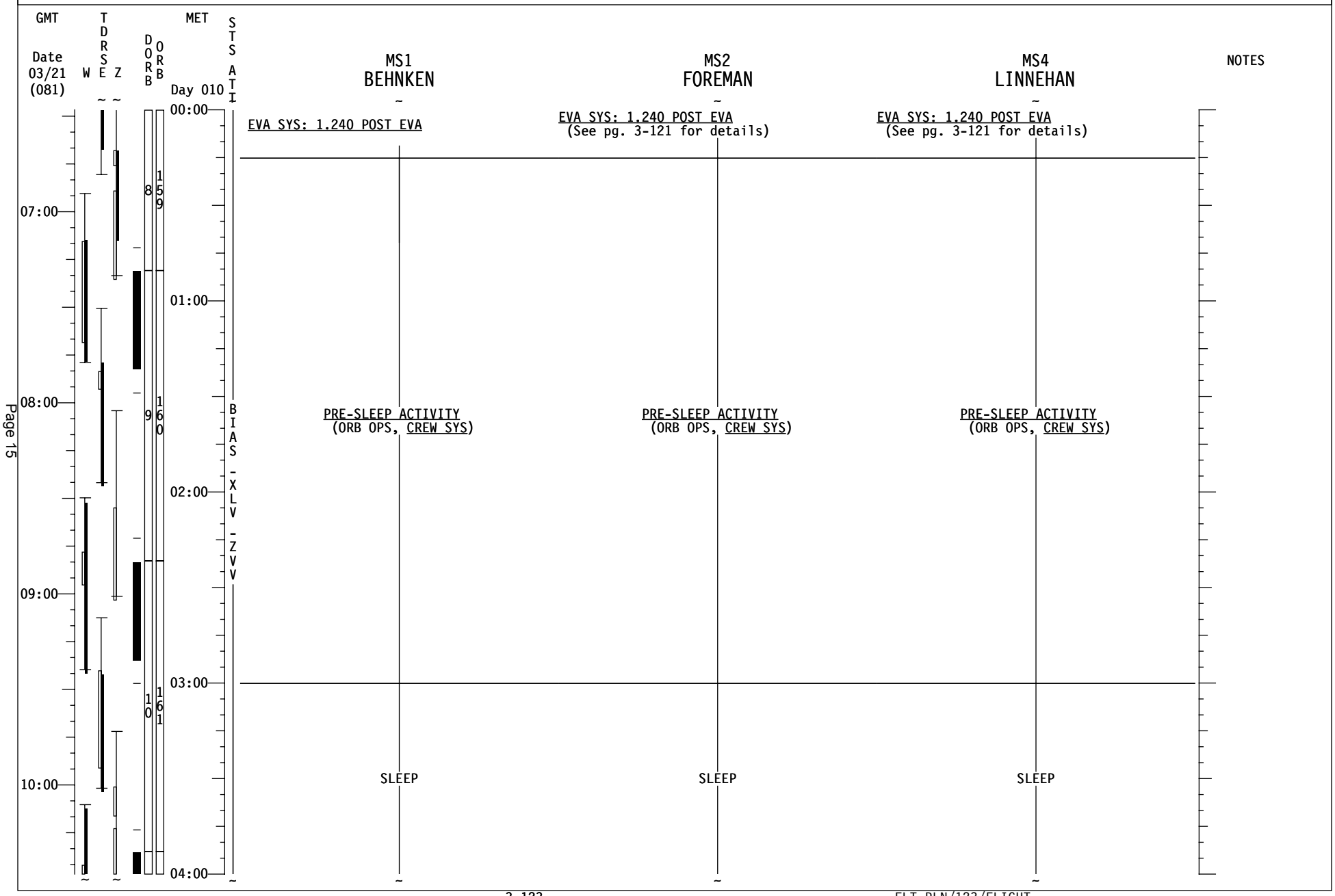
GMT
Date 03/21 (081)
W
TDRSE
Z
DORB
ORB
MET
Day 010
STS ATI
BIAS -XLV -ZVV
00:00
01:00
02:00
03:00
04:00
07:00
08:00
09:00
10:00
8
9
10
159
160
161
MS1 BEHNKEN
MS2 FOREMAN
MS4 LINNEHAN
NOTES
EVA SYS: 1.240 POST EVA
EVA SYS: 1.240 POST EVA (See pg. 3-121 for details)
EVA SYS: 1.240 POST EVA (See pg. 3-121 for details)
PRE-SLEEP ACTIVITY (ORB OPS, CREW SYS)
PRE-SLEEP ACTIVITY (ORB OPS, CREW SYS)
PRE-SLEEP ACTIVITY (ORB OPS, CREW SYS)
SLEEP
SLEEP
SLEEP

MSG 096A - FD11 MISSION SUMMARY

Welcome to the first full day of spring. We know that there are one or two of you Navy folks on board so if you are performing any arcane seafaring rituals, associated with crossing the equator at the equinox, featuring shellbacks and polliwogs, we'd prefer not to hear about it. What happens on orbit stays on orbit. As for EVA4: RPCM R&R, TRAD DTO, ACBM launch lock release, OTCM sock removal, JLP trunnion cover removal, nothin' but net!

YOUR CURRENT ORBIT IS: 186 X 181 NM

NOTAMS:

EDW –	LAKEBED RUNWAYS RED.
NOR –	LAKEBED RUNWAYS GREEN.
HAW –	RWY 31 CLOSED. RWY 13 TODA 8,994'.
WAK –	CLOSED. NOT USABLE.
IKF –	NO AGREEMENT. NOT USABLE.
BEN –	POLITICALLY NOT RECOMMENDED/NOT SUPPORTED.
ZZA –	FIRST 600M (~2,000') OF RWY 30L NOT AVAILABLE. 10,200' REMAINING.
GUA -	RWY 06L BARRIER UP 1565' FROM THRESHOLD.
	RWY 24R BARRIER UP 1785' FROM THRESHOLD

NEXT 2 PLS OPPORTUNITIES:

EDW22 ORB 157 – 09/21:07 (SCT 250 260/10P16)
EDW22 ORB 173 – 10/21:29 (SKC 270/08P13)

OMS TANK FAIL CAPABILITY:

L OMS FAIL: NO R OMS FAIL: NO

LEAKING OMS PRPLT BURN:

L OMS LEAK: ALWAYS BURN RETROGRADE
R OMS LEAK: ALWAYS BURN RETROGRADE

OMS QUANTITIES(%)

L OMS	OX = 34.7	R OMS	OX = 33.8
	FU = 34.3		FU = 33.6

SUBTRACT I'CNCT COUNTER FOR CURRENT OMS QUANTITIES

DELTA V AVAILABLE:

OMS	336 FPS
ARCS (TOTAL ABOVE QTY 1)	42 FPS
TOTAL IN THE AFT	378 FPS
ARCS (TOTAL ABOVE QTY 2)	74 FPS
FRCS (ABOVE QTY 1)	19 FPS
AFT QTY 1	78 %
AFT QTY 2	40 %

THERE ARE NO FAILURE/IMPACT/WORK AROUNDS FOR TODAY.

END OF PAGE 1 OF 1, MSG 096A

Greetings Takao and Bob!

ISS Microbial Air Sampler Kit (item 406a)
On FD07, an ISS Microbial Air Sampler Kit (s/n 1003) was transferred to Bag F for return. We added this to the Transfer List as item 406a. It was later determined that this kit contains unused Petri Dish Packets that should remain on ISS. As such, we've added item 406.1 (7 Petri Dish Packets) with instructions to remove them from the kit and transfer them back to ISS.

LiOH Swap
Today, Box will execute the LiOH Swap and install LiOH Covers on the ISS stockpile LiOH. The LiOH transfer plan has slightly changed; Decal #s STS-123 #1–3 will no longer transfer to ISS. Also, the returning LiOH is staged at NOD1S4_D2. The Transfer List and LiOH swap message have been updated reflect these changes.

A31P Laptop (PGSC)
On FD15, you will deactivate and transfer STS-7 (WLES machine). This has been added to the Resupply Transfer List as item 802.

Additional Return Items
- Item 602.1 (CDs): We've added a ziplock containing (2) CD's to the Return Transfer List. This was temp-stowed by Peggy in NOD2P1.
- Item 902 (Columbus ITCS Sample): Sample will be taken on FD13.
- Item 903 (180mm EVA Lens with lens sleeve assembly): Ready for transfer.

For STS, the Transfer List Excel file, FD11_TransferList_STS123.xls, is located on the KFX machine in **C:\OCA-up\transfer**.

For ISS, the Transfer List Excel file, FD11_TransferList_STS123.xls, is located in **K:\OCA-up\transfer**.

Choreography
- Items 26, 27 & 717 (Box): Swap LiOH cans and install LiOH covers on ISS stockpile LiOH.

Crewmembers Scheduled for Generic Xfer Ops
- Dom – 1:40
- Takao – 5:30

Please update the Transfer List as follows:
In **RESUPPLY** tab,
Replace Resupply Page 6
Replace Resupply Page 10

In **RETURN** tab,
Replace:
Return Page 2
Return Page 3
Return Page 14
Make Pen and Ink change to Return Page 11:

Item 717: Update “Initial Stowage” to NOD1S4_D2

Please call us with questions.
- The Transfer Team

STS-123/1JA Resupply Transfer List

CHNG	☑	FD	Initials	Item #	Item Name	Qty	Initial Stowage	Temp Stowage	Stowage at Undock	Wt (lbs)	PROCEDURES/**Constraints**/ **Comments
X				26	LiOH [Decal #'s STS-123 #~~1-3~~ and STS-123 #22-31]	~~13~~ 10	MD LiOH Box		NOD1S4_D2	91.00	**Transfer FD11 during LIOH SWAP.** **Before closing the NOD1S4_D2 door, ensure all canister handles are collapsed and canisters are not compressed. This is to prevent the handles from cracking the side of other cans in this location.** **Swap with Returning LiOH. Ref item 717.
				27	LiOH Covers - 21 [LiOH Socks]	1 ziplock	MD LiOH Box		NOD1S4_D2	5.93	**Transfer FD11 during LIOH SWAP.** **These will be installed on ISS LiOH per Execute Package message.
	☑	3		28	ECOK (BE)	1 mesh bag	MDDK	ISS A/L		30.00	**Configured on FD02 per EVA PREP FOR XFER and transferred on FD03 per PST DK EVA XFER/RCNFG.
	☑	3		29	ECOK (FM)	1 mesh bag	MDDK	ISS A/L		19.00	**Configured on FD02 per EVA PREP FOR XFER and transferred on FD03 per PST DK EVA XFER/RCNFG.
	☑	3		30	ECOK (LN)	1 mesh bag	MDDK	ISS A/L		20.00	**Configured on FD02 per EVA PREP FOR XFER and transferred on FD03 per PST DK EVA XFER/RCNFG.
	☑	3		31	ECOK (RM)	1 mesh bag	MDDK	ISS A/L		50.00	**Configured on FD02 per EVA PREP FOR XFER and transferred on FD03 per PST DK EVA XFER/RCNFG.

STS-123/1JA Resupply Transfer List

CHNG	☑	FD	Initials	Item #	Item Name	Qty	Initial Stowage	Temp Stowage	Stowage at Undock	Wt (lbs)	PROCEDURES/**Constraints**/ **Comments
				Real Time Additions							
	☑	7		800	ISS Food	n/a	MA16L		Peggy, Leo & Yuri's stomachs	n/a	
	☑	5		801	Sharp Edge Test Swatches	5	MA16L		ISS	n/a	**Peggy will stow in final location per direction from ISO.
X				802	A31p Laptop [PGSC] [s/n 1098] [STS-7 / WLES]	1		STS deployed	NOD1S4_C2 (in 1.0 CTB, s/n 1189)	7.94	**After TBD WLES Prep for Xfer Activity on FD15, remove PGSC harddrive and stow MF71G.** **Remaining internal components transfer, but no other peripherals (i.e. power supply, 1394 Firewire cable, WLE Receiver, LCS cable, Qualtech RS-422 card)**

STS-123/1JA Return Transfer List

CHNG	☑	FD	Initials	Item #	Item Name	Qty	Initial Stowage	Temp Stowage	Stowage at Undock	Wt (lbs)	PROCEDURES/**Constraints**/ **Comments
	☑	5		404	Return Bag 404	0.5 CTB	NOD2P2		MD CEIL PORT 1 (Bag A)	9.46	
	☑	5		405	Return Bag 405	1.0 CTB	NOD2P2		MD CEIL PORT 1 (Bag A)	26.05	
	☑	5		406	Return Bag 406	1.0 CTB	NOD2P2		MD CEIL PORT 1 (Bag A)	40.02	
X				406a	ISS Microbial Air Sampler Kit [s/n 1003] [Old]	1	LAB1D4_D2		MD FLOOR PORT 2 (Bag F)		**This is already stowed in Bag F. **Petri Dish Packets need to be removed from this Kit and taken back to ISS. Ref item 406.1
X				406.1	PETRI DISH PACKET ASSY MICROBIAL AIR SAMPLER [Expiration Date: 05/29/2008]	7 foil pouches	MD FLOOR PORT 2 (Bag F) (in item 406a)		LAB1D4_D2 (in new ISS Microbial Air Sampler Kit, s/n 1004)		**Remove (7) unopened Petri Dish Packets (foil pouches) with expiration date of 05/29/2008. **Transfer back to ISS and stow in new ISS Microbial Air Sampler Kit (s/n 1004).
	☑	5		407	Return Bag 407	1.0 CTB	NOD2P2		MD CEIL PORT 1 (Bag A)	17.65	
	☑	5		408	Return Bag 408 [Photo/TV Bag]	0.5 CTB	NOD2P2		MD CEIL PORT 2 (Bag D)	22.12	
	☑	5		409	Return Bag 409	0.5 CTB	NOD2P2		MD CEIL PORT 2 (Bag D)	28.70	
	☑	5		410	Return Bag 410	1.0 CTB	NOD2P2		MD CEIL PORT 2 (Bag D)	31.41	

STS-123/1JA Return Transfer List

CHNG	☑	FD	Initials	Item #	Item Name	Qty	Initial Stowage	Temp Stowage	Stowage at Undock	Wt (lbs)	PROCEDURES/**Constraints**/ **Comments
	☑	7		600	Return Item 600 [A31p LAPTOP] [s/n 1028]	1	NOD2P2 (in 1.0 CTB, s/n 1372)		MA9J	7.94	**Remove from 1.0 CTB at NOD2P2 and stow in MA9J foam cut out where new laptop launched.
	☑	7		601	Return Item 601 [120V DC POWER SUPPLY] [Blue Brick] [s/n 1007]	1	NOD2P2 (in 1.0 CTB, s/n 1372)		MA9J	4.41	**Remove from 1.0 CTB at NOD2P2 and stow in MA9J foam cut out where new power supply launched.
X				602	Return Item 602 [1E CD STOWAGE CASE ASSEMBLY] [s/n 1019]	1	NOD2P2 (in 1.0 CTB, s/n 1372)		MA9J	3.00	**Remove from 1.0 CTB at NOD2P2 and stow in foam cut out where new CD Case launched. **Ensure item 5 is complete before transferring this case. **This CD Case is already stowed in MA9J. **Pack ziplock of CD's in this case. Ref item 602.1.
X				602.1	CD's [EXPRESS Laptop Release 5] [s/n 0001 and 0002]	1 ziplock of 2 CD's	NOD2P1		MA9J (in CD Case, item 602)		**Stow in 1E CD STOWAGE CASE. Ref item 602.
				603	Return Bag 603	1.0 CTB	NOD2P2		MD CEIL STBD 1 (Bag G)	69.08	**Do not transfer until after FD10 activity T-RAD IV PREP when Bag G will be empty.** ** Disassemble foam in Bag G for return per uplinked 5MLE bag drawing, reconfigure foam as needed and place back into 5MLE bag.
	☑	5		604	Return Bag 604	1.0 CTB	NOD2P2		MD EXT A/L FLOOR	69.54	

STS-123/1JA Return Transfer List

CHNG	☑	FD	Initials	Item #	Item Name	Qty	Initial Stowage	Temp Stowage	Stowage at Undock	Wt (lbs)	PROCEDURES/**Constraints**/ **Comments
			Return Realtime Additions								
				900	Bacteria Filter [s/n's 0100 & 0132]	2	NOD2O5_D		MD FLOOR PORT 2 (Bag E)	8.94	**Stow on top of CTBs and in the center of the 5MLE bag.
				901	Broken Protective Cap [Electrical Plug] [From JLP Bulkhead Connector J7081]	1 Ziplock	NOD2D2 (in ziplock, in 1.0 CTB, s/n 1260 VOK CTB)		MD FLOOR STBD 1 (Bag C)	0.11	**Remove broken cap pieces (5) from ziplock in VOK CTB. Reference the Transfer Book, REFERENCE tab, page REF-4 for instruction on which caps to remove. Stow broken cap pieces (5) in another ziplock for return. **Stow in foam cut out where OHTs launched. Ref picture decal on 5MLE bag for launch location of OHTs.
X				902	Return Ziplock Bag with ITCS Fluid Sample [Columbus sample]	1	Columbus		MF14E	0.18	**Sample taken FD13 per TCS-FLUID-SMPL.
X				903	180mm EVA Lens [with lens sleeve assembly] [s/n 1002]	1	LAB1D3		MA9L	1.9	**Verify lens sleeve assembly is installed on lens.

LiOH Swap

This activity will have you swap STS-123 cans with STS-118 ISS stockpile cans. In addition, you will need to install LiOH socks on the remaining ISS stockpile cans and take a digital photo of each ISS LiOH stockpile stowage location once socks are installed and cans are restowed.

1. Remove used STS-123 Cans 1-6 from the LiOH Box. Put cans 1-3 with blue Nomex LiOH socks in External Airlock (Bag I). Put cans 4-6 in double locker MA9D/F. Wrap 2 of the these 3 cans with towels as shown in the drawing below.

MA9D/F

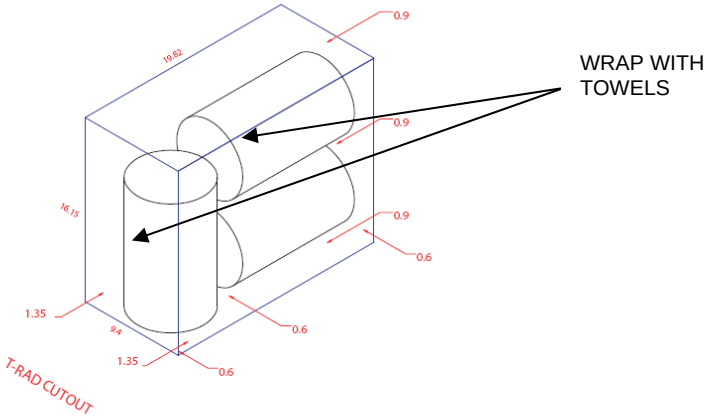

2. Retrieve Nomex LiOH socks from the LiOH box (Reference Transfer List Item 27).

3. Retrieve STS-123 Cans 22-31 (fresh) from LiOH box (Reference Transfer List Item 26). NOTE: All of these cans should have blue Nomex socks on them.

4. Transfer Items 26 and 27 above to ISS NOD1S4_D2. NOTE: The mesh bag currently stowed in NOD1S4_D2 can be removed and temp stowed for transfer in step 9.

5. Install a Nomex LiOH sock onto each LiOH can in the ISS LiOH stockpile located in NOD1S4_D2.
   - Ensure the handles and flight decal numbers are visible with sock installed.
   - Drawstrings should be cinched.
   - Minimize agitation during sock installation.

6. Restow covered LiOH cans in ISS LiOH stockpile as follows:
   - Handles should be collapsed.
   - Cartridges should not be compressed, in order to prevent shell or flight wrapper damage to adjacent cartridges.
   - Restow such that the oldest cartridges (STS-118 and STS-122 flight decal numbers) are most easily accessible to minimize handling on subsequent use.

7. Photo document final stowage configuration similar to photos shown below.

8. Repeat steps 5 through 7 for the LiOH cans stowed at NOD1O4_D2, NOD1O4_E2, and NOD1P4_B2 (US Post Fire Kit).

9. Transfer STS-118 cans 32-46, and STS-118 can 48, which are pregathered in the mesh bag at NOD1S4_D2 to shuttle middeck (Reference Transfer List Item 717).

10. Stow transferred STS-118 cans in the orbiter LiOH box.