STS-123 / 1J / A

FD 08 Execute Package

MSG	Page(s)	Title
064A	1 - 12	FD08 Flight Plan Revision **(pdf)**
065	13	FD08 Mission Summary **(pdf)**
066	---	FD07 MMT Summary **(pdf - Electronic Only)**
067	14 - 19	FD08 Transfer Message **(pdf)**
068	20 - 24	Stowage Locations for FD08 Plan (GMT 077/078) **(pdf)**
069	25	FD8 EVA Deltas **(pdf)**
070	26 - 29	FD09 SLP Berth Video Setup **(pdf)**
071	30 - 35	PRLA RFL Visual Verification **(pdf)**
072	---	RLT-BU SCREEN SAVER DISABLE **(pdf - Electronic Only)**
073	36 - 37	1J Stow Prep Content Labels **(pdf)**

Approved by FAO: *Laura Hearon*

Last Updated: Mar 17 2008 4:59PM GMT
JEDI *(**J**oint **E**xecute package **D**evelopment and **I**ntegration), v2.04.0003*

MSG INDEX

MSG NO.	TITLE
64	FD08 Flight Plan Revision
65	FD08 Mission Summary
66	FD07 MMT Summary
67	FD08 Transfer Message
68	FD08 Stowage Locations for FD08 Plan
69	FD08 EVA Deltas
70	PRLA RFL Visual Verifications
71	PRLA RFL Visual Verifications
72	RLT-BU Screen Saver Disable
73	1J Stow Prep Content Labels

1. Exercise Constraints

A. The generic exercise constraints that apply to the entire docked timeframe are listed in the table below.

Exercise Constraints Table A: Entire Docked Timeframe

Exercise Constraints
RED limited to 3 sec (squats and heel raises) and 2 sec (situps) between repetitions
HC-1 limited to 3 sec (torso bending and rowing) and 2 sec (hammer throw and forearm bending) between repetitions
Use of theraband or any other exercise band while exercising on Shuttle Ergometer is prohibited, except during EVA prebreathe, and always on CEVIS
Use of ISS hard-mounted exercise equipment during 1-jet PRCS attitude control and reboost is prohibited

B. The table below summarizes the Shuttle and ISS exercise constraints that are specific for today. These constraints are also noted in your timelines for your reference.

Exercise Constraints Table B: SPDM Assy, ORU Transfer

Activity	Exercise Constraints	
	Shuttle	ISS
EVA 3	No exercise during EVA ops on the SLP	No unisolated exercise during EVA ops on the SLP

2. EVA 3 Robotics Delta

Message 16-1364A (MSG 62A) contains the latest delta's to the EVA 3 robotics procedure (1.602 EVA3 OTP/THA Install and ORU Transfers). No trajectory or arm position changes were made from what we had sent you for your procedure review. We only updated a couple of the pictures.

3. Photo Ops

After reviewing downlinked imagery it was observed that the camera body's autofocus mode on DCS 760 s/n 1018 is set to C (continuous). This is causing out of focus images. Please check the camera body autofocus mode on DCS 760 s/n 1018 and change it to S (single).

4. MSG 70 & 71 notes

MSG 70 FD09 SLP BERTH Video Setup and MSG 71 PRLA RFL Visual Verification (16-1366) are procedures that are to be used in conjunction with the SLP Berth on FD09. They have been uplinked today to allow time for review if needed.

5. REPLACE PAGES 2-26, 2-38, 3-80 THROUGH 3-87.

No Unisolated Exercise
(EVA on SLP, SPDM Asmbly) 03/17/08 10:24:56

REPLANNED

GMT 03/17/08 (077) 12 13 14 15 16 17 19 20 21 22 23 03/18 01 02 03 04 05 06 007/00

MET β=33 Day 006

STS-123	**FD08** CDR GORIE	POST SLEEP; PMC A/G; POST SLEEP; INHIB; PAD; MCIU*; IMU; EXERCISE; PWR FILL #1; P/TV07 OPS; MEAL; P/TV07 OPS
STS-123	M1 PLT JOHNSON	SLEEP; POST SLEEP; ILLUM; OFF; SSRMS EVA 3 S/U; EXERCISE; SSRMS SUPPORT
STS-123	EV2 MS1 BEHNKEN	POST SLEEP; HYG BRK/ PREBREATHE; A/L REP; 10.2 DPRS; CAMPOUT EVA PREP; EMU; PURGE; EMU PREBREATHE; C_LK DPRS; PDPS; DEGRS; SETUP; OTP/THA RMV/INST; SLP CLNUP; CLPA INSTALL (2); MISSE PEC INST DPLOY; CLNUP; INGRS; PRPS; CRPRS; CLK; ♣
STS-123	MS2 FOREMAN	SALOG; POST SLEEP; HYG BRK/ HATCH CLS; CAMPOUT EVA PREP; EMU; PURGE; EMU PREBREATHE; 14.7 rep; C_LK DPRS; EVA 3 (06:30); IVA SUPPORT; ORU TRANSFER & MISSE 6 LWAPA INSTALL; ⊕
STS-123	MS3 DOI	POST SLEEP; EXERCISE; XFER; UPDRT; P/TV 07 S/U; P/TV07 OPS; MEAL; FAN 1; HARD PANEL RETRIEVE; HARD PANEL ASSY; BAG 11 RTRVL; RLT SCRN SAVER TERM; FAN 0
STS-123	EV1 MS4 LINNEHAN	POST SLEEP; HYG BRK/ PREBREATHE; A/L REP; 10.2 DPRS; CAMPOUT EVA PREP; EMU; PURGE; EMU PREBREATHE; C_LK DPRS; PDPS; DEGRS; SETUP; OTP/THA RMV/INST; ARM2/ EP BLKT RMVL; MISSE6 LWAPA XFER; YAW JNT XFER TO ESP2; DCSU1 XFER TO ESP2; DCSU2 XFER TO ESP2; EVA; CLNUP; INGRS; PRPS; CRPRS; CLK; ♦
DN	M2/D2 FE-2 EYHARTS	POST SLEEP; PREP WORK; MISSE; RED; 14.7; ЕДВ РОДНК INST rep; СВО-ЕДВ РОДНК-INST; MEAL; ЕДВ РОДНК INST; WDS ACT FILL; TVIS; BAG 11 RTRVL; SPDM P GRAP MVR; SPDM GRAP ®
EXP	ISS CDR WHITSON	POST SLEEP; HYG BRK/ HATCH CLS; CAMPOUT EVA PREP; EMU; PURGE; EMU PREBREATHE; C_LK DPRS; BSA-T; EXERCISE CEVIS; MEAL; SALV*; ♥; HARD PANEL RETRIEVE; HARD PANEL ASSY; TVIS; EXER; PRPS; CRPRS; CLK; ⊕
EXP	FE-1 MALENCHENKO	HAMPD; POST SLEEP; DPC; PREP WORK; TEX-20-INSTL; TEX^; TEX_20_FOE; VELO+RED; TVIS; MEAL; ИМП-1; МНТ; СОЖ; Г-28Р СИ STOW; PPSBI; Г-28Р СИ STOW
UP	M2/M1/D1 FE-2 EXP16 REISMAN	POST SLEEP; PREP WORK; ADAPT; SSRMS EVA 3 S/U; EXERCISE CEVIS; SSRMS SUPPORT; SPDM P GRAP MVR; SPDM GRAP ®
STS	DAY/NIGHT	
STS	ORBIT	104; 105; 106; 107; 108; 109; 110; 111
STS	TDRS W -171 E -46 Z -275	
	ORB ATT	BIAS -XLV -ZVV
	NOTES	*FILTER CK; ^20 EXP PREP; ♥P/TV-GLOVE-PHOTO-S/U; *SETUP; ♣POST EVA W/; ⊕POST EVA W/; ♦POST EVA W/; ®PREP WORK

03/17/08 10:24:56 **REPLANNED**

GMT 03/18/08 (078) 07 08 09 10 11 12 13 14 15 16 17 18

MET β=33 Day 007 007/00 01 02 03 04 05 06 07 08 09 10 11 12

STS-123	**FD08** CDR GORIE	OMS*	PRE SLEEP	PMC OCA	PRE SLEEP	ISS EXTERNAL SURVEY																		
	PLT JOHNSON	PRE SLEEP																						
	EV2 MS1 BEHNKEN	POST EVA W/H2O,METOX	PRE SLEEP																					
	MS2 FOREMAN	POST EVA W/H2O,METOX	PRE SLEEP																					
	MS3 DOI	PRE SLEEP				CDM IA	CDM 3 OPS																	
	EV1 MS4 LINNEHAN	POST EVA W/H2O,METOX	PRE SLEEP																					
DN	M2/D2 FE-2 EYHARTS	PREP WORK	PRE SLEEP ISS	SPDM RLS	SPDM OVNITE PK	PRE SLEEP-ISS																		
EXP	ISS CDR WHITSON	POST EVA W/H2O,METOX		EVA DL	BSA INIT	PRE SLEEP-ISS																		
	FE-1 MALENCHENKO	IMS	PREP WORK			PRE SLEEP-ISS																		
UP	M2/M1/D1 FE-2 EXP16 REISMAN	PREP WORK	PRE SLEEP ISS	SPDM RLS	SPDM OVNITE PK	PRE SLEEP-ISS																		
STS	DAY/NIGHT																							
	ORBIT	112			113			114			115			116			117			118			119	
	TDRS W -171																							
	TDRS E -46																							
	TDRS Z -275																							
	ORB ATT	BIAS -XLV -ZVV																						

*HTR RCNFG

NOTES: SPDM BASE CHANGE

STS-123 (FD08)

GMT Date 03/17 (077) | W | TDRSE | Z | DORB 15 | DORB 1 | DORB 2 | ORB 104 | ORB 105 | ORB 106 | MET Day 006 | STS ATI | BIAS -XLV -ZVV

MET	CDR GORIE	PLT JOHNSON	MS3 DOI	MCC	NOTES
12:00		FLIGHT SLEEP LOG (ORB OPS, SDBI)			
19:00	POST-SLEEP ACTIVITY (ORB OPS, CREW SYS)				
13:00	PRIVATE MEDICAL CONFERENCE Perform via A/G 2				
20:00		POST-SLEEP ACTIVITY (ORB OPS, CREW SYS)	POST-SLEEP ACTIVITY (ORB OPS, CREW SYS)		
14:00	POST-SLEEP ACTIVITY (ORB OPS, CREW SYS)				
21:00					
15:00	EVA 3 INHIBIT PAD (EVA, TIMELINES)	TV (ILLUMINATOR OPS) (P/TV, CUE CARDS) ILLUMINATORS OFF - ALL			
	L17 Check MCIU filter screen				
	IMU STAR OF OPPTY ALIGN (ORB OPS)		EXERCISE		
22:00		FD06 SPDM GRAPPLE Ref. MSG 049 Steps 7-9 (Ungrapple)			
	EXERCISE				
16:00			TRANSFER UPDATE Ref. Transfer List & MSG 067		

FD08 EZ ACTIVITES
Check TEPC Status
OCAC Filter Inspect
Hard Reboot PGSCs (Except WLES & RPOP2)

STS-123 (FD08)

GMT Date 03/17 (077) | W | TDRSE | Z | DORB | ORB | MET Day 006 | STS ATI

MS1 BEHNKEN | MS2 FOREMAN | MS4 LINNEHAN | NOTES

12:00

LIQ SALIVA & LOG (ORB OPS, SDBI)

POST-SLEEP ACTIVITY (ORB OPS, CREW SYS)

POST-SLEEP ACTIVITY (ORB OPS, CREW SYS)

19:00

15 | 104

EVA SYS: 2.315 HYGIENE BREAK
Note: Start no earlier than 8:40 hrs from end of: *2.305 10.2 PSIA CAMPOUT MASK PREBREATHE*

MCC-H performs Steps 1-4,16-20 & 23

POST-SLEEP ACTIVITY (ORB OPS, CREW SYS)

EVA SYS: 2.315 HYGIENE BREAK
Note: Start no earlier than 8:40 hrs from end of: *2.305 10.2 PSIA CAMPOUT MASK PREBREATHE*

MCC-H performs Steps 1-4,16-20 & 23

13:00

20:00

EVA SYS: 2.315 HYGIENE BREAK
Steps 21-29

NOTE: MCC-H performs Step 23

BIAS-XLV-ZVV

EVA SYS: 2.320 10.2 PSIA CAMPOUT EVA PREP

EVA SYS: 2.320 10.2 PSIA CAMPOUT EVA PREP

EVA SYS: 2.320 10.2 PSIA CAMPOUT EVA PREP

1 | 105

14:00

21:00

15:00

2 | 106

EVA SYS: 1.220 EMU PURGE

EVA SYS: 1.220 EMU PURGE

EVA SYS: 1.220 EMU PURGE

22:00

EVA SYS: 1.225 EMU PREBREATHE

EVA SYS: 1.225 EMU PREBREATHE

EVA SYS: 1.225 EMU PREBREATHE

16:00

STS-123 (FD08)

GMT Date 03/17 (077) | W | TDRS E | TDRS Z | DORB 2 | DORB 3 | DORB 4 | DORB 5 | ORB 107 | ORB 108 | ORB 109 | MET Day 006 | STS ATI | BIAS -XLV -ZVV

MET	CDR GORIE	PLT JOHNSON	MS3 DOI	MCC	NOTES
16:00	EXERCISE	EXERCISE	TRANSFER UPDATE Ref. Transfer List & MSG 067		
23:00	PWR FILL (ORB OPS, ECLS) Perform FILL #1 Ref. MSG 025		P/TV07 EVA (P/TV FS, SCENES) Setup		
17:00		ROBO: 1.602 EVA3 OTP/THA INSTALL & ORU TRANSFERS Steps 1-15 Ref. MSG 062 & 017	P/TV07 EVA (P/TV FS, SCENES)		UPLINK β0 Only Box 31,34,35
00:00					
18:00					
01:00					NO EXERCISE
19:00	P/TV07 EVA (P/TV FS, SCENES)				
02:00			MEAL		
20:00	MEAL		ASSY OPS: 1.106 JLP VENT FAN ACT/DEACT-MKAM Step 1 (Act) ASSY OPS: 2.104 JLP1PA2 HARD DUMMY PANEL RETRIEVAL		

See page 3-84 for details

STS-123 (FD08)

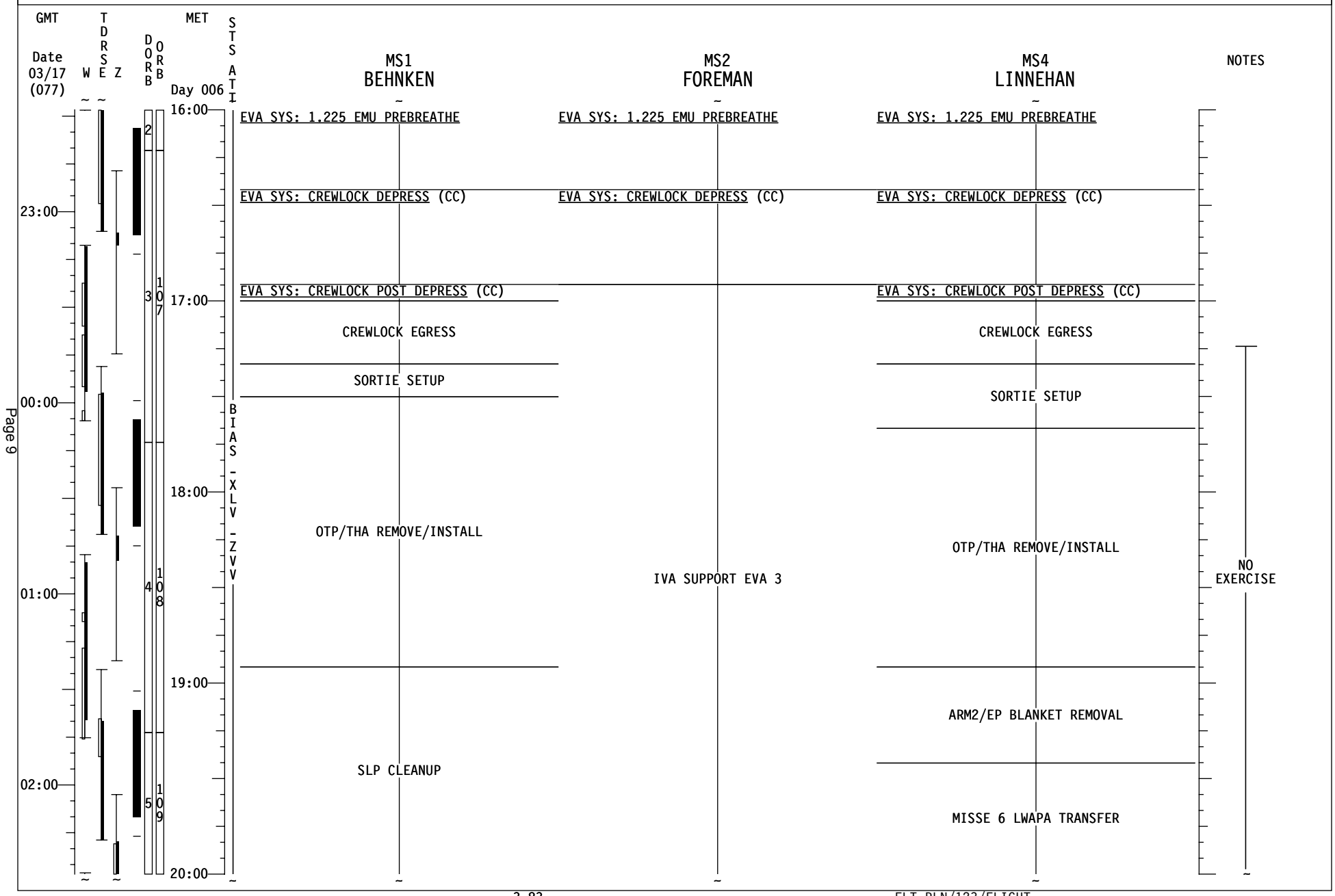
GMT
Date 03/17 (077)
W
TDRS E
Z
DORB
ORB
MET
Day 006
STS ATI
MS1 BEHNKEN
MS2 FOREMAN
MS4 LINNEHAN
NOTES
16:00
17:00
18:00
19:00
20:00
23:00
00:00
01:00
02:00
2
3
4
5
107
108
109
BIAS -XLV -ZVV
EVA SYS: 1.225 EMU PREBREATHE
EVA SYS: CREWLOCK DEPRESS (CC)
EVA SYS: CREWLOCK POST DEPRESS (CC)
CREWLOCK EGRESS
SORTIE SETUP
OTP/THA REMOVE/INSTALL
SLP CLEANUP
IVA SUPPORT EVA 3
ARM2/EP BLANKET REMOVAL
MISSE 6 LWAPA TRANSFER
NO EXERCISE

STS-123 (FD08)

GMT Date 03/18 (078) | W | TDRS E | TDRS Z | DORB 5 6 7 8 | ORB 109 110 111 | MET Day 006 | STS ATI BIAS -XLV -ZVV

03:00 04:00 05:00 06:00

20:00 21:00 22:00 23:00 00:00

CDR GORIE

MEAL

P/TV07 EVA
(P/TV FS, SCENES)

PLT JOHNSON

ROBO: 1.602 EVA3 OTP/THA INSTALL & ORU TRANSFERS
Steps 1-15
Ref. MSG 062 & 017

J-ROBO: 1.401 RLT-BU SCREEN SAVER DISABLE
Use Node2 UOP3 J3
Ref. MSG 072
Ref. MSG 068 for Stow Locations

MS3 DOI

ASSY OPS: 2.104 JLP1PA2 HARD DUMMY PANEL RETRIEVAL
V-band Clamp Threads on JLP Standoff Duct can be a sharp edge hazard. Take care when accessing the Clamps.
Ref. MSG 068 for Stow Locations

ASSY OPS: 2.105 HARD DUMMY PANEL ASSEMBLY & INSTALL
Steps 1.1 - 1.6 for 2 Panels
Ref. MSG 068 for Stow Locations

JLP BAG 11 RETRIEVAL
Ref. MSG 057
Ref. MSG 068 for Stow Locations

ASSY OPS: 1.106 JLP FAN ACT/DEACT-MKAM
Step 2 (Deact)

MCC

NOTES

NO EXERCISE

UPLINK
β21 + Mask
Box 31,34,50

STS-123 (FD08)

GMT Date 03/18 (078) | W | TDRSE | Z | DORB | ORB | MET Day 006 | STS ATI

MS1 BEHNKEN | MS2 FOREMAN | MS4 LINNEHAN | NOTES

03:00 04:00 05:00 06:00

DORB: 5, 6, 7, 8

ORB: 109, 110, 111

STS ATI: BIAS-XLV-ZVV

20:00 21:00 22:00 23:00 00:00

MS1 BEHNKEN

- SLP CLEANUP
- CAMERA-LIGHT PAN-TILT ASSEMBLY (CLPA) #2 INSTALL
- MISSE 6 PEC INSTALL/DEPLOY
- EVA 3 CLEANUP
- CREWLOCK INGRESS
- EVA SYS: PRE REPRESS (CC)
- EVA SYS: CREWLOCK REPRESS (CC)
- EVA SYS: 1.240 POST EVA With H2O & METOX See Page 3-87 for details.

MS2 FOREMAN

- IVA SUPPORT EVA 3
- EVA SYS: 1.240 POST EVA With H2O & METOX See Page 3-87 for details.

MS4 LINNEHAN

- MISSE 6 LWAPA TRANSFER
- SSRMS YAW JOINT XFER TO ESP-2
- DCSU 1 TRANSFER TO ESP-2
- DCSU 2 TRANSFER TO ESP-2
- EVA 3 CLEANUP
- CREWLOCK INGRESS
- EVA SYS: PRE REPRESS (CC)
- EVA SYS: CREWLOCK REPRESS (CC)
- EVA SYS: 1.240 POST EVA With H2O & METOX See Page 3-87 for details.

NOTES

- NO EXERCISE

STS-123 (FD08)

GMT Date 03/18 (078) | W E Z | TDRS | DORB 8 9 10 | ORB 112 113 114 | MET Day 007 | STS ATI

CDR GORIE | PLT JOHNSON | MS3 DOI | MCC | NOTES

00:00 01:00 02:00 03:00 04:00 07:00 08:00 09:00 10:00

A Omit VLHS item in Step 1
Omit Step 3
Use A/G2 for Audio and inform MCC which PGSC will be used.

RCS/OMS HEATER RCNFG
A14 RCS/OMS HTR R POD B - OFF
A - AUTO

PRE-SLEEP ACTIVITY (ORB OPS, CREW SYS)

NETMEETING VIDEO CONFERENCING (ORB OPS, PGSC)
Private Medical Conference
KU TDRW: 01:05-01:40 A

OCA-PMC

BIAS -XLV -ZVV

PRE-SLEEP ACTIVITY (ORB OPS, CREW SYS)

PRE-SLEEP ACTIVITY (ORB OPS, CREW SYS)

PRE-SLEEP ACTIVITY (ORB OPS, CREW SYS)

CDM ACT (ORB OPS, CDM DTO)

STS-123 (FD08)

GMT Date 03/18 (078) | W | TDRS E | TDRS Z | DORB 8 9 10 | ORB 112 113 114 | MET Day 007 | STS ATI BIAS -XLV -ZVV

MS1 BEHNKEN

EVA SYS: 1.240 POST EVA
With H2O & METOX
MCC-H will perform Steps 44 & 68.
Steps 38 & 67 not req'd. In Step 61,
stow helmet light batts in BSA per
STS-123 Battery Recharge Plan CC (EVA).

REF: 123 CONSUMABLES TRACKING
CC (EVA)

PRE-SLEEP ACTIVITY
(ORB OPS, CREW SYS)

MS2 FOREMAN

EVA SYS: 1.240 POST EVA
With H2O & METOX
MCC-H will perform Steps 44 & 68.
Steps 38 & 67 not req'd. In Step 61,
stow helmet light batts in BSA per
STS-123 Battery Recharge Plan CC (EVA).

REF: 123 CONSUMABLES TRACKING
CC (EVA)

PRE-SLEEP ACTIVITY
(ORB OPS, CREW SYS)

MS4 LINNEHAN

EVA SYS: 1.240 POST EVA
With H2O & METOX
MCC-H will perform Steps 44 & 68.
Steps 38 & 67 not req'd. In Step 61,
stow helmet light batts in BSA per
STS-123 Battery Recharge Plan CC (EVA).

REF: 123 CONSUMABLES TRACKING
CC (EVA)

PRE-SLEEP ACTIVITY
(ORB OPS, CREW SYS)

NOTES

MSG 065 - FD08 MISSION SUMMARY

Got the feeling that you're being followed? There may be something to that. ATV has been steadily chasing you around the globe and sometime today should be above the horizon off the station's nose (opposite the velocity vector) today. A free green beverage, of your choice from the galley, to the first to identify the bright star rising in the west. Happy Saint Patrick's Day.

YOUR CURRENT ORBIT IS: 186 X 181 NM

NOTAMS:

EDW –	LAKEBED RUNWAYS RED.
NOR –	LAKEBED RUNWAYS GREEN.
HAW –	RWY 31 CLOSED. RWY 13 TODA 8,994'.
WAK –	CLOSED. NOT USABLE.
IKF –	NO AGREEMENT. NOT USABLE.
BEN –	POLITICALLY NOT RECOMMENDED/NOT SUPPORTED.
ZZA –	FIRST 600M (~2,000') OF RWY 30L NOT AVAILABLE. 10,200' REMAINING.
GUA -	RWY 06L BARRIER UP 1565' FROM THRESHOLD.

NEXT 2 PLS OPPORTUNITIES:

EDW22 ORB 111 – 06/23:09 (FEW250 280/05P08)
EDW22 ORB 126 – 07/21:57 (SCT250 230/07P11)

OMS TANK FAIL CAPABILITY:

L OMS FAIL: NO R OMS FAIL: NO

LEAKING OMS PRPLT BURN:

L OMS LEAK: ALWAYS BURN RETROGRADE
R OMS LEAK: ALWAYS BURN RETROGRADE

OMS QUANTITIES(%)

L OMS	OX = 34.7	R OMS OX = 33.8
	FU = 34.3	FU = 33.6

SUBTRACT I'CNCT COUNTER FROM CURRENT OMS QUANTITIES

DELTA V AVAILABLE:

OMS	348 FPS
ARCS (TOTAL ABOVE QTY 1)	41 FPS
TOTAL IN THE AFT	389 FPS
ARCS (TOTAL ABOVE QTY 2)	73 FPS
FRCS (ABOVE QTY 1)	24 FPS
AFT QTY 1	79 %
AFT QTY 2	41 %

There are no FIWs today.

END OF PAGE 1 OF 1, MSG 065

FD07 MMT Summary

The FD07 MMT met briefly to review mission progress. The team was statused on the ISS systems issues that were recently experienced; however, none of them are significant impacts to operations. Congratulations on a successful EVA #2!

EVA Status: The duration of EVA #2 was 7 hours 8 minutes with the SPDM Expandable Diameter Fasteners requiring some extra effort to release them. Both gloves for EV3 exhibited significant RTV delamination during the EVA. The ground team has assessed the EV3 gloves and they will not be used for subsequent EVAs. A minor boot fit issue for EV3 is being worked and the team is confident this issue will be resolved for EVA #4. The team is also considering the removal of the tape that was placed on the D-handle.

Greetings Takao and Bob!

Bacteria Filters
We've added 2 Bacteria Filters to the Return Transfer List. These are item 900 and are ready to be transferred at your discretion.

Broken Protective Cap
We've added to the Return Transfer List the broken protective cap that was removed from JLP Bulkhead Connector J7081 during Vestibule Outfitting Prep. This is now item 901. We've also uplinked a picture to help you separate the pieces of the broken cap from the caps that need to remain on-orbit for future 1J tasks.

Saliva Collection Pouch Assy (item 722)
We've removed Peggy's saliva pouch from the Return Transfer List, only Garrett's will return.

For STS, the Transfer List Excel file, FD08_TransferList_STS123.xls, is located on the KFX machine in **C:\OCA-up\transfer**.

For ISS, the Transfer List Excel file, FD08_TransferList_STS123.xls, is located in **K:\OCA-up\transfer**.

Crewmembers Scheduled for Generic Xfer Ops

- No generic transfer scheduled until FD11

Please update the Transfer List as follows:

In **RETURN** tab,
Replace:
Return Page 3
Return Page 5
Return Page 12

Insert Return Page 14

In **REFERENCE** tab,
Insert Page REF – 4

Please call us with questions.
- The Transfer Team

STS-123/1JA Return Transfer List

CHNG	☑	FD	Initials	Item #	Item Name	Qty	Initial Stowage	Temp Stowage	Stowage at Undock	Wt (lbs)	PROCEDURES/**Constraints**/ **Comments
	☑	7		600	Return Item 600 [A31p LAPTOP] [s/n 1028]	1	NOD2P2 (in 1.0 CTB, s/n 1372)		MA9J	7.94	**Remove from 1.0 CTB at NOD2P2 and stow in MA9J foam cut out where new laptop launched.
	☑	7		601	Return Item 601 [120V DC POWER SUPPLY] [Blue Brick] [s/n 1007]	1	NOD2P2 (in 1.0 CTB, s/n 1372)		MA9J	4.41	**Remove from 1.0 CTB at NOD2P2 and stow in MA9J foam cut out where new power supply launched.
	☑	7		602	Return Item 602 [1E CD STOWAGE CASE ASSEMBLY] [s/n 1019]	1	NOD2P2 (in 1.0 CTB, s/n 1372)		MA9J	3.00	**Remove from 1.0 CTB at NOD2P2 and stow in foam cut out where new CD Case launched. **Ensure item 5 is complete before transferring this case.
X				603	Return Bag 603	1.0 CTB	NOD2P2		MD CEIL STBD 1 (Bag G)	69.08	**Do not transfer until after FD10 activity T-RAD IV PREP when Bag G will be empty.** **~~Reconfigure~~ Disassemble foam in Bag G for return per uplinked 5MLE bag drawing, reconfigure foam as needed and place back into 5MLE bag.
	☑	5		604	Return Bag 604	1.0 CTB	NOD2P2		MD EXT A/L FLOOR	69.54	

[ ] - notes included by transfer team, - not on actual label

STS-123/1JA Return Transfer List

CHNG	☑	FD	Initials	Item #	Item Name	Qty	Initial Stowage	Temp Stowage	Stowage at Undock	Wt (lbs)	PROCEDURES/**Constraints**/ **Comments
X				607	Return Item 607 [BRIEF/ WAIST ASSEMBLY]	1	NOD2P2		MD CEIL STBD 1 (Bag G)	36.50	**Do not transfer until after FD10 activity T-RAD IV PREP when Bag G will be empty.** **~~Reconfigure~~ Disassemble foam in Bag G for return per uplinked 5MLE bag drawing, reconfigure foam as needed and place back into 5MLE bag.
				608	Return Item 608 [CDRA Bed]	1 jettison stowage bag	NOD2P2		MD FLOOR PORT 1 (Bag B)	94.00	**Add foam/clothing to 5MLE Bag to fill in sides for return.**
				609	Return Item 609 [Sample/Purge Kit]	1	NOD2P2 (in 1.0 CTB, s/n 1372)		MD FLOOR PORT 2 (Bag F)	2.89	**Remove from 1.0 CTB at NOD2P2 and stow in Bag F.
	☑	5		610	Return Item 610 [Flexible Ventilation Duct 13']	1	NOD2P2		MD CEIL PORT 2 (Bag D)	6.60	
				611	Return Item 611 [A31p LAPTOP] [s/n 1087]	1	NOD2P2 (in 1.0 CTB, s/n 1372)		LW MAR	7.94	**Remove from 1.0 CTB at NOD2P2 and stow in LW MAR.

[ ] - notes included by transfer team, - not on actual label

STS-123/1JA Return Transfer List

CHNG	☑	FD	Initials	Item #	Item Name	Qty	Initial Stowage	Temp Stowage	Stowage at Undock	Wt (lbs)	PROCEDURES/**Constraints**/ **Comments
				718	Multimeter [Old] [s/n 1006]	1	LAB Deployed		MF28G in IFM Tools Stowage Tray (in Multimeter Kit)	1.35	**Do not transfer kit or leads.** **Swapped with resupply multimeter per item 39.
	☑	7		719	Radiation Area Monitor [RAM] [blue]	1 ziplock	ISS Deployed		MF43K (in 0.5 CTB, s/n 1327)	0.36	**RAMs removed FD06 during timelined activity RAM INSTL.
				720	RPCM-E TYPE 5 [s/n X800390]	1	ISS External	ISS A/L (in Crewlock Bag)	MD CEIL PORT 2 (Bag D)	9.62	**Removed EVA 4. **Wrap RPCM in towel or clothing before stowing for return.
				721	Integrated Immune Saliva Collection Kit [s/n 1006]	1	in-use by Leo		MD CEIL PORT 2 (Bag D)	1.5	**On hatch closure day, transfer FE-2 DN kit after saliva collection activities.**
X				722	Saliva Collection Pouch Assy [Labeled Used]	~~2~~ 1	in-use by Garrett ~~and Peggy~~		MF43K (in 0.5 CTB, s/n 1327)	0.08	**On hatch closure day, transfer FE-2 EXP 16 ~~& ISS CDR~~ used saliva pouch assy after saliva collection activities.**
				723	Blood Sample Sleeve	1	in-use by Garrett		MF43K (in 0.5 CTB, s/n 1327)	0.11	**On hatch closure day, transfer FE-2 EXP 16 sleeve for return after blood collection activities.**

[ ] - notes included by transfer team, - not on actual label

STS-123/1JA Return Transfer List

CHNG	☑	FD	Initials	Item #	Item Name	Qty	Initial Stowage	Temp Stowage	Stowage at Undock	Wt (lbs)	PROCEDURES/**Constraints**/ **Comments
			Return Realtime Additions								
X				900	Bacteria Filter [s/n's 0100 & 0132]	2	NOD2O5_D		MD FLOOR PORT 2 (Bag E)	8.94	**Stow on top of CTBs and in the center of the 5MLE bag.
X				901	Broken Protective Cap [Electrical Plug] [From JLP Bulkhead Connector J7081]	1 Ziplock	NOD2D2 (in ziplock, in 1.0 CTB, s/n 1260 VOK CTB)		MD FLOOR STBD 1 (Bag C)	0.11	**Remove broken cap pieces (5) from ziplock in VOK CTB. Reference the Transfer Book, REFERENCE tab, page REF-4 for instruction on which caps to remove. Stow broken cap pieces (5) in another ziplock for return. **Stow in foam cut out where OHTs launched. Ref picture decal on 5MLE bag for launch location of OHTs.

[ ] - notes included by transfer team, - not on actual label

Cap from JLP bulkhead connector J7093
(used during 1J A&C, to be retained onboard)

Caps(2) from Node2 to JLP power jumper cable
(to be retained onboard)

Five(5) piece parts of the broken cap from JLP bulkhead J7081
(**to be returned to ground for analysis**)

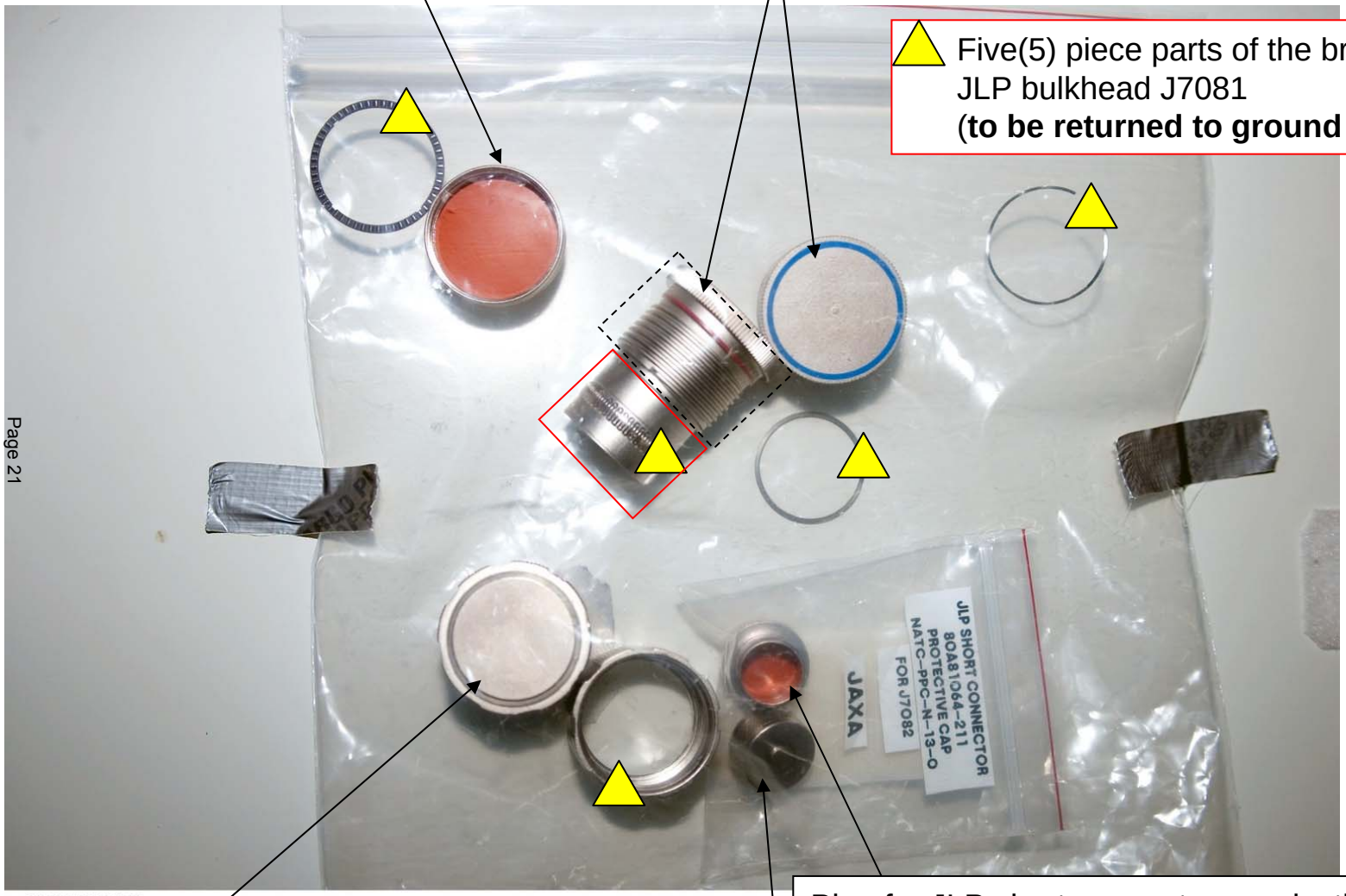

S123E006478

Plug for JLP short connector now instlalled on J7082
(used during 1J A&C, to be retained onboard)

Cap from Node2 Zenith bulkhead connector J65
(to be retained onboard)

Cap for JLP bulkhead connector J7082
(to be retained onboard)

Contents:

Timeline Procedures:
IMMN-1JA SALIVA-S/U
JLP-RACK-HARD PANEL
JLP-PANEL-DUMMY ASSY
JLP-BAG 11 RTRVL
RLT-BU SCRN SAVER DISABLE

Tasklist Procedures:
HRF RACK ACOUSTIC MOVE
MELFI-VEL STRAP-RMV
MSG-BATTERY-REMOVE
TRQ-FSS-JMPR-QD
NOD2SD2-BBA-R&R
EHS-CO2-SDTO MON

Timeline Procedures:

IMMN-1JA SALIVA-S/U						
2.002 Saliva Collection for Integrated Immune						
Type: Standard			**IMS Plan: No**			
#	**LOCATION**	**ITEM NAME**	**P/N**	**S/N**	**B/C**	**Notes**
1	**LAB1O3_B1**	Integrated Immune Saliva Collection Kit	SJG46121521-301	1008	HRF07574J	NOTIFY POIC if different S/N or B/C used.

JLP-RACK-HARD PANEL **JLP-PANEL-DUMMY ASSY**						
2.104 JLP1PA2 HARD DUMMY PANEL RETRIEVAL **2.105 HARD DUMMY PANEL ASSEMBLY AND INSTALLATION**						
Type: Standard			IMS Plan: No			
#	**LOCATION**	**ITEM NAME**	**P/N**	**S/N**	**B/C**	**Notes**
1	**NOD1D4_G2** Drawer 2	3/16" Hex Head, 1/4" Drive	TMA6E	-	-	
2		6" Ext, 1/4" Drive	TMXK60	-	-	
3		2" Ext, 1/4" Drive	TMXK2	-	-	

4	**NOD2 Deployed** Mesh Bag: VOK Tools	1/8" Hex Head, 1/4" Drive	TMA4E	-	-	
5		Ratchet, 1/4" Drive	TM830	-	-	
6		Inspection Mirror	1016T2	-	-	
7	**NOD2 Deployed** Mesh Bag: VOK Tools	DCS 760 Camera	SEZ33113001-302	ANY	ANY	
8		Dry Wipe	-	-	-	
9	**NOD2D2 JEM BAG14**	Hard Dummy Panel Strap	80AS51745-105	-	Crew Pref	**REPORT** B/C to SSIPC.
Type: Restow			IMS Plan: No			
10	**JLP1F2 Ryutai Rack Front**	Hard Dummy Panel [QTY:1 or 2]	80A96090-101	-	-	Secured by Hard Dummy Panel strap
11	**JLP Deployed** 24" x 24" Ziplock Bag labeled "JEM Straps"	Velcro strap [QTY:4]	-	-	-	
12	**NOD2 Deployed** 2.0 CTB: JEM Launch Support Equipment Bag S/N 1080, B/C 006726J	Bracket [QTY:4]	-	-	-	

1

JLP-BAG 11 RTRVL						
16-1356 JLP1PA1 JEM BAG 11 RETRIEVAL						
Type: Restow			IMS Plan: No			
1	**JLP Temp Stow (Crew pref)**	JEM Bag 11	-	-	-	This bag contains Hard Dummy Panel Straps[Qty 16], BDS Console Interface Panel and RMS Console Cable Cover.
2	**JLP Deployed** Jettison Stowage Bag	CUSHION (from JEM Bag 11) [Qty 5]	80AS56851-103 80AS56851-105 80AS56851-107 80AS56851-109 80AS56851-113			Stage with other CUSHION. CUSHION will be staged for trash.

2

RLT-BU SCRN SAVER DISABLE						
1.401 RLT-BU SCREEN SAVER DISABLE						
Type: Standard			IMS Plan: No			
#	**LOCATION**	**ITEM NAME**	**P/N**	**S/N**	**B/C**	
1	**JLP1S2_B2 (EPS1 Rack)** TRAY-EPS1-4, „JEMRMS Console Kit"	A31p Laptop	SEG33115360-303	1062	POC20582J	
2		A31p 120VDC Power Supply	SEG33116412-303-	1323	POC10330J-	
3		Enhanced A31p 16V DC Power Cable	SEG33116459-301	1024	POC10191J	
4		US DC Power and 1553 Cable	SEZ39129268-303	6067	-	

Tasklist Procedures:

HRF RACK ACOUSTIC MOVE						
2.026 HRF Rack Acoustic Closeout Placement and Drawer Modifications						
Type: Standard			**IMS Plan: No**			
#	**LOCATION**	**ITEM NAME**	**P/N**	**S/N**	**B/C**	**Notes**
1	**Crew Preference**	Cable Tie [6]	-	-	-	
2	**LAB1P4_J2**	HRF ISIS Holder	SDG46118532-301	-	-	
3	**LAB1S2_C2**	HRF CSD Holder	SDG46118533-301	-	-	
4	**LAB1S2_K1**	HRF Rack Acoustic Closeout	SEG46118506-301	-	-	
5		HRF Workstation 2 Closeout	SEG46118506-303	-	-	

MELFI-VEL STRAP-RMV						
4.008 MELFI REMOVAL OF VELCRO STRAPS FROM DEWARS						
Type: Standard			IMS Plan: No			
#	**LOCATION**	**ITEM NAME**	**P/N**	**S/N**	**B/C**	**Notes**
1	**Crew Preference**	12 X 12 ziplock bag	-	-	-	
2	**LAB1O4_B1**	WHITE GLOVES	03291-1	any	any	
Type: Restow			IMS Plan: No			
3	**Dry Trash**	**Velcro straps**	-	-	-	

MSG-BATTERY-REMOVE						
4.036 MSG VIDEO RECORDER BATTERY REMOVAL						
Type: Standard			**IMS Plan: No**			
#	**LOCATION**	**ITEM NAME**	**P/N**	**S/N**	**B/C**	**Notes**
1	**NOD1O4_C1**	6x6 Ziplock Bag [6]	-	-	-	
2	Ziplock Pantry (a.k.a. Large Ziplock)	12x12 Ziplock Bag	-	-	-	
3	**COL1O4_C1**	MSG 8MM VIDEO RECORDER	7009.80.AE	01-474	00MSG003M	
4	1.0 CTB Labeled MSG HARDWARE 2 S/N 1317 B/C 010653J	MSG DIGITAL VIDEO RECORDER	7009.80.AD	01-472	00MSG004M	
Type: Restow			**IMS Plan: No**			
5	**COL1O4_A1**	12x12 Ziplock Bag Labeled " VaLi Batteries Return to MSFC"	-	-	-	
6	1.0 CTB MSG Hardware S/N 1323 B/C 010659J	VaLi Batteries (6 Used)	-	-	-	

TRQ-FSS-JMPR-QD						
16-1060 QD TIGHTENING OF FSS JUMPERS						
Type: Standard			IMS Plan: No			
#	**LOCATION**	**ITEM NAME**	**P/N**	**S/N**	**B/C**	**Notes**
1	**LAB1O6**	FSS-64-2 Jumper	683-17111-22	000001	00006441J	CWC M ADAPTER
2	1.0 CTB: FSS, S/N 1136, B/C 004130J	FSS-68-1 Jumper	683-17111-13	000001	00006442J	JUMPER ADAPTER-3/4M
3		FSS-68-2 Jumper	683-17111-14	000001	00006415J	
4		FSS-69-1 Jumper	683-17111-15	000001	00006418J	JUMPER ADAPTER-3/4F
5		FSS-69-2 Jumper	683-17111-16	000001	00006443J	JUMPER ADAPTER-3/4F
6		FSS-77-1	683-17111-17	000001	00012275J	
7		FSS-77-2	683-17111-18	000001	00012274J	

NOD2SD2-BBA-R&R						
1.2.403 BASEPLATE BALLAST ASSEMBLY R&R						
Type: Standard			IMS Plan: No			
#	**LOCATION**	**ITEM NAME**	**P/N**	**S/N**	**B/C**	**Notes**
1	**LAB1O5_G**	Baseplate Ballast Assembly	219011	127	00035238K	
Type: Restow			IMS Plan: No			
2	**LAB1O5_G**	Baseplate Ballast Assembly	219011	73	00002617M	

1

EHS-CO2-SDTO MON						
16-0876 CARBON DIOXIDE MAPPING AND PERSONAL MONITORING						
Type: Standard			IMS Plan: No			
#	**LOCATION**	**ITEM NAME**	**P/N**	**S/N**	**B/C**	**Notes**
1	**LAB1S3**	CDM	SEG46117194-302	1013	-	
2	**LAB1D4_A2**	CDMK	WLSD210121-301	1008	00057887J	
3		Belt Pouch Assembly	WLSD210122-301	-	-	
4		CDMK Nomex Belt	WLSD210121-301	-	-	
5	**LAB1D4_C2**	CSA-CP Data Cable	KLSD210045-801	1002	-	Used to download data to MEC.

2

Rick, Bob, Mike, and Box

We have had a little time to think about the SSRMS SPDM blanket plan for tomorrow and would like to give you some more details. To make sure we get all of the ORUs transferred, we need to have Rick leave the SLP at an EVA PET of 2:30. Please have Rick remove SPDM blankets according to the THA Install PET completion times listed below.

THA Install Complete **EVA PET**:

1:50 or less – Remove EP 1 thermal blanket then Arm 2 OTCM sock/install flaps (Page 7-80, steps 2e, b, c, d)
1:51 – 2:00 – Only remove Arm 2 OTCM sock/ install flaps (Page 7-80, steps 2b, c, d)
2:01 – 2:10 – Only remove EP 1 blanket (Page 7-80, steps 2e)
2:11 – 2:30 – Go straight to LWAPA after THA install complete (skip all steps on page 7-80)

SLP BERTH IN ORBITER VIDEO SETUP

H/W SUMMARY

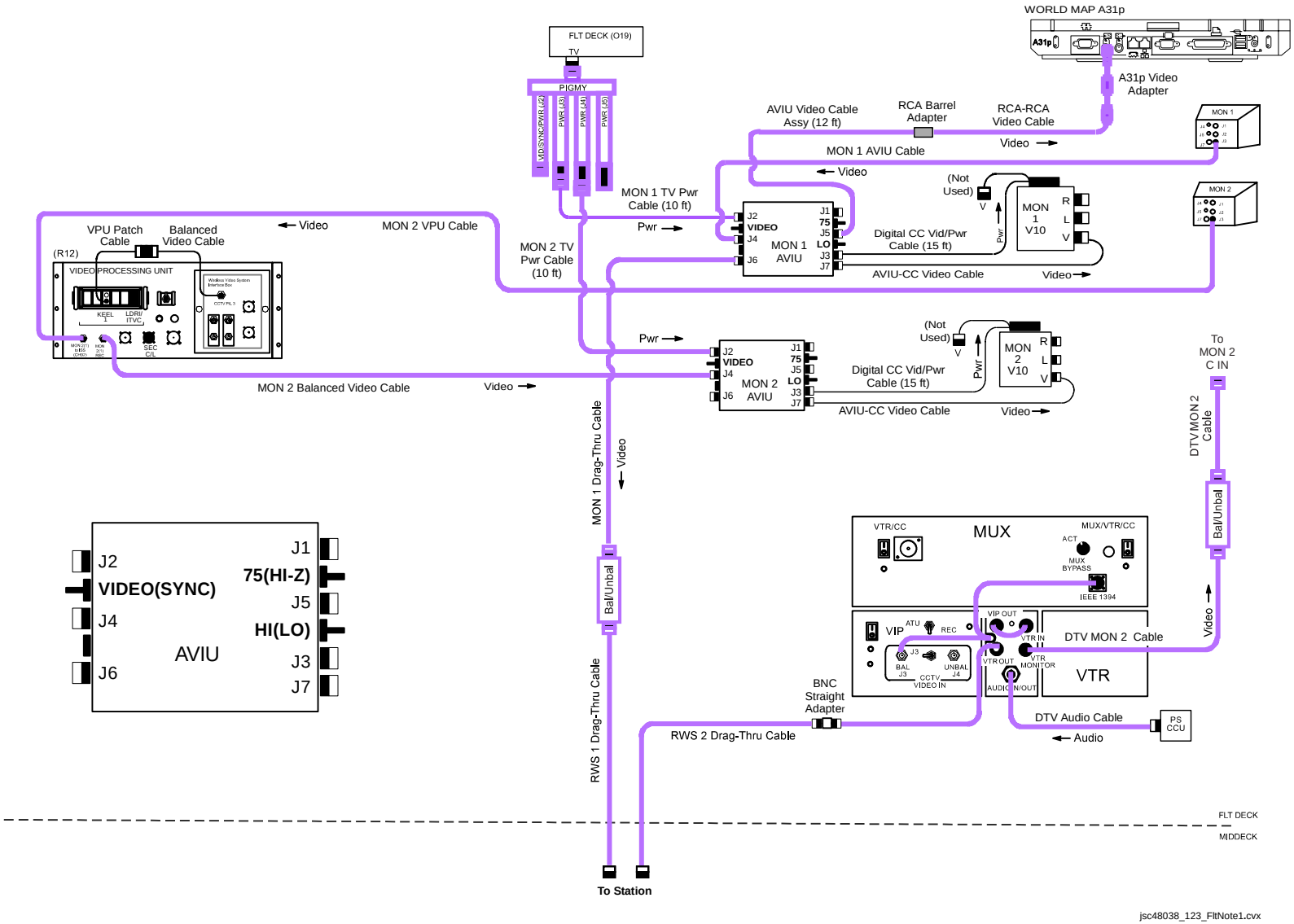

SLP BERTH IN ORBITER VIDEO SETUP (Continued)

SETUP

1. Config H/W per HARDWARE SUMMARY, FS 1-1

R12 (VPU) Green Jumper – LDRI/ITVC
A17 (DTV Bag) Obtain VPU Patch Cable and Balanced Video Cable from Spare Cables Ziplock Bag, connect
R12 (VPU) Connect VPU Patch Cable to bottom KEEL 1 port
(WIB) Connect Balanced Video Cable to CCTV PL/3

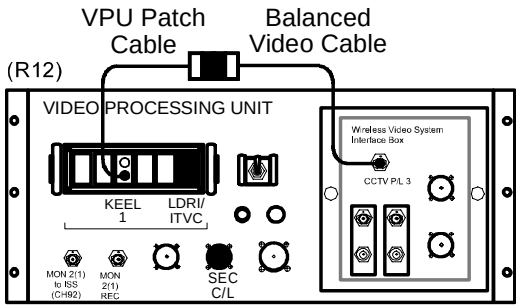

jsc48038_123_FltNote2.cvx

2. Perform ACTIVATION,OPERATION (Cue Card, TV) as reqd

3. Perform Hardware Verification for V10s, FD CC, DTV

O19 √TV PWR – ON

R12 (VPU) √VPU PWR – ON (LED on)

V10 PWR – ON
(MON 1,2) √Tape installed
DISPLAY pb – Toggle to display tape counter

MON 1 √SOURCE – DNLK
MON 2 √SOURCE – C
L10 √Cables connected
(MUX) MUX/VTR/CC PWR – on (LED on)
√MUX BYPASS – ACT
(VIP) PWR – on (LED on)
(VTR) √ON/STANDBY LED – green
√Tape installed

4. Video on WORLD MAP A31p

Double click ‘Shuttle Apps’ > ‘Video Converter’
√‘Video Converter’ window displayed
Sel ‘Local Full Screen’
Press ‘ESC’ or ‘W’ key to minimize display as reqd

SLP BERTH IN ORBITER VIDEO SETUP (Continued)

SETUP (Continued)

5. Keel Camr

L12 (SSP 1) √cb SW PWR 1 CAM PWR (CB2) – cl
(SSP 2) √cb CAM SW PWR (CB2) – cl
√KEEL CAM HTR/ILLUM PWR – ON
ENA – ON

6. Pwr Cycle OBSS ITVC

A7 VID OUT DTV pb – push
IN PL2 pb – push

R12 (OBSS) ITVC ENA – OFF, wait 10 sec, ON

If MAN GAIN pb not illuminated:
ITVC ENA – OFF, wait 10 sec, ON
Repeat until MAN GAIN pb illuminated

NOTE

VID OUT PL2 pb on A7 pnl must be illuminated to control either Keel(OBSS ITVC) Camrs.
Both Camrs use same cmd path; so, when cmd is sent it will be rcvd by both Camrs

A7 LT LEVEL pb – push
DAY pb – push
ALC pb – push
AVG pb – push

SLP BERTH IN ORBITER VIDEO SETUP (Concluded)

SETUP (Concluded)

7. Video Routing

KEEL Camr on MON 1 V10

A7 VID OUT MON 1 pb – push
IN PL3 pb – push

Camr D on MON 2 V10

VID OUT MON 2 pb – push
IN D pb – push

MUX Camr B,C on DNLK (CCTV MON 1)

VID OUT DNLK pb – push
IN MUX 1 pb – push
OUT MUX 1L pb – push
IN B pb – push
OUT MUX 1R pb – push
IN C pb – push

LDRI/ITVC on DTV (CCTV MON 2)

VID OUT DTV pb – push
√IN PL2 pb illuminated
√OBSS ITVC on DTV (CCTV MON 2)

16-1366 (MSG 071) PRLA RFL VISUAL VERIFICATION

NOTE

1. This procedure will be performed for loss of RFL microswitch indications on multiple PRLAs during {1.102 SLP BERTH IN ORBITER} (US_SODF: ROBO FS 1J/A: SLP OPERATIONS).

2. If port fwd/aft PRLAs lose RFL indications, start in step 1

3. If stbd PRLAs, or any three PRLAs, lose RFL indications, start in step 8

1. PHOTO/TV CONFIGURATION

If Camera A is to be used (prime), route to WorldMap A31p and downlink if Ku available:

A7 VID OUT MON 1 pb - press
IN A pb - press
OUT DTV pb - press
IN A pb - press

If Camera B is to be used (backup), route to WorldMap A31p and downlink if Ku available:

A7 VID OUT MON 1 pb - press
IN B pb - press
OUT DTV pb - press
IN B pb - press

Adjust pan and tilt settings until the port PRLAs are centered in the view. Apply recorded focus settings from Step 3 (Camera A) or Step 5 (Camera B) of PRLA RFL OVERLAY DRAFTING (ORB OPS FS, PRLA), and zoom in until the hard stop is reached. View should resemble figure 1 for Camera A or figure 2 for Camera B.

Unstow “Spacelab Pallet Overlay Kit” from FDF locker and mount applicable overlay (“Camera A” or “Camera B”) to A31p monitor with clear tape. Adjust the position of the overlay on the monitor until the alignment cues line up properly with the camera view.

Figure 1. - SLP Port Trunnion View (Camera A)

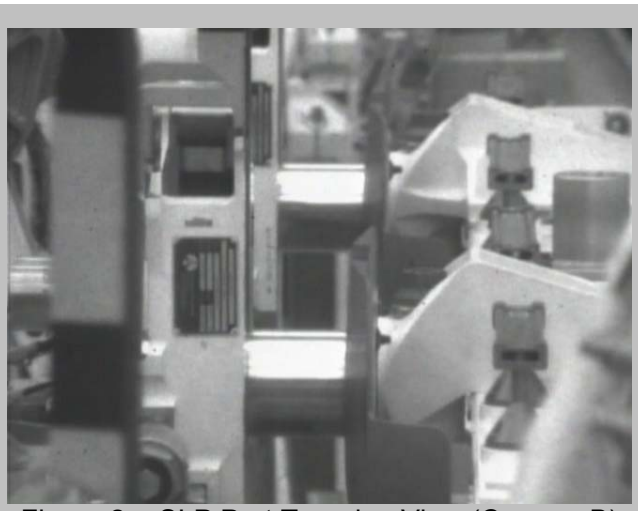

Figure 2. - SLP Port Trunnion View (Camera B)

2. TRUNNION HEIGHT VERIFICATION

Compare port fwd and port aft trunnion position with port fwd and port aft trunnion centerline cues (dashed lines).

If bottom edge of BOTH port fwd and port aft trunnions are clearly below trunnion centerline cues,

Continue with Step 3

If bottom edge of EITHER port fwd or port aft trunnion is NOT clearly below the trunnion centerline cue,

√MCC

If bottom edge of BOTH port fwd and port aft trunnions are NOT clearly below trunnion centerline cues,

Continue with Step 8

If either trunnion position is inconclusive with Camera A view,

Repeat Steps 1-2 with Camera B view and “Camera B” overlay

3. CONFIGURE VIDEO FOR AFT PRLA CLOSURE
   Adjust SSRMS Base Elbow Camera pan/tilt/zoom/focus settings until port aft PRLA is centered in the view (see figure 3).

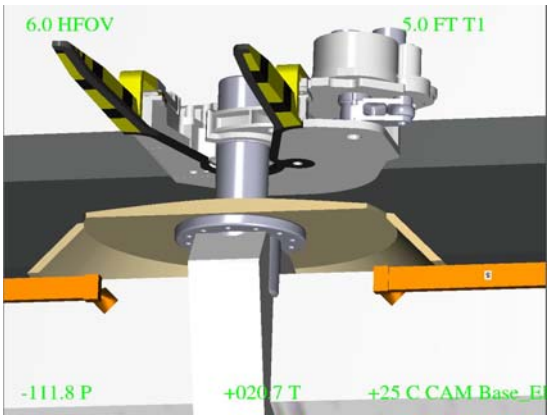

Figure 3. - View of Port Aft PRLA
(SSRMS Base Elbow Camera)

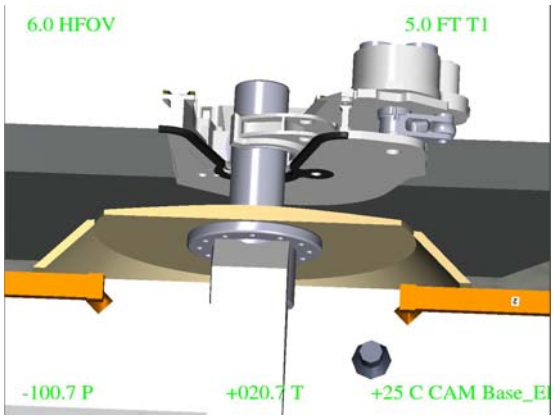

Figure 4. - View of Port Fwd PRLA
(SSRMS Base Elbow Camera)

Route SSRMS Base Elbow Camera to Monitor 2 V10:

R12 (VPU) Green Jumper - ISS
A7 VID OUT MON 2 pb - press
IN PL2 pb - press

4. CLOSE AFT LATCHES

A6U √PL RETEN LAT 1,2,3,4 tb - REL
√RDY 2,4 tb - gray

Note single motor times (> 30 seconds).

```
*****************************************************************************
*  Observe position of PRLA claw during closure, to ensure proper
*    trunnion capture.  Figure 3 shows proper claw position during closure.
*  If it appears that claw will miss or pinch trunnion:
*  |
*  |    PL RETEN LAT 3,4 (two) - OFF
*  |                           - REL (tb - REL, 60 sec max)
*  |                           - OFF
*  |
*  |    Go to step 8
*****************************************************************************
```

PL RETEN LAT 3,4 (two) - LAT (tb - LAT, 60 sec max)
- OFF

Give SSRMS operator GO to Limp SSRMS

PCS MSS: SSRMS: Limp: SSRMS Limp

cmd All Limp (Verify Limp – blue)

MSS: SSRMS: SSRMS

Verify all joints – Limped

SSRMS operator give shuttle crew go to latch fwd PRLAs.

5. CONFIGURE VIDEO FOR FWD PRLA CLOSURE
   Adjust SSRMS Base Elbow Camera pan/tilt/zoom/focus settings until port fwd PRLA is centered in the view (see figure 4).

6. CLOSE FWD LATCHES
   On SSRMS operator GO, perform the following:

   Note single motor times (> 30 seconds).

```
*****************************************************************************
*  Observe position of PRLA claw during closure, to ensure proper
*  trunnion capture.  Figure 4 shows proper claw position during closure.
*  If it appears that claw will miss or pinch trunnion:
*  |
*  |     PL RETEN LAT 1,2 (two) - OFF
*  |                              - REL (tb - REL, 60 sec max)
*  |                              - OFF
*  |
*  |     Go to step 8
*****************************************************************************
```

A6U PL RETEN LAT 1,2 (two) - LAT (tb - LAT, 60 sec max)
- OFF

7. DEACTIVATE LATCHES
   PL RETEN LOGIC PWR SYS 1,2 (two) - OFF
   R13L BAY MECH PWR SYS 1,2 (two) - OFF
   A6U RETEN PL SEL - MON

   Continue in {1.102 SLP BERTH IN ORBITER}, step 14 (US_SODF: ROBO FS 1J/A: SLP OPERATIONS)

FAILED TRUNNION CAPTURE
Perform the following steps if visual verification of trunnion position fails (step 2), PRLAs fail to close successfully (step 4 or step 6), stbd PRLAs lose RFL indications, or if 3 PRLAs lose RFL indications.

8. RELEASE AKA AND DEACTIVATE LATCHES

A6U PL RETEN LAT 5 - REL (tb - REL, 60 sec max)
- OFF

LOGIC PWR SYS 1,2 (two) – OFF

R13L BAY MECH PWR SYS 1,2 (two) – OFF

9. PHOTO/TV RECONFIG

Reconfigure cameras needed for SLP positioning:

R12 (VPU) √Green Jumper - LDRI/ITVC
A7 VID OUT MON 1 pb - press
IN PL3 pb - press
VID OUT MON 2 pb - press
IN D pb - press
VID OUT DTV pb - press
IN PL2 pb - press

10. REALIGN SLP

PCS MSS: SSRMS: Limp: SSRMS Limp

cmd None Limp (Verify Standby – blue)

MSS: SSRMS: SSRMS

Enter Mode – Manual (Verify blue)

MSS: SSRMS: SSRMS Manual: Joint Lock: Joint Lock

cmd Shoulder Roll (Verify SR – Locked)

THC/ RHC Maneuver SLP to V-guide Clearance position.

Locked						
SR	SY	SP	EP	WP	WY	WR
-84.8	-12.2	-9.7	-115.4	+32.8	+4.9	+3.2
X	Y	Z	Pitch	Yaw	Roll	
0	0	-15	0.0	0.0	0.0	
FOR	Loaded – SLP Berth, SSRMS, SR Held					
Disp	Orbiter > SLP Berthed					

Realign SLP for reberth.

Maneuver SLP to Berth -Y bias position.

Locked						
SR	SY	SP	EP	WP	WY	WR
-84.8	-11.8	-9.7	-115.4	+32.9	+4.9	+2.8
X	Y	Z	Pitch	Yaw	Roll	
0	-2	-15	0.0	0.0	0.0	
FOR	Loaded – SLP Berth, SSRMS, SR Held					
Disp	Orbiter > SLP Berthed					

THC Perform “+Z” Manual Maneuver until four RTLs (THC down).

Perform “+Z” Manual Maneuver an additional 7 seconds (THC down).

Verify SSRMS at -Y bias Berthed position (within 5 cm/1 deg).

Locked						
SR	SY	SP	EP	WP	WY	WR
-84.8	-11.6	-10.9	-114.1	+32.8	+4.9	+2.6
X	Y	Z	Pitch	Yaw	Roll	
0	-2	0	0	0	0	
FOR	Loaded – SLP Berth, SSRMS, SR Held					
Disp	Orbiter > SLP Berthed					

Verify Posn Hold – orange

PCS MSS: SSRMS: SSRMS

Enter Mode – Standby (Verify blue)

PCS MSS: SSRMS: Limp: SSRMS Limp

sel SR, SY, WY

cmd Execute

MSS: SSRMS: SSRMS

Verify Limp - blue

Verify SR, SY, and WY – Limped

Give shuttle crew go to latch PRLAs.

Go to {1.102 SLP BERTH IN ORBITER}, step 10 (US_SODF: ROBO FS 1J/A: SLP OPERATIONS).

16-1366 (MSG 071) PRLA RFL VISUAL VERIFICATION

NOTE

1. This procedure will be performed for loss of RFL microswitch indications on multiple PRLAs during {1.102 SLP BERTH IN ORBITER} (US_SODF: ROBO FS 1J/A: SLP OPERATIONS).

2. If port fwd/aft PRLAs lose RFL indications, start in step 1

3. If stbd PRLAs, or any three PRLAs, lose RFL indications, start in step 8

1. PHOTO/TV CONFIGURATION

If Camera A is to be used (prime), route to WorldMap A31p and downlink if Ku available:

A7 VID OUT MON 1 pb - press
IN A pb - press
OUT DTV pb - press
IN A pb - press

If Camera B is to be used (backup), route to WorldMap A31p and downlink if Ku available:

A7 VID OUT MON 1 pb - press
IN B pb - press
OUT DTV pb - press
IN B pb - press

Adjust pan and tilt settings until the port PRLAs are centered in the view. Apply recorded focus settings from Step 3 (Camera A) or Step 5 (Camera B) of PRLA RFL OVERLAY DRAFTING (ORB OPS FS, PRLA), and zoom in until the hard stop is reached. View should resemble figure 1 for Camera A or figure 2 for Camera B.

Unstow “Spacelab Pallet Overlay Kit” from FDF locker and mount applicable overlay (“Camera A” or “Camera B”) to A31p monitor with clear tape. Adjust the position of the overlay on the monitor until the alignment cues line up properly with the camera view.

Figure 1. - SLP Port Trunnion View (Camera A)

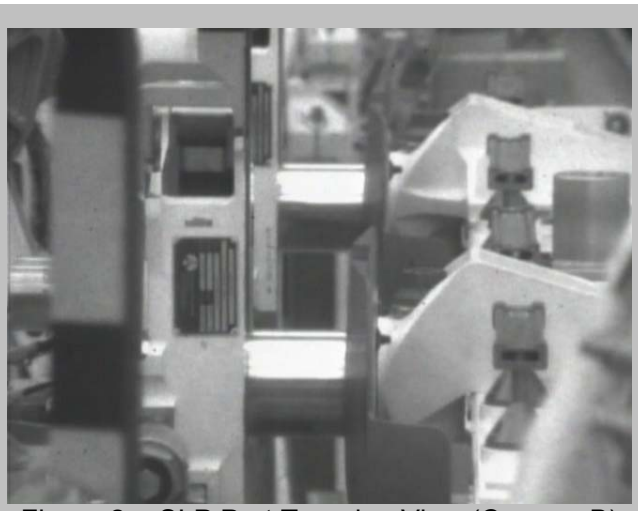

Figure 2. - SLP Port Trunnion View (Camera B)

2. TRUNNION HEIGHT VERIFICATION

Compare port fwd and port aft trunnion position with port fwd and port aft trunnion centerline cues (dashed lines).

If bottom edge of BOTH port fwd and port aft trunnions are clearly below trunnion centerline cues,

Continue with Step 3

If bottom edge of EITHER port fwd or port aft trunnion is NOT clearly below the trunnion centerline cue,

√MCC

If bottom edge of BOTH port fwd and port aft trunnions are NOT clearly below trunnion centerline cues,

Continue with Step 8

If either trunnion position is inconclusive with Camera A view,

Repeat Steps 1-2 with Camera B view and “Camera B” overlay

3. CONFIGURE VIDEO FOR AFT PRLA CLOSURE
   Adjust SSRMS Base Elbow Camera pan/tilt/zoom/focus settings until port aft PRLA is centered in the view (see figure 3).

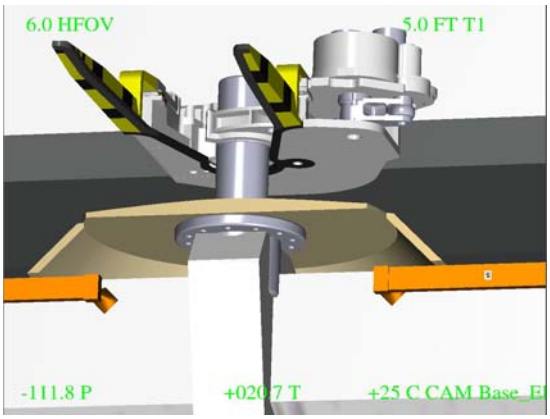

Figure 3. - View of Port Aft PRLA
(SSRMS Base Elbow Camera)

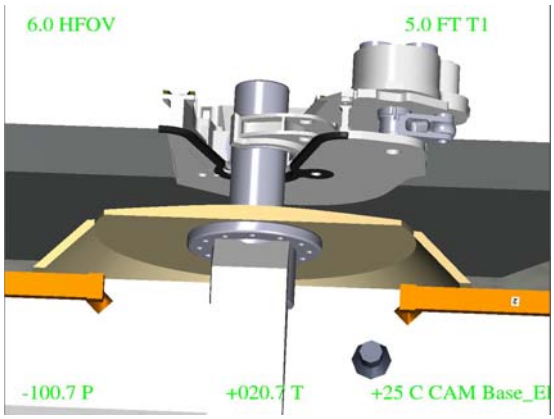

Figure 4. - View of Port Fwd PRLA
(SSRMS Base Elbow Camera)

Route SSRMS Base Elbow Camera to Monitor 2 V10:

R12 (VPU) Green Jumper - ISS
A7 VID OUT MON 2 pb - press
IN PL2 pb - press

4. CLOSE AFT LATCHES

A6U √PL RETEN LAT 1,2,3,4 tb - REL
√RDY 2,4 tb - gray

Note single motor times (> 30 seconds).

```
*****************************************************************************
*  Observe position of PRLA claw during closure, to ensure proper
*    trunnion capture.  Figure 3 shows proper claw position during closure.
*  If it appears that claw will miss or pinch trunnion:
*  |
*  |    PL RETEN LAT 3,4 (two) - OFF
*  |                           - REL (tb - REL, 60 sec max)
*  |                           - OFF
*  |
*  |    Go to step 8
*****************************************************************************
```

PL RETEN LAT 3,4 (two) - LAT (tb - LAT, 60 sec max)
- OFF

Give SSRMS operator GO to Limp SSRMS

PCS MSS: SSRMS: Limp: SSRMS Limp

cmd All Limp (Verify Limp – blue)

MSS: SSRMS: SSRMS

Verify all joints – Limped

SSRMS operator give shuttle crew go to latch fwd PRLAs.

5. CONFIGURE VIDEO FOR FWD PRLA CLOSURE
   Adjust SSRMS Base Elbow Camera pan/tilt/zoom/focus settings until port fwd PRLA is centered in the view (see figure 4).

6. CLOSE FWD LATCHES
   On SSRMS operator GO, perform the following:

   Note single motor times (> 30 seconds).

```
*****************************************************************************
*  Observe position of PRLA claw during closure, to ensure proper
*  trunnion capture.  Figure 4 shows proper claw position during closure.
*  If it appears that claw will miss or pinch trunnion:
*  |
*  |     PL RETEN LAT 1,2 (two) - OFF
*  |                              - REL (tb - REL, 60 sec max)
*  |                              - OFF
*  |
*  |     Go to step 8
*****************************************************************************
```

A6U PL RETEN LAT 1,2 (two) - LAT (tb - LAT, 60 sec max)
- OFF

7. DEACTIVATE LATCHES
   PL RETEN LOGIC PWR SYS 1,2 (two) - OFF
   R13L BAY MECH PWR SYS 1,2 (two) - OFF
   A6U RETEN PL SEL - MON

   Continue in {1.102 SLP BERTH IN ORBITER}, step 14 (US_SODF: ROBO FS 1J/A: SLP OPERATIONS)

FAILED TRUNNION CAPTURE
Perform the following steps if visual verification of trunnion position fails (step 2), PRLAs fail to close successfully (step 4 or step 6), stbd PRLAs lose RFL indications, or if 3 PRLAs lose RFL indications.

8. RELEASE AKA AND DEACTIVATE LATCHES

A6U PL RETEN LAT 5 - REL (tb - REL, 60 sec max)
- OFF

LOGIC PWR SYS 1,2 (two) – OFF

R13L BAY MECH PWR SYS 1,2 (two) – OFF

9. PHOTO/TV RECONFIG

Reconfigure cameras needed for SLP positioning:

R12 (VPU) √Green Jumper - LDRI/ITVC
A7 VID OUT MON 1 pb - press
IN PL3 pb - press
VID OUT MON 2 pb - press
IN D pb - press
VID OUT DTV pb - press
IN PL2 pb - press

10. REALIGN SLP

PCS MSS: SSRMS: Limp: SSRMS Limp

cmd None Limp (Verify Standby – blue)

MSS: SSRMS: SSRMS

Enter Mode – Manual (Verify blue)

MSS: SSRMS: SSRMS Manual: Joint Lock: Joint Lock

cmd Shoulder Roll (Verify SR – Locked)

THC/ RHC Maneuver SLP to V-guide Clearance position.

Locked						
SR	SY	SP	EP	WP	WY	WR
-84.8	-12.2	-9.7	-115.4	+32.8	+4.9	+3.2
X	Y	Z	Pitch	Yaw	Roll	
0	0	-15	0.0	0.0	0.0	
FOR	Loaded – SLP Berth, SSRMS, SR Held					
Disp	Orbiter > SLP Berthed					

Realign SLP for reberth.

Maneuver SLP to Berth -Y bias position.

Locked						
SR	SY	SP	EP	WP	WY	WR
-84.8	-11.8	-9.7	-115.4	+32.9	+4.9	+2.8
X	Y	Z	Pitch	Yaw	Roll	
0	-2	-15	0.0	0.0	0.0	
FOR	Loaded – SLP Berth, SSRMS, SR Held					
Disp	Orbiter > SLP Berthed					

THC Perform “+Z” Manual Maneuver until four RTLs (THC down).

Perform “+Z” Manual Maneuver an additional 7 seconds (THC down).

Verify SSRMS at -Y bias Berthed position (within 5 cm/1 deg).

Locked						
SR	SY	SP	EP	WP	WY	WR
-84.8	-11.6	-10.9	-114.1	+32.8	+4.9	+2.6
X	Y	Z	Pitch	Yaw	Roll	
0	-2	0	0	0	0	
FOR	Loaded – SLP Berth, SSRMS, SR Held					
Disp	Orbiter > SLP Berthed					

Verify Posn Hold – orange

PCS MSS: SSRMS: SSRMS

Enter Mode – Standby (Verify blue)

PCS MSS: SSRMS: Limp: SSRMS Limp

sel SR, SY, WY

cmd Execute

MSS: SSRMS: SSRMS

Verify Limp - blue

Verify SR, SY, and WY – Limped

Give shuttle crew go to latch PRLAs.

Go to {1.102 SLP BERTH IN ORBITER}, step 10 (US_SODF: ROBO FS 1J/A: SLP OPERATIONS).

1.401 RLT-BU SCREEN SAVER DISABLE

(ROBOTICS/1JA - ALL/FIN/HC) Page 1 of 7 pages

OBJECTIVE:

This procedure disables the screen saver function for the RLT application software and the RLT-BU application software that resides on the RLT-BU laptop.

LOCATION:

Node 2

DURATION:

60 minutes with one crew member.

- 5 minutes for preparation.
- 10 minutes for RLT-BU Laptop setup. (Step 1)
- 30 minutes for disabling the screen saver function for RLT(RLT-BU) Application Software. (Step 2)
- 10 minutes for RLT-BU disassembly. (Step 3)
- 5 minutes for closeout.

TOOLS:

ISS IVA Toolbox:

Drawer 5:

Static Wrist Tether

1. RLT-BU LAPTOP SETUP

1.1. √**MCC-H** to determine assigned UOP and connector (J3 or J4).

1.2. Checking No Power Applied To J3, J4 Of UOP

UOP in Node 2 √POWER OUT – RESET (illuminated)
√FAULT/TEST – OK (not illuminated)
√TEST SELECT (not illuminated)

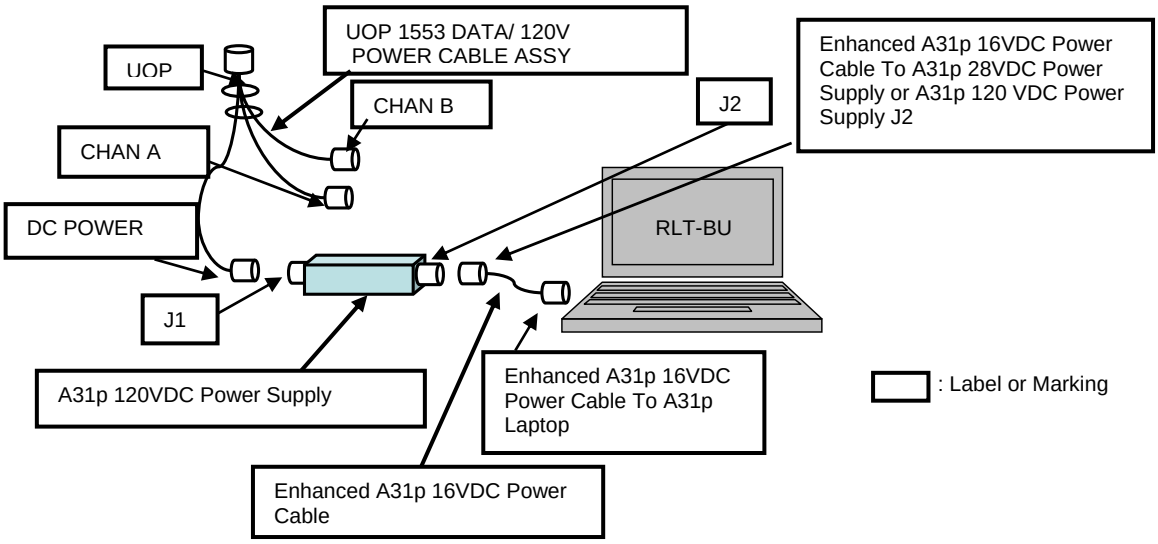

Figure 1. - RLT-BU Laptop Cables Configuration

1.3. Don Static Wrist Tether.
Secure to an unpainted, unanodized metal structure.

1.4. Connecting RLT-BU And A31p 120VDC Power Supply
Protective Cap ←|→ J2 on A31p 120VDC Power Supply
Remove Protective Caps from Enhanced A31p 16VDC Power Cable.

Enhanced A31p 16VDC Power Cable To A31p Laptop →|← RLT-BU
Enhanced A31p 16VDC Power Cable To A31p 28VDC Power Supply or A31p 120 VDC Power Supply J2 →|← J2 on A31p 120VDC Power Supply

1.5. Connecting UOP 1553 DATA/ 120V POWER CABLE ASSY And A31p 120VDC Power Supply

Protective Cap ←|→ J1 on A31p 120VDC Power Supply
DC POWER on UOP 1553 DATA/ 120V POWER CABLE ASSY →|← J1 on A31p 120VDC Power Supply
√Reset on UOP – illuminated

1.6. Connecting Cable Assembly To UOP

Protective cap ←|→ J3(J4) on UOP
Protective cap ←|→ UOP on UOP 1553 DATA/ 120V POWER CABLE ASSY
UOP on UOP 1553 DATA/ 120V POWER CABLE ASSY →|← J3(J4) on UOP

1.7. Doff Static Wrist Tether.

1.8. Activating UOP And Power Supply

√POWER OUT – RESET (illuminated)
POWER OUT → Press (switch depressed)
√POWER OUT – ENABLE (illuminated)
√FAULT/TEST – OK (illuminated)
√TEST SELECT – not illuminated

A31P 120VDC
Power Supply sw INPUT POWER → ON (Verify OUTPUT POWER – green)

2. DISABLING SCREEN SAVER FOR RLT(RLT-BU) APP SOFTWARE

RLT-BU For each RLT and RLT-BU application Software, go to step 2.1 to 2.5. (Refer to Figure 1.)

2.1. Activating RLT-BU Laptop And RLT(RLT-BU) Application Software

pb RLT-BU ThinkPad pwr → Press

GRUB
sel RLT(RLT-BU)
Press [Enter]

2.2. Verifying Window Manager Activated

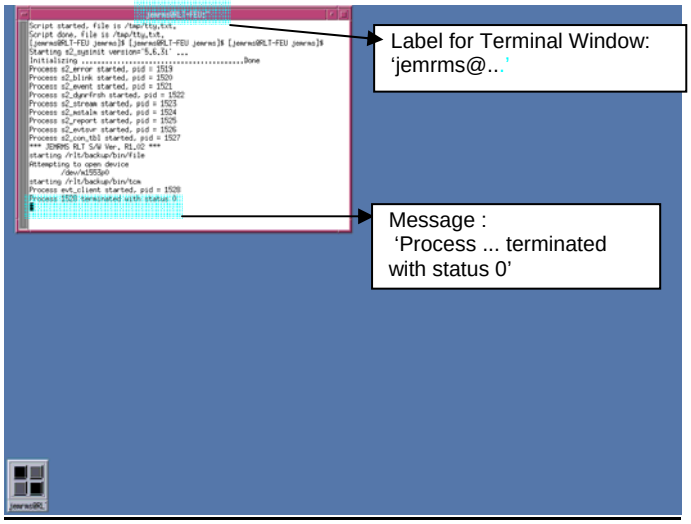

Figure 2 - Window Manager Activated

NOTE
'**Process … terminated with status 0**' will be displayed in the terminal window, because Bus Controller is not connected to RLT-BU Laptop.

Verify that the Terminal Window jemrms@... is displayed. (Refer to Figure 2)

2.3. Opening Gedit Window

Figure3 - Root Menu

Right Click on desktop to open the Root Menu (Refer to Figure 3)

Root Menu
pick New Window

Figure 4 - Command Entry To Launch gedit

jemrms@... :/jemrms
Verify Command Prompt is '[jemrms@... jemrms]$'
input Command Prompt – su
Press [Enter]
Verify Command Prompt is '[root@... jemrms]#'
input Command Prompt – gedit /jemrms/.bash_profile
Press [Enter]
(Refer to Figure 4)

2.4. Setting Parameters To Disable Screen Saver

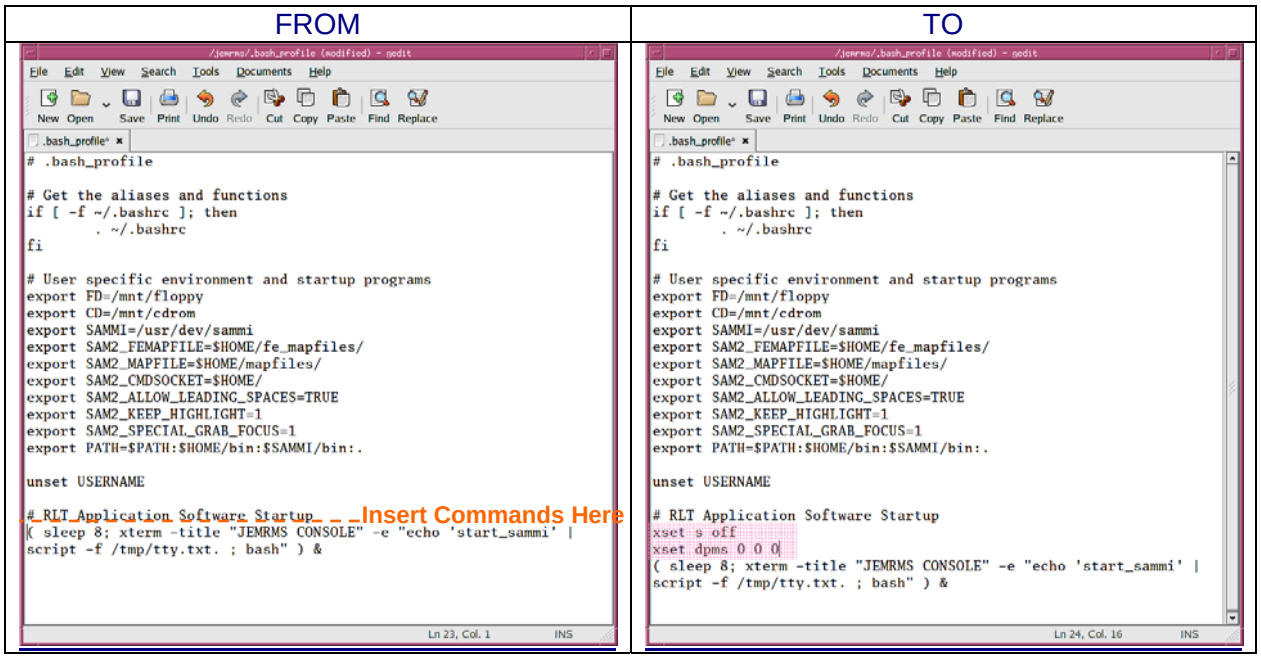

Figure 5 - From-To For Parameter Settings

/jemrms/.bash_profile - gedit

Insert the following input commands under the statement '#RLT Application Software Startup' or '#RLT-BU Application Software Startup' as below. (Refer to Figure 5)
input – xset s off
Press [Enter]
input – xset dpms 0 0 0
Press [Enter]
cmd Save
pick File – Quit

2.5. Deactivating RLT-BU Laptop

Right Click on desktop to open the Root Menu (Refer to Figure 3)

Root Menu

pick Quit

Verify message '**QUIT Mwm?**'
cmd OK
Verify Login dialog is displayed.
cmd Shutdown
Verify message '**Are you sure you want to shut down the machine?**'
cmd Yes

3. RLT-BU LAPTOP DISASSEMBLY

3.1. Deactivating UOP And Power Supply

A31P 120VDC Power Supply — sw INPUT POWER → OFF (Verify OUTPUT POWER – Not illuminated)

UOP in Node 2 — POWER OUT → Press (Press pushbutton to release)
√POWER OUT – RESET (illuminated)

3.2. Don Static Wrist Tether.
Secure to an unpainted, unanodized metal structure.

3.3. Disconnecting Cable Assembly From UOP
UOP on UOP 1553 DATA/ 120V POWER CABLE ASSY ←|→ J3(J4) on UOP
Protective cap →|← J3(J4) on UOP
Protective cap →|← UOP on UOP 1553 DATA/ 120V POWER CABLE ASSY

3.4. Disconnecting UOP 1553 DATA/ 120V POWER CABLE ASSY From A31p 120VDC Power Supply
DC POWER on UOP 1553 DATA/ 120V POWER CABLE ASSY ←|→ J1 on A31p 120VDC Power Supply
Protective Cap →|← J1 on A31p 120VDC Power Supply

3.5. Disconnecting RLT-BU From A31p 120VDC Power Supply
Enhanced A31p 16VDC Power Cable To A31p 28VDC Power Supply or A31p 120 VDC Power Supply J2 ←|→ J2 on A31p 120VDC Power Supply
Enhanced A31p 16VDC Power Cable To A31p Laptop ←|→ RLT-BU
Attach Protective Caps to Enhanced A31p 16VDC Power Cable.
Protective Cap →|← J2 on A31p 120VDC Power Supply

3.6. Doff Static Wrist Tether.

3.7. Notifying **SSIPC** Of Task Completion

Notify **SSIPC** RLT-BU SCREEN SAVER DISABLE complete.
Store equipment.

1J Stow Prep Contents Labels

Overview: Contents Labels for 1J Activation Kit and JEMRMS Console Kit are missing during 1J Stow Prep on FD 7. We have provided contents labels for 1J Activation Kit and JEMRMS Console Kit by this message. We wrote down both the OP NOM and actual label name on the content label for the JEMRMS Console Kit using parenthesis.

Duration: 10 min

Procedure:

1) Print the labels.
2) Cut out the labels.
3) Insert Contents Label “1 J Activation Kit” for Equipment Assembly Bag into bag pocket.
4) Insert Contents Label “JEMRMS Console Kit” for TRAY-EPS1-4 into pocket.

1J Activation Kit	JPM1D2-B2 TRAY-EPS1-4 **JEMRMS Console Kit**
1/2” QD Plug - 1 **1/2” QD Cap - 1** **PPRV Cap - 1** **Cabin Duct Maintenance Cap - 2** **Adjustable Length Tether - 2** **MHI K-BAR ECLSS/TCS2 Left - 1** **MHI K-BAR ECLSS/TCS2 Right - 1** **IHI/MHI Pivot Fitting Bottom, Left - 1** **IHI/MHI Pivot Fitting Bottom, Right - 1** **D-Cell Battery - 8**	**RLT Table - 1** **A31p Laptop (RLT-BU) - 1** **1553 PC Card w/Adapter Cable 22in (1553 PC Card Interface Cable) - 1** **A31p 120VDC Power Supply - 1** **Enhanced A31p 16V DC Power Cable - 1** **US DC Power and 1553 Cable (UOP1553 Data/120V Power Cable Assy) - 1** **BDS Cable 10 - 1** **JEMRMS Pwr/Data Cable - 1**