# STS-123 / 1J / A

## *FD 07 Execute Package*

| MSG | Page(s) | Title |
|---|---|---|
| 052 | 1 - 12 | FD07 Flight Plan Revision **(pdf)** |
| 053 | 13 - 14 | FD07 Mission Summary **(pdf)** |
| 054 | --- | FD06 MMT Summary **(pdf - Electronic Only)** |
| 055 | 15 - 17 | FD07 Transfer Message **(pdf)** |
| 056 | --- | FD07 PAO Event Summary **(pdf - Electronic Only)** |
| 057 | 18 - 21 | JLP1PA1 JEM Bag 11 Retrieval **(pdf)** |
| 058 | 22 - 23 | FD07 Water Notes **(pdf)** |
| 059A | 24 - 26 | FD07 EVA Deltas **(pdf)** |
| 060 | 27 - 39 | Stowage Locations for FD07 Plan (GMT 076/077) **(pdf)** |
| 061 | 40 - 46 | Middeck Return Bag Configurations **(pdf)** |

***Approved by FAO:*** *Laura Hearon*

*Last Updated: Mar 16 2008 5:10PM GMT*
***JEDI*** *(**J**oint **E**xecute package **D**evelopment and **I**ntegration), v2.04.0003*

MSG INDEX


| MSG NO. | TITLE |
|---|---|
| 52 | FD07 Flight Plan Revision |
| 53 | FD07 Mission Summary |
| 54 | FD06 MMT Summary |
| 55 | FD07 Transfer Message |
| 56 | FD07 PAO Event Summary (St. Louis, Cleveland, Boston) |
| 57 | JLPIPA1 JEM Bag 11 Retrieval |
| 58 | FD07 Water Notes |
| 59 | FD07 EVA Deltas |
| 60 | Stowage Locations for FD07 Plan |
| 61 | Middeck Return Bag Configurations |


1. Exercise Constraints

Part A (Entire Docked Timeframe) was built per Flight Rule 1JA_C2-79. Part B (Flight Day 07 – SPDM Brake Run-In) was built per Flight Rule 1JA_C2-76.

A. The generic exercise constraints that apply to the entire docked timeframe are listed in the table below.

Exercise Constraints Table A: Entire Docked Timeframe

| Exercise Constraints |
|---|
| RED limited to 3 sec (squats and heel raises) and 2 sec (situps) between repetitions |
| HC-1 limited to 3 sec (torso bending and rowing) and 2 sec (hammer throw and forearm bending) between repetitions |
| Use of theraband or any other exercise band while exercising on Shuttle Ergometer is prohibited, except during EVA prebreathe, and always on CEVIS |
| Use of ISS hard-mounted exercise equipment during 1-jet PRCS attitude control and reboost is prohibited |

B. There are no exercise constraints for any of the activities on FD07.

2. JLP PCBM Cover Relocate Steps (MS3 05/22:55)

JLP Contamination cover and PCBM Thermal cover relocation and stow to JLP

1. Relocate contamination covers and PCBM Thermal Cover (MLI) to JLP.
2. Remove Beta Cloth Closeout (JLP1F3-01), Snap fasteners (two), Velcro.
3. Stow contamination covers and PCBM Thermal Cover(MLI)to JLP1F3-01, Straps.
4. Attach Beta Cloth Closeout (JLP1F3-01), Snap fasteners (two), Velcro.
5. Notify SSIPC of task completion.

3. SSRMS Notes

With the SSRMS grappled to the SPDM PDGF, the Tip LEE camera will no longer provide useful camera views for the planned SPDM arm operations per procedure 1.501 SPDM BRAKE RUN-IN and procedure 1.505 SPDM CONFIG FOR EVA3. We suggest using either the MBS Mast camera, Base Elbow camera and/or SRMS Elbow camera to replace the Tip LEE view.

4. SRMS Notes

Due to the sequence of events of the SPDM ops the SSRMS will not be at the SPDM Stow posn as stated in step 1 of the SLP Viewing with OBSS procedure (FS 4-6), or at the SPDM Viewing posn as stated in step 1 of the Mnvr from SLP Viewing with OBSS to -Y Tracker Clear procedure (FS 4-8). These tables can be ignored; the ground has verified there will be no interference with the SPDM during these maneuvers.

5. PGSC Setup Question

Bob: Where are the PSGCs currently set up? This may help us determine why we are unable to connect to all of the Shuttle PGSCs using ISS KU.

6. Words From JAXA

Takao, thank you for your great work on FD6 as well. For JLP-RACK-RECONFIG, thank you for your report on the K-BAR and Pivot B/C. And if you could report B/C of Pivot Fitting for DMS1, EPS1 and WS racks as well at your convenience, we would appreciate it. Since you were so ahead on FD5, the stowage note was not ready and we could not ask you promptly at that time. Sorry for the inconvenience and thanks for your help in advance.

7. State of the Station

Note on the CDRA failure last night: ECLSS believes this was a transient failure which caused the CDRA fan to shut down. This has been seen before, and troubleshooting steps were able to recover CDRA shortly after the failure. We don't expect this to have any impact on CO2 control during the flight.

8. REPLACE PAGES 2-22, 2-24, 3-68 THROUGH 3-75.

GMT 03/16/08 (076) 12 19 20 21 22 23 03/17 01 02 03 04 05 06 006/00

MET β=31 Day 005 13 14 15 16 17 18 19 20 21 22 23

| | | |
|---|---|---|
| STS-123 | **FD07** CDR GORIE | SLEEP; POST SLEEP; MCIU*; IOFF UM; XFER OPS; N2-I; RMNSVR*; EXERCISE; MEAL; N2-T; H/O; DUMP PWR; SPLY; SINIT; STERM; MNEVR; H/O; N2 XFER TERM |
| STS-123 | PLT JOHNSON | SLEEP; SLEEP; POST SLEEP; COND; SWAP; ICNT^; IMU; RMNSVR*; XFER OPS; EQUIP GATHR; MEAL; WASTE; WATER; CONDT; EXERCISE; COND; TERM |
| STS-123 | D2/EV2 MS1 BEHNKEN | SLEEP; SLEEP; POST SLEEP; BRAKE RUN IN ARM 1; BRAKE RUN IN ARM 2; EXERCISE; EMU SWAP; MEAL; PAO; EVENT; BMAETTS TOT/XL; EVA3 TOOL CONFG; SPDM EVA3 ARM STOW; E_LK PREP; PRE SLEEP |
| STS-123 | MS2 FOREMAN | SLEEP; SLEEP; ASPERN; POST SLEEP; JUMPR & CVR RTRVL; MEAL; PAO; EVENT; 1J STOW PREP 1; EXERCISE; XFER OPS; XFER; BREF |
| STS-123 | MS3 DOI | SLEEP; CDM-D; POST SLEEP; XFER; UPDT; EXERCISE; FAN1; JUMPR & CVR RTRVL; CDM BATT CH OUT; MEAL; 1J STOW PREP 1; 1J STOW PREP 2; BAG 9 RTRVL; 1J STOW PREP 3; JLP*; XFER OPS; FANO |
| STS-123 | EV1 MS4 LINNEHAN | SLEEP; ASPRN; POST SLEEP; EXERCISE; CLPA; PREAP; BSA-T; BSA INIT; MTX-T; EMU SWAP; MEAL; PAO; EVENT; BMAETTS TOT/XL; EVA3 TOOL CONFG; P&I; E_LK PREP; PRE SLEEP |
| DN | FE-2 EYHARTS | SLEEP (8.5); POST SLEEP; PREP WORK; DPC; PW; TVIS; NOD2 ZENITH HATCH; JLP HATCH; ♣; NOD2; ZNTH^; 1JA UNSTW; S/U; MEAL; PAO; EVENT; 1JA UNSTW; BAG 9 RTRVL; 1JA UNSTW; DCS; RED |
| EXP | ISS CDR WHITSON | SLEEP (8.5); POST SLEEP; PREP WORK; DPC; PW; RED; EXERCISE CEVIS; 1JA; UNSTW; ER2; PMC; MEAL; PAO; EVENT; ER2; DCS CNFG; ⊕; MSG-A; INSPACE2-H/W-STOW; MSG VIDEO STOW; MSG-D; ♦ |
| EXP | FE-1 MALENCHENKO | SLEEP (8.5); POST SLEEP; PREP WORK; DPC; МБИ-21-FE1-EXE; VELO+RED; MEAL; PAO; EVENT; CB-A-MNT; TVIS; СОЖ; ИП-1; MNT |
| UP | D1 FE-2 EXP16 REISMAN | SLEEP (8.5); POST SLEEP; PREP WORK; DPC; PW; BRAKE RUN IN ARM 1; BRAKE RUN IN ARM 2; EXER; H/O; ADAPT; MEAL; PAO; EVENT; SPDM EVA3 ARM STOW; ADAPT; N2 XFER TERM |

STS: DAY/NIGHT; ORBIT 88 89 90 91 92 93 94 95 96

TDRS W -171 E -46 Z -275

ORB ATT: BIAS -XLV -ZVV; BIAS -XLV -ZVV (h2o)

NOTES: *FILTER CK; ^R OMS to RCS; *SLP VIEW; ♣A/L-IV HATCH-DECAL; ^HATCH CVR INSTL; ⊕EXPRS2 BAT-EXEC; ♦MSG XFER; *PCBM COVER RLCT

GMT 03/17/08 (077) 07 08 09 10 11 12 13 14 15 16 17 18

MET β=33 Day 006 006/00 01 02 03 04 05 06 07 08 09 10 11 12

| | | | | | | | | | | | | | | | | | | | | | | | | |
|---|---|---|---|---|---|---|---|---|---|---|---|---|---|---|---|---|---|---|---|---|---|---|---|---|
| STS-123 | **FD07** CDR GORIE | ♣ | RMS* | EVA 3 PROC RVW | PRE SLEEP | PMC OCA | PRE SLEEP | **ISS EXTERNAL SURVEY** SLEEP | | | | | | | | | | | | | | | | |
| | PLT JOHNSON | ILLUM | ON RMS* | EVA 3 PROC RVW | PRE SLEEP* | | | SLEEP | | | | | | | | | | | | | | | | |
| | EV2 MS1 BEHNKEN | PRE SLEEP | | EVA 3 PROC RVW | PRE SLEEP | MASK PB/TOOL CONFIG | 10.2 DPRS | PRE SLEEP | SLEEP | | | | | | | | | | | | | | | |
| | MS2 FOREMAN | PRE SLEEP | | EVA 3 PROC RVW | PRE SLEEP | | | | SLEEP | | | | | | | | | | | | | | | |
| | MS3 DOI | PRE SLEEP | | EVA 3 PROC RVW | PRE SLEEP | | | | SLEEP | | | | | | | | | | | | | | | |
| | EV1 MS4 LINNEHAN | PRE SLEEP | | EVA 3 PROC RVW | PRE SLEEP | MASK PB/TOOL CONFIG | 10.2 DPRS | PRE SLEEP | SLEEP | | | | | | | | | | | | | | | |
| DN | FE-2 EYHARTS | RED | PS | EVA 3 PROC RVW | PMC | PRE SLEEP-ISS | | | | SLEEP (8.5) | | | | | | | | | | | | | | |
| EXP | ISS CDR WHITSON | ⊕ | DCS | EXER | EVA 3 PROC RVW | PRE SLEEP-ISS | | | | SLEEP (8.5) | | | | | | | | | | | | | | |
| | FE-1 MALENCHENKO | | | | EVA 3 PROC RVW | PRE SLEEP-ISS | | | | SLEEP (8.5) | | | | | | | | | | | | | | |
| UP | FE-2 EXP16 REISMAN | ♣ | | | EVA 3 PROC RVW | PRE SLEEP-ISS | PMC | PRE SLEEP-ISS | | SLEEP (8.5) | | | | | | | | | | | | | | |

STS

DAY/NIGHT

ORBIT 96 97 98 99 100 101 102 103 104

TDRS W -171 E -46 Z -275

ORB ATT BIAS -XLV -ZVV

NOTES

♣N2 XFER TERM *HUM SEP CHECK
⊕MSG XFER PREP1
*-Y STR TRKR CLR MNVR

# STS-123 (FD07 )

GMT Date 03/16 (076) | W | TDRSE | Z | DORB | ORB | MET Day 005 | STS ATI

CDR GORIE | PLT JOHNSON | MS3 DOI | MCC | NOTES

12:00 — 13:00 — 14:00 — 15:00 — 16:00

19:00 — 20:00 — 21:00 — 22:00

DORB 15 16 1 2 — ORB 88 89 90

BIAS -XLV -ZVV

SLEEP (CDR GORIE)

SLEEP (PLT JOHNSON)

SLEEP (MS3 DOI)

FLIGHT SLEEP LOG (ORB OPS, SDBI) CDM DEACT (ORB OPS, CDM DTO)

**FD07 EZ ACTIVITES**
Check TEPC Status
OCAC Filter Inspect
Hard Reboot PGSCs (Except WLES & RPOP2)

POST-SLEEP ACTIVITY (ORB OPS, CREW SYS) (CDR GORIE)

POST-SLEEP ACTIVITY (ORB OPS, CREW SYS) (PLT JOHNSON)

POST-SLEEP ACTIVITY (ORB OPS, CREW SYS) (MS3 DOI)

TRANSFER UPDATE
Ref. Transfer List & MSG 055

EXERCISE

# STS-123 (FD07 )

GMT Date 03/16 (076) | W | TDRSE | Z | DORB | ORB | MET Day 005 | STS ATI

MS1 BEHNKEN | MS2 FOREMAN | MS4 LINNEHAN | NOTES

DORB: 15, 16, 1, 2 — ORB: 88, 89, 90

BIAS -XLV -ZVV

12:00 — 13:00 — 14:00 — 15:00 — 16:00 — 19:00 — 20:00 — 21:00 — 22:00

SLEEP (MS1)

SLEEP (MS2)

SLEEP (MS4)

FLIGHT SLEEP LOG (ORB OPS, SDBI)

FLIGHT SLEEP LOG (ORB OPS, SDBI)
EVA CREW: TAKE 1 ASPIRIN (325mg)

EVA CREW: TAKE 1 ASPIRIN (325mg)

POST-SLEEP ACTIVITY (ORB OPS, CREW SYS)

POST-SLEEP ACTIVITY (ORB OPS, CREW SYS)

POST-SLEEP ACTIVITY (ORB OPS, CREW SYS)

ROBO: 1.501 SPDM BRAKE RUN-IN
Steps 1-8 (ARM 1)

# STS-123 (FD07 )

GMT Date 03/16 (076) | W E | T D R S E Z | D O R B 2 3 4 | O R B 91 92 93 | MET Day 005 | STS ATI BIAS -XLV -ZVV

| MET | CDR GORIE | PLT JOHNSON | MS3 DOI | MCC | NOTES |
|---|---|---|---|---|---|
| 16:00 | L17 Check MCIU filter screen<br>TV (ILLUMINATOR OPS) (P/TV, CUE CARDS) ILLUMINATORS OFF - ALL<br>TRANSFER OPS Ref. Transfer List | SHUTTLE CONDENSATE COLLECTION (ORB OPS, ECLS) CHANGEOUT Ref. MSG 058<br>I'CNCT: R OMS TO RCS (OPCL, RCS)<br>IMU STAR OF OPPTY ALIGN (ORB OPS) | EXERCISE | | |
| 17:00 | N2 RPRS USING PL N2 VLVS Init (ORB OPS,ECLS) Steps 1-7. MCC will TMBU SM FDA<br>SLP VIEWING WITH OBSS (PDRS, VIEW SUPT) | SLP VIEWING WITH OBSS (PDRS, VIEW SUPT)<br>TRANSFER OPS Ref. Transfer List | ASSY OPS: 1.106 JLP VENT FAN ACT/DEACT-MKAM Step 1 (Act)<br>ASSY OPS: 2.110 JUMPER & COVER RETRIEVAL V-Band Clamp threads on JLP Standoff Duct can be a sharp edge hazard. Take care when accessing the Clamps. Ref. MSG 060 for Stow Locations | | |
| 18:00 | EXERCISE | GATHER DUMP EQUIPMENT Ref. MSG 058 | CDM SETUP & BATT CH OUT (ORB OPS, CDM DTO) Attach CDM in Location 3 | | |
| 19:00 | MEAL | MEAL | MEAL | | |
| 20:00 | N2 RPRS USING PL N2 VLVS Term (ORB OPS, ECLS) Steps 8-13 MCC will TMBU SM FDA | | | | |

# STS-123 (FD07 )

GMT Date 03/16 (076) | W | TDRS E | Z | DORB 2 3 4 | ORB 91 92 93 | MET Day 005 | STS ATI

| MET | MS1 BEHNKEN | MS2 FOREMAN | MS4 LINNEHAN | NOTES |
|---|---|---|---|---|
| 16:00 | ROBO: 1.501 SPDM BRAKE RUN-IN Steps 1-8 (ARM 1) | POST-SLEEP ACTIVITY (ORB OPS, CREW SYS) | POST-SLEEP ACTIVITY (ORB OPS, CREW SYS) | |
| | ROBO: 1.501 SPDM BRAKE RUN-IN Steps 9-16 (ARM 2) | | | |
| 23:00 | | | EXERCISE | |
| 17:00 | | ASSY OPS: 2.110 JUMPER & COVER RETRIEVAL V-Band Clamp threads on JLP Standoff Duct can be a sharp edge hazard. Take care when accessing the Clamps. Ref. MSG 060 for Stow Locations | CLPA PREPARATION (EVA, TBD) | |
| 00:00 | EXERCISE | | EVA SYS: 1.605 BSA BATTERY RECHARGE (Term) | |
| | | | EVA SYS: 1.605 BSA BATTERY RECHARGE (Init) REF: STS-123 BATTERY RECHARGE PLAN CC & STS-123 CONSUMABLES TRACKING CC (EVA) | |
| 18:00 | | | EVA SYS: 1.510 METOX REGENERATION (Term) | |
| | EMU SWAP FOR EVA 3 (EVA, AIRLOCK CONFIG) | | EMU SWAP FOR EVA 3 (EVA, AIRLOCK CONFIG) | |
| 01:00 | | | | |
| 19:00 | MEAL | MEAL | MEAL | |
| 02:00 | | | | |
| | PUBLIC AFFAIRS EVENT ISS KU TDRW: 19:45-20:08 Ref. MSG 056 | PUBLIC AFFAIRS EVENT ISS KU TDRW: 19:45-20:08 Ref. MSG 056 | PUBLIC AFFAIRS EVENT ISS KU TDRW: 19:45-20:08 Ref. MSG 056 | |
| 20:00 | | | | |

BIAS-XLV-ZVV

# STS-123 (FD07 )

GMT Date 03/17 (077) | W E Z | DORB 4 5 6 7 | ORB 93 94 95 96 | MET Day 005 | STS ATI

20:00 — 21:00 — 22:00 — 23:00 — 00:00

03:00 — 04:00 — 05:00 — 06:00

BIAS -XLV -ZVV (h2o)

## CDR GORIE

JOINT OPS: 3.110 H/O ATT CONTROL
CMG TA to ORB

MNVR(TRK)BIAS -XLV -ZVV (DUMP)
TG=2 BV=5 P=162 Y=355 OM=193
A/AUTO/VERN Init TRK

PWR DUMP - SUPPLY LINE
(ORB OPS, ECLS)
Ref. MSG 058

SUPPLY/WASTE WATER DUMP
(ORB OPS, ECLS)Initiate Supply Dump
Ref. MSG 058

SUPPLY/WASTE WATER DUMP
(ORB OPS, ECLS)Terminate Supply Dump
Ref. MSG 058

MNVR (TRK)BIAS -XLV -ZVV (TEA)
TG=2 BV=5 P=162 Y=355 OM=177
A/AUTO/VERN Init TRK

JOINT OPS: 3.111 H/O ATT CONTROL
ORB to CMG TA

JOINT OPS: 3.103 N2 XFER TERM
Verify MCC-H performed Steps 1 & 2.2, then
Verify Step 2.1 complete and then,
Perform Steps 2.5-4.1, 4.5
Ref. MSG 060 for Stow Locations

## PLT JOHNSON

SUPPLY/WASTE WATER DUMP
(ORB OPS, ECLS)Initiate Waste Dump
Ref. MSG 058

SUPPLY/WASTE WATER DUMP
(ORB OPS, ECLS)
Terminate Waste Dump

CWC OVERBOARD DUMP
(ORB OPS, ECLS)Initiate Dump
Ref. MSG 058

EXERCISE

CWC OVERBOARD DUMP
(ORB OPS, ECLS) Terminate Dump
Ref. MSG 058

## MS3 DOI

ASSY OPS: 3.101 1J STOWAGE PREP
Steps 1, 2 & 5 (1J Kit & VOK)
Ref. MSG 030
Ref. MSG 060 for Stow Locations

ASSY OPS: 3.101 1J STOWAGE PREP
Steps 3 & 5 (JEMRMS & Closeout)
Ref. MSG 030
Ref. MSG 060 for Stow Locations

ASSY OPS: 2.109 BAG 9 RETRIEVAL
V-band Clamp thread on JLP
Standoff Duct can be a sharp
edge hazard. Take care when
accessing the Clamps.
Ref. MSG 060 for Stow Locations

ASSY OPS: 3.101 1J STOWAGE PREP
Steps 4-5 (BDS & Closeout)
Ref. MSG 030
Ref. MSG 060 for Stow Locations

JLP PCBM COVER RELOCATE
Ref. 052, Item 2 & MSG 060 for Stow Locations

TRANSFER OPS
Ref. Transfer List

ASSY OPS: 1.106 JLP FAN
ACT/DEACT-MKAM Step 2 (Deact) except SRCA off step

## MCC

## NOTES

UPDATE
H2O WASTE
DUMP QTY

UPDATE
H2O SPLY DUMP
QTY TK A & B

# STS-123 (FD07 )

GMT Date 03/17 (077) | W | TDRS E | TDRS Z | DORB 4 5 6 7 | ORB 93 94 95 96 | MET Day 005 | STS ATI BIAS -XLV -ZVV (h2o)

| MET | MS1 BEHNKEN | MS2 FOREMAN | MS4 LINNEHAN | NOTES |
|---|---|---|---|---|
| 20:00 | PUBLIC AFFAIRS EVENT<br>ISS KU TDRW: 19:45-20:08<br>Ref. MSG 056 | PUBLIC AFFAIRS EVENT<br>ISS KU TDRW: 19:45-20:08<br>Ref. MSG 056 | PUBLIC AFFAIRS EVENT<br>ISS KU TDRW: 19:45-20:08<br>Ref. MSG 056 | |
| | EVA SYS: 1.515 EMU METOX/LIOH/ BATTERY REPLACEMENT<br>REF: STS-123 CONSUMABLE TRACKING CC (EVA) | ASSY OPS: 3.101 1J STOWAGE PREP<br>Steps 1, 2 & 5 (1J Kit & VOK)<br>Ref. MSG 030<br>Ref. MSG 060 for Stow Locations | EVA SYS: 1.515 EMU METOX/LIOH/ BATTERY REPLACEMENT<br>REF: STS-123 CONSUMABLE TRACKING CC (EVA) | |
| 03:00 | PRE EVA 3 TOOL CONFIG<br>(EVA, TIMELINES) | | PRE EVA 3 TOOL CONFIG<br>(EVA, TIMELINES) | |
| 21:00 | | | | |
| | ROBO: 1.505 SPDM CONFIG FOR EVA 3 | EXERCISE | P&I Changes to EVA 3 Timeline<br>(EVA, EVA CHECKLIST)<br>Ref. MSG 059 | |
| 04:00 | | | | |
| | | TRANSFER OPS<br>Ref. Transfer List | | |
| 22:00 | EVA SYS: 1.305 EQUIP LOCK PREP<br>Select Overgloves for EVA use.<br>REF: STS-123 CONSUMABLE TRACKING CC (EVA)<br>Ref. MSG 013 | | EVA SYS: 1.305 EQUIP LOCK PREP<br>Select Overgloves for EVA use.<br>REF: STS-123 CONSUMABLE TRACKING CC (EVA)<br>Ref. MSG 013 | |
| 05:00 | | | | |
| 23:00 | PRE-SLEEP ACTIVITY<br>(ORB OPS, CREW SYS) | | PRE-SLEEP ACTIVITY<br>(ORB OPS, CREW SYS) | |
| 06:00 | | TRANSFER BRIEF<br>Call down status to MCC | | |
| 00:00 | | | | |

11

# STS-123 (FD07 )

GMT Date 03/17 (077) | W | TDRS E | TDRS Z | DORB 7 8 9 | ORB 96 97 98 | MET Day 006 | STS ATI BIAS -XLV -ZVV

| CDR GORIE | PLT JOHNSON | MS3 DOI | MCC | NOTES |
|---|---|---|---|---|
| JOINT OPS: 3.103 N2 XFER TERM<br>Verify MCC-H performed Steps 1 & 2.2, then<br>Verify Step 2.1 complete and then<br>Perform Steps 2.5-4.1, 4.5<br>Ref. MSG 060 for Stow Locations | TV (ILLUMINATOR OPS)<br>(P/TV, CUE CARDS)<br>ILLUMINATORS ON - A,D | | | |
| MNVR FROM SLP VIEWING WITH OBSS TO -Y TRKR CLEAR<br>(PDRS, VIEW SUPT) | MNVR FROM SLP VIEWING WITH OBSS TO -Y TRKR CLEAR<br>(PDRS, VIEW SUPT) | PRE-SLEEP ACTIVITY<br>(ORB OPS, CREW SYS) | | |
| EVA 3 PROCEDURE REVIEW<br>REF: EVA 3 BRIEFING CARD<br>(EVA, TIMELINES) | EVA 3 PROCEDURE REVIEW<br>REF: EVA 3 BRIEFING CARD<br>(EVA, TIMELINES) | EVA 3 PROCEDURE REVIEW<br>REF: EVA 3 BRIEFING CARD<br>(EVA, TIMELINES) | | |
| PRE-SLEEP ACTIVITY<br>(ORB OPS, CREW SYS) | | | | |
| NETMEETING VIDEO CONFERENCING (ORB OPS, PGSC)<br>Private Medical Conference<br>KU TDRW: 02:17-02:53 [A] | PRE-SLEEP ACTIVITY<br>(ORB OPS, CREW SYS)<br>√ HUM SEP for H2O Accumulation | PRE-SLEEP ACTIVITY<br>(ORB OPS, CREW SYS) | | OCA-PMC |
| [A] Omit VLHS item in Step 1<br>Omit Step 3<br>Use A/G2 for Audio and inform MCC which PGSC will be used. | | | | |
| PRE-SLEEP ACTIVITY<br>(ORB OPS, CREW SYS) | | | | |

# STS-123 (FD07 )

GMT Date 03/17 (077) | W | TDRS E | TDRS Z | DORB 7 8 9 | ORB 96 97 98 | MET Day 006 | STS ATI BIAS -XLV -ZVV

| MET | MS1 BEHNKEN | MS2 FOREMAN | MS4 LINNEHAN | NOTES |
|---|---|---|---|---|
| 00:00 | PRE-SLEEP ACTIVITY (ORB OPS, CREW SYS) | PRE-SLEEP ACTIVITY (ORB OPS, CREW SYS) | PRE-SLEEP ACTIVITY (ORB OPS, CREW SYS) | |
| 07:00 | | | | |
| 01:00 | EVA 3 PROCEDURE REVIEW REF: EVA 3 BRIEFING CARD (EVA, TIMELINES) | EVA 3 PROCEDURE REVIEW REF: EVA 3 BRIEFING CARD (EVA, TIMELINES) | EVA 3 PROCEDURE REVIEW REF: EVA 3 BRIEFING CARD (EVA, TIMELINES) | |
| 08:00 | | | | |
| 02:00 | PRE-SLEEP ACTIVITY (ORB OPS, CREW SYS) | | PRE-SLEEP ACTIVITY (ORB OPS, CREW SYS) | |
| | EVA SYS: 2.305 10.2 PSIA CAMPOUT MASK PREBREATHE<br>REF: PRE EVA 3 TOOL CONFIG (EVA, TIMELINES)<br>REF: 123 CONSUMABLES TRACKING CC (EVA) | | EVA SYS: 2.305 10.2 PSIA CAMPOUT MASK PREBREATHE<br>REF: PRE EVA 3 TOOL CONFIG (EVA, TIMELINES)<br>REF: 123 CONSUMABLES TRACKING CC (EVA) | |
| 09:00 | | PRE-SLEEP ACTIVITY (ORB OPS, CREW SYS) | | |
| 03:00 | | | | |
| 10:00 | PRE-SLEEP ACTIVITY (ORB OPS, CREW SYS) | | PRE-SLEEP ACTIVITY (ORB OPS, CREW SYS) | |
| 04:00 | | | | |

We've been thinking hard about wear and tear on EMU gloves, and you'll be glad to know we have a prototype solution in the works. It's called the **M**mod **R**esistant **H**andling **A**id for **N**ormal **D**exterity (MR HAND). Here is one of our technicians modeling MR HAND.

Boy is MR HAND cool! It has a small fusion reactor cell (hence the dark glasses) to power the electromechanical actuators which are controlled directly by your amplified brain waves.

We are having some problems however when it picks up the other EVs strong thoughts -- err... still some development to do. So take care and think good thoughts out there.

YOUR CURRENT ORBIT IS: 186 X 180 NM

NOTAMS:

| | |
|---|---|
| EDW – | LAKEBED RUNWAYS RED. |
| NOR – | LAKEBED RUNWAYS GREEN. |
| HAW – | RWY 31 CLOSED. RWY 13 TODA 8,994'. |
| WAK – | CLOSED. NOT USABLE. |
| IKF – | NO AGREEMENT. NOT USABLE. |
| BEN – | POLITICALLY NOT RECOMMENDED/NOT SUPPORTED. |
| ZZA – | FIRST 600M (~2,000') OF RWY 30L NOT AVAILABLE. 10,200' REMAINING. |
| GUA - | RWY 06L BARRIER UP 1565' FROM THRESHOLD. |

NEXT 2 PLS OPPORTUNITIES:

EDW22 ORB 95 – 05/22:47 (FEW100 SCT200 030/08P14)
EDW22 ORB 111 – 06/23:09 (FEW250 280/07P13)

OMS TANK FAIL CAPABILITY:

L OMS FAIL: NO R OMS FAIL: NO

LEAKING OMS PRPLT BURN:

L OMS LEAK: ALWAYS BURN RETROGRADE
R OMS LEAK: ALWAYS BURN RETROGRADE

OMS QUANTITIES(%)

L OMS OX = 34.7 R OMS OX = 33.8
FU = 34.3 FU = 33.6

SUBTRACT I'CNCT COUNTER FROM CURRENT OMS QUANTITIES

DELTA V AVAILABLE:

| | |
|---|---|
| OMS | 346 FPS |
| ARCS (TOTAL ABOVE QTY 1) | 40 FPS |
| TOTAL IN THE AFT | 386 FPS |
| | |
| ARCS (TOTAL ABOVE QTY 2) | 73 FPS |
| FRCS (ABOVE QTY 1) | 25 FPS |
| | |
| AFT QTY 1 | 80 % |
| AFT QTY 2 | 42 % |

| SYSTEM | FAILURE | IMPACT | WORK AROUND |
|---|---|---|---|
| OMS | LOMS N2 Tank is experiencing pressure decay at a rate of approximately 0.55 psi/hr. | At the current leak rate there is no impact to operations. If the leak rate increases, a single start still remains in the accumulator. | No action required. |

FD06 MMT Summary

The FD06 MMT met briefly to review mission progress. The team was excited to see you ingress the JLP. Also, with the successful recovery of power to the SPDM through the SSRMS end effector, the mission is right on track. The team is looking forward to another successful spacewalk on EVA #2.

**Orbiter Systems:** The Left OMS engine is experiencing a small GN2 leak that is within specification limits. This signature was last seen during STS-118 and was expected. Also, no changes have been observed in the rate at which the APU 1 Fuel Tank pressure is decreasing. At this time, the team feels confident that the signature indicates a GN2 leak. A formal review of the leak signature, conclusions, and rationale is expected at the FD08 MMT.

MSG 055 - FD07 TRANSFER MESSAGE

Greetings Takao and Bob!

**5MLE Bag Return Layouts**:
As promised, your 5MLE Bag Return Layouts have been uplinked by MMACS in today's execute package as MSG 61.

**Multimeter:**
Yesterday, Yuri recovered the failed station multimeter. As such, you are now 'Go' to perform the multimeter swap (items 39 & 718).

**AFD PCS:**
We've marked the 'original' AFD PCS (item 3) as complete since it was transferred to ISS on FD04. The 'new' AFD PCS (originally Columbus PCS) is now item 3a. Please transfer this laptop, along with the power supply in use, during the FD15 PCS DEACT & XFER.

For STS, the Transfer List Excel file, FD07_TransferList_STS123.xls, is located on the KFX machine in **C:\OCA-up\transfer**.

For ISS, the Transfer List Excel file, FD07_TransferList_STS123.xls, is located in **K:\OCA-up\transfer**.

**Crewmembers Scheduled for Generic Xfer Ops**

- Dom – 00:50
- Box – 00:40
- Mike – 01:55
- Takao – 00:50

**Please update the Transfer List as follows:**
In **LAYOUTS** tab:
Insert pages L-3 through L -9 (from MSG 61)

In **RESUPPLY** tab:
Replace Resupply Page 2

Make Pen and Ink change to Return Page 8:
Item 39: In PROCEDURES/Constraints/ **Comments column, strikethrough ~~**After MCC "GO"~~ and replace with "You are now 'Go' to…"

In **RETURN** tab:
Make Pen and Ink change to Return Page 5:
Item 608: In PROCEDURES/Constraints/ **Comments column, add constraint, **"Add foam/clothing to 5MLE Bag to fill in sides for return."**

Replace Return Page 8

Make Pen and Ink change to Return Page 11:
Item 712: Update "Stowage at Undock" to MD CEIL PORT 1 (Bag A) (in Return Bag 404)
Please call us with questions.
- The Transfer Team

# STS-123/1JA Resupply Transfer List

| CHNG | ☑ | FD | Initials | Item # | Item Name | Qty | Initial Stowage | Temp Stowage | Stowage at Undock | Wt (lbs) | PROCEDURES/**Constraints**/ **Comments |
|---|---|---|---|---|---|---|---|---|---|---|---|
| | ☑ | 4 | | 2 | BORE O-RING<br>FACE O-RING | 1 ziplock | MA9G | | PMA2 | 0.50 | **Reqd for EGRS HATCH CLOSE.** |
| X | ☑ | 4 | | 3 | A31p Laptop<br>[old AFD PCS]<br>[s/n 1114] | 1 | MA9J | COLUMBUS deployed | COLUMBUS deployed<br><br>~~NOD1S4_C2 (in 1.0 CTB, s/n 1189)~~ | 7.94 | **This item (the original AFD PCS) was transferred to ISS on FD04.<br>~~**Transfer on FD15 during PCS DEACT & XFER .~~<br><br>**Transfer laptop including all of its internal components ~~and power supply in use (green brick, ref item 4)~~. No other peripherals transfer (i.e. 1553 card or associated cables, etc.)** |
| X | | | | 3a | A31p Laptop<br>[new AFD PCS]<br>[s/n 2210] | 1 | COLUMBUS deployed | AFD | NOD1S4_C2 (in 1.0 CTB, s/n 1189) | 7.94 | **This item (previously the Columbus PCS) was set-up as the new AFD PCS on FD04.<br><br>**Transfer on FD15 during PCS DEACT & XFER .**<br><br>**Transfer new AFD PCS laptop including all of its internal components and power supply in use (green brick, ref item 4). No other peripherals transfer (i.e. 1553 card or associated cables, etc.)** |
| X | | | | 4 | A31p 28V DC Power Supply<br>[s/n 1310]<br>[Green Brick] | 1 | MA9J | STS deployed | NOD1S4_C2 (in 1.0 CTB, s/n 1189) | 4.50 | **Transfer power supply in use with the A31P Laptop. Ref item 3a.<br><br>**Cable between Power Supply and Laptop does *not* transfer. |
| | ☑ | 4 | | 5 | CD CARRYING CASE | 1 | MA9J | | LAB1S5_A1 | 3.00 | **Reqd for FD07 ER2 (Express Rack 2).** |
| | ☑ | 4 | | 6 | FSL LAN Cable Repair Kit | 1 | MA16L | | COL1D4_A1 | 0.88 | |
| | ☑ | 4 | | 7 | GEL & NETTED BRUSH KIT | 1 | MD CEIL PORT 2 (Bag F) | | NOD1P4_D (in 1.0 CTB, s/n 1074) | 13.00 | |

[ ] - notes included by transfer team, - not on actual label

# STS-123/1JA Return Transfer List

| CHNG | ☑ | FD | Initials | Item # | Item Name | Qty | Initial Stowage | Temp Stowage | Stowage at Undock | Wt (lbs) | PROCEDURES/**Constraints**/ **Comments |
|---|---|---|---|---|---|---|---|---|---|---|---|
| | | | | 702.4 | SJEU Covers | 7 | ISS External | NODE 1 in mesh bag | MD CEIL STBD 2 (Bag H) (in CLPA Box) | 3.50 | **Removed EVA 1 - 3.<br><br>**Fold blanket as small as possible.** |
| X | | | | 702.5 | CLPA Blanket [p/n 51617-0053-1] | 1 | FGB 105 (in 3.0 CTB with CLPA Box) ~~TBD~~ | temp stowed NODE 1 (with CLPA Box) ~~TBD~~ | MD CEIL STBD 2 (Bag H) (in CLPA Box) ~~TBD~~ | 1.86 | **After packing items 702.1 - 702.4 *and 702.6*, pack this item in the CLPA box if possible. Ref item 702.<br><br>**If item does not fit in CLPA box, stow it on ISS in an empty CTB at NOD1P2.<br><br>**RECORD s/n of CTB_____. Report to MCC.<br><br>~~EVA is re-evaluating return of this item.~~ |
| | | | | 702.6 | SJEU Covers | 7 | ISS External | NODE 1 in mesh bag | MD CEIL STBD 2 (Bag H) (in CLPA Box) | 3.50 | **After packing items 702.1 - 702.4, pack additional covers in the CLPA box if possible. Ref item 702.<br><br>**If covers do not fit in CLPA box, stow them on ISS in an empty CTB at NOD1P2.<br><br>**RECORD s/n of CTB_____. Report to MCC.<br><br>**Removed EVA 1 - 3. |

OBJECTIVE:
Retrieve JEM Bag 11 JLP1PA1 standoff.

LOCATION:
JLP1PA1

DURATION:
45 minutes
- 10 minutes for Preparation
- 15 minutes for Rotating Rack down and up
- 10 minutes for JEM Bag 11 Retrieval
- 10 minutes for Closeout

CREW:
Two (Second crewmember required for rack rotation)

TOOLS:
Mini-Maglite (if required)

1. ROTATING WS RACK DOWN

JLP1A1

1.1 Remove Rack Upper Beta Cloth Closeout from Standoff, Velcro. Temporarily stow.

1.2 Partially remove Rack UIP Closeout from Standoff, Snap fasteners (two), Velcro.

1.3 ✓Rack rotation path unobstructed

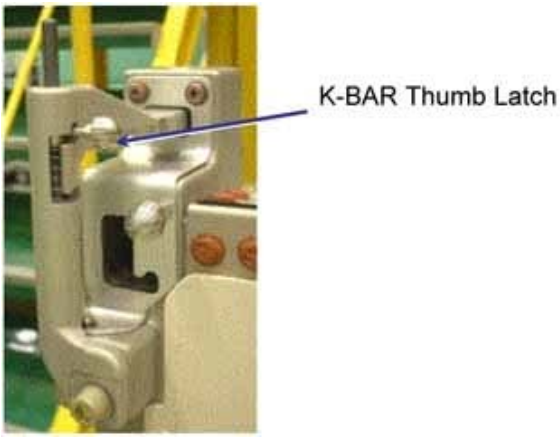


Figure 1. - K-BAR Assembly (Rack Upper Left).

1.4 Disengage Rack K-BAR Thumb Latches (two) from Standoff.
Slowly rotate Rack down to a controlled stop.
Temporarily restrain as required.
Refer to Figure 1.

2. RETRIEVING JEM BAG 11 FROM STANDOFF

| NOTE |
| --- |
| Some items shown in Figure 2 may be already retrieved. |

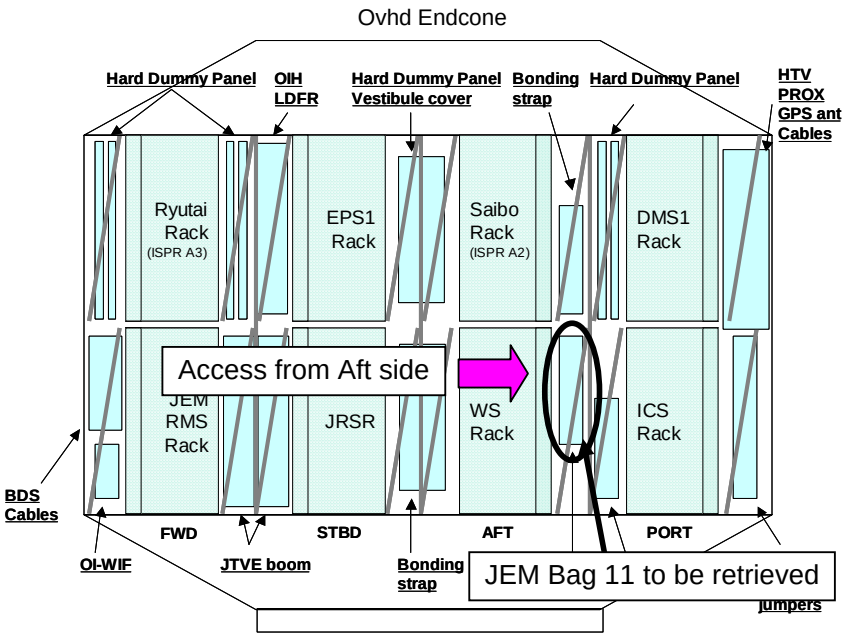


Figure 2.- JLP Standoff Stowage Overview

JLP1PA1 2.1 Partially remove FDS partition, Velcro.

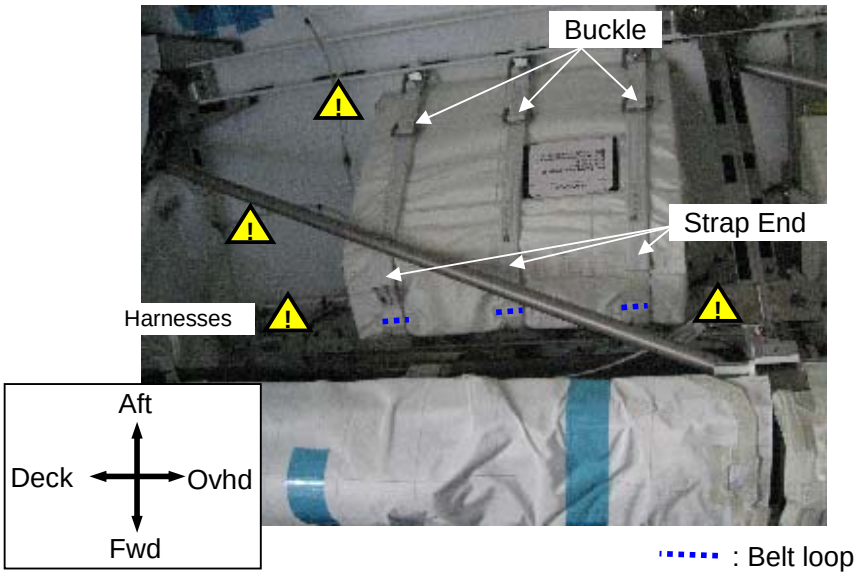


Figure 3.- JEM Bag 11 Straps

| WARNING |
| --- |
| Duct Band Clamp threads can be sharp edge. Care must be taken when accessing Band Clamps. |

| CAUTION |
| --- |
| Care must be taken not to damage thin harnesses routed on JLP structure. Examples of thin harnesses are shown in Figure 3. |

2.2 Peel Strap end, Velcro.
Pull Strap out from Belt Loop and Buckle.
Refer to Figures 3.

Repeat for remaining Straps (two).

Bag Closed Bag Opened

Figure 4.- Foams (JEM Bag 11 Opened)

2.3 Open JEM Bag 11, Velcro.
Take Top Foam from JEM Bag 11.
Temporarily stow.
Refer to Figure 4.

Table 1.- JEM Bag 11 Contents

| Foam | Contents |
|---|---|
| Second | Hard Dummy Panel Strap (two) |
| Third | Hard Dummy Panel Strap (four) |
| Fourth | BDS Console Interface Panel<br>BDS Cable 16 (attached to BDS Console Interface Panel)<br>BDS Cable 17 (attached to BDS Console Interface Panel)<br>RMS Console Cable Cover |
| Bottom | Hard Dummy Panel Strap (ten) |

Second Foam

Third Foam

Fourth Foam

Bottom Foam

Figure 5.- JEM Bag 11 Contents

| NOTE |
| --- |
| In the next step, hardware and foam will be removed from Bag 11. Foam will be staged for trash and hardware will be placed back in Bag 11. |

2.4 Take Hard Dummy Panel Straps from Second Foam.
Temporarily stow Hard Dummy Panel Straps and Foam.
Repeat for remaining Foam.
Refer to Figures 4 and 5.

2.5 Take JEM Bag 11 from standoff.
Stow the following in JEM Bag 11.
- Hard Dummy Panel Straps (sixteen)
- BDS Console Interface Panel
- BDS Cable 16 (attached to BDS Console Interface Panel)
- BDS Cable 17 (attached to BDS Console Interface Panel)
- RMS Console Cable Cover

Refer to Figure 5.

3. CLOSE OUT

3.1 Check for FOD within 1m.

3.2 Attach FDS Partition.

JLP1A1 3.3 Rotating WS Rack Up

✓Rack rotation path unobstructed

Rack K-BAR Thumb Latches (two) → up position
Slowly rotate Rack up.
Engage Rack K-BAR Thumb Latches (two) into Standoff Capture Mechanisms.

3.4 Attach Rack Upper Beta Cloth Closeout, Velcro.

3.5 Attach Rack UIP Closeout to Standoff, hand tighten Snap fasteners (two), Velcro.

3.6 Notify **SSIPC** of task completion.
Stow all tools, equipment and hardware.
Update IMS of stowage location of hardware.

1. SHUTTLE CONDENSATE COLLECTION
At 5/16:00 MET, perform CHANGEOUT of SHUTTLE CONDENSATE COLLECTION (ORB OPS, ECLS), p. 5-36. Retrieve empty Condensate CWC s/n 5075 from Middeck Ceiling Port 2 (Bag F) and temp stow full Condensate CWC s/n 5093 for dumping later today.

2. GATHER DUMP EQUIPMENT
In preparation for the upcoming PWR and CWC dump activities, it is prudent to pregather the following equipment prior to the dumps due to limited time available in attitude:

a. AL1D1_B1: OGS PWRs s/n 2002 and 2004
b. AL1D1_A2: EVA PWRs s/n 1012 and 1013
c. Middeck: Condensate CWC s/n 5093 which was temp stowed earlier today.
d. Contingency Hose and Cable Kit (CHCK) in the window shade bag: SPLY H2O Dumpline Purge Device, B-B hose, R-Y QD adapter, and Y-Y hose
e. Break out box locker (MF28O): Waste Water Dump (WWD) Filter

3. WASTE WATER DUMP
Perform a Waste Water Dump using SUPPLY/WASTE WATER DUMP (ORB OPS, ECLS) p. 5-2. MCC will TMBU limits in steps B and K.

Prior to opening the dump valve, verify with MCC-H that ISS arrays are in proper config.

Dump the waste tank to 5%. Waste nozzle open time will be ~30 minutes.

4. CWC OVERBOARD DUMP
Verify that the PWR Dumps are complete prior to dumping the condensate CWC. Do not dump PWRs and the CWC SIMO.
After completing the Waste Water Dump, dump Condensate CWC s/n 5093 using CWC OVERBOARD DUMP (ORB OPS, ECLS) p. 5-32. MCC will TMBU limits in steps B and H.

Waste nozzle open time will be ~60 minutes. When the CWC dump is complete, temp stow the empty CWC in the Middeck Ceiling Port 2 (Bag F) for future use.

5. PWR DUMP – SUPPLY LINE
Dump PWR s/n 2004 first, followed by 2002, 1012, and 1013 using PWR DUMP – SUPPLY LINE (ORB OPS, ECLS) p. 5–40, Steps 1-6 (MCC will TMBU limits in Step 2).

Prior to opening the dump valve, verify with MCC-H that ISS arrays are in proper config.

Dump the PWRs even if they appear empty to ensure any residual air is removed prior to refilling the bags. Nozzle temperature increase is an indication that the PWRs are completely vented.

After the PWRs are dumped, temp stow the PWRs near the Galley for future fills. Stow the B-B hose and R-Y QD in the ZipLock bag and label it “USED” with gray tape. Stow the ZipLock bag in the CHCK.

Immediately proceed to the Supply Water Dump.

6. SUPPLY WATER DUMP

Perform a Supply Water Dump using SUPPLY/WASTE WATER DUMP (ORB OPS, ECLS) p. 5–2. MCC will TMBU limits in Steps B and K.

Dump Supply Water for 75 minutes.

**Big Picture:**
Great job on EVA 2. It was an awesome sight to see SPDM come alive. For EVA 3 we will proceed as planned with some small deltas detailed below. We will continue removing the remaining covers but will maintain a bingo time of EVA PET 02:30 for beginning the LWAPA transfer.

**Mike:**
The EMU Glove team has reviewed the photos of your prime gloves s/n 6065 (6HD) and determined that they are no-go for EVA 4. You will need to go to your backup gloves so we will have you change them during the EMU Reconfig/Swap for EVA 4 activity scheduled for FD09. Your overgloves looked good and those are cleared for future use. Additionally, the EMU Team has a couple of questions for you to help them come up with some suggestions on how to relieve any foot pressure.

1. Describe the contact
    - Could you relieve contact by moving foot fore/aft?
    - Could you relieve contact by moving foot up/down?
    - Could you relieve contact by bending knees?
2. What was your boot/sock configuration for this EVA?
    - Socks?
    - Moleskin?
    - Any sock, moleskin or heel pad changes since last NBL?
3. Was a thorough boot bladder manipulation performed pre EVA?
4. Describe the effort needed to close Body Seal Closure. Did it feel like there was plenty of torso room shoulder to crotch?
5. Did you have Heel and Shoulder suit contact?

**Rick:**
Your prime gloves and overgloves look good and they are cleared for EVA 3.

Please update the EVA Checklist as specified below:

**Pg 7-69**
You will need either a large trash bag or 2 additional hooks for the extra covers, your choice which method to use.

<u>MED ORU BAG</u>
Add:

- □ Lg trash bag or extra RET/Adj inside ORU bag (will need 2 hooks)

We want to put the JLP trunnion covers in the Airlock for EVA3. Reference pg 7-186-190 for the cover prep steps. The covers are stowed in NODE 1.

<u>AIRLOCK CONFIG</u>
Add:
- □ Crewlock bag w/ JLP trunnion covers

**Pg 7-77**
EV2:
Move step 17 prior to step 15.
Edit step 17 as follows:
17. Remove Lg Trash bag from ORU bag; tether to HH **0008**

**Pg 7-78**
EV1:
You will perform step 6

EV2:
Delete steps 2, 10, 11, & 12

**Pg 7-80**
EV1:
Delete step 2a
Add after step 2d:
If SJEU cover 2.4 cannot be reached by EV2:
GCA to SJEU cover 2.4; remove and replace straps

EV2:
Edit step 1 as follows:
1. Transfer Lg trash bag from HH **0008** to EV1

**Pg 7-81**
EV2:
Delete steps: 8, 9, 14-17
Edit steps 13 & 21 as follows:
13. Tether, remove SJEU cover **2.4 (if accessible)**
21. Tether, remove any remaining SJEU covers (~~**1.1**~~, 1.2)

**Pg 7-82**
EV2:
Delete step 35
Edit Steps 36 & 37 as follows:
36. Fold over Velcro straps to cover SJEU blanket grounding patches (**2** total) **for 1.7**
37. Secure Arm 1 FSE EDF interface blanket flaps over single EDF holes (2) **(not sure if we got both or 1 on EVA2)**

**Pg 7-90**

MED ORU BAG

Add:

- □ Lg trash bag or extra RET/Adj inside ORU bag (will need 2 hooks)

AIRLOCK CONFIG

Add:

- □ Crewlock bag (JLP trunnion covers)

Contents:

**Timeline Procedures:**

N2-ZENITH-HATCH
JLP HATCH
A/L-IV HATCH-DECAL
N2-ZN-HTCH-CVR-INSTL
EXPRS2-ELC S/W-START
EXPRS2-ELC S/W-END
P/TV-EVA DCS-CNFG
N2 XFER TERM
INSPACE2 H/W-STOW
P/TV-EVA DCS-TRNARND
MSG VIDEO EQUIP-STOW
MSG-COF-PREP-P1
JLP-1J STOW PREP1
JLP-1J STOW PREP2
JLP-1J STOW PREP3
JLP-BAG 9 RTRVL
JLP-JUMPR & CVR RTRVL
JLP-PCBM CVR-RLCT

**Tasklist Procedures:**

HRF RACK ACOUSTIC MOVE
MELFI-VEL STRAP-RMV
MSG-BATTERY-REMOVE
TRQ-FSS-JMPR-QD
NOD2SD2-BBA-R&R
EHS-CO2-SDTO MON

**Timeline Procedures:**

| **N2-ZENITH-HATCH<br>JLP HATCH<br>A/L-IV HATCH-DECAL** | | | | | | |
|---|---|---|---|---|---|---|
| **16-0005 1.2.528 HATCH HANDLE GUIDE RING INSTALLATION** | | | | | | |
| Type: Standard | | | IMS Plan: No | | | |
| **#** | **LOCATION** | **ITEM NAME** | **P/N** | **S/N** | **B/C** | **Notes** |
| 1 | **NOD2S5_G2**<br>1.0 CTB: Hatch Handle Guide Ring, S/N 1350, B/C CTB00016J | Hatch Handle Guide Ring [Qty 2] | 683-13374-1 | Any | Any | **REPORT** S/N and B/C to MCC-H and location of install. |
| 2 | **NOD2D2**<br>1.0 CTB: MKAK, S/N 1152, B/C 004146J | Hatch Handle Stowage Decal [Qty 4] | 683-13373-1 | Any | Any | **REPORT** S/N and B/C to MCC-H and location of install.<br><br>NOTE: only two of these will be used for this activity; the remaining two will be restowed per the Restow note below.<br>A/L decal in Ziplock labeled “TO BE INSTALLED IN U.S. A/L”<br>JLP decal in Ziplock labeled “TO BE INSTALLED IN JEM QTY 3” |
| 3 | **Crew Pref** | DCS 760 Camera | SEZ33113001-304 | - | - | |
| 4 | **Crew Pref** | Gray Tape | - | - | - | |
| 5 | **A/L1O1_B1** | Airlock Contingency Tool Kit | SED32106620-001 | - | - | |
| 6 | **NOD2 Deployed**<br>Mesh Bag: VOK Tools | Ratchet, 1/4" Drive | TM830 | - | - | |
| 7 | | 5/32" Hex Head, 1/4" Drive | TMA5E | - | - | |
| 8 | | (10-50 in-lbs) Trq Wrench, 1/4" Drive | SEG33112395-301 | - | - | |
| 9 | **NOD1D4_G2**<br>Drawer 4 | Wire Cutters | 184BCP | - | - | |
| **Type: Restow** | | | IMS Plan: No | | | |
| 10 | **NOD2S5_G2**<br>1.0 CTB: Hatch Handle Guide Ring, | Hatch Handle Stowage Decal [Qty 2] | 683-13373-1 | - | - | These were not used for this procedure. |

| | | | | | | |
|---|---|---|---|---|---|---|
| | S/N 1350,<br>B/C CTB00016J | | | | | |

1

| **N2-ZN-HTCH-CVR-INSTL** | | | | | | |
|---|---|---|---|---|---|---|
| **1.605 USOS COMMON HATCH WINDOW COVER INSTALL** | | | | | | |
| Type: Standard | | | IMS Plan: No | | | |
| **#** | **LOCATION** | **ITEM NAME** | **P/N** | **S/N** | **B/C** | **Notes** |
| 1 | **NOD2S5_B1** | Outer Hatch Window Cover Assembly (aka EVA Hatch Window Cover) | 683-13141-1 | Any | Any | **REPORT** S/N and B/C to MCC-H. |

2

| **EXPRS2-ELC S/W-START**<br>**EXPRS2-ELC S/W-END** | | | | | | |
|---|---|---|---|---|---|---|
| **2.031 Load A31P Laptop with Release 5 Common Laptop** | | | | | | |
| **Type: Standard** | | | IMS Plan: No | | | |
| # | **LOCATION** | **ITEM NAME** | **P/N** | **S/N** | **B/C** | **Notes** |
| 1 | **LAB1S5_A1**<br>CD Library labeled Volume II, S/N 4A, B/C POC90133J | EXPRESS RIC Release 5 | 683-36215-2033 | 0001 | | Slot 017 |
| 2 | | EXPRESS Laptop Release 5 | 683-36216-3045 | 0001<br>0002 | | Slot 19<br>Slot 20<br>These are to be moved to 1E Library for Return.<br>**DO NOT USE FOR SW LOAD** |
| 3 | | Ghost Boot Floppy (1 of 2) | 683-36216-6012 | 0001 | | Slot 025 |
| 4 | | Ghost Boot Floppy (2 of 2) | 683-36216-6012 | 0001 | | Slot027 |
| 5 | **LAB1S5_A1**<br>CD Library (1JA), S/N 1020, B/C POC90189J | EXPRESS Laptop Release 5 | 683-36216-3045 | 1754<br>1755 | | Remove both CDs from 1JA CD Library for transfer to CD Library: Volume II, S/N 4A after SW load. |
| **Type: Restow** | | | IMS Plan: No | | | |
| 6 | **LAB1S5_A1**<br>CD Library: Volume II, S/N 4A, B/C POC90133J | EXPRESS RIC Release 5 | 683-36215-2033 | 0001 | | Slot 017 |
| 7 | | EXPRESS Laptop Release 5 | 683-36216-3045 | 1754<br>1755 | | Slot 019<br>Slot 020 |
| 8 | | Ghost Boot Floppy (1 of 2) | 683-36216-6012 | 0001 | | Slot 025 |
| 9 | | Ghost Boot Floppy (2 of 2) | 683-36216-6012 | 0001 | | Slot027 |
| 10 | **1J/A Transfer List Return Item #602**<br>CD Library (1E), | EXPRESS Laptop Release 5 | 683-36216-3045 | 0001<br>0002 | | |

| | | | | | | |
|---|---|---|---|---|---|---|
| | S/N 1019, B/C POC90606J | | | | | |

1

| P/TV-EVA DCS-CNFG | | | | | | |
|---|---|---|---|---|---|---|
| **2.701 760 EVA CAMERA** | | | | | | |
| **Type: Standard** | | | IMS Plan: No | | | |
| # | **LOCATION** | **ITEM NAME** | **P/N** | **S/N** | **B/C** | **Notes** |
| 1 | **A/L1D2_Behind Closeout** 1.0 CTB: EVA CAMERA ACCESSORIES, S/N 1221, B/C 006717J | 1GB EVA Flash Card [QTY: 2] | SEZ33118356-301 | - | - | **REPORT** S/N and B/C to MCC-H. |
| 2 | | EVA Action Finder | SED33110611-327 | - | | **REPORT** S/N to MCC-H |
| 3 | | Camera Mtg Assy Thermal Blanket | SED33117417-301 | - | - | **REPORT** S/N to MCC-H |
| 4 | | Camera Mounting Assy | SED33113695-302 | - | - | |
| 5 | | EVA Camera Blanket | SEZ33113449-301 | - | - | |
| 6 | | 28mm, 35mm, 50mm Lens Cap | SEZ33113449-303 | - | - | **REPORT** S/N to MCC-H |
| 7 | | Tie Wrap [QTY: 6] | SDD13101649-302 | - | - | AKA Zip Ties.<br><br>**REPORT** to MCC-H the total number used for inventory management. |
| 8 | **LAB1D3** 0.5 CTB: PhotoTV Consumables, S/N 1360, B/C CTB00265J | Lens Cloth Kit | SED33102528-330 | - | - | |
| 9 | **LAB1D3** ISS Photo/TV Resupply Kit, (0.5 CTB: ISS PHOTO/TV RESUPPLY KIT, S/N 1082, B/C 006531J) | 28mm EVA Lens | SED33105019-301 | - | - | **REPORT** S/N to MCC-H<br><br>Verify the Circular Polar 52mm w/o Glass (EVA Filter w/o Glass) is fully installed on the front of the lens. |

2

| N2 XFER TERM | | | | | | |
|---|---|---|---|---|---|---|
| **3.103 NITROGEN TRANSFER TERMINATION** | | | | | | |
| **Type: Standard** | | | IMS Plan: No | | | |
| # | **LOCATION** | **ITEM NAME** | **P/N** | **S/N** | **B/C** | **Notes** |
| 1 | **Crew Pref.** | Mini-Maglite | 528-20084-5 | - | - | |

| | | | | | | |
|---|---|---|---|---|---|---|
| 2 | **LAB1O5_F2** 0.5 CTB: Acoustic Countermeasures, S/N 1131, B/C 010492J | Generic Earplug Assembly | SEG46116002-301 | - | - | |
| 3 | **A/L1 Crewlock** Crewlock EVA BAG #3, S/N 1001 | Torque Wrench Bag | SEG33110183-301 | 1002 | - | |
| 4 | | Inspection Mirror | 1016T2 | - | - | |

1

| **INSPACE2 H/W-STOW** | | | | | | |
|---|---|---|---|---|---|---|
| **2.013 INSPACE-2 STOW** | | | | | | |
| **Type: Standard** | | | IMS Plan: Yes/No | | | |
| # | **LOCATION** | **ITEM NAME** | **P/N** | **S/N** | **B/C** | **Notes** |
| 1 | **Crew Preference** | Static Wrist Tether | - | - | - | |
| 2 | **COL1O4_B1** | 0.5 CTB: labeled MSG Soft Stowage Bag | SEG33111836-301 | 1003 | 002847J | |
| 3 | | MSG J404 Data Feedthrough | 96M53037-1 | 05-281 | 00MSG143M | |
| 4 | | Ziploc Bag labeled INSPACE-2 TAPES | - | - | - | |
| 5 | | Hi 8 Tape Case | 96M53035-1 | 003 | - | |
| 6 | **NOD1D4_B1** | INSPACE-2 Foam H/W Container | SEG32110501-301 | - | - | |
| 7 | | INSPACE foam transport container | - | - | - | |
| 8 | **LAB1S2** | Digital Tape Case | 96M53038-1 | 003 | - | |
| 9 | **LAB1O1_J2** 1.0 CTB: InSPACE AVIONICS ASSY/LIGHT BOX ASSY/W101 CABL, S/N 1264, B/C 010600J | Foam Cushion for INSPACE | 760-10393-1 | - | - | |
| **Type: Restow** | | | IMS Plan: Yes/No | | | |
| 10 | **LAB1S3_G1** | MSG W301 Video Extension Cable (three) | 7009.80.AJ | - | - | |
| 11 | ISIS DRAWER, FUD | MSG Seat Track Adapter | 7009.80.AP | - | - | |
| 12 | | MSG Video Camera (with | 7009.80.AA | 01-461 | - | |
| 13 | | MSG Wide Angle Lens attached) | 7009.80.AC | - | 00MSG032M | |
| 14 | **LAB1S3_H1** ISIS DRAWER, LGD | MSG Video Multipurpose Arm | 7009.80.AM | - | - | |
| 15 | **LAB1S3_H2** ISIS DRAWER, LUD | MSG Long Velcro Strips (two) | 96M53032-7 | - | - | |

33

| | | | | | | |
|---|---|---|---|---|---|---|
| 16 | **LAB1O1_J2** 1.0 CTB: InSPACE AVIONICS ASSY/LIGHT BOX ASSY/W101 CABL, S/N 1264, B/C 010600J | Foam Cushion for INSPACE | 760-10393-1 | - | - | |
| 17 | | INSPACE W101 INTERFACE POWER CABLE | 67273E77A602 | - | - | |
| 18 | | INSPACE AVIONICS ASSEMBLY | 67273M77A200 | - | - | |
| 19 | | INSPACE LIGHT BOX ASSEMBLY | 67273M77A300 | - | - | |
| 20 | **COL1O4_B1** 1.0 CTB: MSG Resupply #1, S/N 1117, B/C 004111J | Ziploc Bag labeled INSPACE-2 TAPES | - | - | - | Contains used INSPACE tapes |
| 21 | | Digital Tape (one, used) | DVM80TR2 | - | - | |
| 22 | | 8mm tape (used) | 8H120ME-F | - | - | |
| 23 | | Digital Tape Case | 96M53038-1 | 003 | - | |
| 24 | | Digital Tape (one, unused) | DVM80TR2 | - | - | |
| 25 | | Hi 8 Tape Case | 96M53035-1 | 003 | - | |
| 26 | **NOD1D4_B1** | INSPACE OPTICS ASSEMBLY (inside foam transport container) | 67273M77A100 | - | 04INS003M | |
| 27 | | INSPACE-2 Foam H/W Container | SEG32110501-301 | - | - | 528-38606-1? |
| 28 | | INSPACE-2 Coil Assembly (in bag) | 67391M77A100 | CA2-002 | 06INS211M | In ziplock bag with coil assy 001 |
| 29 | | INSPACE-2 Vial Assembly (four) ( in bags) | 67391M77A200 | VA-001<br>VA-002<br>VA-007<br>VA-004 | -<br>-<br>-<br>- | |
| 30 | | INSPACE-2 Light Guide Tool | 67391M77A301 | - | - | In ziplock bag with second light guide tool |
| 31 | | INSPACE-2 Camera 1 Cable | 67391M77A002 | - | 03INS213M | |
| 32 | | INSPACE-2 Camera 2 Cable | 67391M77A003 | - | 03INS214M | |
| 33 | **Temp Stow for MSG VIDEO EQUIP-STOW** | 0.5 CTB: labeled MSG Soft Stowage Bag | SEG33111836-301 | 1003 | 002847J | |
| 34 | | MSG Video Feedthrough | 500.106.AD | 05-041 | 00MSG197M | |

| **P/TV-EVA DCS-TRNARND** | | | | | | |
|---|---|---|---|---|---|---|
| **2.725 760 EVA CAMERA TURNAROUND - CAMERA ONLY** | | | | | | |
| **Type: Standard** | | | IMS Plan: No | | | |
| # | **LOCATION** | **ITEM NAME** | **P/N** | **S/N** | **B/C** | **Notes** |
| 1 | **ISS Deployed** or **LAB1D3** | PCMCIA 1GB Microdrive | SEZ33112992-301 | **-** | **-** | |
| 2 | | 1GB EVA Flash Card [QTY: 2] | SEZ33118356-301 | **-** | **-** | **REPORT** S/N to MCC-H. |

| | | | | | | |
|---|---|---|---|---|---|---|
| 3 | | Lens Cloth Kit | SED33102528-330 | - | - | |
| 4 | **ISS DEPLOYED** or **A/L D2_Behind Closeout** 1.0 CTB: EVA CAMERA ASSESSORIES s/n 1221, b/c 006717J | Tie Wrap [QTY: 4] | SDD13101649-302 | - | - | AKA Zip Ties.<br><br>**REPORT** to MCC-H the total number used for inventory management. |

1

| **MSG VIDEO EQUIP-STOW** | | | | | | |
|---|---|---|---|---|---|---|
| **2.009 MSG VIDEO STOW** | | | | | | |
| **Type: Standard** | | | IMS Plan: No | | | |
| # | **LOCATION** | **ITEM NAME** | **P/N** | **S/N** | **B/C** | **Notes** |
| 1 | **Temp stowed** | 0.5 CTB MSG Soft Stowage Bag | SEG33111836-301 | 1003 | 002847J | |
| **Type: Restow** | | | IMS Plan: No | | | |
| 2 | **LAB1S3_G1** | MSG VIDEO MONITOR (VID MON) | 7009.80.AF | 01-469 | 00MSG009M | |
| 3 | | MSG VIDEO TOUCH PAD | 7009.80.AG | 01-360 | 00MSG015M | |
| 4 | **LAB1S3_H1** | VIDEO MULTIPURPOSE ARM [2] | 7009.80.AM | - | - | Report S/Ns stowed |

35

2

| **MSG-COF-PREP-P1** | | | | | | |
|---|---|---|---|---|---|---|
| **2.048 MSG PREPARATION FOR TRANSFER TO COF** | | | | | | |
| **Type: Standard** | | | IMS Plan: No | | | |
| # | **LOCATION** | **ITEM NAME** | **P/N** | **S/N** | **B/C** | **Notes** |
| 1 | **COL1O4_B1** | 0.5 CTB MSG Soft Stowage Bag | SEG33111836-301 | 1003 | 002847J | |
| 2 | **COL1O4_A1** | MSG W210 E-NET Internal | 03MSG217M | 001 | 03MSG217M | |
| **Type: Restow** | | | IMS Plan: No | | | |
| 3 | **COL1O4_A1** 1.0 CTB MSG Hardware, S/N 1323, B/C 010659J | MSG W203 E-NET EXTERNAL | 96M00559-01 | 001 | 03MSG203M | |

3

| **JLP-1J STOW PREP1**<br>**JLP-1J STOW PREP2**<br>**JLP-1J STOW PREP3** | | | | | | |
|---|---|---|---|---|---|---|
| **3.101 1J STOWAGE PREP** | | | | | | |
| **Type: Standard** | | | IMS Plan: No | | | |
| # | **LOCATION** | **ITEM NAME** | **P/N** | **S/N** | **B/C** | |
| 1 | **NOD2D2**<br>1.0 CTB: MKAK,<br>S/N 1152, B/C 004146J | Ziplock Bag | - | - | - | |
| 2 | | Contents Label [Qty 6] | - | - | - | Labeled “1J Activation Kit”, “JEM BAG 4 JPM/JLP VOK”, “JEMRMS Console Kit”, “JEM BAG 2”, “CTB-J-T2 BDS Kit” and “CTB-J-T1 BDS Kit”. |
| 3 | **JLP1S2 EPS1 Rack Front** | JEM Bag 2 | 80AS56740-109 | 001 | JBAG0002N | |
| 4 | | JEM Bag 4 | 80AS56740-113 | 001 | JBAG0004N | |
| 5 | **NOD2 Deployed**<br>Mesh Bag: VOK Tools | Sharpie | - | - | - | |
| **Type: Restow** | | | IMS Plan: No | | | |
| 6 | **NOD2S5_D2** | Equipment Bag Assy”1J Activation Kit” | G11F5160-1 | 001 | EBA00001N | |
| 7 | | JEM Bag 4 “JPM/JLP VOK” | 80AS56740-113 | 001 | JBAG0004N | |
| 8 | **NOD2D2** | JEM Bag 2 | 80AS56740-109 | 001 | JBAG0002N | |
| 9 | **JLP Deployed**<br>Jettison Stowage Bag | CUSHION (labeled as “IHI K-BAR RIGHT”) (from JEM Bag 2) | NASA CUSHION | - | - | Stage with other CUSHION for later disposal. |
| 10 | | CUSHION (from JEM Bag 4)[Qty 3] | NASA CUSHION<br>80AS56834-105<br>80AS56834-106 | - | - | |
| 11 | | CUSHION (from TRAY-EPS1-4)[Qty 6] | 80AS56763-103<br>80AS56763-105<br>80AS56763-107<br>[Qty 2]<br>80AS56763-109<br>[Qty 2] | - | - | |

| **JLP-BAG 9 RTRVL** | |
|---|---|
| **2.109 JLP1FP1 BAG 9 RETRIEVAL**<br>**1.115 JEM RACK ROTATE** | |
| **Type: Standard** | IMS Plan: No |

| # | LOCATION | ITEM NAME | P/N | S/N | B/C | Notes |
|---|---|---|---|---|---|---|
| 1 | **NOD2D2**<br>1.0 CTB: MKAK,<br>S/N 1152,<br>B/C 004146J | 24” x 24” Ziplock Bag [QTY:2] | 528-21039-10 | - | - | **LABEL** Ziplock Bag “BDS Setup Part 1”.<br>**LABEL** Ziplock Bag “BDS Setup Part 2”. |
| 2 | **Crew Pref.** | Jettison Stowage Bag | SEB13100134-304 | - | - | This bag was unstowed during JEM STRAP RLCT on GMT 76/08 |
| **Type: Restow** | | | IMS Plan: No | | | |
| 3 | **JLP Temp Stow** | JEM Bag 9 | 80AS56740-123 | 001 | JBAG0009N | |
| 4 | | 24” x 24” Ziplock Bag “BDS Setup Part 1” | 528-21039-10 | - | - | |
| 5 | | BDS Cable 8 | 166-526979 | - | - | |
| 6 | | BDS Cable 12 | 166-526983 | - | - | |
| 7 | | BDC Cable 15 | 166-526986 | - | - | |
| 8 | | PDB-BU Cable Cover | 166-529743 | - | - | |
| 9 | | BUC Cable Cover | 166-529742 | - | - | |
| 10 | | 24” x 24” Ziplock Bag “BDS Setup Part 2” | 528-21039-10 | - | - | |
| 11 | | BDS Cable 9 | 166-526980 | - | - | |
| 12 | | BDS Cable 11 | 166-526982 | - | - | |
| 13 | **JLP Deployed**<br>Jettison Stowage Bag | CUSHION (from JEM Bag 9)[Qty 6] | 80AS56738-103<br>80AS56738-105<br>80AS56738-107<br>80AS56738-109<br>80AS56738-113<br>80AS56738-115 | - | - | Stage with other CUSHION for later disposal.<br><br>This bag was unstowed during JEM STRAP RLCT on GMT 76/08 |

37

1

| **JLP-JUMPR & CVR RTRVL** | | | | | | |
|---|---|---|---|---|---|---|
| **2.110 JUMPER AND COVER RETRIEVAL**<br>**1.115 JEM RACK ROTATE** | | | | | | |
| **Type: Standard** | | | IMS Plan: No | | | |
| # | LOCATION | ITEM NAME | P/N | S/N | B/C | Notes |

| | | | | | | |
|---|---|---|---|---|---|---|
| 1 | **NOD2D2**<br>1.0 CTB: MKAK,<br>S/N 1152,<br>B/C 004146J | 24”x24” Ziplock [QTY:4] | 528-21039-10 | - | - | **LABEL** Ziplock Bag “ICS 1553 I/F Cable”.<br>**LABEL** Ziplock Bag “JPM/JLP VOK 1 W3002, W3006, W3009”.<br>**LABEL** Ziplock Bag “JPM/JLP VOK 2 W3003, W3004, W3005”.<br>**LABEL** Ziplock Bag “JPM/JLP VOK 3 W3001, W3007, W3008, W3010”. |
| 2 | **JLP1S1 JRSR Front**<br>15” x 9” Ziplock<br>P/N: 528-50000-7, | 9”x15” Ziplock Bag | 528-50000-7 | - | - | **LABEL** Ziplock Bag “JLP Standoff Brackets for Vestibule & ICS Jumpers”. |
| 3 | **NOD2 Deployed**<br>Mesh Bag: VOK Tools | Sharpie | - | - | - | |
| 4 | | 1/8" Hex Head, 1/4" Drive | TMA4E | - | - | |
| 5 | | Ratchet, 1/4" Drive | TM830 | - | - | |
| **Type: Restow** | | | IMS Plan: No | | | |
| 6 | **JLP Ovhd Endcone** | 24”x24” Ziplock Bag “ICS 1553 I/F Cable” | 528-21039-10 | - | - | |
| 7 | | ICS 1553 I/F Cable 5A | S4899A | - | ICS1555AN | |
| 8 | | ICS 1553 I/F Cable 5B | S4901A | - | ICS1555BN | |
| 9 | | ICS 1553 I/F Cable 7A | S4898A | - | ICS1557AN | |
| 10 | | ICS 1553 I/F Cable 7B | S4900A | - | ICS1557BN | |
| 11 | **JLP Temp Stow** | JPM/JLP Vestibule Closeout | 80AS56704-101 | - | VBCR0001N | |
| 12 | **JLP Temp Stow** | 24”x24” Ziplock Bag “JPM/JLP VOK 1 W3002, W3006, W3009” | 528-21039-10 | - | - | |
| 13 | | JLP HCTL Power Jumper W3002 | 80A81064-111 | - | W3002001N | |
| 14 | | JLP Data Jumper W3006 | 80A81064-151 | - | W3006001N | |
| 15 | | JLP Data Jumper W3009 | 80A81064-181 | - | W3009001N | |
| 16 | | 24”x24” Ziplock Bag “JPM/JLP VOK 2 W3003, W3004, W3005” | 528-21039-10 | - | - | |
| 17 | | JLP Data Jumper W3003 | 80A81064-121 | - | W3003001N | |
| 18 | | JLP Data Jumper W3004 | 80A81064-131 | - | W3004001N | |
| 19 | | JLP Data Jumper W3005 | 80A81064-141 | - | W3005001N | |
| 20 | | 24”x24” Ziplock Bag “JPM/JLP VOK 3 W3001, W3007, W3008, W3010” | 528-21039-10 | - | - | |
| 21 | | JLP Power Jumper W3001 | 80A81064-101 | - | W3001001N | |
| 22 | | JLP 1553 Ch. A Jumper W3007 | 80A81064-161 | - | W3007001N | |
| 23 | | JLP 1553 Ch. B Jumper W3008 | 80A81064-171 | - | W3008001N | |

| | | | | | | |
|---|---|---|---|---|---|---|
| 24 | | JLP Data Jumper W3010 | 80A81064-191 | - | W3010001N | |
| 25 | **NOD2S5_D2** | ARS Jumper | 683-19485-4 | 001009 | ARSJ0001N | Keep jumpers stowed in foam container. |
| 26 | | IMV Jumper [QTY:2] | 683-15195-1 | 001<br>002 | IMVJ0001N<br>IMVJ0002N | |
| 27 | **NOD2 Deployed** 2.0 CTB: JEM Launch Support Equipment Bag S/N TBD, B/C TBD | 9”x15” Ziplock Bag “JLP Standoff Brackets for Vestibule & ICS Jumpers” | 528-50000-7 | - | - | |
| 28 | | Strap | 80AS56905-103 | - | - | |
| 29 | | Strap | 80AS56905-105 | - | - | |
| 30 | | Top Bracket [QTY:2] | 80A46245-151 | - | - | |
| 31 | | Middle Bracket [QTY:4] | 80A46245-161 [QTY:2]<br>80A46245-121 [QTY:2] | - | - | |
| 32 | | Bottom Bracket [QTY:2] | 80A46245-131 | - | - | |

| **JLP-PCBM CVR-RLCT** | | | | | | |
|---|---|---|---|---|---|---|
| **None** | | | | | | |
| **Type: Standard** | | | IMS Plan: No | | | |
| # | **LOCATION** | **ITEM NAME** | **P/N** | **S/N** | **B/C** | **Notes** |
| 1 | **NOD2D2** | JLP PCBM Thermal Cover [QTY 2] | 80A52164-101 | - | - | JLP PCBM Thermal Covers were removed during JLP VEST OUTFIT 1 on GMT 75. |
| 2 | | | 80A52165-111 | - | - | |
| 3 | **Temp stow after EVA 1** | JLP PCBM Contamination Covers [QTY 8] | 683-13603-1 [QTY 4] | - | - | JLP PCBM Contamination Covers were removed during EVA 1 on GMT 74. |
| 4 | | | 683-13603-5 [QTY 4] | - | - | |

**Tasklist Procedures:**

| **HRF RACK ACOUSTIC MOVE** | | | | | | |
|---|---|---|---|---|---|---|
| **2.026 HRF Rack Acoustic Closeout Placement and Drawer Modifications** | | | | | | |
| **Type: Standard** | | | **IMS Plan: No** | | | |
| # | **LOCATION** | **ITEM NAME** | **P/N** | **S/N** | **B/C** | **Notes** |
| 1 | **Crew Preference** | Cable Tie [6] | - | **-** | **-** | |
| 2 | **LAB1P4_J2** | HRF ISIS Holder | SDG46118532-301 | **-** | **-** | |
| 3 | **LAB1S2_C2** | HRF CSD Holder | SDG46118533-301 | **-** | **-** | |

| | | | | | | |
|---|---|---|---|---|---|---|
| 4 | **LAB1S2_K1** | HRF Rack Acoustic Closeout | SEG46118506-301 | - | - | |
| 5 | | HRF Workstation 2 Closeout | SEG46118506-303 | - | - | |

1

| **MELFI-VEL STRAP-RMV** | | | | | | |
|---|---|---|---|---|---|---|
| **4.008 MELFI REMOVAL OF VELCRO STRAPS FROM DEWARS** | | | | | | |
| **Type: Standard** | | | IMS Plan: No | | | |
| # | **LOCATION** | **ITEM NAME** | **P/N** | **S/N** | **B/C** | **Notes** |
| 1 | **Crew Preference** | 12 X 12 ziplock bag | - | - | - | |
| 2 | **LAB1O4_B1** | WHITE GLOVES | 03291-1 | any | any | |
| **Type: Restow** | | | IMS Plan: No | | | |
| 3 | **Dry Trash** | **Velcro straps** | - | - | - | |

2

| **MSG-BATTERY-REMOVE** | | | | | | |
|---|---|---|---|---|---|---|
| **4.036 MSG VIDEO RECORDER BATTERY REMOVAL** | | | | | | |
| **Type: Standard** | | | **IMS Plan: No** | | | |
| # | **LOCATION** | **ITEM NAME** | **P/N** | **S/N** | **B/C** | **Notes** |
| 1 | **NOD1O4_C1** | 6x6 Ziplock Bag [6] | - | - | - | |
| 2 | Ziplock Pantry (a.k.a. Large Ziplock) | 12x12 Ziplock Bag | - | - | - | |
| 3 | **COL1O4_C1** | MSG 8MM VIDEO RECORDER | 7009.80.AE | 01-474 | 00MSG003M | |
| 4 | 1.0 CTB Labeled MSG HARDWARE 2 S/N 1317 B/C 010653J | MSG DIGITAL VIDEO RECORDER | 7009.80.AD | 01-472 | 00MSG004M | |
| **Type: Restow** | | | **IMS Plan: No** | | | |
| 5 | **COL1O4_A1** 1.0 CTB MSG Hardware S/N 1323 B/C 010659J | 12x12 Ziplock Bag Labeled " VaLi Batteries Return to MSFC" | - | - | - | |
| 6 | | VaLi Batteries (6 Used) | - | - | - | |

3

| **TRQ-FSS-JMPR-QD** | | | | | | |
|---|---|---|---|---|---|---|
| **16-1060 QD TIGHTENING OF FSS JUMPERS** | | | | | | |
| **Type: Standard** | | | IMS Plan: No | | | |
| # | **LOCATION** | **ITEM NAME** | **P/N** | **S/N** | **B/C** | **Notes** |
| 1 | **LAB1O6** | FSS-64-2 Jumper | 683-17111-22 | 000001 | 00006441J | CWC M ADAPTER |
| 2 | 1.0 CTB: FSS, S/N 1136, B/C 004130J | FSS-68-1 Jumper | 683-17111-13 | 000001 | 00006442J | JUMPER ADAPTER-3/4M |
| 3 | | FSS-68-2 Jumper | 683-17111-14 | 000001 | 00006415J | |

| | | | | | | |
|---|---|---|---|---|---|---|
| 4 | | FSS-69-1 Jumper | 683-17111-15 | 000001 | 00006418J | JUMPER ADAPTER-3/4F |
| 5 | | FSS-69-2 Jumper | 683-17111-16 | 000001 | 00006443J | JUMPER ADAPTER-3/4F |
| 6 | | FSS-77-1 | 683-17111-17 | 000001 | 00012275J | |
| 7 | | FSS-77-2 | 683-17111-18 | 000001 | 00012274J | |

| **NOD2SD2-BBA-R&R** | | | | | | |
|---|---|---|---|---|---|---|
| **1.2.403 BASEPLATE BALLAST ASSEMBLY R&R** | | | | | | |
| **Type: Standard** | | | IMS Plan: No | | | |
| # | **LOCATION** | **ITEM NAME** | **P/N** | **S/N** | **B/C** | **Notes** |
| 1 | **LAB1O5_G** | Baseplate Ballast Assembly | 219011 | 127 | 00035238K | |
| **Type: Restow** | | | IMS Plan: No | | | |
| 2 | **LAB1O5_G** | Baseplate Ballast Assembly | 219011 | 73 | 00002617M | |

| **EHS-CO2-SDTO MON** | | | | | | |
|---|---|---|---|---|---|---|
| **16-0876 CARBON DIOXIDE MAPPING AND PERSONAL MONITORING** | | | | | | |
| **Type: Standard** | | | IMS Plan: No | | | |
| # | **LOCATION** | **ITEM NAME** | **P/N** | **S/N** | **B/C** | **Notes** |
| 1 | **LAB1S3** | CDM | SEG46117194-302 | 1013 | - | |
| 2 | **LAB1D4_A2** | CDMK | WLSD210121-301 | 1008 | 00057887J | |
| 3 | | Belt Pouch Assembly | WLSD210122-301 | - | - | |
| 4 | | CDMK Nomex Belt | WLSD210121-301 | - | - | |
| 5 | **LAB1D4_C2** | CSA-CP Data Cable | KLSD210045-801 | 1002 | - | Used to download data to MEC. |

# MD CEILING PORT 1
# BAG A

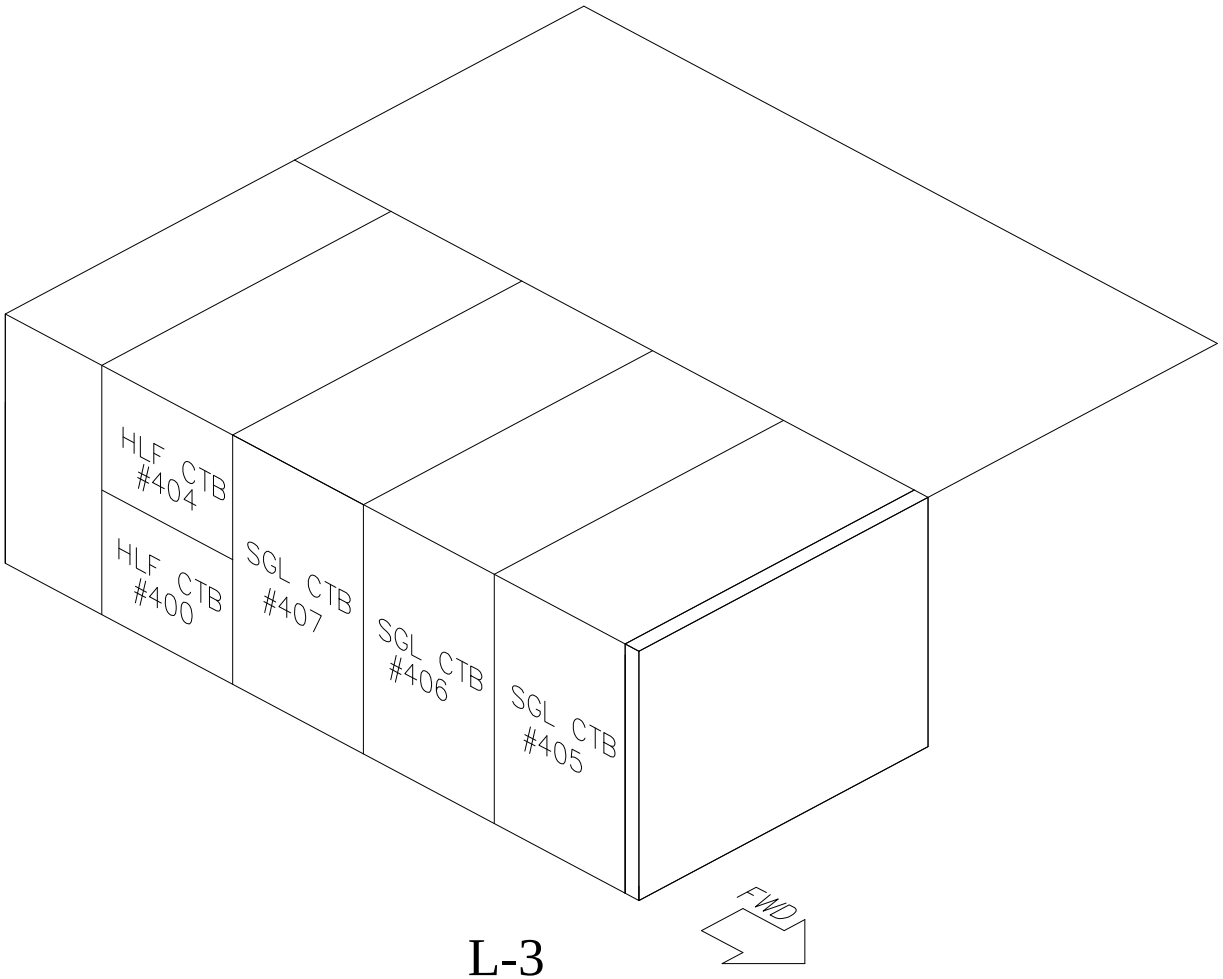


L-3

# MD CEILING PORT 2
# BAG D

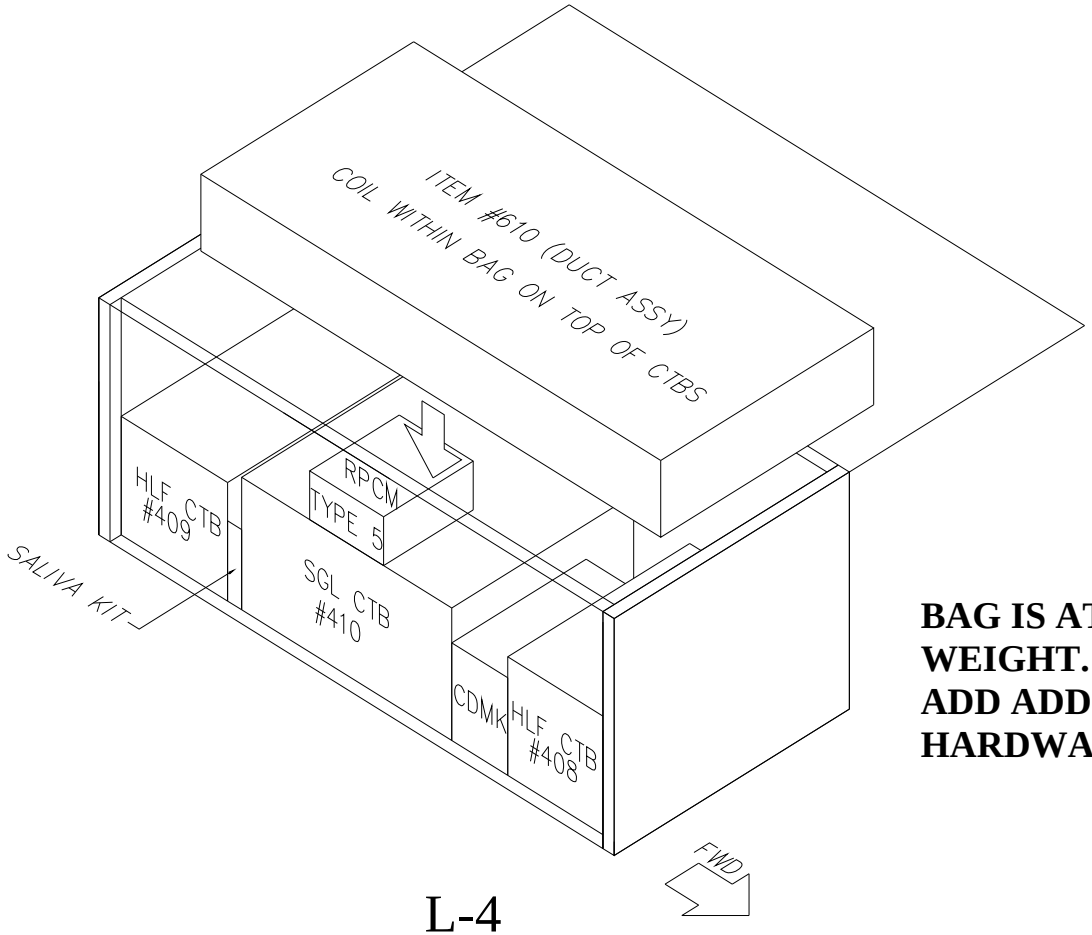


**BAG IS AT MAX WEIGHT. CANNOT ADD ADDITIONAL HARDWARE**

L-4

# MD CEILING STBD 1
## BAG G

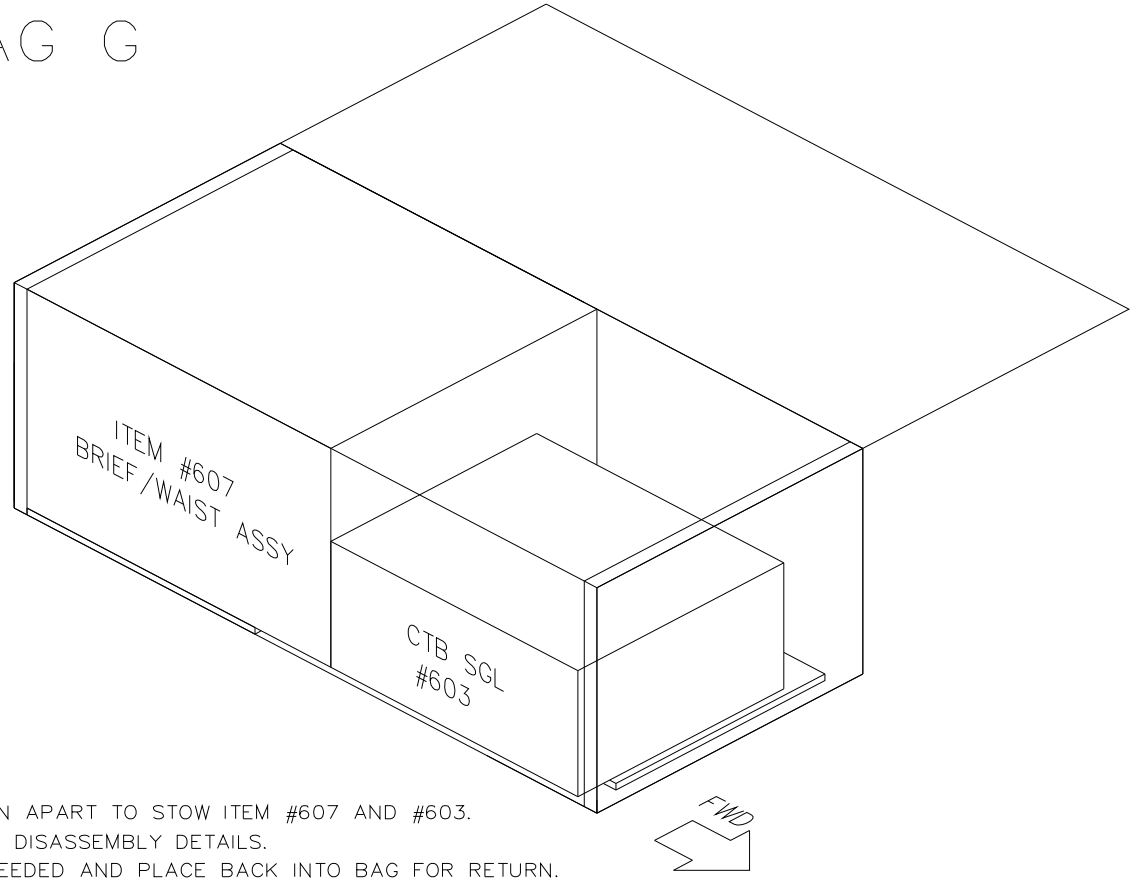


FOAM NEEDS TO BE TAKEN APART TO STOW ITEM #607 AND #603.
SEE FOLLOWING PAGE FOR DISASSEMBLY DETAILS.
RECONFIGURE FOAM AS NEEDED AND PLACE BACK INTO BAG FOR RETURN.

BAG IS AT MAX WEIGHT. CANNOT ADD ADDITIONAL HARDWARE.

BAG G FOAM
DISASSEMBLY

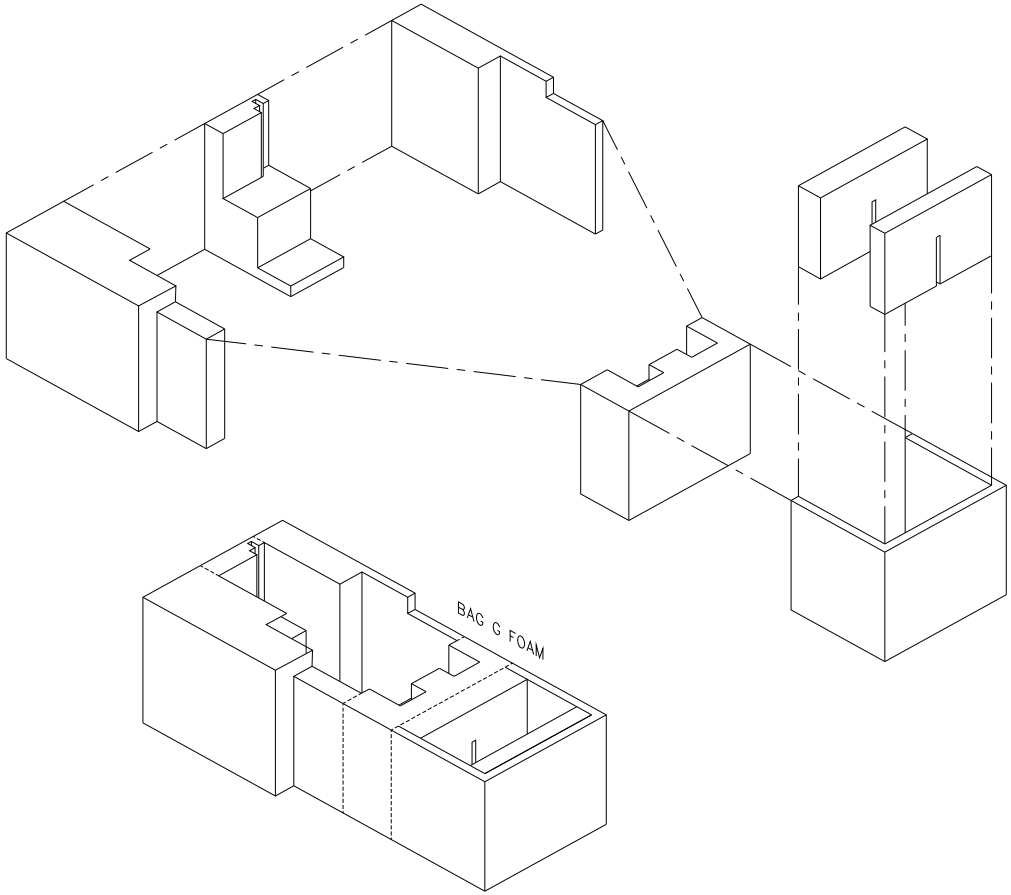


L-6

# MD CEILING STBD 2
# BAG H

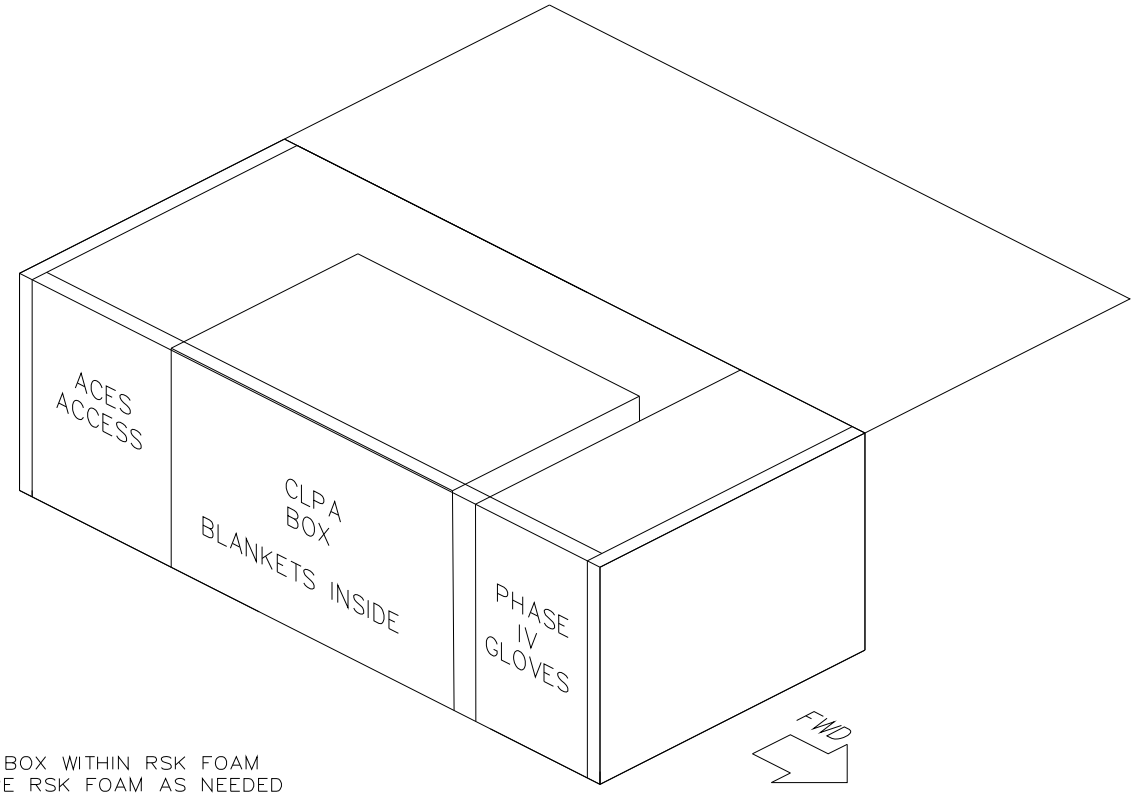


PLACE CLP BOX WITHIN RSK FOAM
RECONFIGURE RSK FOAM AS NEEDED

BAG IS AT MAX WEIGHT. CANNOT ADD ADDITIONAL HARDWARE.

# MD FLOOR PORT 2
# BAG E

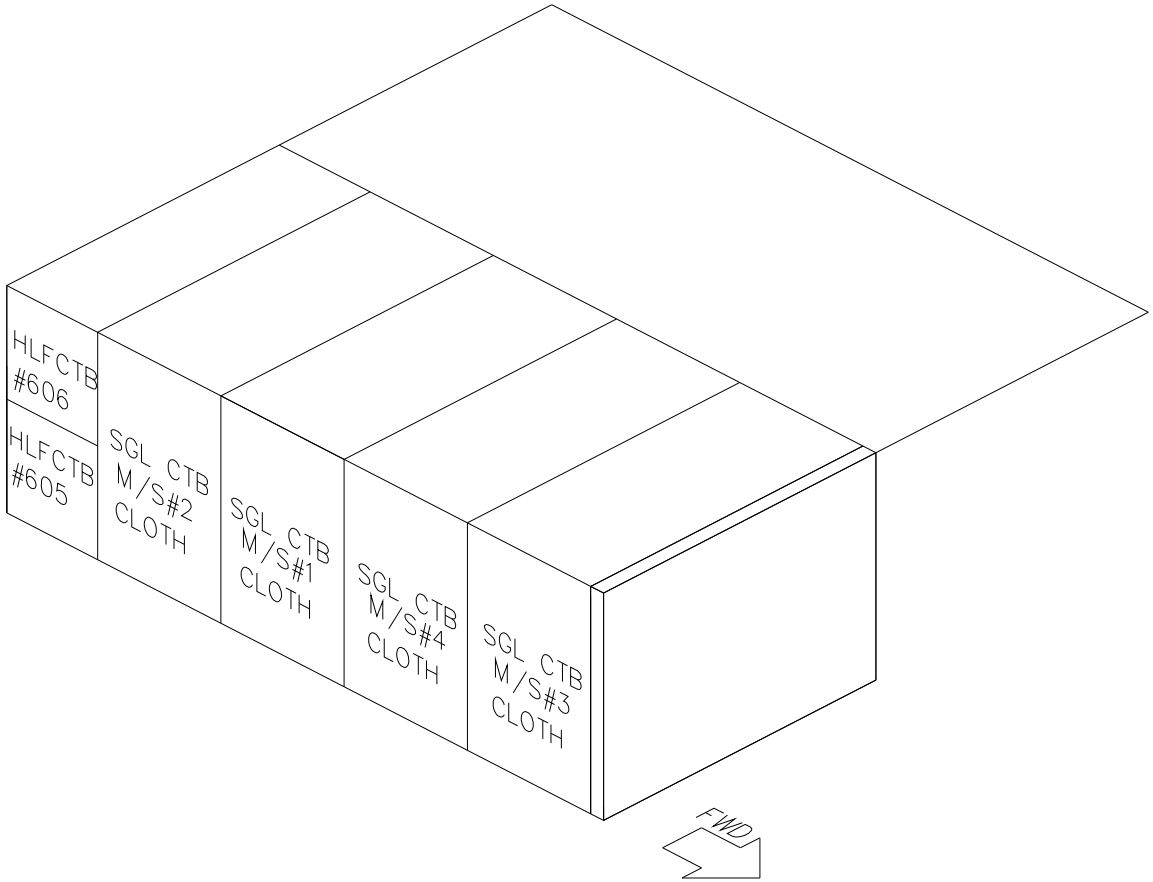


L-8

MD FLOOR PORT 1
BAG B

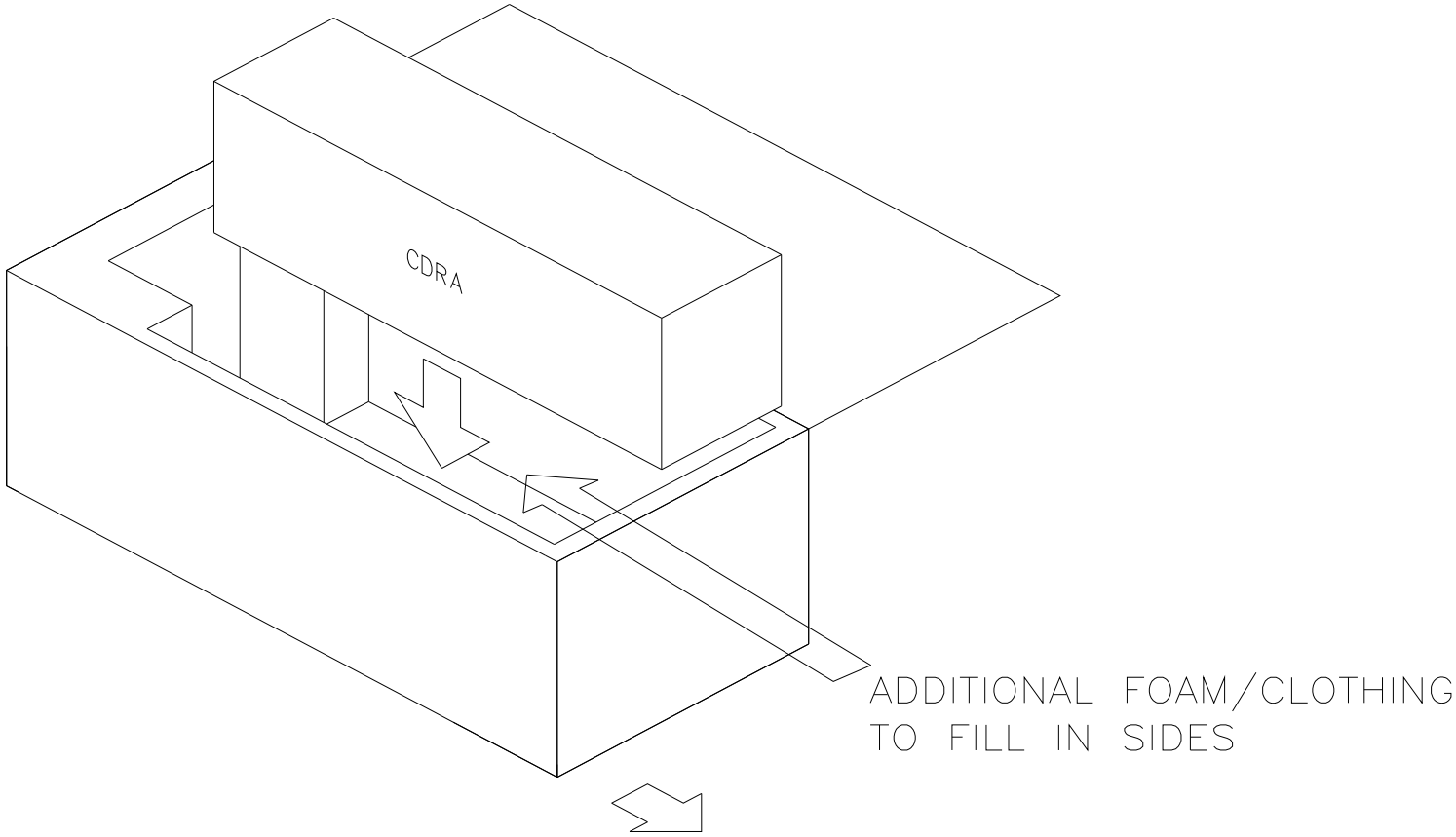


L-9