STS-122 / 1E

FD 05 Execute Package

MSG	Page(s)	Title
033	1 - 14	FD05 Flight Plan Revision **(pdf)**
034	15 - 16	FD05 Mission Summary **(pdf)**
035	17-19	FD04 MMT Summary **(pdf - Electronic Only)**
036A	20	FD05 Transfer Message **(pdf)**
037A	21 - 22	Bag G Return Config **(pdf)**
038	23 - 25	Bag A (BMRRM) Return Config **(pdf)**
039	26	Node 2 Starboard CBM Potential FOD **(pdf)**

Approved by FAO: *Jennifer Clevenger*

Last Updated: Feb 11 2008 8:40AM GMT
JEDI *(**J**oint **E**xecute package **D**evelopment and **I**ntegration), v2.04.0003*

MSG INDEX

MSG NO.	TITLE
033	FD05 Flight Plan Revision
034	FD05 Mission Summary (16-1011)
035	FD04 MMT Summary
036	FD05 Transfer Message (16-1012)
037	Bag G Return Config
038	Bag A (BMRRM) Return Config
039	Node 2 STBD CBM Potential FOD (16-1014)

1. Rex, Hans, Stan, Steve, and Dex,
   Good Luck on the EVA Today!

   As a reminder, ATU 6 in the Equipment Lock has failed and will not be used during this mission. ATU 4 should be used as the IV ATU. EMU hardline comm via the EACP and Y-cable will not be configured. Once the EV crewmembers are in the suits (specifically, at the FAN - ON step), the DCM Comm Mode should be taken to PRI to establish comm with IV. The EV crew will remain in RF mode (which will also make the EV crew hot mic to MCC-H) during all suited operations (Purge, Prebreathe, Depress, EVA, Repress, and Post EVA - through helmet doffing).

   Also, for Stan: You will need to reuse your EMU items (TCUs, etc...), so stow them accordingly in Post EVA. You may also want to take note of your moleskin configurations, in case you need more.

2. Peggy, Rex, Stan, Dex
   We have noticed some potential FOD in the Aft/Nadir region of the Starboard Node 2 CBM. Please reference MSG16-1014 (MSG039) for image of the potential FOD. In case CBM cleaning is required, we would like you to bring strips of Kapton tape out with you in the PDGF tools Crewlock bag. We have two options for transporting the tape to the worksite:

   Option A:
   1. Add 1 additional RET to an internal D-ring in the PDGF tools Crewlock bag
   2. Retrieve the Velcro/tape caddy that was transferred to ISS from shuttle. This Velcro/tape caddy is currently in NOD2 O2, 1.0 CTB S/N 1007. The Velcro/tape caddy in the Crewlock is older tape and should not be used for this task.
   3. Stow Velcro/tape caddy on RET in Crewlock bag

   Option B:
   Stow 4 kapton tape strips (3 layers each) on the door of the PDGF tools Crewlock bag. These strips should be configured in a manner similar to what is called out in MSG16-0457 (still onboard)

   If cleaning is required, perform the following steps:
   1. If required, remove overgloves
   2. Blot CBM surface with sticky side of tape until clean
   3. Fold tape sample in half (sticky side to sticky side); discard in small trash bag. Reminder: overgloves cannot be stowed in small trash bag after it is used for trash

3. To avoid losing data, please stop all PCMCIA cards or USB drives before removing them from the station's SSCs.

   Additionally, to prevent remapping of the drives which may affect PGSC batch files, please remove all USB drives from the PGSCs before inserting a PCMCIA card into the Shuttle PGSCs.

4. The table below lists crew exercise constraints for FD05:

Activity	Exercise Constraints	
	Shuttle	ISS
Columbus Install	No exercise from SSRMS Mnvr Unberth <2ft/5ft until at least 8 bolts (every other bolt) with CBM A-Bolts complete (except at the following positions: Low Hover, Clear Payload Bay, Pre-install, and Mated Columbus Grapple positions)	No exercise from SSRMS Mnvr Unberth <2ft/5ft until at least 8 bolts (every other bolt) with CBM A-Bolts complete (except at the following positions: Low Hover, Clear Payload Bay, Pre-install, and Mated Columbus Grapple positions)

5. REPLACE PAGES 2-14, 2-16, AND 3-44 THROUGH 3-53.

02/11/08 02:06:44 **REPLANNED**

FD05
GMT 02/11/08 (042)
MET Day 003

08 09 10 11 12 13 14 15 16 17 18 19 20 21 22 23 004/00
12 13 14 15 16 17 18 19 20 21 22 23

NO EXERCISE

STS-122	CDR FRICK	SLEEP; POST SLEEP; PMC A/G; POST SLEEP; HYG BRK/ HATCH CLS; CAMPOUT EVA PREP; EMU PURGE; EMU PREBREATHE; C_LK DPRS; EXERCISE; IMU; CWC INIT #6; MEAL; CWC TERM; CWC INIT #7; P/TV07 EVA SUPPORT; CWC TERM; CWC XFER (2); PRLA; PWR #1
STS-122	PLT POINDEXTER	SLEEP; POST SLEEP; MCIU*; INHIB; PAD; P/TV07 EVA S/U; EVA1 IVA SPPRT PREP; PDPS; EVA1 IVA SPPRT
STS-122	MS1 MELVIN	SLEEP; LOG; POST SLEEP; XFR UPDAT; XFER OPS; KU#; SSRMS PDGF SETUP; SSRMS PDGF INSTALL; SSRMS GRPL*; SSRMS COL UNBRTH
STS-122	MS2/EV1 WALHEIM	SLEEP; POST SLEEP; HYG BRK/ PREBREATHE (A/L REP, 10.2 DPRS); CAMPOUT EVA PREP; EMU PURGE; EMU PREBREATHE; C_LK DPRS; PDPS; C-LK; EGRS; PDGF SETUP; EVA 1 (06:30); PDGF INSTALL; P1 NTA RMVL PREP
STS-122	MS3/EV2 SCHLEGEL	SLEEP; LOG; POST SLEEP; EXERCISE; XFER$; KU#; PGSC^; EVA1 IVA SPPRT
STS-122	MS4/EV3 LOVE	SLEEP; POST SLEEP; HYG BRK/ PREBREATHE; CAMPOUT EVA PREP; EMU PURGE; EMU PREBREATHE; C_LK DPRS; PDPS; C-LK; EGRS; PDGF SETUP; PDGF INSTALL; P1 NTA RMVL PREP
DN	FE-2 TANI	SLEEP; POST SLEEP; PWN; WINDW; DPC; EXERCISE TVIS; CBCS; PWRUP; EXERCISE RED; SSRMS PDGF SETUP; PDGF; INSTL; ACBM; SSRMS PDGF INSTALL; SSRMS GRPL*; SSRMS COL UNBRTH
ISS	ISS CDR WHITSON	SLEEP; POST SLEEP; HYG BRK/ HATCH CLS; CAMPOUT EVA PREP; EMU PURGE; EMU PREBREATHE; C_LK DPRS; EXERCISE CEVIS; EXERCISE RED; MIDDAY-MEAL; WAICO; ACS-PPRV SP SEAL-R&R; VAJ S/U; WAICO
ISS	FE-1 MALENCHENKO	SLEEP; POST SLEEP; ЭЛЕКТ; ON; DPC; НАМ; CHARG; PWR PROP; CHK; PWR PROP; CHK; ЦП ПО LD; CHK; CLST; КАВ ФГС SMPL; МБИ-8-EXER-VELO-FE; ИП-1; MNT; MIDDAY-MEAL; РБО-3-1-RMV-XFER
UP	FE-2 EXP16 EYHARTS	SLEEP; POST SLEEP; PREP WORK; DPC; ADAPT; SSRMS PDGF SETUP; PDGF; INSTL; ACBM; SSRMS PDGF INSTALL; SSRMS GRPL*; SSRMS COL UNBRTH

DAY/NIGHT

ORBIT: 57 58 59 60 61 62 63 64

TDRS
W -171.0
E -46.0
Z -275.0

ORB ATT: BIAS -XLV -ZVV

NOTES
*FILTER CHECK
#STOW
$PCMCIA-SSC
^POWERDOWN

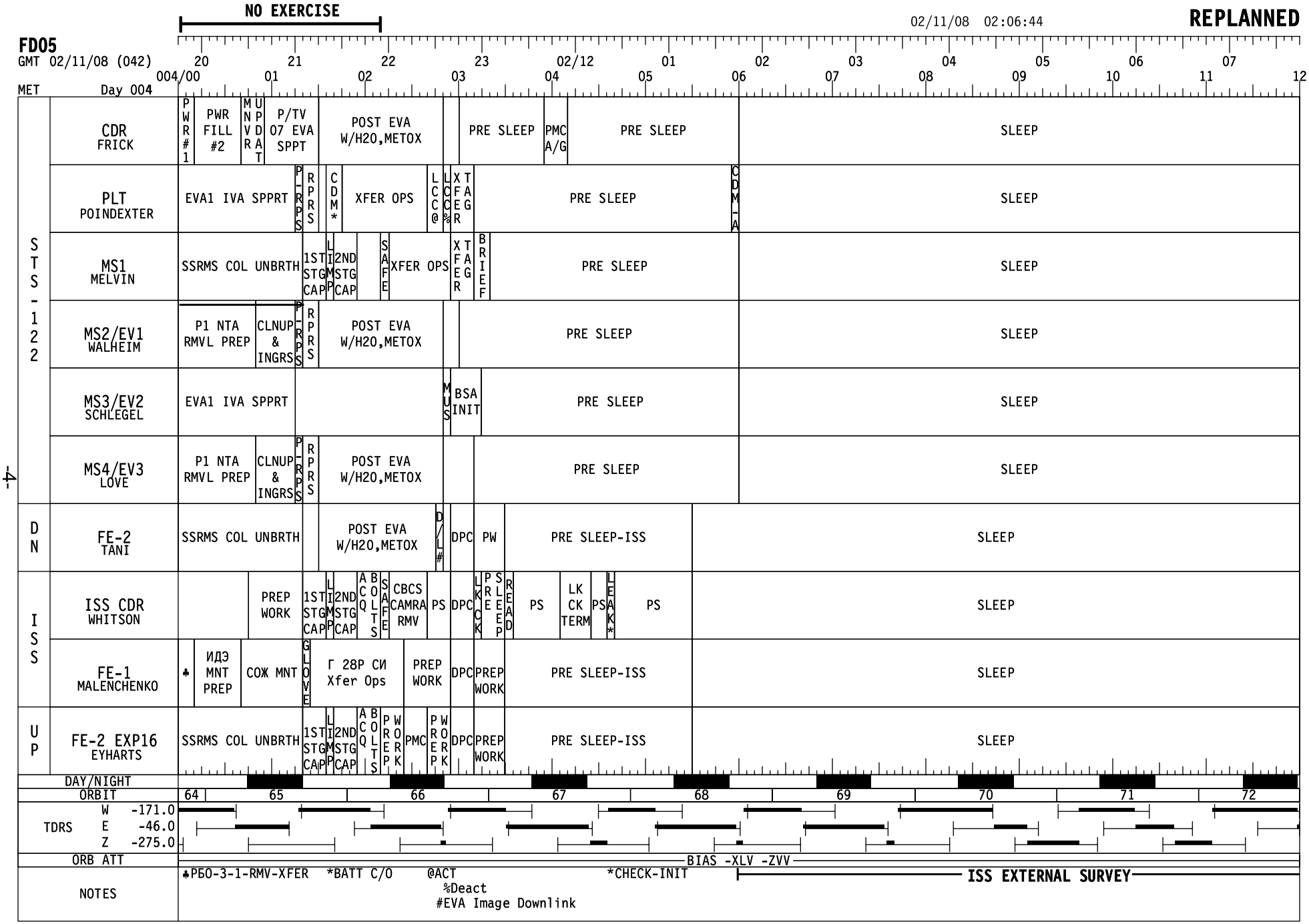
NO EXERCISE
02/11/08 02:06:44
REPLANNED
FD05
GMT 02/11/08 (042)
MET Day 004
20 21 22 23 02/12 01 02 03 04 05 06 07
004/00 01 02 03 04 05 06 07 08 09 10 11 12
STS-122
CDR FRICK
PWR #1
PWR FILL #2
MNVR
UPDAT
P/TV 07 EVA SPPT
POST EVA W/H2O,METOX
PRE SLEEP
PMC A/G
PRE SLEEP
SLEEP
PLT POINDEXTER
EVA1 IVA SPPRT
P-RPS
RPRS
CDM*
XFER OPS
LCC@
LCC%
XFER TAG
PRE SLEEP
CDM-A
SLEEP
MS1 MELVIN
SSRMS COL UNBRTH
1ST STG CAP
LIMP
2ND STG CAP
SAFE
XFER OPS
XFER TAG
BRIEF
PRE SLEEP
SLEEP
MS2/EV1 WALHEIM
P1 NTA RMVL PREP
CLNUP & INGRS
P-RPS
RPRS
POST EVA W/H2O,METOX
PRE SLEEP
SLEEP
MS3/EV2 SCHLEGEL
EVA1 IVA SPPRT
MUS
BSA INIT
PRE SLEEP
SLEEP
MS4/EV3 LOVE
P1 NTA RMVL PREP
CLNUP & INGRS
P-RPS
RPRS
POST EVA W/H2O,METOX
PRE SLEEP
SLEEP
DN
FE-2 TANI
SSRMS COL UNBRTH
POST EVA W/H2O,METOX
D/L#
DPC
PW
PRE SLEEP-ISS
SLEEP
ISS
ISS CDR WHITSON
PREP WORK
1ST STG CAP
LIMP
2ND STG CAP
ACQ BOLTS
SAFE
CBCS CAMRA RMV
PS
DPC
LKCK
PRE SLEEP
READ
PS
LK CK TERM
PS
LEAK*
PS
SLEEP
FE-1 MALENCHENKO
♣
ИДЭ MNT PREP
СОЖ MNT
GLOVE
Г 28Р СИ Xfer Ops
PREP WORK
DPC
PREP WORK
PRE SLEEP-ISS
SLEEP
UP
FE-2 EXP16 EYHARTS
SSRMS COL UNBRTH
1ST STG CAP
LIMP
2ND STG CAP
ACQ BOLTS
PREP WORK
PMC
PREP WORK
DPC
PREP WORK
PRE SLEEP-ISS
SLEEP
DAY/NIGHT
ORBIT
64 65 66 67 68 69 70 71 72
TDRS
W -171.0
E -46.0
Z -275.0
ORB ATT
BIAS -XLV -ZVV
NOTES
♣РБО-3-1-RMV-XFER
*BATT C/O
@ACT
%Deact
#EVA Image Downlink
*CHECK-INIT
ISS EXTERNAL SURVEY

STS-122 FD (05)

GMT Date 02/11 (042) | W | TDRSE | Z | DORB | ORB | MET Day 003 | STS ATT | CDR FRICK | PLT POINDEXTER | MS1 MELVIN | NOTES

12:00

08:00

09:00

10:00

11:00

13:00

14:00

15:00

16:00

15 57

16 58

1 59

BIAS-XLV-ZVV

SLEEP

SLEEP

SLEEP

FD05 EZ ACTIVITIES:
OCAC FILTER INSPECTION
HARD REBOOT ALL PGSCs
After Ku Deploy, Verify Late Update Cards from SSC have been returned to Shuttle.

POST-SLEEP ACTIVITY (ORB OPS, CREW SYS)

POST-SLEEP ACTIVITY (ORB OPS, CREW SYS)

FLIGHT SLEEP LOG (ORB OPS, SDBI)

POST-SLEEP ACTIVITY (ORB OPS, CREW SYS)

PRIVATE MEDICAL CONFERENCE
Perform via A/G2

POST-SLEEP ACTIVITY (ORB OPS, CREW SYS)

EVA SYSTEMS: 2.315 HYGIENE BREAK
Steps 21-29, MCC-H will perform step 23

EVA SYSTEMS: 2.320 10.2 PSIA
CAMPOUT EVA PREP

STS-122 FD (05)

GMT Date 02/11 (042) | W | TDRSE | Z | DORB | ORB | MET Day 003 | STS ATT | MS2 WALHEIM | MS3 SCHLEGEL | MS4 LOVE | NOTES

08:00 09:00 10:00 11:00

12:00 13:00 14:00 15:00 16:00

15 57 16 58 1 59

BIAS-XLV-ZVV

MS2 WALHEIM	MS3 SCHLEGEL	MS4 LOVE
SLEEP	SLEEP	SLEEP
POST-SLEEP ACTIVITY (ORB OPS, CREW SYS)	FLIGHT SLEEP LOG (ORB OPS, SDBI) POST-SLEEP ACTIVITY (ORB OPS, CREW SYS)	POST-SLEEP ACTIVITY (ORB OPS, CREW SYS)
EVA SYSTEMS: 2.315 HYGIENE BREAK MCC-H will perform steps 1 - 4, 16 - 20 and 23		EVA SYSTEMS: 2.315 HYGIENE BREAK MCC-H will perform steps 1 - 4, 16 - 20 and 23
EVA SYSTEMS: 2.320 10.2 PSIA CAMPOUT EVA PREP		EVA SYSTEMS: 2.320 10.2 PSIA CAMPOUT EVA PREP

-6-

STS-122 FD (05)

GMT Date 02/11 (042) | W | TDRSE | Z | DORB | ORB | MET Day 003 | STS ATT

CDR FRICK	PLT POINDEXTER	MS1 MELVIN	NOTES
EVA SYSTEMS: 2.320 10.2 PSIA CAMPOUT EVA PREP	POST-SLEEP ACTIVITY (ORB OPS, CREW SYS)	POST-SLEEP ACTIVITY (ORB OPS, CREW SYS)	
		DAILY TRANSFER LIST UPDATE Ref. Transfer List & MSG 036	
	L17 Check MCIU filter screen EVA INHIBIT PAD (EVA, TIMELINES)	TRANSFER OPS Ref. Transfer List & MSG 037 Bag G Return Config	
EVA SYSTEMS: 1.220 EMU PURGE	P/TV07 EVA (PHOTO/TV, SCENES) Setup R12 (VPU): Green Jumper - LDRI/ITVC		
EVA SYSTEMS: 1.225 EMU PREBREATHE			
EVA SYSTEMS: CREWLOCK DEPRESS (CC)	IVA SUPPORT PREP	KU-BD ANT STOW (ORB OPS, COMM/INST)	
	EVA SYSTEMS: CREWLOCK POST DEPRESS (CC)	ROBOTICS: 1.210 EVA1-PDGF RETRIEVE	
EXERCISE	IVA SUPPORT EVA1		
IMU ALIGN - S TRK (ORB OPS, GNC)			

Time scale: 12:00, 13:00, 14:00, 15:00; 16:00, 17:00, 18:00, 19:00, 20:00

BIAS - XLV - ZVV

-7-

STS-122 FD (05)

GMT Date 02/11 (042) | W | TDRSE | Z | DORB | ORB | MET Day 003 | STS ATT | MS2 WALHEIM | MS3 SCHLEGEL | MS4 LOVE | NOTES

12:00 13:00 14:00 15:00

16:00 17:00 18:00 19:00 20:00

1 5 9 | 2 6 0 | 3 6 1 | 4 6 2

BIAS - XLV - ZVV

MS2 WALHEIM

EVA SYSTEMS: 2.320 10.2 PSIA
CAMPOUT EVA PREP

EVA SYSTEMS: 1.220 EMU PURGE

EVA SYSTEMS: 1.225 EMU PREBREATHE

EVA SYSTEMS: CREWLOCK DEPRESS (CC)

EVA SYSTEMS: CREWLOCK POST DEPRESS (CC)

EVA SYSTEMS: CREWLOCK EGRESS (CC)

PDGF SETUP

MS3 SCHLEGEL

POST-SLEEP ACTIVITY
(ORB OPS, CREW SYS)

EXERCISE

FILE SNEAKERNET BETWEEN ISS SSC & SHUTTLE PGSC
(ORB OPS, PGSC) Part A, Steps 1-3

KU-BD ANT STOW
(ORB OPS, COMM/INST)

PGSC POWERDOWN PWRDN all unnecess PGSCs.
At a minimum, leave KFX, RPOP,
& Color Printer on

IVA SUPPORT EVA1

MS4 LOVE

EVA SYSTEMS: 2.320 10.2 PSIA
CAMPOUT EVA PREP

EVA SYSTEMS: 1.220 EMU PURGE

EVA SYSTEMS: 1.225 EMU PREBREATHE

EVA SYSTEMS: CREWLOCK DEPRESS (CC)

EVA SYSTEMS: CREWLOCK POST DEPRESS (CC)

EVA SYSTEMS: CREWLOCK EGRESS (CC)

PDGF SETUP

STS-122 FD (05)

GMT Date 02/11 (042) | W | TDRSE | Z | DORB | ORB | MET Day 003 | STS ATT

CDR FRICK	PLT POINDEXTER	MS1 MELVIN	NOTES
SHUTTLE/ISS H2O CNTR FILL (ORB OPS, ECLS)INIT FILL #6 Ref. MSG 005, Fill Dur ~52 min		ROBOTICS: 1.210 EVA1-PDGF RETRIEVE	
MEAL		ROBOTICS: 1.211 PDGF INSTALL	
SHUTTLE/ISS H2O CNTR FILL (ORB OPS, ECLS) Perform FILL TERM			
SHUTTLE/ISS H2O CNTR FILL (ORB OPS, ECLS)INIT FILL #7 Ref. MSG 005, Fill Dur ~52 min			
P/TV07 EVA (PHOTO/TV, SCENES) P/TV SUPPORT SSRMS Config Shuttle Cameras per ROBO 1.310 & 1.311	IVA SUPPORT EVA1		
SHUTTLE/ISS H2O CNTR FILL (ORB OPS, ECLS) Perform FILL TERMINATION			
CWC TRANSFER Transfer 2 CWCs to ISS		ROBOTICS: 1.310 COLUMBUS GRAPPLE	
ROBOTICS: 1.311 COLUMBUS INSTALL PRLA Release, Step 5		ROBOTICS: 1.311 COLUMBUS INSTALL Columbus Unberth, Steps 1-12	NO EXERCISE DURING COL UNBERTH & CBM OPERATIONS
PWR FILL (ORB OPS, ECLS) Perform Water Fill #1 Ref. MSG 005			

Time scale: 16:00, 17:00, 18:00, 19:00; Day 003: 20:00, 21:00, 22:00, 23:00, 00:00

STS ATT: BIAS-XLV-ZVV

DORB: 4, 5, 6; ORB: 62, 63, 64

-9-

STS-122 FD (05)

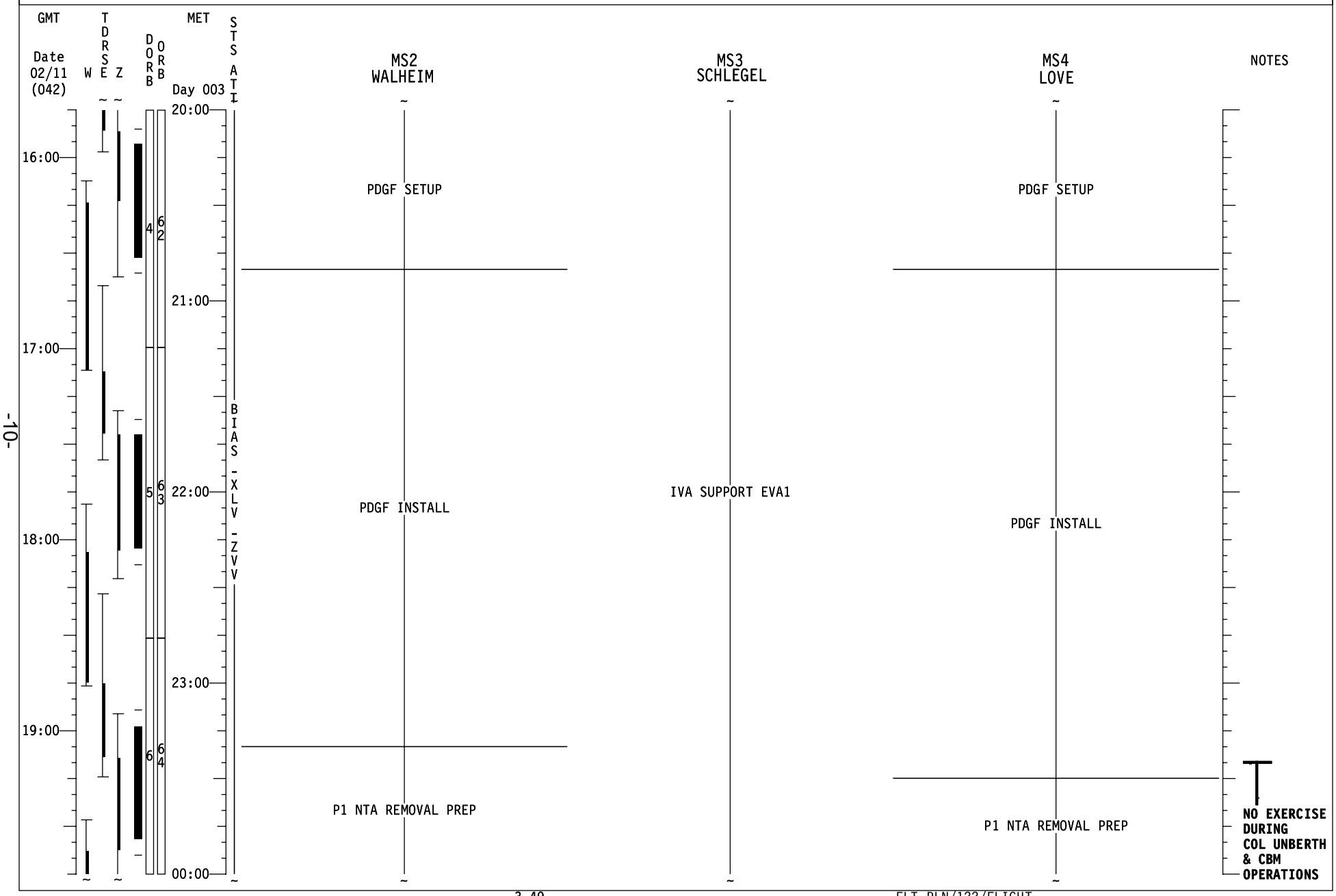
GMT
Date 02/11 (042)
W
TDRSE
Z
DORB 4 5 6
ORB 62 63 64
MET
Day 003
STS ATI
BIAS -XLV -ZVV
16:00
17:00
18:00
19:00
20:00
21:00
22:00
23:00
00:00
MS2 WALHEIM
PDGF SETUP
PDGF INSTALL
P1 NTA REMOVAL PREP
MS3 SCHLEGEL
IVA SUPPORT EVA1
MS4 LOVE
PDGF SETUP
PDGF INSTALL
P1 NTA REMOVAL PREP
NOTES
NO EXERCISE DURING COL UNBERTH & CBM OPERATIONS

STS-122 FD (05)

GMT Date 02/11 (042) | W | TDRSE | Z | DORB | ORB | MET Day 004 | STS ATT

CDR FRICK	PLT POINDEXTER	MS1 MELVIN	NOTES
PWR FILL (ORB OPS, ECLS) Perform Water Fill #1 Ref. MSG 005		ROBOTICS: 1.311 COLUMBUS INSTALL Columbus Unberth, Steps 1-12	NO EXERCISE DURING COL UNBERTH & CBM OPERATIONS
PWR FILL (ORB OPS, ECLS) Perform Water Fill #2 Ref. MSG 005			
MNVR (TRK) UPDATE (Post Columbus Install) TG=2 BV=5 P=161 Y=354 OM=192 A12/FREE/VERN Init TRK	IVA SUPPORT EVA1		
P/TV07 EVA (PHOTO/TV, SCENES) P/TV SUPPORT SSRMS Config Shuttle Cameras per ROBO 1.311			
	EVA SYSTEMS: PRE REPRESS (CC) EVA SYSTEMS: CREWLOCK REPRESS (CC)	S&M: 1.512 NODE 2 CBM CAPTURE/ABOLT First Stage Capture, Steps 1-4	
EVA SYSTEMS: 1.240 POST EVA With H2O With METOX Steps 37 & 67 not req'd In step 61, stow batts in BSA per Battery Recharge CC Ref: STS-122 CONSUMABLES TRACKING CC (EVA) Ref: POST EVA GLOVE PHOTOS (EVA, MAINT/RCHRG)	CDM SETUP AND BATTERY CHANGEOUT (ORB OPS, CDM DTO) Location 3 TRANSFER OPS Ref. Transfer List & MSG 038 Bag A (BMRRM) Return Config	ROBOTICS: 1.311 COLUMBUS INSTALL Limp,St 13 S&M: 1.512 NODE 2 CBM CAPTURE/ABOLT Second Stage Capture, Step 5	
		ROBOTICS: 1.311 COLUMBUS INSTALL Safe,St 14-15 TRANSFER OPS Ref. Transfer List & MSG 038 Bag A (BMRRM) Return Config	
	LCC ACTIVATION (PHOTO/TV, CUE CARDS)Steps 1,2 LCC DEACTIVATION(PHOTO/TV,CUE CARDS)Step 1		
PRE-SLEEP ACTIVITY (ORB OPS, CREW SYS)	TRANSFER TAGUP Coordinate with xfer counterpart	TRANSFER TAGUP Coordinate with xfer counterpart	
	PRE-SLEEP ACTIVITY (ORB OPS, CREW SYS)	TRANSFER BRIEF Call down status to MCC	
		PRE-SLEEP ACTIVITY (ORB OPS, CREW SYS)	
PRIVATE MEDICAL CONFERENCE Perform via A/G2			

Time scale: 20:00, 21:00, 22:00, 23:00; 00:00, 01:00, 02:00, 03:00, 04:00

BIAS - XLV - ZVV

DORB: 6, 7, 8, 9; ORB: 64, 65, 66, 67

STS-122 FD (05)

GMT Date 02/11 (042) | W | TDRSE | Z | DORB | ORB | MET Day 004 | STS ATT

MS2 WALHEIM | MS3 SCHLEGEL | MS4 LOVE | NOTES

00:00 | 01:00 | 02:00 | 03:00 | 04:00

20:00 | 21:00 | 22:00 | 23:00

6 | 64 | 7 | 65 | 8 | 66 | 9 | 67

BIAS - XLV - ZVV

P1 NTA REMOVAL PREP

IVA SUPPORT EVA1

P1 NTA REMOVAL PREP

NO EXERCISE DURING COL UNBERTH & CBM OPERATIONS

CLEANUP AND INGRESS

CLEANUP AND INGRESS

EVA SYSTEMS: PRE REPRESS (CC)

EVA SYSTEMS: CREWLOCK REPRESS (CC)

EVA SYSTEMS: 1.240 POST EVA
With H2O
With METOX
Steps 37 & 67 not req'd
In step 61, stow batts in
BSA per Battery Recharge CC

Ref: STS-122 CONSUMABLES TRACKING CC (EVA)

Ref: POST EVA GLOVE PHOTOS (EVA, MAINT/RCHRG)

EVA SYSTEMS: PRE REPRESS (CC)

EVA SYSTEMS: CREWLOCK REPRESS (CC)

EVA SYSTEMS: 1.240 POST EVA
With H2O
With METOX
Steps 37 & 67 not req'd
In step 61, stow batts in
BSA per Battery Recharge CC

Ref: STS-122 CONSUMABLES TRACKING CC (EVA)

Ref: POST EVA GLOVE PHOTOS (EVA, MAINT/RCHRG)

PRE-SLEEP ACTIVITY (ORB OPS, CREW SYS)

LBP-MUSCLE QSTION(ASSY PL, QSTION)

EVA SYSTEMS: 1.605 BSA BATTERY RECHARGE Perform INITIATE
Ref: STS-122 CONSUMABLES TRACKING CC (EVA)
Ref: STS-122 BATTERY RECHARGE CC

PRE-SLEEP ACTIVITY (ORB OPS, CREW SYS)

PRE-SLEEP ACTIVITY (ORB OPS, CREW SYS)

STS-122 FD (05)

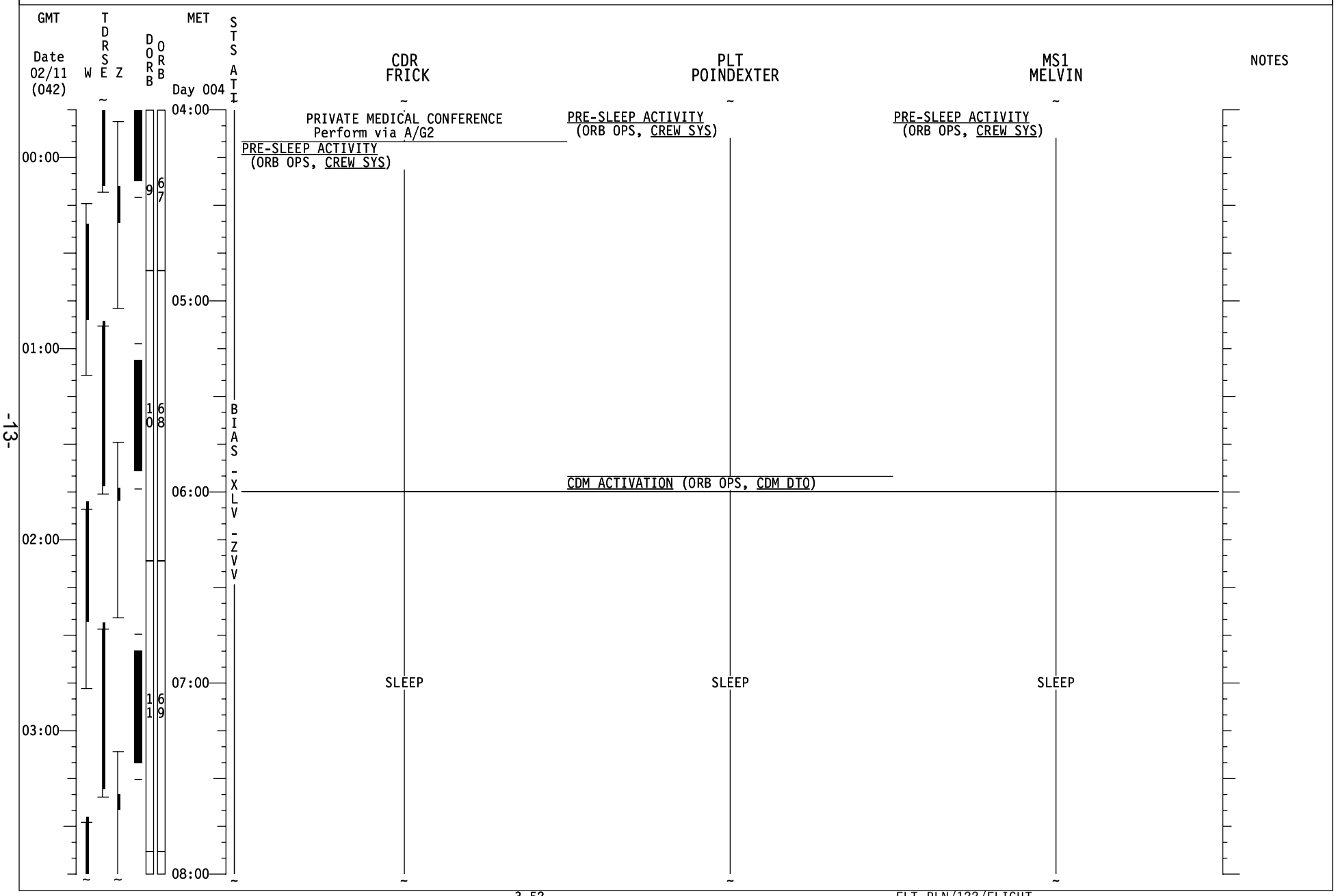
GMT
Date 02/11 (042)
W
TDRSE
Z
DORB
ORB
MET
Day 004
STS ATT
CDR FRICK
PLT POINDEXTER
MS1 MELVIN
NOTES
00:00
01:00
02:00
03:00
04:00
05:00
06:00
07:00
08:00
9 6 7
1 6 0 8
1 6 1 9
BIAS - XLV - ZVV
PRIVATE MEDICAL CONFERENCE
Perform via A/G2
PRE-SLEEP ACTIVITY
(ORB OPS, CREW SYS)
PRE-SLEEP ACTIVITY
(ORB OPS, CREW SYS)
PRE-SLEEP ACTIVITY
(ORB OPS, CREW SYS)
CDM ACTIVATION (ORB OPS, CDM DTO)
SLEEP
SLEEP
SLEEP

STS-122 FD (05)

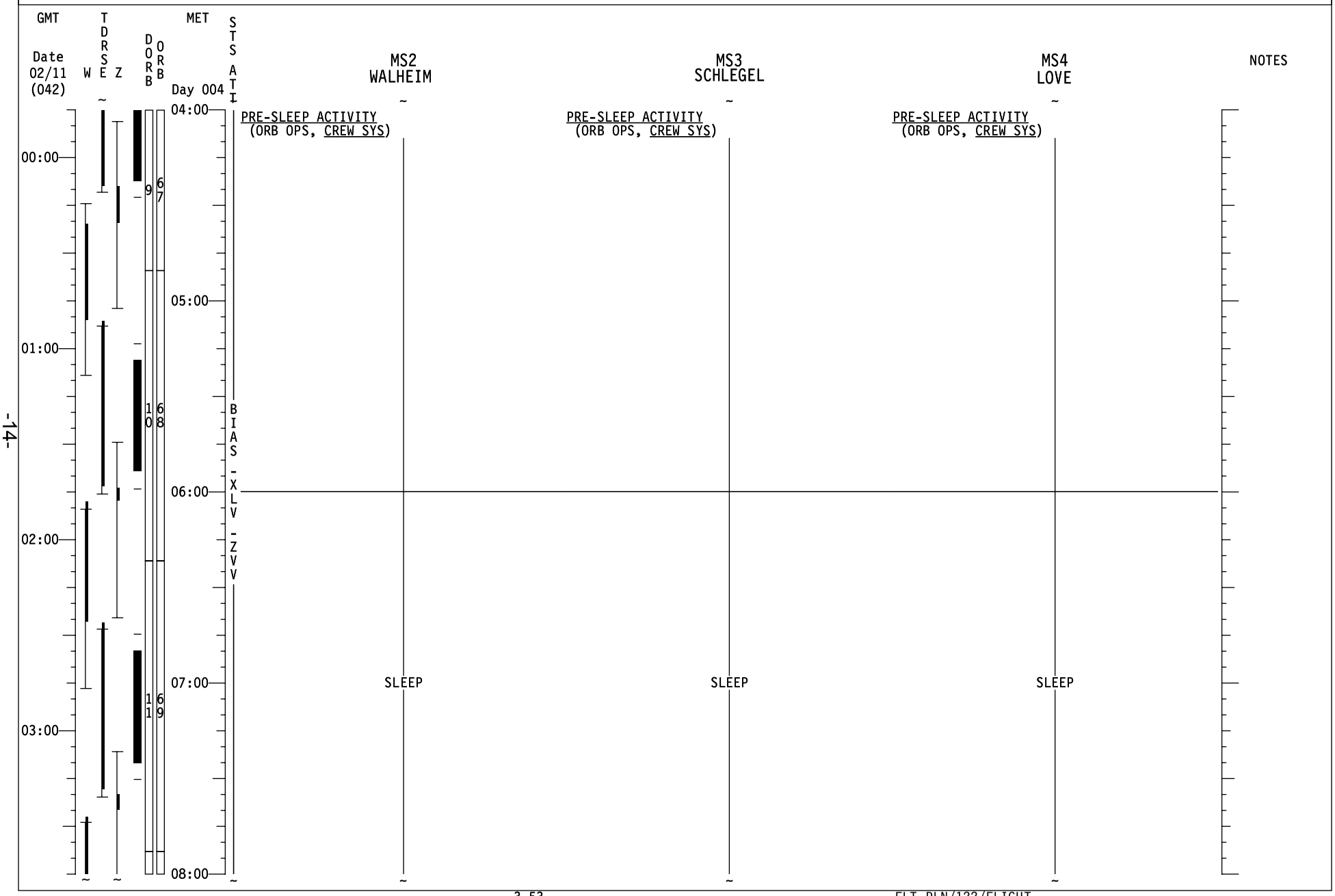
GMT
Date 02/11 (042)
W
TDRSE
Z
DORB
ORB
MET
Day 004
STS ATT
BIAS -XLV -ZVV
MS2 WALHEIM
MS3 SCHLEGEL
MS4 LOVE
NOTES
00:00
01:00
02:00
03:00
04:00
05:00
06:00
07:00
08:00
9
10
11
67
68
69
PRE-SLEEP ACTIVITY (ORB OPS, CREW SYS)
SLEEP

Good Morning Atlantis!!!!

Thanks for the great work you did with the focused inspection yesterday!

Have a great day installing Columbus!

YOUR CURRENT ORBIT IS: 185 X 176 NM

NOTAMS:

EDW – LAKEBED RUNWAYS RED.
NOR – LAKEBED RUNWAYS GREEN.
NKT – RWYS 05L/23R + 14L/32R NOT USABLE.
HAW – RWY 31 CLOSED; RWY 13 TODA 8,994'.
WAK – NOT USABLE.
IKF – NOT USABLE.
DIW – TACAN OTS.
LAJ – TACAN CH 45 OTS.
NGU – TACAN CHANNEL CHANGED TO CH 22.
BEN – POLITICALLY NOT RECOMMENDED/NOT SUPPORTED.
DOV – 14/32 CLOSED.
ZZA – FIRST 600M (~2,000') OF RWY 30L NOT AVAILABLE. 10,200' REMAINING.
GUA – TACAN OTS 2230 - 0330Z 10 FEB - 12 FEB.

NEXT 2 PLS OPPORTUNITIES:

NOR17 ORB 64 – 3/23:38 (SCT250 180/5P8)
EDW04 ORB 80 – 4/23:57 (SKC 070/6P9)

OMS TANK FAIL CAPABILITY:

L OMS FAIL: NO R OMS FAIL: NO

LEAKING OMS PRPLT BURN:

L OMS LEAK: ALWAYS BURN RETROGRADE
R OMS LEAK: ALWAYS BURN RETROGRADE

OMS QUANTITIES(%)

L OMS OX = 35.0 R OMS OX = 35.4
FU = 35.3 FU = 35.2

SUBTRACT ICNCT COUNTER FOR CURRENT OMS QUANTITIES

DELTA V AVAILABLE:

OMS	361 FPS
ARCS (TOTAL ABOVE QTY1)	45 FPS
TOTAL IN THE AFT	406 FPS
ARCS (TOTAL ABOVE QTY2)	78 FPS
FRCS (ABOVE QTY 1)	25 FPS
AFT QTY 1	80 %
AFT QTY 2	42 %

THERE ARE NO FAILURE/IMPACT/WORK AROUNDS FOR TODAY.

FD04 MMT Summary

The MMT met to discuss mission progress and review FD2/RPM inspection results. The RCC and bottom of the orbiter was officially cleared for entry. With the ROMS pod blanket focused inspection in work at the time of the MMT, the team did not discuss this TPS item. The ROMS pod blanket and three other TPS issues will be reviewed by the MMT tomorrow. Currently, the TPS is considered “Degraded”, but acceptable for entry with no impacts to entry operations. Also, the MMT approved the addition of one extra docked day with the decision to add a 2nd docked day deferred until FD06.

Orbiter Status: The orbiter systems continue to perform well with no new anomalies being tracked. The intermittent SSOR#1 may require some further troubleshooting as time permits. For the HHL data problem, additions to the FD08 RNDZ Tools C/O are being discussed. Finally, GPC 3 is freeze dried, but ready for use as required with no constraints.

Ascent Imagery - All of the available ascent imagery has been reviewed. No additional items have been identified. The ET umbilical well pictures and SRB video should be available tomorrow for review.

ET Umbilical Doors - The RPM imagery clearly confirm that the ET umbilical doors are fully closed and latched (Figure 1).

Damage Assessment Team - The RCC team reviewed 583 Regions of Interest, and the RCC is fully cleared for entry. The RPM photos of the orbiter bottom have been fully reviewed, and the orbiter bottom is fully cleared for entry (Figure 2). There were a few tile dings across the underside of the vehicle, but all were analyzed and none are a concern for entry. On the upper surface, several items are still being reviewed: ROMS blanket, several tile damage sites above Window #3 and #4 (Figure 3 & 4), and the missing LOMS stinger tile. Pending the findings of the Focused Inspection, all of these items should be addressed by tomorrow’s MMT.

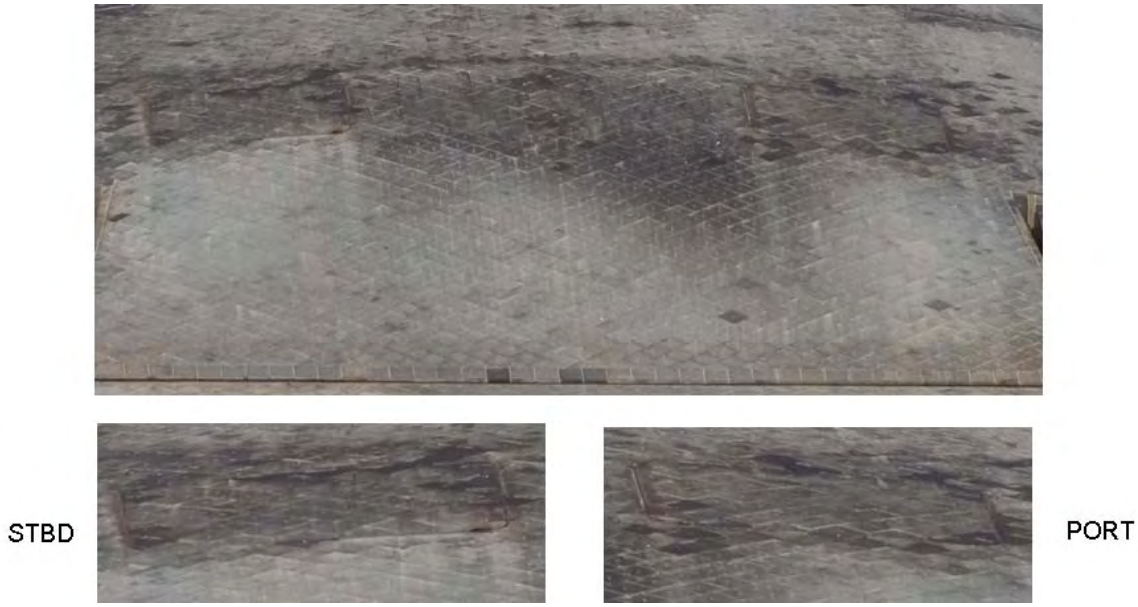

Figure 1 - ET Doors confirmed closed and latched

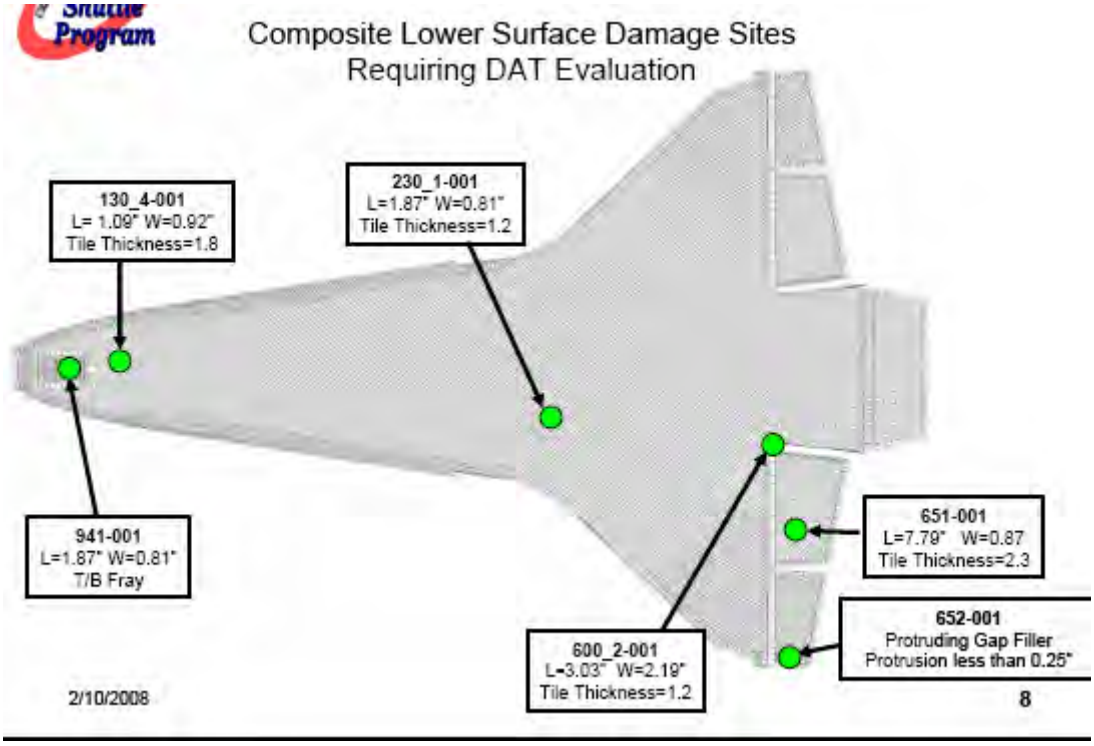

Figure 2 - Lower Surface Damage Sites Reviewed

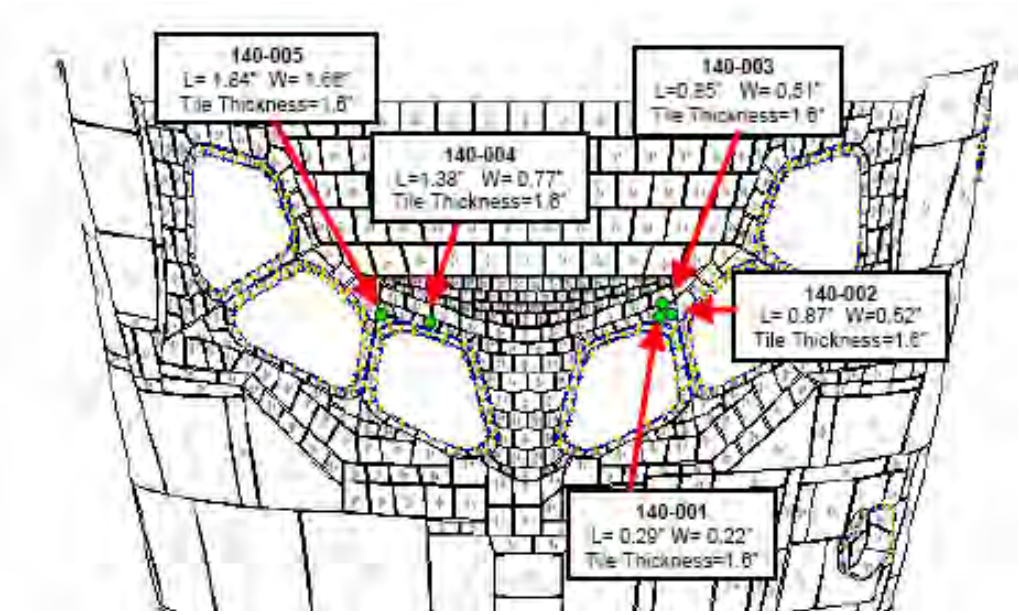

Figure 3 - Forward Window Tile Damage Sites under evaluation

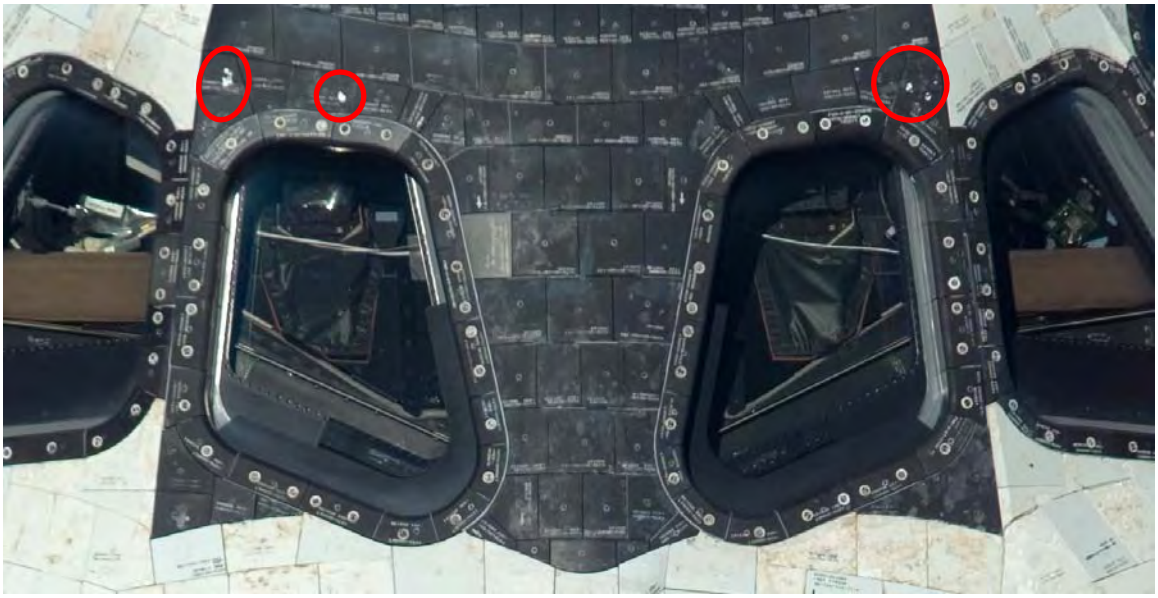

Figure 4 - Forward Window Tile Damage Sites under evaluation

Good morning Leland & Stan,

Thanks for your all your work; we enjoyed hearing from you last night. Today we've uplinked Transfer List changed pages, updated 5MLE Bag return drawings, a new Return Middeck Layout, and two messages:

MSG 037 – Bag G Return Config
MSG 038 – Bag A (BMRRM) Return Config

Also, you're almost done with resupply! The only remaining items we see are:

- 26.8 (Hard Drive) – imagery downlinked FD04; now ready for transfer
- 26.12 (Movie DVD) – we think you already gave this to Peggy with her Christmas gifts
- 36 (Silver Biocide Syringe Kit) – do not transfer until CWC fills are complete
- 37 (Multimeter) – will be swapped on FD06
- 45 (IMV O-ring Kit) – needed for hatch close

The Transfer List Excel file, FD05_TransferList_STS122.xls, is located on the KFX machine in **C:\OCA-up\transfer**.

For ISS, the Transfer List Excel file, FD05_TransferList_STS122.xls, is located in **K:\OCA-up\transfer**.

Q&As:

Q: We see you've completed Resupply Item 15, Ammonia Detection Kit s/n 1001, but not Return Item 704, Ammonia Detection Kit s/n 1002. In order to ensure the Orbiter has proper contingency items, could you please verify Item 704 is complete?

FD05 Choreography

- Leland: Pack Bag A (BMRRM) and Bag G for return (ref MSG 037 and 038).

Please update the Transfer List as follows:

In **LAYOUTS** tab: Replace pages L-2 thru L-5

In **RESUPPLY** tab: Replace page:
Resupply Page 10

In **RETURN** tab: Replace the following pages:
Return Page 1
Return Page 2
Return Page 6
Return Page 7
Return Page 9
Return Page 10

In **REFERENCE** tab: Add MSG 037 and MSG 038

Call us with any questions.
- The Transfer Team

Leland, below are instructions to pack 5MLE Bag G for return. This reconfiguration is needed to accommodate BMRRM return in 10MLE Bag A.

Objectives:

- Relocate all launch foam from Bag A to Bag G and stow return items in the foam.
- Configure the foam, and additional return items in Bag G for return.

See figure on following page for final configuration of Bag G.

Step 1: Empty Bag G of everything.

- Temp stow 0.5 CTB containing entry garments on MDDK for landing (suggested location: MA16L if empty).
- Stow LiOH (with launch cushion) in MD FLOOR STBD 2 (Bag D).

Step 2: Gather return items 401, 616, and 631 per Transfer List.

Step 3: Retrieve all foam from 10MLE (Bag A) and transfer to Bag G. Note that three pieces of the foam removed from Bag A will be used to return items in Bag G per step 4.

Step 4: Stow the return items in foam from Bag A per Figures below.

0.5 CTB: Return Bag 401

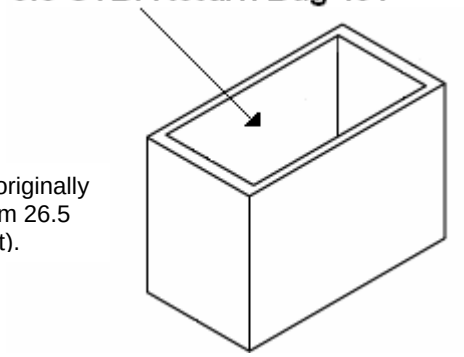

Note: Foam originally contained Item 26.5 (VOA OMI Kit).

Item 616 - LiOH Canister

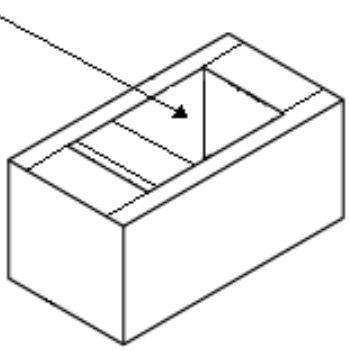

Note: Foam originally contained Item 27.2 (PFE COVERs)

Item 631 - CEVIS Display/Control Panel

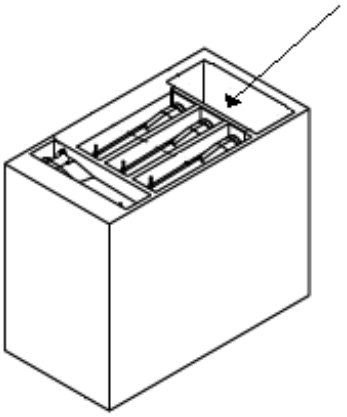

Note: Foam is labeled:
"CCC (4) -- Do Not Transfer"

Step 5: Stow foam from Bag A into Bag G per the below figure.

Bag G Return Config.

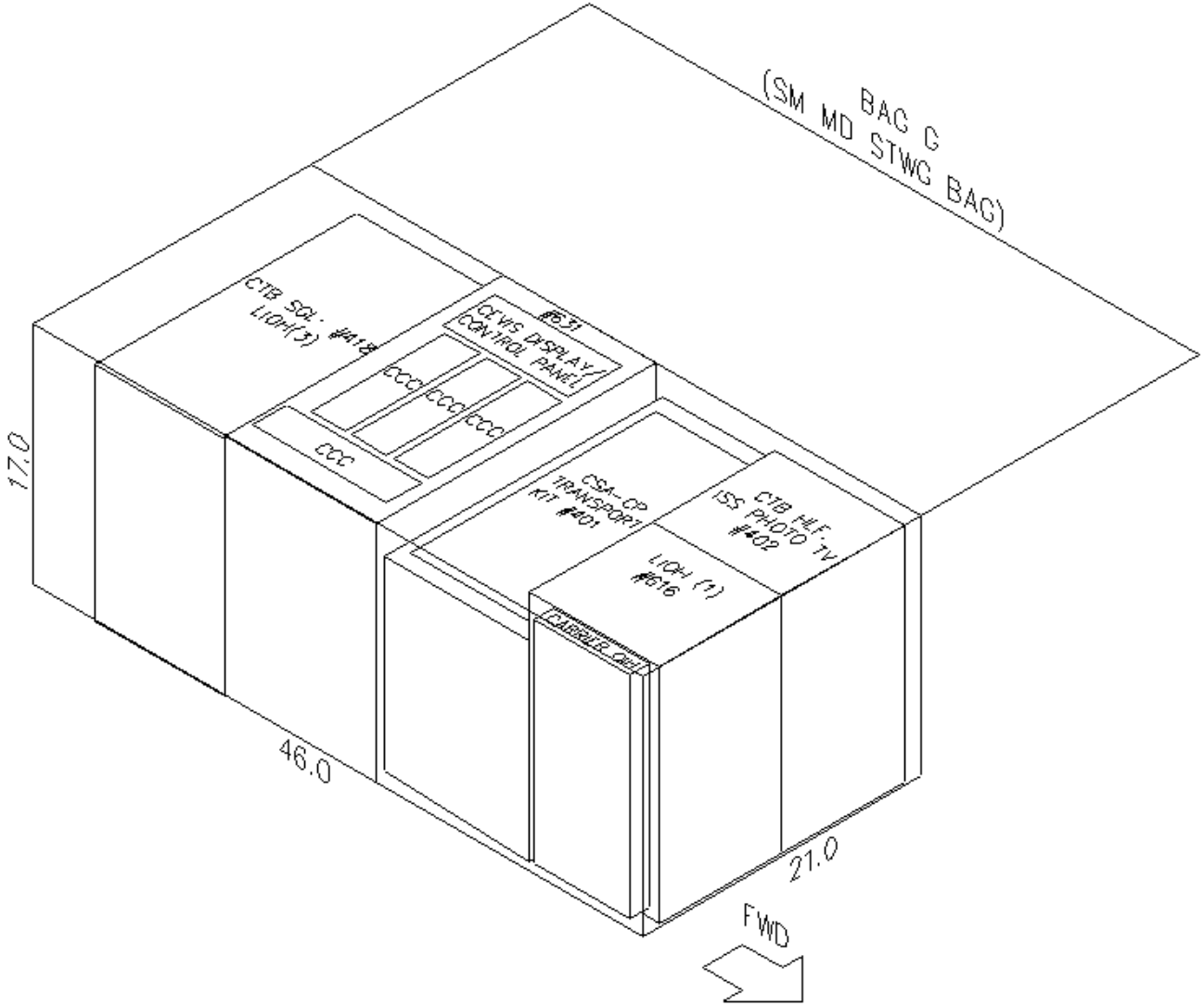

Step 6: Report completion to MCC-H (ACO Transfer).

END OF PAGE 2 OF 2, MSG 037A

Leland, below are instructions to stow the BMRRM for return. We understand you will be unable to strap this bag down until after hatch closure, but we've included the steps as a preview. We'll re-uplink the strapping plan after undock.

Objectives:

- Retrieve packing materials to configure around the BMRRM.
- Transfer and pack BMRRM in 10MLE Bag A.
- Review plan to strap bag down in Middeck after hatch closure.

NOTE: Keep Bag A and non-nomexed foam in Middeck. Non-nomexed foam must be stowed in non-flammable containers on ISS to prevent fire hazard.

Step 1: Verify MSG 037 – Bag G Return Config is complete (Bag A emptied).

Step 2: Retrieve:

- Two blue A6 panels from the lower window shade bag
- All IELK Foam from MD CEIL STBD 2 (Bag H) – or temp stowed on MDDK
- ISS foam to be used in Step 8

Step 3: Tape the blue A6 panels from window shade bag to the IELK foam lid per Figure 1.

Step 4: Place foam lid in the bottom of 10MLE Bag A.

Step 5: Place IELK foam box on top of the panels per Figure 2.

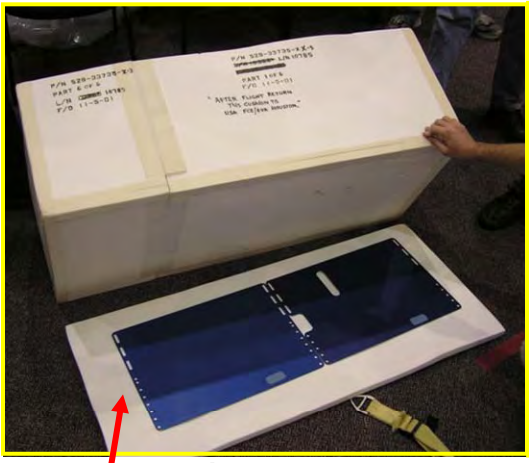

Figure 1

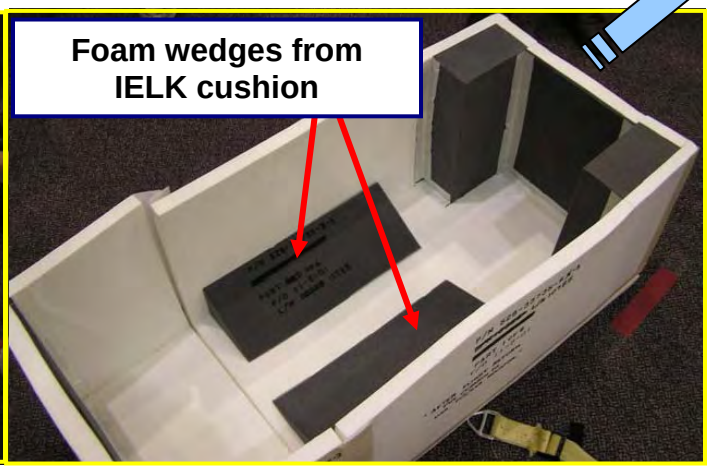

Figure 2

Blue A6 panels facing up

Step 6: Retrieve the BMRRM from NOD2D2 (Transfer List Item # 626)

Step 7: Stow BMRRM in IELK foam per Figure 3.

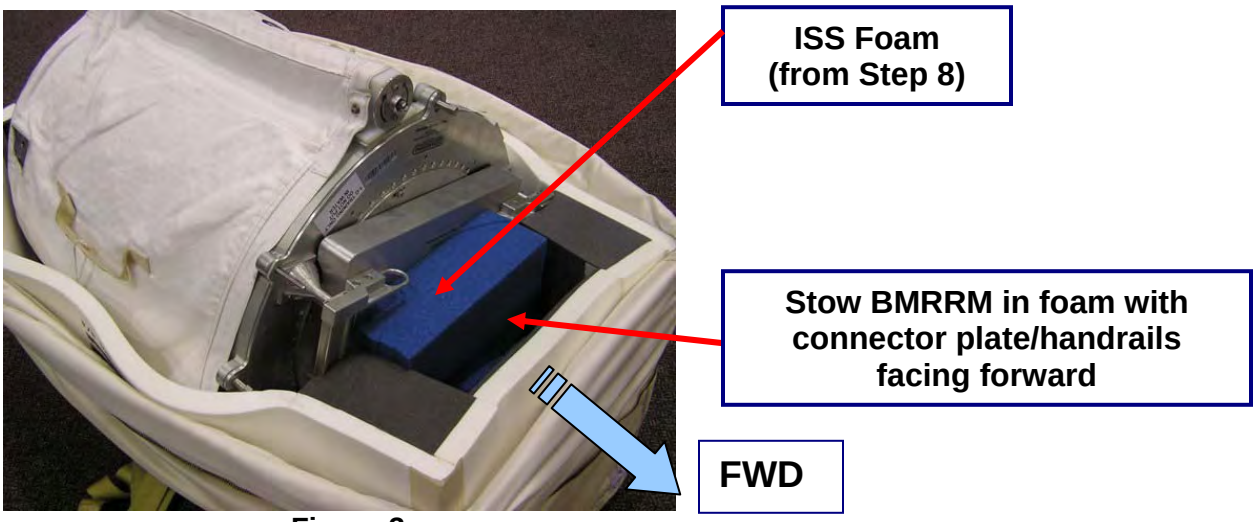

Figure 3

Step 8: Place ISS foam wedges to fill open volume on sides of BMRRM per Figure 4.

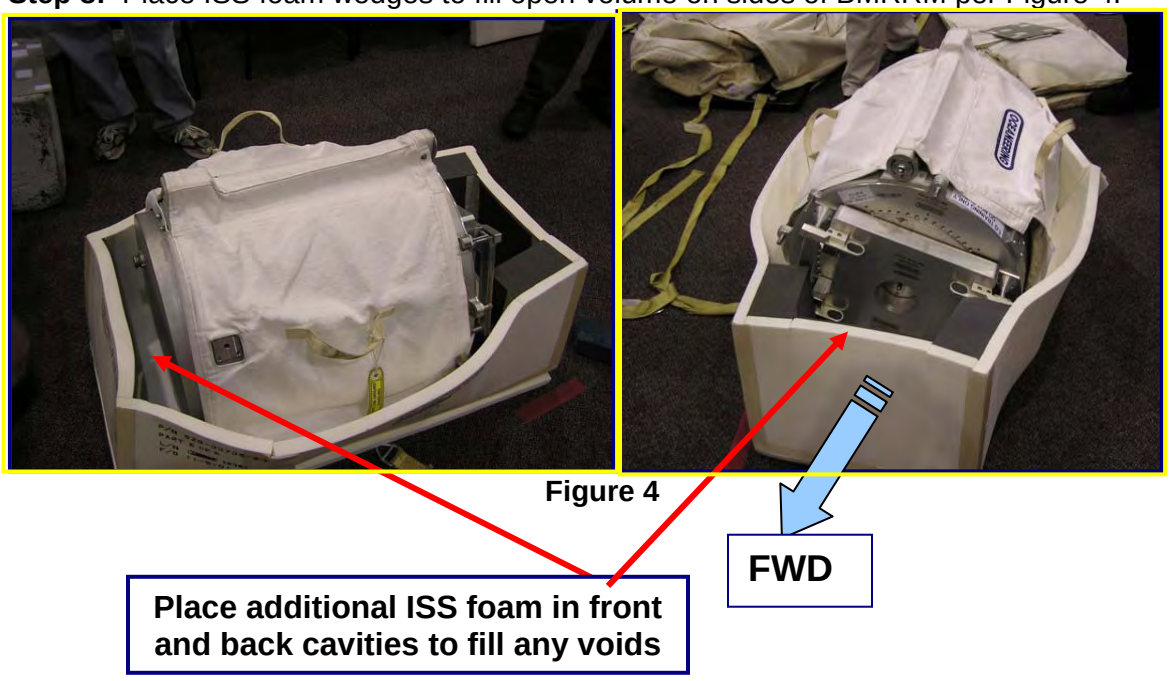

Figure 4

Step 9: Report to MCC-H (ACO Transfer) when BMRRM is packed in 10MLE Bag A.

Strap Down BMRRM in Middeck

Step 10: Ensure BMRRM connector plate/handrails are facing forward (away from the hatch) and strap down 10MLE Bag A per below figures.

FORWARD

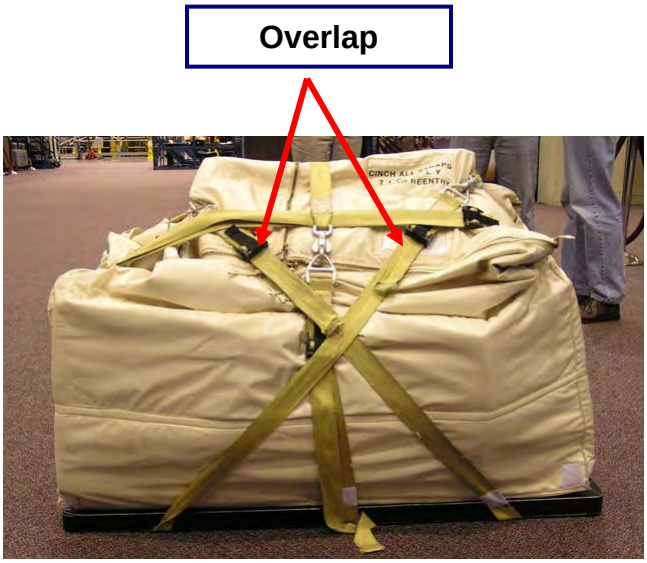

FWD

Orbiter Floor

Step 11: Report when complete and any deltas to MCC-H (MMACS).

OVERVIEW

Last night we had a good checkout of the Node 2 Starboard CBM bolts and latches; all petals are currently open and latches are ready to capture Columbus. However, during a gross inspection using the S1 Lower Outboard camera, we have spotted one area of concern on the Active CBM ring, near Bolt 1-4, close to Latch 2.

REFERENCED PROCEDURES
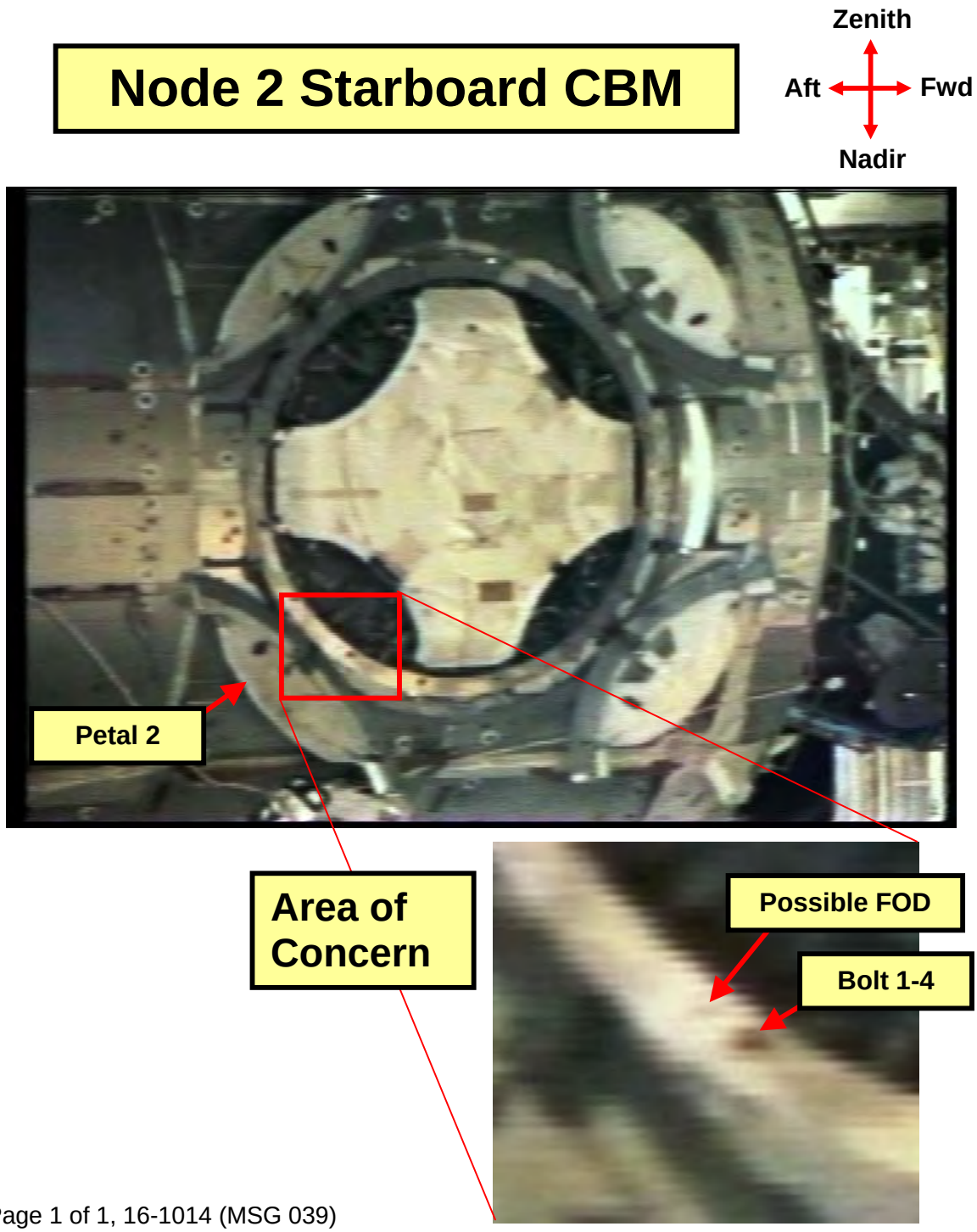
A.5 ACTIVE CBM INSPECTION REFERENCE [US_SODF: Struc and Mech: Reference/A.5 – Active CBM Inspection Reference]