STS-120 / 10A

FD 12 Execute Package

MSG	Page(s)	Title
136B	1 - 14	FD12 Flight Plan Revision **(pdf)**
137	15 - 16	FD12 Mission Summary **(pdf)**
138	17	FD11 MMT Summary **(pdf)**
139	18	FD12 EVA DELTAS **(pdf)**
140	19 - 20	Post EVA4 EMU Resize **(pdf)**
142	---	10A EVA4 SAW Damage Diagram **(pdf)**
143	21 - 22	FD12 OBSS Maneuver From Undock to Handoff **(pdf)**
144A	23 - 27	FD12 Port OBSS Handoff to SSRMS **(pdf)**
145A	28 - 33	FD12 Post-EVA OBSS Handoff to SRMS **(pdf)**
146	---	FD12 Transfer Message **(pdf)**
147	34 - 39	Middeck Stowage Maps **(pdf)**
148	40 - 41	EVA 4 Frame of Reference **(pdf)**
149	42 - 43	Updated LiOH Cue Card **(pdf)**

Approved by FAO: *F.F. Reynolds*

Last Updated: Nov 3 2007 5:28AM GMT
JEDI *(**J**oint **E**xecute package **D**evelopment and **I**ntegration), v2.04.0003*

MSG INDEX

MSG NO.	TITLE
128	SSRMS OBSS Grapple at WS 8 (16-0181A)
129	SSRMS Support of P6 4B Blanket Repair (16-0182A)
130	DOUG Setup Notes (16-0183A)
136	FD12 Flight Plan Revision
137	FD12 Mission Summary (16-0190)
138	FD11 MMT Summary (16-0191)
139	FD12 EVA Deltas (16-0192)
140	Post EVA4 EMU Resize (16-0193)
142	10A EVA4 SAW Damage Diagram (16-0196) (not printed)
143	FD12 OBSS Maneuver From Undock to Handoff (16-0200)
144	FD12 Port OBSS Handoff to SSRMS (16-0201)
145	FD12 Post-EVA OBSS Handoff to SRMS (16-0202)
146	FD12 Transfer Message (16-0205)
147	Middeck Stowage Maps
148	EVA 4 Frame of Reference (16-0208)
149	Updated LiOH Cue Card

1. The table below summarizes the Shuttle and ISS exercise constraints for today. These constraints are also denoted in your timelines for your reference.

Activity	Exercise Constraints	
	Shuttle	ISS
OBSS Handoff (while both arms are grappled to OBSS)	No exercise	No exercise
EVA 4 (during SSRMS/OBSS-Based APFR operations for SAW Repair)	No exercise	Station IRED, HC-1, Velo Ergometer not allowed
P6 SAW Deploy/Retract (during latch operations and motion)	No exercise	No exercise
STS to CMG TA Attitude Control Handover - Following Shuttle mnvr to ISS -XVV attitude	Limit Orbiter ergometer frequency to 65 RPM (1.13 HZ)	None

2. We have looked for a smart synch point for the EVA and Robotics activities this morning. Because EVA is the long pole in the tent you should press through EMU donning as soon as they are ready. If EVA preparations get started early, be sure to start the SRMS Maneuver to Handoff no later than the start of EMU Purge.

3. We will not be printing MSG 142 onboard with the rest of the morning mail. Feel free to print it if you wish.

4. REPLACE PAGES 2-42, 2-44, AND 3-128 THROUGH 3-139.

11/03/07 00:24:21 **REPLANNED**

GMT 11/03/07 (307) β = −60 MET Day 010

04 05 06 07 08 09 10 11 12 13 14 15 12 13 14 15 16 17 18 19 20 21 22 23 011/00

STS-120	FD12 **R2,IV** CDR MELROY	SLEEP; LOG; POST SLEEP; PMC A/G; POST SLEEP; MNVR H/O; INHIBIT PADBT; OBSS^; IV SUPPORT
STS-120	**R1** PLT ZAMKA	SLEEP; LOG; POST SLEEP; P/TV 07 S/U; DCS; MNVR H/O; OBSS^; CWC INIT #9; P/TV EVA/SSRMS; CWC TERM #9; CWC XFER; P/TV EVA/SSRMS
STS-120	**EV1** MS1 PARAZYNSKI	SLEEP (A/L); POST SLEEP; HYGN BREAK/ PREBRTHE; CAMPOUT EVA PREP; EMU PURGE; EMU PBRTHE; C/L DPRS; PDPR; EVA 4 A/L EGRESS; OBSS SETUP AND APFR; MNVR 4B SAW; **EVA 4 (6:30)** 4B SAW TROUBLESHOOT; MNVR TO APFR EGRESS
STS-120	**M2** MS2 WILSON	SLEEP; LOG; POST SLEEP; MCIU*; OBSS GRPL; SSRMS MNVR EVA4 POSN; SSRMS EVA SUPPORT
STS-120	**EV2** MS3 WHEELOCK	SLEEP (A/L); POST SLEEP; HYGN BREAK/ PREBRTHE; CAMPOUT EVA PREP; EMU PURGE; EMU PBRTHE; C/L DPRS; PDPR; EVA 4 A/L EGRESS; OBSS SETUP AND APFR; GET AHEADS GCA; 4B SAW TROUBLESHOOT; GET AHEADS GCA
STS-120	**R2** MS4 NESPOLI	SLEEP; POST SLEEP; HYGN BREAK; CAMPOUT EVA PREP; EMU PURGE; EMU PBRTHE; C/L DPRS; PDPR; P/TV SRMS
STS-120	FE-2 DN ANDERSON	SLEEP (8.5); POST SLEEP; PREP WORK; HAM; PCS R/B; EXERCISE RED; N1AFT GUIDE ASSY; N1FWD GUIDE ASSY INS; CWC INIT; CWC TRM; EXERCISE TVIS; MIDDAY-MEAL; LBAFT GUIDE ASSY; LBFWD GUIDE ASSY; JRNLS; IWIS; XFER
EXP 16	**IV2** ISS CDR WHITSON	SLEEP (8.5); IMMN*; POST SLEEP; HYGN BREAK; CAMPOUT EVA PREP; EMU PURGE; EMU PBRTHE; C/L DPRS; PDPR; EXER CEVIS; FFQ; MIDDAY-MEAL
EXP 16	**IV2** FE-1 MALENCHENKO	SLEEP (8.5); POST SLEEP; PBA; HYGN BREAK; CAMPOUT EVA PREP; EMU PURGE; EMU PBRTHE; C/L DPRS; PDPR; PBA; EXERCISE TVIS; EXERCISE CEVIS; MIDDAY-MEAL; ORIENTATION
UP	**M1** FE-2 UP TANI	SLEEP (8.5); IMMN*; POST SLEEP; PREP WORK; EXERCISE TVIS; OBSS GRPL; SSRMS MNVR EVA4 POSN; SSRMS EVA SUPPORT

DAY/NIGHT

ORBIT 166 167 168 169 170 171 172 173 174

TDRS W -171 E -46 Z -275

ORB ATT BIAS -XLV +ZVV

SSRMS WS8

^SRMS PORT HANDOFF

NOTES

2-42 No Exercise SAW Latch Ops

*FILTER CK

No Exercise Both arms Grappled

FLT PLN/120/FLIGHT No IRED, Velo, or ERGO Exercise, P6 SAW Repair

No Exercise Latch Ops

11/03/07 00:24:21 **REPLANNED**

GMT 11/03/07 (307) 16 17 18 19 20 21 22 23 11/04 01 02 03
β = −59 011/00 01 02 03 04 05 06 07 08 09 10 11 12
MET Day 011

| | | |

STS-120 FD 12

REPLANNED

GMT Date 11/03 (307) | W | TDRSE | Z | ORB | MET Day 010 | STS ATI | CDR MELROY | PLT ZAMKA | MS1 PARAZYNSKI | Notes

12:00 | 13:00 | 14:00 | 15:00 | 16:00

04:00 | 05:00 | 06:00 | 07:00

166 | 167 | 168 | 169

BIAS - XLV + ZVV

FD12 EZ ACTIVITIES
OCAC Filter Inspect
Hard Reboot PGSCs (Except RPOP and RPOP 2)

SLEEP | SLEEP | SLEEP

FLIGHT SLEEP LOG (ORB OPS, SDBI)
POST-SLEEP ACTIVITY (ORB OPS, CREW SYS)

FLIGHT SLEEP LOG (ORB OPS, SDBI)
POST-SLEEP ACTIVITY (ORB OPS, CREW SYS)

POST-SLEEP ACTIVITY (ORB OPS, CREW SYS)

PRIVATE MEDICAL CONFERENCE

POST-SLEEP ACTIVITY (ORB OPS, CREW SYS)

EVA SYS: 2.315 HYGIENE BREAK
MCC-H will perform steps 1-4, 16-20, & 23

EVA SYS: 2.320 10.2 PSIA CAMPOUT EVA PREP
Omit Steps 70-71 (Perform Step 72)

No Exercise
SAW 4B Latches

STS-120 FD 12

REPLANNED

GMT Date 11/03 (307) | W | TDRS E | Z | ORB 166 167 168 169 | MET Day 010 | STS ATI

MS2 WILSON | MS3 WHEELOCK | MS4 NESPOLI | Notes

12:00
04:00
13:00
05:00
14:00
06:00
15:00
07:00
16:00

BIAS-XLV+ZVV

SLEEP

SLEEP

SLEEP

FLIGHT SLEEP LOG (ORB OPS, SDBI)
POST-SLEEP ACTIVITY
(ORB OPS, CREW SYS)

POST-SLEEP ACTIVITY
(ORB OPS, CREW SYS)

POST-SLEEP ACTIVITY
(ORB OPS, CREW SYS)

EVA SYS: 2.315 HYGIENE BREAK
MCC-H will perform steps 1-4,
16-20, & 23

EVA SYS: 2.315 HYGIENE BREAK
Steps 21-29;
MCC-H will perform step 23

EVA SYS: 2.320 10.2 PSIA
CAMPOUT EVA PREP
Omit Steps 70-71 (Perform Step 72)

EVA SYS: 2.320 10.2 PSIA
CAMPOUT EVA PREP
Omit Steps 70-71 (Perform Step 72)

No Exercise
SAW 4B Latches

STS-120 FD 12

REPLANNED

GMT Date 11/03 (307) | W | TDRSE | Z | ORB | MET Day 010 | STS ATI | CDR MELROY | PLT ZAMKA | MS1 PARAZYNSKI | Notes

08:00 — 09:00 — 10:00 — 11:00

16:00 — 17:00 — 18:00 — 19:00 — 20:00

169 — 170 — 171

BIAS - XLV + ZVV

CDR MELROY

- POST-SLEEP ACTIVITY (ORB OPS, CREW SYS)
- FD12 OBSS MNVR FROM UNDOCK TO HANDOFF Ref: MSGs 143 & 136, Item 2
- EVA 4 INHIBIT PAD Ref: MSG 141
- FD12 PORT OBSS HANDOFF TO SSRMS Ref. MSG 144
- IVA SUPPORT EVA 2

PLT ZAMKA

- POST-SLEEP ACTIVITY (ORB OPS, CREW SYS)
- P/TV07 EVA (PHOTO/TV, SCENES) Perform SETUP
- DATE/TIME SET FOR DCS 760 S/N 1016 Ref: MSG 122
- FD12 OBSS MNVR FROM UNDOCK TO HANDOFF Ref: MSGs 143 & 136, Item 2
- FD12 PORT OBSS HANDOFF TO SSRMS Ref. MSG 144
- SHUTTLE/ISS H2O CONTAINER FILL (ORB OPS, ECLS) Perform CWC FILL #9, Fill Duration ~ 50 min, Ref. MSG 029
- P/TV SUPPORT EVA
- P/TV SUPPORT SSRMS
- SHUTTLE/ISS H2O CONTAINER FILL (ORB OPS, ECLS) Perform FILL TERMINATION
- CWC TRANSFER Transfer CWC(s) to ISS
- P/TV SUPPORT EVA
- P/TV SUPPORT SSRMS

MS1 PARAZYNSKI

- EVA SYS: 2.320 10.2 PSIA CAMPOUT EVA PREP Omit Steps 70-71 (Perform Step 72)
- EVA SYS: 1.220 EMU PURGE Omit Steps 18 & 20
- EVA SYS: 1.225 EMU PREBREATHE Ref. MSG 025 & 139
- EVA SYS: CREWLOCK DEPRESS (CC)
- EVA SYS: CREWLOCK POST DEPRESS(CC)
- EVA 4 A/L EGRESS AND SETUP
- OBSS SETUP AND APFR INGRESS
- SSRMS/OBSS MANEUVER TO 4B SAW

Notes

- No Exercise SAW 4B Latches
- No Exercise Both Arms Grappled
- UPLINK β0 Only + Boxes C4,C2,C3
- No Exercise P6 Saw Repair

STS-120 FD 12

REPLANNED

GMT Date 11/03 (307) | W | TDRSE | Z | ORB | MET Day 010 | STS ATI

MS2 WILSON

- 16:00 POST-SLEEP ACTIVITY (ORB OPS, CREW SYS)
- L17 Check MCIU filter screen
- 17:00
- SSRMS OBSS GRAPPLE AT WS8 Ref: MSG 128
- 18:00 SSRMS SUPPORT OF P6 4B BLANKET REPAIR Steps 1 and 2 Ref: MSG 129
- 19:00 SSRMS SUPPORT OF P6 4B BLANKET REPAIR Ref: MSG: 129
- 20:00

MS3 WHEELOCK

- EVA SYS: 2.320 10.2 PSIA CAMPOUT EVA PREP Omit Steps 70-71 (Perform Step 72)
- EVA SYS: 1.220 EMU PURGE Omit Steps 18 & 20
- EVA SYS: 1.225 EMU PREBREATHE Ref. MSG 025 & 139
- EVA SYS: CREWLOCK DEPRESS (CC)
- EVA SYS: CREWLOCK POST DEPRESS(CC)
- EVA 4 A/L EGRESS AND SETUP
- OBSS SETUP AND APFR INGRESS
- GET-AHEAD ACTIVITIES AND EV1 SSRMS GCA

MS4 NESPOLI

- EVA SYS: 2.320 10.2 PSIA CAMPOUT EVA PREP Omit Steps 70-71 (Perform Step 72)
- EVA SYS: 1.220 EMU PURGE Omit Steps 18 & 20
- EVA SYS: 1.225 EMU PREBREATHE Ref. MSG 025 & 139
- EVA SYS: CREWLOCK DEPRESS (CC)
- EVA SYS: CREWLOCK POST DEPRESS(CC)
- P/TV SUPPORT EVA
- P/TV SUPPORT SSRMS

Notes

- No Exercise SAW 4B Latches
- No Exercise Both Arms Grappled
- No IRED, VELO or Egometer Exercise During P6 SAW Repair

08:00 09:00 10:00 11:00

169 170 171

BIAS - XLV + ZVV

STS-120 FD 12

REPLANNED

GMT Date 11/03 (307) | W | TDRSE | Z | ORB | MET Day 010 | STS ATI

CDR MELROY | PLT ZAMKA | MS1 PARAZYNSKI | Notes

12:00 — 13:00 — 14:00 — 15:00

20:00 — 21:00 — 22:00 — 23:00 — 00:00

172 — 173 — 174

BIAS-XLV+ZVV

CDR: IVA SUPPORT EVA 2

PLT: P/TV SUPPORT EVA; P/TV SUPPORT SSRMS

MS1: SSRMS/OBSS MANEUVER TO 4B SAW; 4B SAW TROUBLESHOOTING; SSRMS/OBSS MNVR TO APFR EGRESS POSITION

Notes: No IRED, VELO or Egometer Exercise During P6 SAW Repair; No Exercise During Latch Ops

STS-120 FD 12

REPLANNED

GMT Date 11/03 (307) | W | TDRSE Z | ORB | MET Day 010 | STS ATI

MS2 WILSON | MS3 WHEELOCK | MS4 NESPOLI | Notes

12:00
13:00
14:00
15:00

ORB: 172, 173, 174

20:00
21:00
22:00
23:00
00:00

STS ATI: BIAS -XLV +ZVV

MS2 WILSON:
- SSRMS SUPPORT OF P6 4B BLANKET REPAIR
  Ref: MSG: 129

MS3 WHEELOCK:
- GET-AHEAD ACTIVITIES AND EV1 SSRMS GCA
- 4B SAW TROUBLESHOOTING
- GET-AHEAD ACTIVITIES AND EV1 SSRMS GCA

MS4 NESPOLI:
- P/TV SUPPORT EVA
- P/TV SUPPORT SSRMS

Notes:
- No IRED, VELO or Egometer Exercise During P6 SAW Repair
- No Exercise During Latch Ops

STS-120 FD 12

REPLANNED

GMT Date 11/03 (307) | W | TDRSE | Z | ORB | MET Day 011 | STS ATI

CDR MELROY	PLT ZAMKA	MS1 PARAZYNSKI	Notes
	P/TV SUPPORT EVA P/TV SUPPORT SSRMS	SSRMS/OBSS MNVR TO APFR EGRESS POSITION	No IRED, VELO or Egometer Exercise During P6 SAW Repair
IVA SUPPORT EVA 2		APFR EGRESS AND OBSS CLEANUP	
		EVA 4 CLEANUP AND A/L INGRESS	
FD12 POST EVA OBSS HANDOFF TO SRMS Ref: MSG 145 Steps 1 & 2	FD12 POST EVA OBSS HANDOFF TO SRMS Ref: MSG 145 Steps 1 & 2	EVA SYS: CREWLOCK PREREPRESS (CC) EVA SYS: CREWLOCK REPRESS (CC) EVA SYS: 1.240 POST EVA With H2O Omit Steps 37, 39, & 67 MCC-H will perform steps 43 & 68 Ref: MSGs 115 and 139	UPLINK β21 Only + Boxes C4,C2,C3
FD12 POST-EVA OBSS HANDOFF TO SRMS Ref: MSG 145 Steps 3 & 4	FD12 POST-EVA OBSS HANDOFF TO SRMS Ref: MSG 145 Steps 3 & 4		No Exercise SRMS OBSS Grapple
FD12 POST-EVA OBSS HANDOFF TO SSRMS Ref: MSG 145 Steps 5 & 6	FD12 POST-EVA OBSS HANDOFF TO SSRMS Ref: MSG 145 Steps 5 & 6	PRE-SLEEP ACTIVITY (ORB OPS, CREW SYS)	
PRE-SLEEP ACTIVITY (ORB OPS, CREW SYS)	PRE-SLEEP ACTIVITY (ORB OPS, CREW SYS)		

BIAS - XLV + ZVV

Time scale: 16:00, 17:00, 18:00, 19:00; 00:00, 01:00, 02:00, 03:00, 04:00

174, 175, 176, 177

STS-120 FD 12

REPLANNED

GMT Date 11/03 (307) | W | TDRSE | Z | ORB | MET Day 011 | STS ATI

MS2 WILSON	MS3 WHEELOCK	MS4 NESPOLI	Notes
SSRMS SUPPORT OF P6 4B BLANKET REPAIR Ref: MSG: 129	GET-AHEAD ACTIVITIES AND EV1 SSRMS GCA	P/TV SUPPORT EVA P/TV SUPPORT SSRMS	No IRED, VELO or Egometer Exercise During P6 SAW Repair
	APFR EGRESS AND OBSS CLEANUP		
	EVA 4 CLEANUP AND A/L INGRESS		
	EVA SYS: CREWLOCK PREREPRESS (CC)	EVA SYS: CREWLOCK PREREPRESS (CC)	
	EVA SYS: CREWLOCK REPRESS (CC)	EVA SYS: CREWLOCK REPRESS (CC)	
SSRMS SUPPORT OF P6 4B BLANKET REPAIR Ref: MSG 129 Steps 15-17	EVA SYS: 1.240 POST EVA With H2O Omit Steps 37, 39, & 67 MCC-H will perform steps 43 & 68 Ref: MSGs 115 and 139	EVA SYS: 1.240 POST EVA With H2O Omit Steps 37, 39, & 67 MCC-H will perform steps 43 & 68 Ref: MSGs 115 and 139	
SSRMS SUPPORT OF P6 4B BLANKET REPAIR Ref. MSG 129 Steps 18-22			No Exercise SRMS OBSS Grapple
		POST EVA 4 EMU RESIZE Ref: MSG 140	
PRE-SLEEP ACTIVITY (ORB OPS, CREW SYS)	PRE-SLEEP ACTIVITY (ORB OPS, CREW SYS)		

Time scale: 16:00, 17:00, 18:00, 19:00

Day 011: 00:00, 01:00, 02:00, 03:00, 04:00

ORB: 174, 175, 176, 177

BIAS - XLV + ZVV

STS-120 FD 12

REPLANNED

GMT Date 11/03 (307) | W | TDRSE | Z | ORB | MET Day 011 | STS ATI

CDR MELROY | PLT ZAMKA | MS1 PARAZYNSKI | Notes

04:00

PRE-SLEEP ACTIVITY (ORB OPS, CREW SYS)

PLAYBACK (DIGITAL) (PHOTO/TV, CUE CARD) Crew Choice KU TDRE (04:00-04:32)

PRE-SLEEP ACTIVITY (ORB OPS, CREW SYS)

20:00

A15 CRYO TK5 HTR O2 A -AUTO

JNT OPS: 3.110 H/O ATT CNTRL CMG TO ORB

MNVR (TRK) BIAS -XLV -ZVV (ISS -XVV TEA)
TG=2 BV=5 P=157 Y=352 OM=178
A12/AUTO/VERN Init TRK (11/04:30)

PRE-SLEEP ACTIVITY (ORB OPS, CREW SYS)

PRE-SLEEP ACTIVITY (ORB OPS, CREW SYS)

177

05:00

IMU STAR OF OPPTY ALIGN (ORB OPS, GNC)

21:00

JNT OPS: 3.111 H/O ATT CNTRL ORB TO ISS: On MCC Go, DAP: FREE

No Orb Ergometer >65 RPM During Handover

178

PMC:NETMEETING VID CONF(ORB OPS, PGSC)
Omit VLHS item in Step 1, Omit Step 3
Use A/G2 for audio & KFX PGSC, Ku TDRE: 05:40-06:09

06:00

PRE-SLEEP ACTIVITY (ORB OPS, CREW SYS)

BIAS -XLV -ZVV

22:00

07:00

SLEEP | SLEEP | SLEEP

179

23:00

08:00

STS-120 FD 12

REPLANNED

GMT Date 11/03 (307) | W E Z | ORB | MET Day 011 | STS ATI

MS2 WILSON | MS3 WHEELOCK | MS4 NESPOLI | Notes

20:00 | 21:00 | 22:00 | 23:00

04:00 | 05:00 | 06:00 | 07:00 | 08:00

177 | 178 | 179

BIAS-XLV-ZVV

PRE-SLEEP ACTIVITY (ORB OPS, CREW SYS)

SLEEP

No Orb Ergometer >65 RPM During Handover

Good Morning Discovery!!!!

Everyone is ready for today!!!!

Have a great EVA!!!

YOUR CURRENT ORBIT IS: 188 X 180 NM

NOTAMS:

EDW – RWY 15/33 ELS ONLY. RWY 18L – CLOSED.
NOR – GREEN.
WAL – RWY 04/22 CLOSED.
NTU - RWY 32L/14R CLOSED
RWY 05R FIRST 3000' CLOSED, 8997' REMAINING
NKT - FIRST 1000' OF RWY 23L & 32R CLOSED.
BASE CLOSED 2 NOV 1900Z UNTIL 3 NOV 1600Z
LAJ REQUIRES 30 MIN. NOTICE TO CLEAR RWY 2300-0900Z DAILY EXCEPT SUNDAY
FFA - NOT SUPPORTED.
WAK - UNUSABLE.
AMB - UNUSABLE.
JDG – DIEGO GARCIA: CLOSED 1800 - 0100Z.
IKF – NO AGREEMENT FOR USE.
AWG – NO AGREEMENT FOR USE.
BEN – POLITICALLY NOT RECOMMENDED/NOT SUPPORTED.

NEXT 2 PLS OPPORTUNITIES:

NOR23 ORB 172 – 10/20:44 (SCT250 300/04P07)
EDW04 ORB 188 – 11/21:05 (SCT250 040/07P11)

OMS TANK FAIL CAPABILITY:

L OMS FAIL: NO R OMS FAIL: NO

LEAKING OMS PRPLT BURN:

L OMS LEAK: ALWAYS BURN RETROGRADE
R OMS LEAK: ALWAYS BURN RETROGRADE

OMS QUANTITIES(%)

L OMS OX = 33.5 R OMS OX = 33.5
FU = 33.1 FU = 33.4

SUBTRACT I'CNCT COUNTER FOR CURRENT OMS QUANTITIES

DELTA V AVAILABLE:

OMS	334 FPS
ARCS (TOTAL ABOVE QTY1)	44 FPS
TOTAL IN THE AFT	378 FPS
ARCS (TOTAL ABOVE QTY2)	78 FPS
FRCS (ABOVE QTY 1)	16 FPS
AFT QTY 1	76 %
AFT QTY 2	38 %

THERE ARE NO FAILURE/IMPACT/WORK AROUNDS FOR TODAY.

FD 11 MMT Summary

The MMT met today to review mission progress, systems status and an overview of EVA 4. Discovery continues to perform well. The team has used the extra 24 hours to prepare a very good plan for EVA 4 and all members of the MMT concurred with the plan.

Orbiter Status - There was one minor anomaly noted during today's MMT. The AVIU broken switch was briefly discussed.

EVA 4 Plan - The Team 4 products were handed over to the execution teams yesterday for final refinement and implementation. The MMT recognized the outstanding effort put forth by the Team 4 to create a relatively mature plan in such a short amount of time. An overview of the EVA was presented and there were very few questions voiced during the presentation. This reflects the extensive effort the teams have gone through to include all parties in the generation of the plan.

A brief review of the predicted thermal impacts to the sensors on the OBSS was provided. Most of the sensors are predicted to exceed their certification limits between 5 and 8 hours. Since the repair of the solar array is the highest priority and there is a fair amount of uncertainty in the analysis, there will not be any time constraints applied to the unpowered time of the OBSS. An OBSS sensor check will be scheduled prior to late inspection.

Wing Leading Edge System - One additional indication was recorded for a total of 8 on orbit indications so far. This indication occurred at panel 1/2R and had a magnitude of 1 g. This number of indications is well within the number of WLES indications observed previously.

Practice Installing Over Gloves

We would like to suggest that you spend a few minutes tomorrow practicing the installation of the over gloves while pressurized. This way if you have any issues, the IV crew can give you a hand (no pun intended). A good place for this might be while your SAFER is getting installed.

EMU Resize

The timeline is packed and we had to put the EMU Resize after POST EVA today so that we can get everything done before hatch closure. Message 16-0193 (MSG 140) has the procedure you will need to resize 3004 back to Scott's suit for return and put 3006 in configuration for Yuri and the first Inc-16 EVA.

POST EVA

Please include some photos of the Over Gloves when you take the other photos of the EMU Gloves. The photos can be taken with the Over Gloves doffed. Areas of interest are the same as for EMU Gloves and any other areas you see that may be unusual.

CDRA is going to be powered down for the EVA so we will have to skip the METOX REGEN INIT in Post EVA today. We'll put the same information into the detail pages and OSTPV but be sure to skip step 39 in the Post EVA procedure.

Thermal Analysis Shows Cold EVA

Engineering has evaluated the specifics for this EVA and they think it will be a cold environment. We would like to suggest that you pay particular attention to the TCV setting and make sure you stay ahead of the cold. We are not suggesting you run HOT but keep the EMU warm. Remember that once you get too cold, it's difficult to recover.

Deltas to EVA 4 Detailed Timeline:

Page 10, PRE EVA 4 TOOL CONFIG:

- Under Crewlock Bag #4, add two 85-ft safety tethers:
  - □ **EV2 85-ft safety tether (P6)**
  - □ EV1 85-ft safety tether (P6 Spare)

Page 20, BLOCK C – INSTALL CUFF LINKS:

- EV1 Step 8, change "lower hole" to "second hole"
- EV1 Step 9, change "upper hole" to "second hole"
- IV column SSRMS callout, change "lower hole" to "second hole"

Page 24, EVA 4 CLEANUP AND A/L INGRESS:

- Add EV1 step 17a. Doff Overgloves if reqd for switch throws
- Above EV2 step 12, add step 11a. Doff Overgloves if reqd for switch throws

You'll note that we did not provide a post-EVA tool config page but think you can just use the pre-EVA tool config since item locations shouldn't change very much

<u>Objective:</u> To reconfigure Yuri's suit for his stage EVA and Scott's suit for return, complete the following steps (reference Figures 1&2):

1. Remove Scott's gloves/lower arms from EMU 3006
2. Install arms on EMU 3004 (✓Arm red disconnect to right, ✓locks and ✓cams)
3. Local tether Scott's gloves (s/n 6248) for drying
4. Install Yuri's gloves/lower arms/arm sizing rings on EMU 3006 (✓Arm red disconnect to right, ✓locks and ✓cams)
5. Remove Scott's LTA from EMU 3006, local tether for drying
6. Install Yuri's LTA on EMU 3006
7. Swap EMU PLSS identifier stripes, mission patch and national flag
8. Remove CCA 1166 from EMU 3006 and install in EMU 3004.
9. Swap Helmets, remove Helmet Light Assembly and ERCA (EMU TV) from Scott's helmet (s/n 1068) and install on Yuri's helmet (s/n 1069)

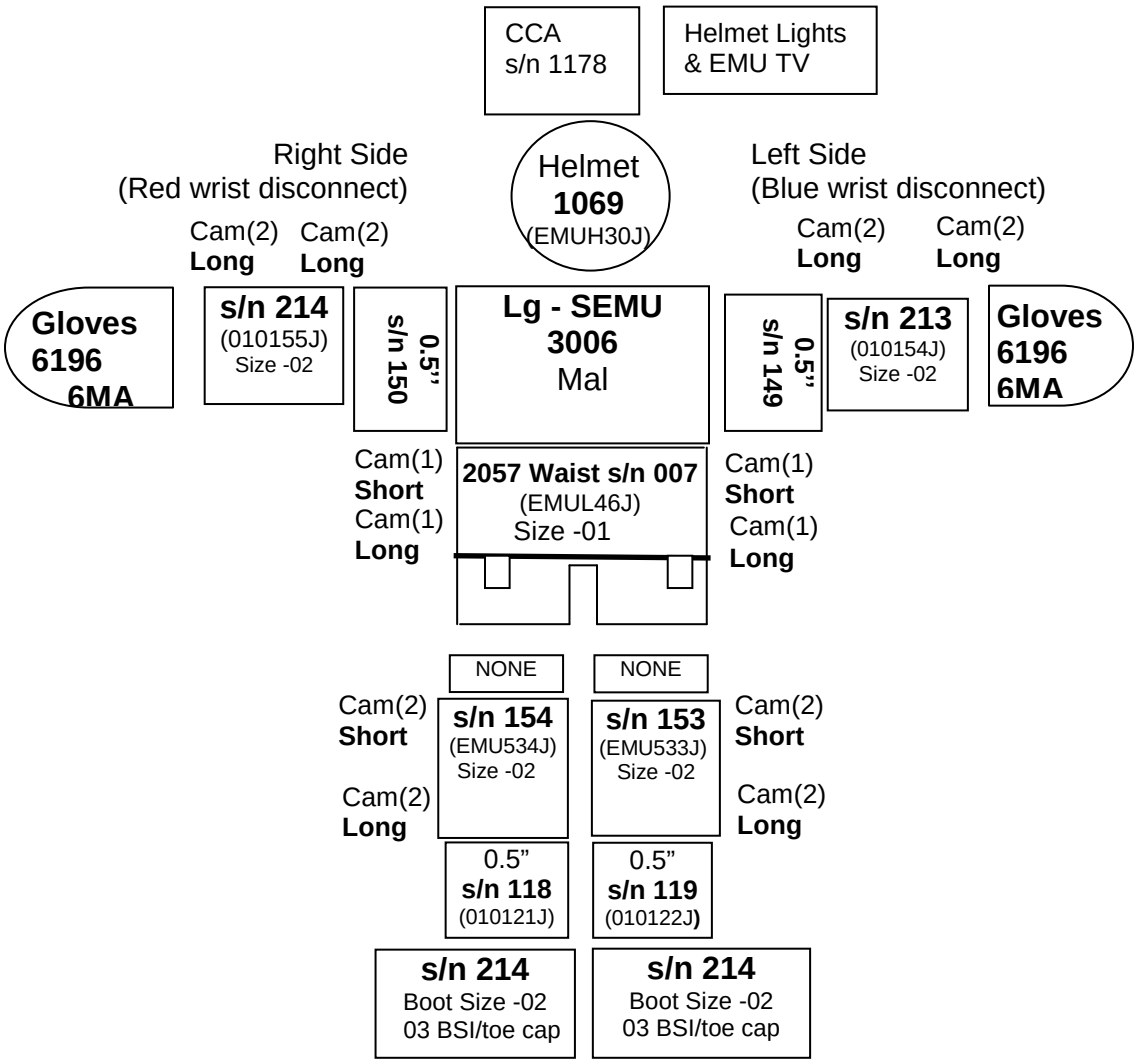

FIGURE 1. – Final EMU 3006 (Mk) Config

1

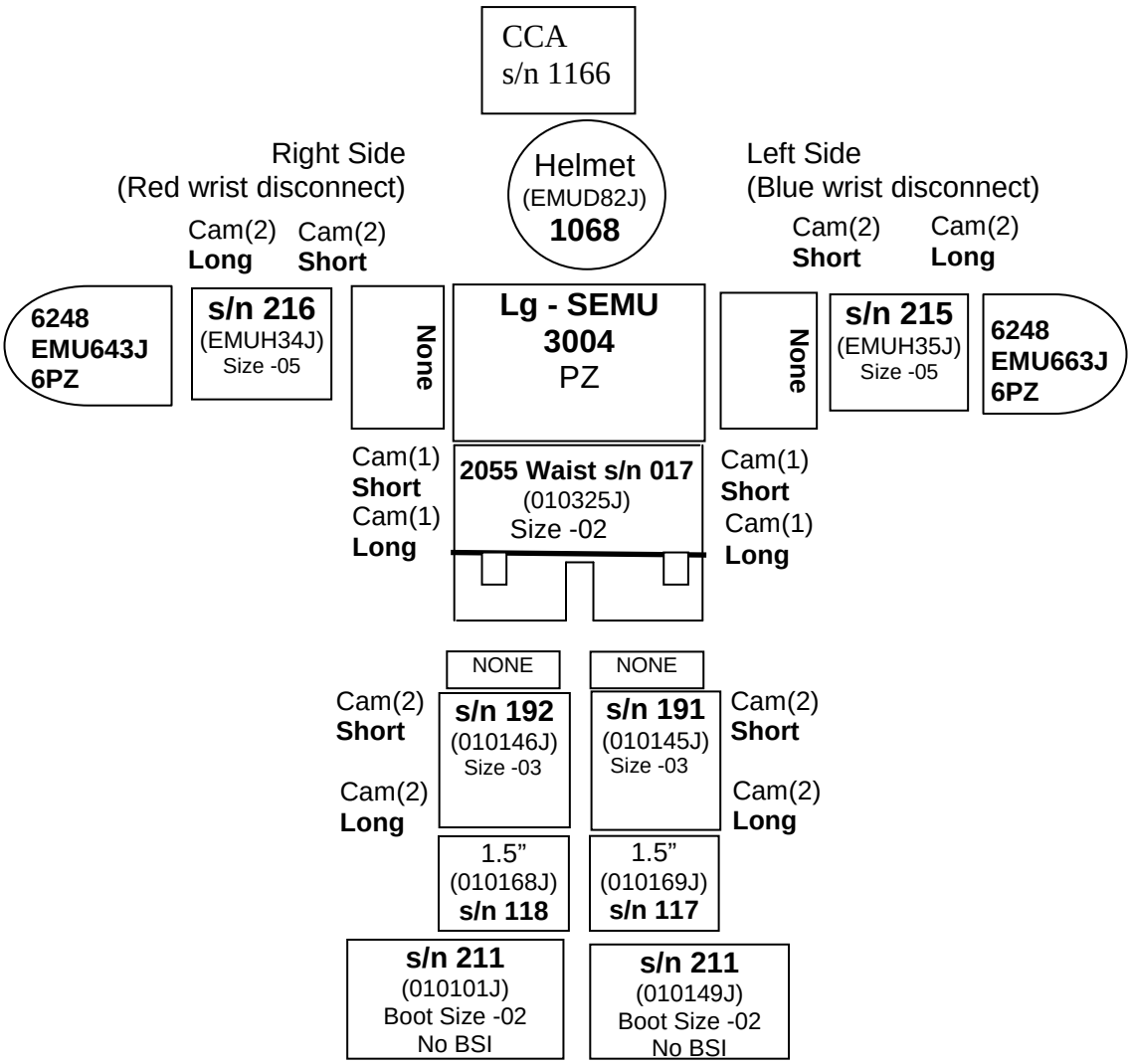

FIGURE 2. – Final EMU 3006 (Pz) Config

4B SAW Damage Diagram: Anticipated Initial Worksite Configuration

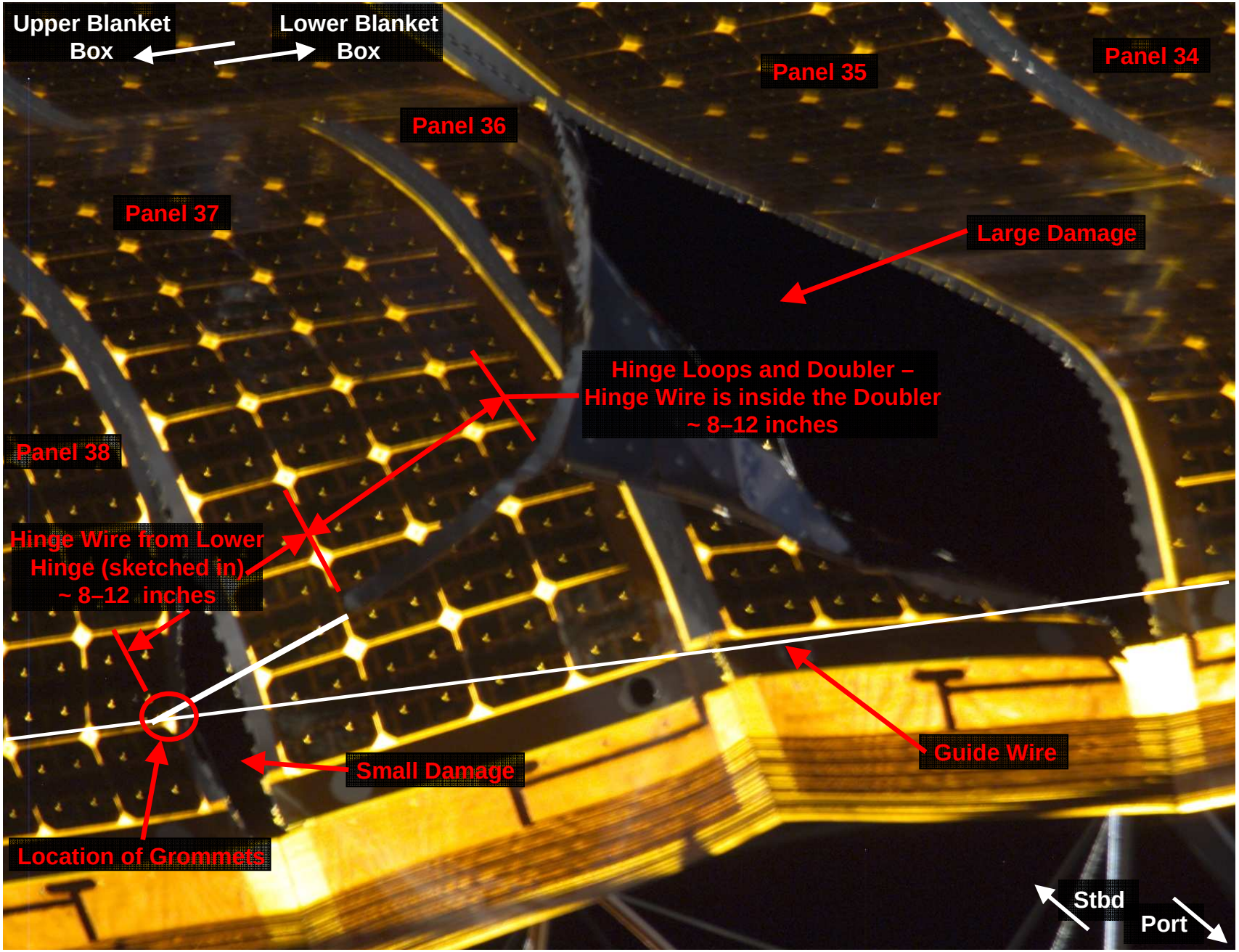

4B SAW Damage Diagram: Block B – Trim Hinge Wire (Hinge Wire Cut)

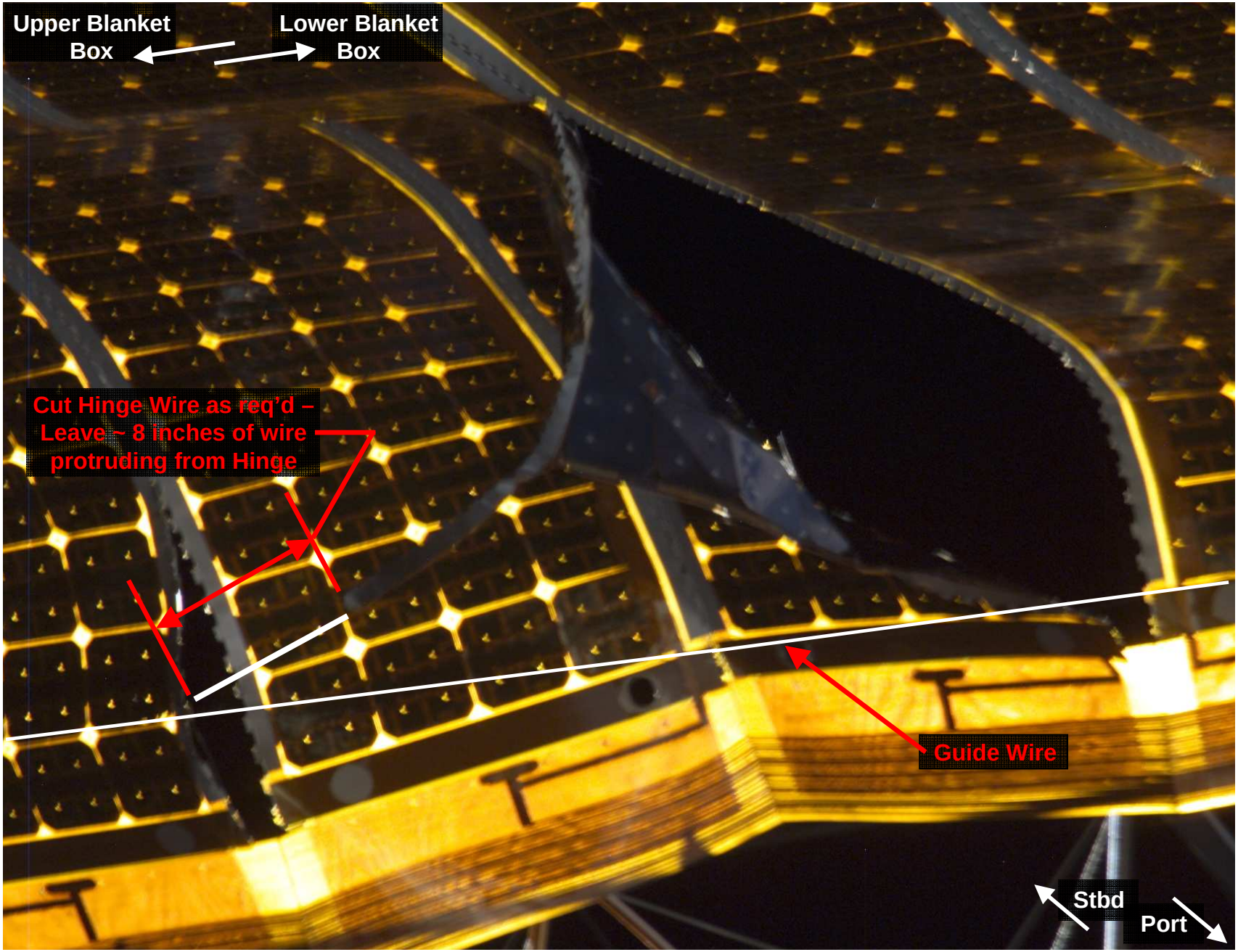

4B SAW Damage Diagram: Block B – Trim Hinge Wire (Hinge Wire Crimp)

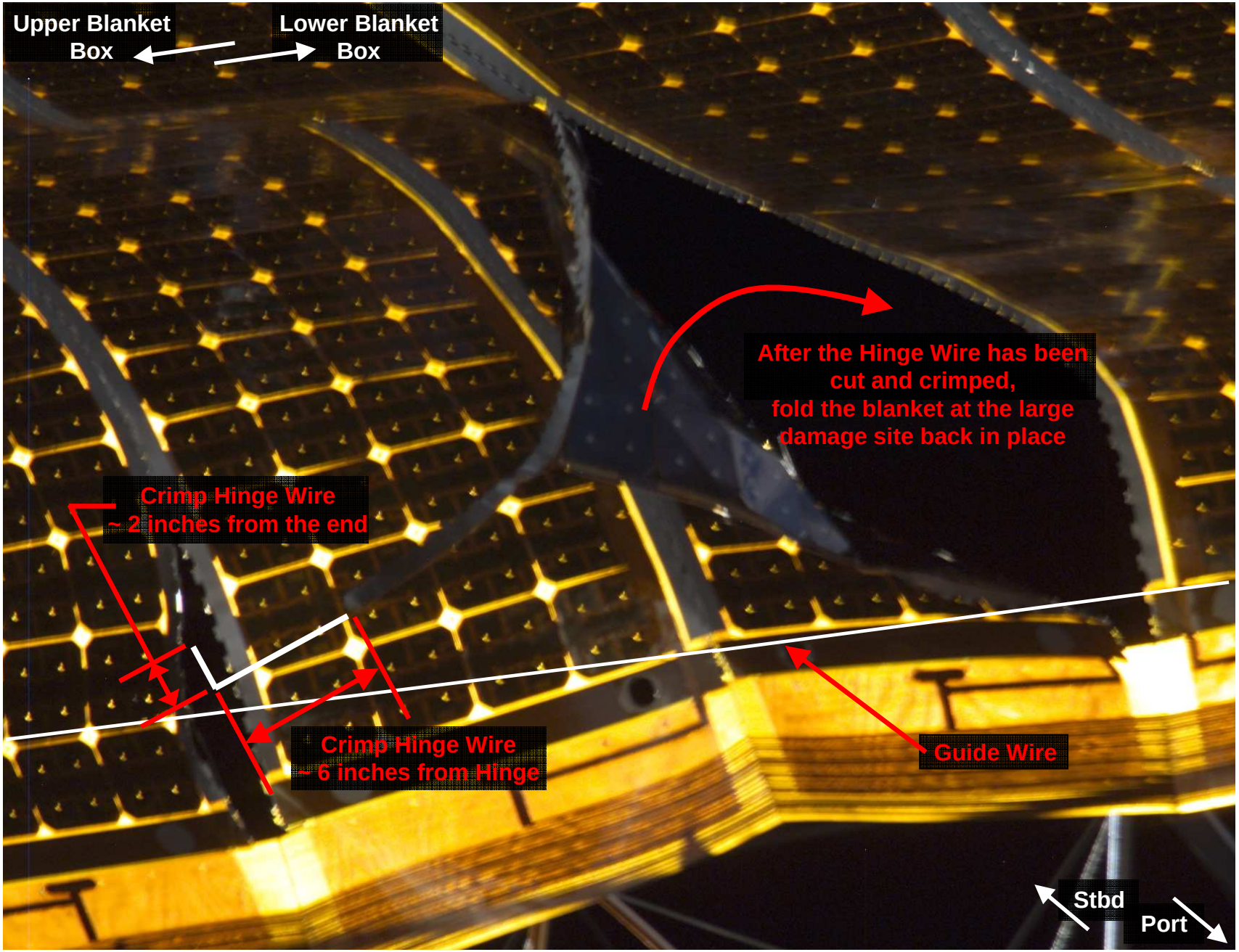

FD12 SRMS MNVR FROM UNDOCK TO PORT HANDOFF

1. SETUP

Verify SSRMS at WS8 OBSS Pre-Grapple posn:

SR	SY	SP	EP	WP	WY	WR
+125.6	+27.0	+61.8	+57.1	-103.7	-30.3	-129.5

MON 1	A (Elbow)
MON 2	B (C)
DNLK	P1 LOOB

SM 94 PDRS CONTROL

√PL ID, ITEM 3: 2

√INIT ID, ITEM 24: 2

UNDOCK posn:

	X	Y	Z	PITCH	YAW	ROLL	PL ID	
√	-1029	+229	-614	14	270	0	2	*
	SY	SP	EP	WP	WY	WR		
√	+25.8	+66.3	-49.0	-85.9	+10.7	-100.7		

* display singularity

CCTV A (0,25)

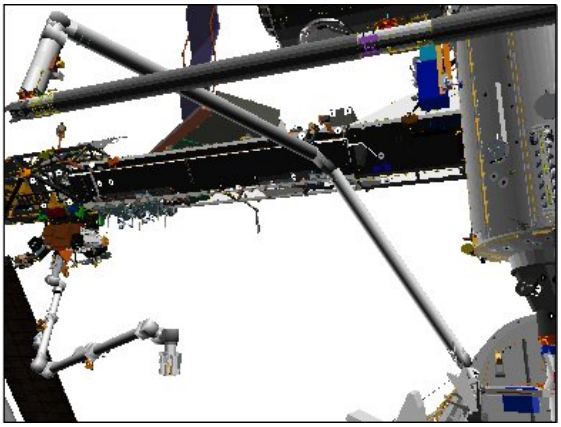

CCTV B (-20,15)

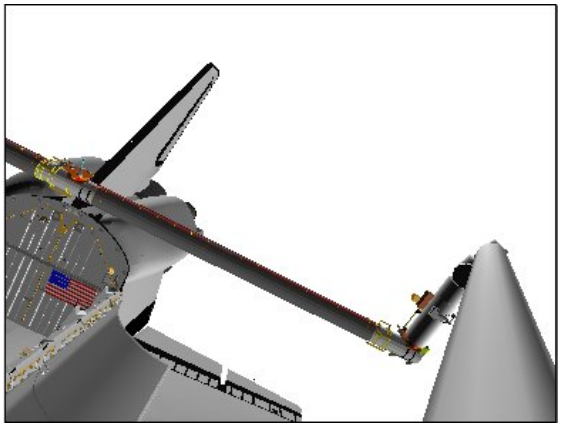

ELBOW (-30,0)

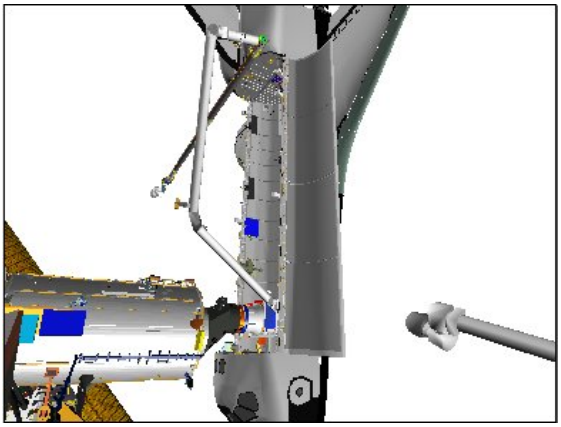

P1 LOOB (120,20)

2. <u>MANEUVER TO PORT HANDOFF POSITION</u>

RATE – as required (VERN within 10 ft)
BRAKES – OFF (tb-OFF)
MODE – SINGLE, ENTER

Mnvr to PORT HANDOFF posn:

		SY	SP	EP	WP	WY	WR	
Undock		+25.8	+66.3	-49.0	-85.9	+10.7	-100.7	
1: WP	+				-46.8			
2: WY	–					-25.0		
3: WR	+						-6.9	
4: SP	–		+65.2					
5: SY	+	+61.9						
6: EP	–			-91.6				
7: WR	+						+124.9	
8: WY	+					+8.3		
Port Handoff		+61.9	+65.2	-91.6	-46.8	+8.3	+124.9	
		X	Y	Z	PITCH	YAW	ROLL	PL ID
		-275	-564	-357	181	12	179	2

BRAKES – ON (tb-ON)

Give SSRMS operator go for OBSS Grapple

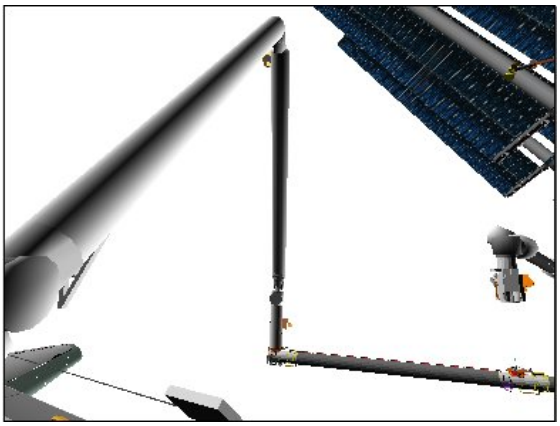

CCTV A (55,10)

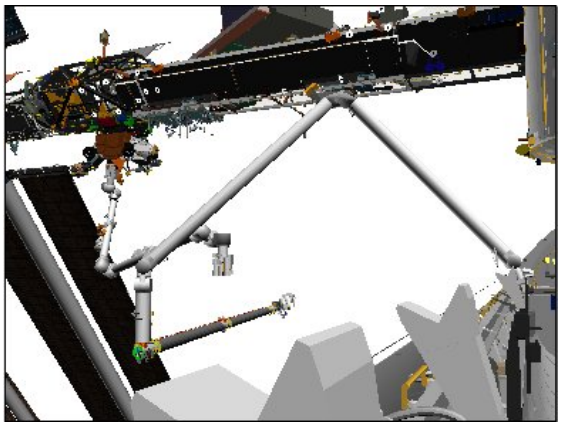

CCTV B (-25,5)

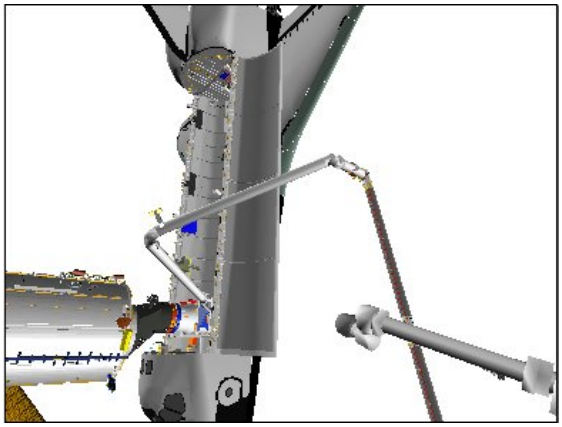

P1 LOOB (130,20)

FD12 PORT OBSS HANDOFF TO SSRMS

1. <u>SETUP</u>

MON 1	A
MON 2	B
DNLK	P1 LOOB

SM 94 PDRS CONTROL

√PL ID, ITEM 3: 2

√INIT ID, ITEM 24: 2

Verify at PORT HANDOFF posn:

X	Y	Z	PITCH	YAW	ROLL	PL ID
-275	-564	-357	181	12	179	2
SY	SP	EP	WP	WY	WR	
+61.9	+65.2	-91.6	-46.8	+8.3	+124.9	

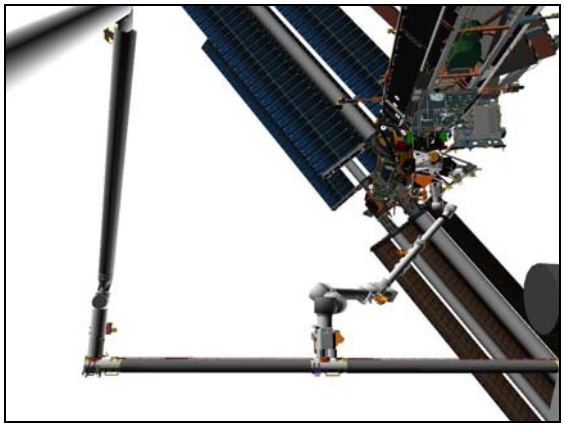

CCTV A (80,10)

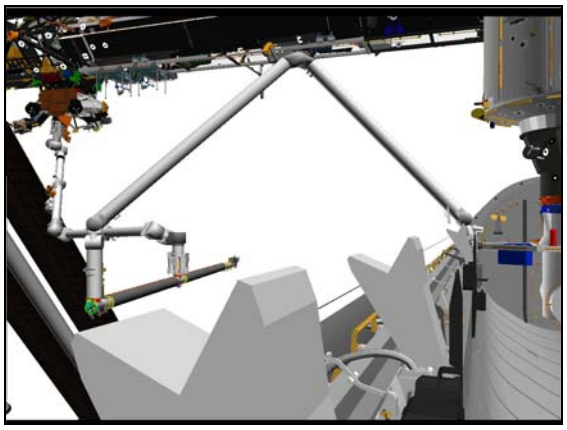

CCTV B (-20,0)

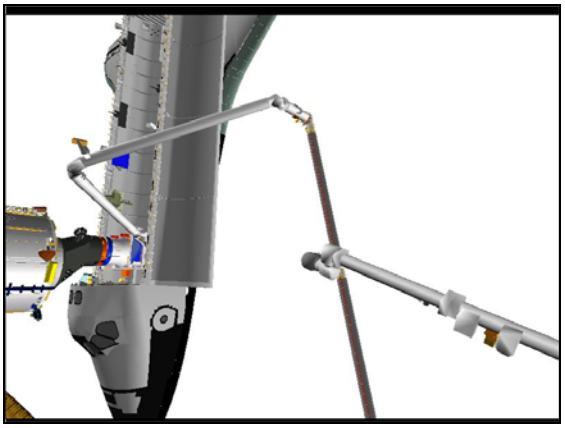

P1 LOOB (140,10)

2. SENSOR TEMP CHECKS AND DEACTIVATION

NOTE
Do not terminate LCC application on PGSC

LDRI Final Temp Check:
A7U MON1 ← PL 2
√LDRI MODE 3 pb lit
LDRI TEMP _____
GMT _____

ITVC Final Temp Check:
A7U MUX 1L ← MIDDECK
LDRI MODE 1 pb - push (ITVC video)
ITVC TEMP _____
GMT _____

On SSRMS Operator GO for OBSS Ungrapple,

R12 (OBSS) ITVC ENABLE – OFF
Wait 10 sec

SPEE PWR– OFF
A15 APCU 2 CONV – OFF

SM 179 POWER TRANSFER
√PTU 2 APCU OUT VOLTS:<10V

A15 APCU 2 OUTPUT – OFF

3. OBSS UNGRAPPLE

A7U CCTV – config for ungrapple
– RMS WRIST, ZOOM: 34.0 HFOV
FOCUS: 5 ft

NOTE
CONTR ERR lt and 'S96 PDRS CNTL' msg may occur due to Consistency/Envelope Check error

RHC RATE – COARSE (RATE MIN tb-OFF)

SM 94 PDRS CONTROL
AUTO BRAKE INH – ITEM 10 EXEC (*****)

BRAKES – OFF (tb-OFF)
MODE – TEST, ENTER
Wait 5 sec

BRAKES – ON (tb-ON)

SM 94 PDRS CONTROL

AUTO BRAKE ENA – ITEM 9 EXEC (*****)
PL ID – ITEM 3 +0 EXEC
INIT ID – ITEM 24 +0 EXEC

RHC RATE – VERN (RATE MIN tb-ON)
BRAKES – OFF (tb-OFF)
MODE – END EFF, ENTER

CAUTION
Monitor EE tb timing to prevent EE motor burnout

EE MODE – AUTO
RELEASE sw – depress (mom)

When OPEN tb – gray, mnvr arm clear of grapple pin

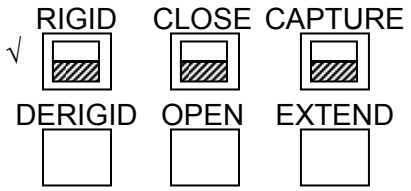

CRITICAL TIMES (28 sec total):
DERIGID tb – gray, 5 sec max, then
OPEN tb – gray, 3 sec max, then
EXTEND tb – gray, 20 sec max

Mnvr to PORT HANDOFF PRE-GRAPPLE posn:

X	Y	Z	PITCH	YAW	ROLL	PL ID
-853	-444	-436	270	359	169	0
SY	SP	EP	WP	WY	WR	
+60.2	+74.6	-89.6	-58.5	+8.8	+126.5	

EE MODE – OFF

BRAKES – ON (tb-ON)

4. EVA 4 VIEWING POSN

MON 1	A
MON 2	B (Elbow)
DNLK	P1 LOOB

SM 94 PDRS CONTROL

END POS – ITEM 18 -9 3 5 -5 0 9 -6 0 3 EXEC
ATT – ITEM 21 +8 8 + 4 4 + 3 1 3 EXEC
CMD CK – ITEM 25 EXEC (GOOD)

RHC RATE – VERN (RATE MIN tb-ON)
BRAKES – OFF (tb-OFF)
MODE – OPR CMD, ENTER (READY lt on)

AUTO SEQ – PROCEED (IN PROG lt on)

When AUTO SEQ IN PROG lt – off:

OCAS MNVR posn:

	X	Y	Z	PITCH	YAW	ROLL	PL ID
√	-935	-509	-603	88	44	313	0
	SY	SP	EP	WP	WY	WR	
√	+50.0	+65.3	-68.8	+73.2	+14.1	+23.6	

NOTE

Minimum clearance SRMS-to-OBSS is 43 inches at SY=+76.0. RMS ELBOW and CCTV B may be used to monitor clearance.

MODE – SINGLE, ENTER

Mnvr to EVA 4 VIEWING posn:

	SY	SP	EP	WP	WY	WR	
OCAS Mnvr	+50.0	+65.3	-68.8	+73.2	+14.1	+23.6	
1: SP –		+21.8					
2: SY +	+94.9						
EVA 4 View	+94.9	+21.8	-68.8	+73.2	+14.1	+23.6	
	X	Y	Z	PITCH	YAW	ROLL	PL ID
	-624	-545	-206	159	70	204	0

BRAKES – ON (tb-ON)
√MODE – not DIRECT (lt off)
PARAM – PORT TEMP
JOINT – CRIT TEMP

Notify SSRMS operator SRMS at the EVA 4 Viewing posn

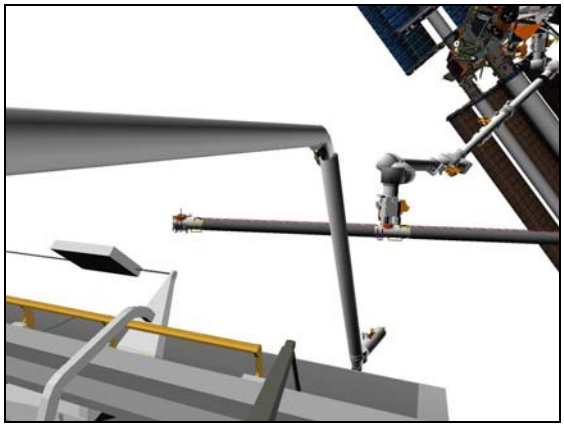

CCTV A (70,-10)

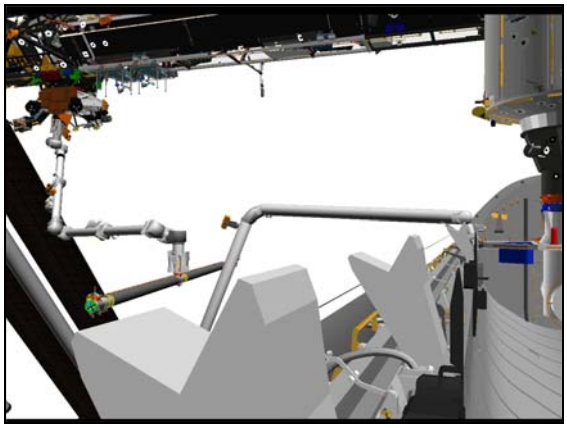

CCTV B (-20, 0)

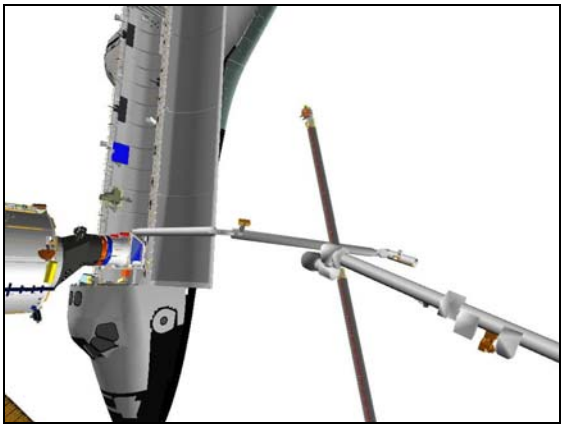

P1 LOOB (140,10)

FD12 POST-EVA OBSS HANDOFF TO SRMS

1. SETUP

SM 94 PDRS CONTROL
√PL ID, ITEM 3: 0
√INIT ID, ITEM 24: 0

MON 1	A
MON 2	P1 LOOB
DNLK	B (C)

Verify at EVA VIEWING posn:

X	Y	Z	PITCH	YAW	ROLL	PL ID
-624	-545	-206	159	70	204	0
SY	SP	EP	WP	WY	WR	
+94.9	+21.8	-68.8	+73.2	+14.1	+23.6	

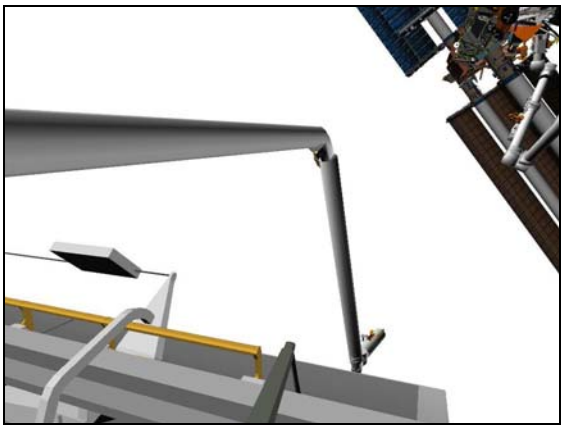

CCTV A (70,-10)

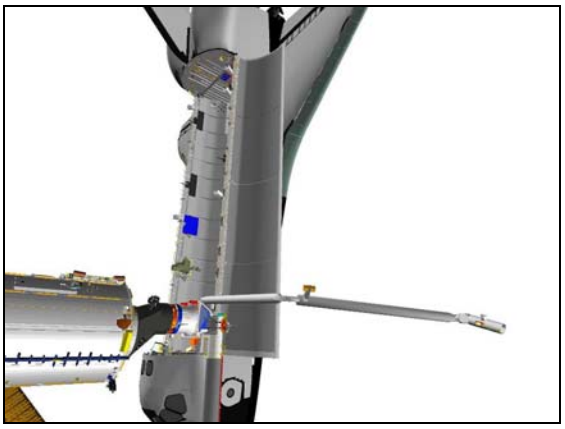

P1 LOOB (130,20)

2. MANEUVER TO PRE-GRAPPLE

On SSRMS Operator GO for maneuver to the OBSS Handoff Pre-grapple posn

SM 94 PDRS CONTROL
END POS – ITEM 18 -8 5 3 -4 4 4 -4 3 6 EXEC
ATT – ITEM 21 +2 7 0 +3 5 9 +1 6 9 EXEC
CMD CK – ITEM 25 EXEC (GOOD)

RHC RATE – VERN (RATE MIN tb-ON)
BRAKES – OFF (tb-OFF)
MODE – OPR CMD, ENTER (READY lt on)

AUTO SEQ – PROCEED (IN PROG lt on)

When AUTO SEQ IN PROG lt – off:
BRAKES – ON (tb-ON)

PORT HANDOFF PREGRAPPLE posn:

	X	Y	Z	PITCH	YAW	ROLL	PL ID
√	-853	-444	-436	270	359	169	0
	SY	SP	EP	WP	WY	WR	
√	+60.2	+74.6	-89.6	-58.5	+8.8	+126.5	

Notify SSRMS operator, SRMS is at OBSS Handoff Pre-Grapple position

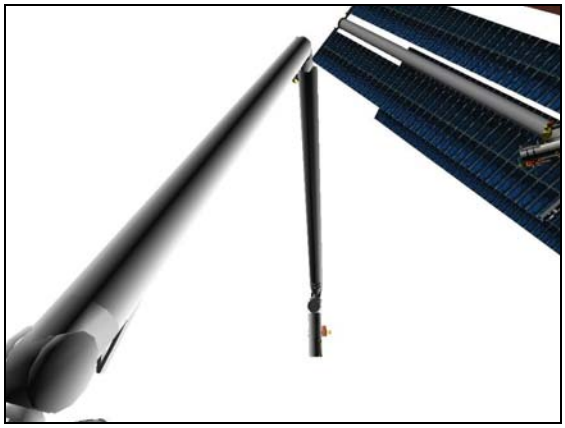

CCTV A (50,20)

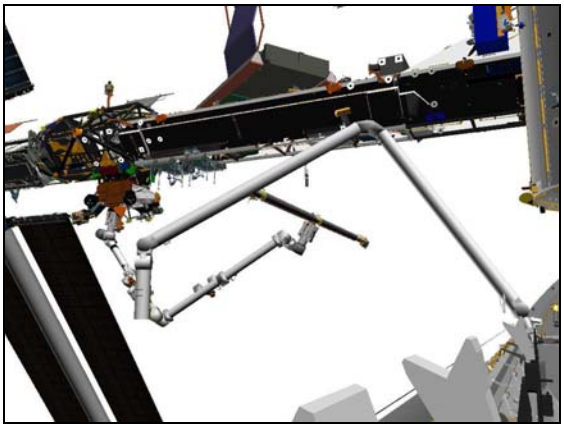

CCTV B (-25,10)

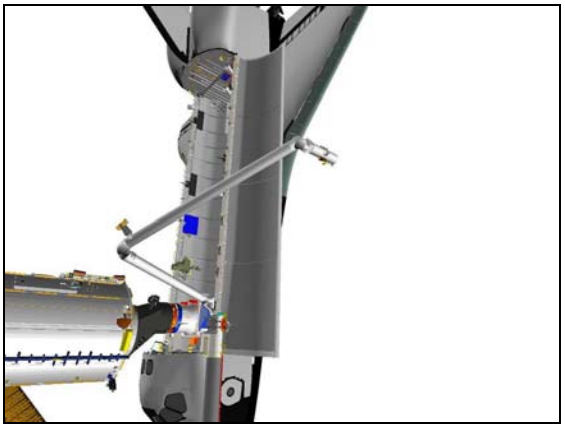

P1 LOOB (130,20)

3. <u>SETUP FOR GRAPPLE</u>

A7U CCTV – config for grapple
– install <u>PDRS TARGET OVERLAY FOR CTVM</u>
– RMS WRIST, ZOOM: 34.0 HFOV
FOCUS: 5 ft

Maintain eyepoint approx 18 in when using grapple overlay

MON 1	A
MON 2	EE
DNLK	B

R12(OBSS) √SPEE PWR – OFF
A15 √APCU 2 CONV – OFF

SM 179 POWER TRANSFER

√PTU 2 APCU OUT VOLTS: <10V

A15 √APCU 2 OUTPUT – OFF

4. OBSS GRAPPLE AT PORT HANDOFF POSN
On SSRMS Operator GO for SRMS OBSS Grapple,

RHC
RATE – VERN (RATE MIN tb-ON)
BRAKES – OFF (tb-OFF)
MODE – END EFF, ENTER

Mnvr to grapple envelope

CAUTION
Monitor EE tb timing to prevent EE motor burnout

EE MODE – AUTO
CAPTURE sw – depress (mom)

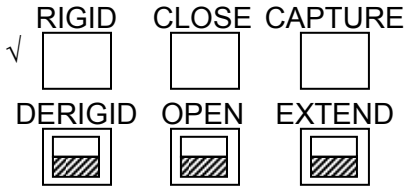

CRITICAL TIMES (28 sec total):
CAPTURE tb – gray, then
CLOSE tb – gray, 3 sec max, then
RIGID tb – gray, 25 sec max

EE MODE – OFF

MODE – TEST, ENTER
Wait 5 sec

BRAKES – ON (tb-ON)

SM 94 PDRS CONTROL

PL ID – ITEM 3 +2 EXEC
INIT ID – ITEM 24 +2 EXEC

Expected PORT HANDOFF posn:

	X	Y	Z	PITCH	YAW	ROLL	PL ID
√	-275	-564	-357	181	12	179	2
	SY	SP	EP	WP	WY	WR	
√	+61.9	+65.2	-91.6	-46.8	+8.3	+124.9	

PARAM – PORT TEMP
JOINT – CRIT TEMP

CCTV A (55,10)

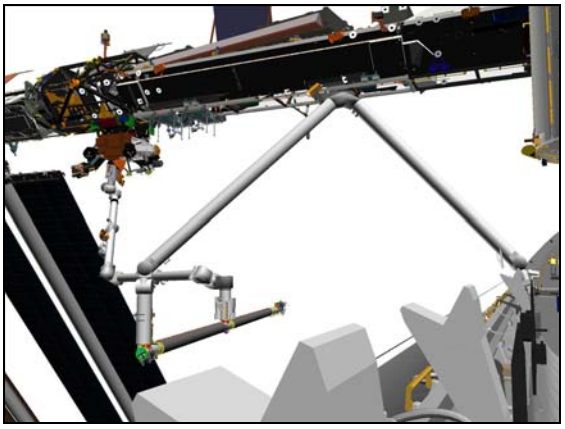

CCTV B (-25,5)

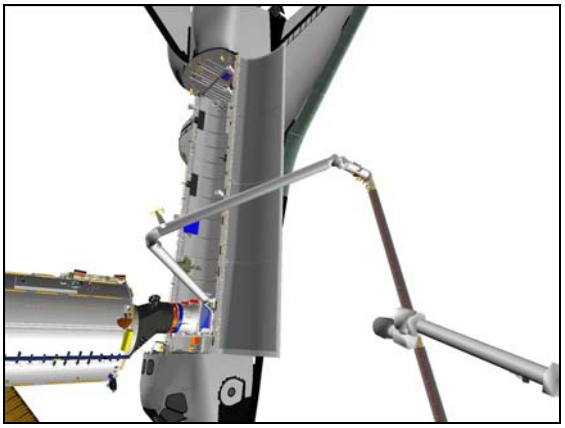

P1 LOOB (130,20)

R12 (OBSS) RSC PWR – OFF, ON
SPEE PWR – ON

A15 √PTU 2 tb - ON
APCU 2 OUTPUT - ON
CONV – ON

SM 179 POWER TRANSFER
√PTU 2 APCU OUT VOLTS: 123V to 126V
√OUTPUT - ON

Give SSRMS Operator GO for OBSS Ungrapple

Review GENERIC END EFFECTOR CUE CARD – ISS/SHUTTLE DOCKED OPS

5. <u>MANEUVER TO UNDOCK</u>

On SSRMS Operator GO for SRMS Maneuver to UNDOCK,

MON 1	A (Elbow)
MON 2	P1 LOOB
DNLK	C (B)

RATE – as required (VERN within 10 ft)
BRAKES – OFF (tb-OFF)
MODE – SINGLE, ENTER

Mnvr to UNDOCK posn:

	SY	SP	EP	WP	WY	WR	
Port Handoff	+61.9	+65.2	-91.6	-46.8	+8.3	+124.9	
1: WY –					-25.0		
2: WR –						-6.9	
3: EP +			-49.0				
4: SY –	+25.8						
5: SP +		+66.3					
6: WR –						-100.7	
7: WY +					+10.7		
8: WP –				-85.9			
Undock	+25.8	+66.3	-49.0	-85.9	+10.7	-100.7	
	X	Y	Z	PITCH	YAW	ROLL	PL ID
	-1029	+229	-614	14	270	0	2 *

*display singularity

BRAKES – ON (tb-ON)
PARAM – PORT TEMP
JOINT – CRIT TEMP

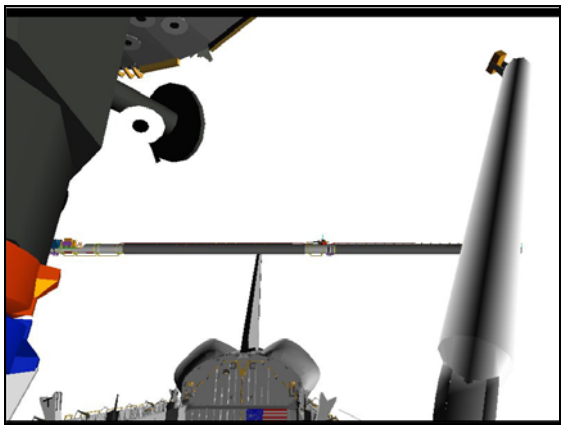

CCTV A (0,25)

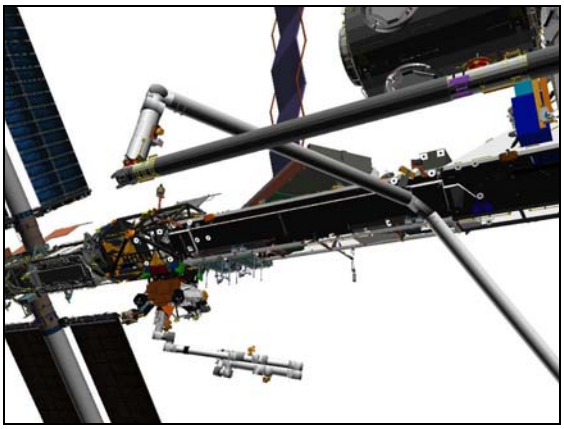

CCTV B (-30,20)

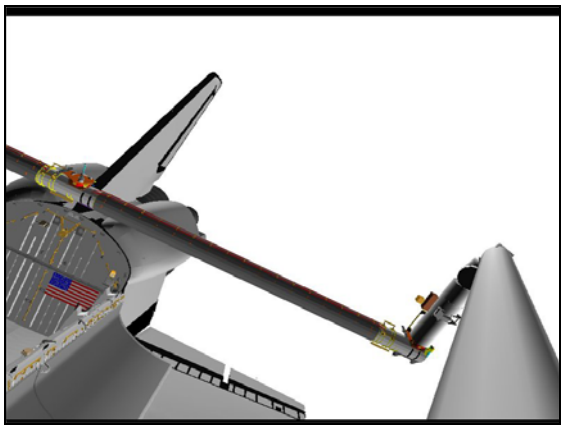

RMS ELBOW (-30,0)

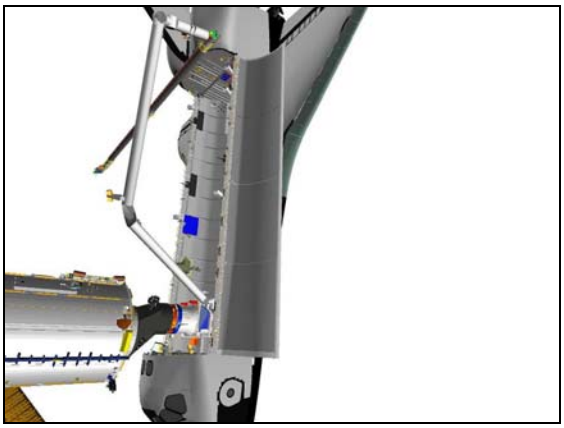

P1 LOOB (130,20)

6. <u>SENSOR PACKAGE 2 ACTIVATION</u>

A31p(LCC) √Comm - green

If Comm status not correct:

Perform LCC ACTIVATION (<u>LCS</u> Cue Card, P/TV), step 2

Good morning Doug, Stephanie, and Dan,

Have a great EVA day and we're looking forward to closing out transfer on FD13. Even though there is no generic transfer time scheduled today, you'll need to incorporate today's change-pages for which include new items for today's choreography item (see below). These new items are the reconfigured EVA camera left outside, which will be inspected and reconfigured post EVA for return.

The Transfer List Excel file, FD12_TransferList_STS120.xls, is located on the KFX machine in **C:\OCA-up\transfer**.

For ISS, the Transfer List Excel file, FD12_TransferList_STS120.xls, is located in **K:\OCA-up\transfer**.

<u>Transfer Notes</u>

- I bet you never thought it would happen ☺ but we've changed our mind again on Return Item 403.5. Previously we asked you to remove it from return bag 403. After additional discussion on the ground, the 'unexplained event' for this lens on the earlier EVA makes it 'no-go' for EVA in the future, so they'd like it on the ground. So, even though we told you earlier it was fine, it is, indeed, going to come home. The item has been added back to the transfer list as item 403.5. We apologize for the inconvenience.
- We really appreciate your thorough response about both the baseplates and T-bars in the A/L Floor bag. Based on your comments, we've exonerated the returning baseplate configuration. We're still a little baffled by the report of the T-Bar with S/N 1088. We realize there was no reason to have transferred the T-bars so we are fairly confident that these are indeed the right ones returning. Just to be absolutely sure we're not missing something we've included a 10A bench review picture of T-bar S/N 1002 and where we expect the S/N 1002 to be located on the hardware. We will re-evaluate the return plan and verify we are in a good T-bar configuration based on your response. Thanks!

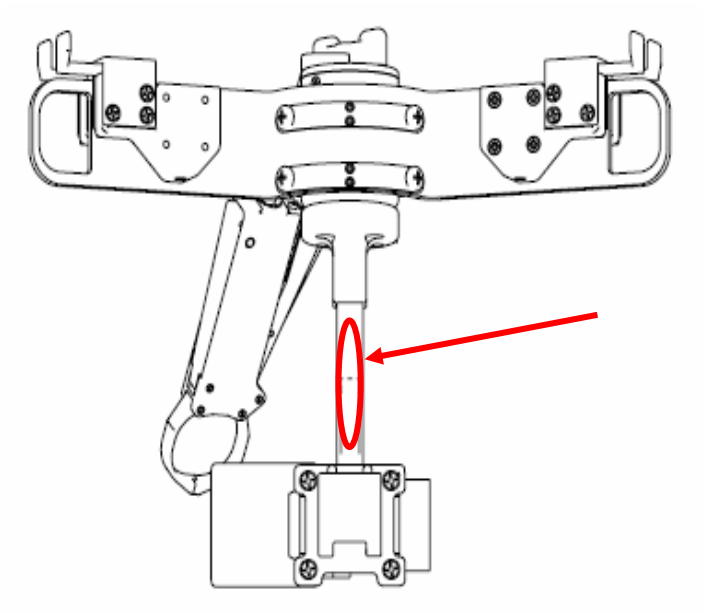

Questions/Answers for the crew

- **Q:** From yesterday's transfer conference, do you have an update on if the contents of the two 0.5 CTBs of Russian crew preference items will fit into the IELK 5 MLE bag?

Open items for transfer today:

- **Item 818, 819, 821, 821.1 thru 821.4 –** Transfer after P/TV-CAM DEACT-STOW activity on the timeline (message 16-0172 EVA CAMERA WITH FLASH INSPECTION), which inspects and configures camera after it's brought internal during the EVA.

Please incorporate uplink pages as follows:

In **RESUPPLY** tab
Replace Page(s):
Resupply – 1

In **RSPLY REALTIME ADDITIONS** tab
Replace Page(s):
Resupply - 18

In **SWAP** tab
Replace Page(s):
Swap – 7

In **RETURN** tab
Replace Page(s):
Return – 3 (no changes to this page – page break correction)
Return – 4
Add Page(s):
Return – 3A (behind page 3)
In **RTN REALTIME ADDITIONS** tab
Add Page(s):
Return – 18
Return – 19
Return – 20
Return – 21
Return – 22

<u>Changes to the Transfer List are detailed below:</u>

In **RESUPPLY** tab
Item 104: Updated **Constraints**
Item 105: Updated **Constraints**

In **RSPLY REALTIME ADDITIONS** tab
Item 901: **New Item**

In **SWAP** tab
Item 143: Updated **Constraints**
Item 706: Updated **Constraints**

In **RETURN** tab
Item 403.5: Updated 'Initial Stowage' location, Updated 'Stowage at Undock' location, Updated **Constraints,** Updated **Comments
Item 403.6: Updated 'Item Name'**,** Updated 'Initial Stowage' location, Updated 'Temp Stowage' location, Updated **Constraints**

In **RTN REALTIME ADDITIONS** tab
Item 813: **New Item**
Item 814: **New Item**
Item 815: **New Item**
Item 816: **New Item**
Item 817: **New Item**
Item 818: **New Item**
Item 819: **New Item**
Item 820: **New Item**
Item 821: **New Item**
Item 821.1: **New Item**
Item 821.2: **New Item**
Item 821.3: **New Item**
Item 821.4: **New Item**
Item 900: **New Item**

Call us with any questions and have a great day! - The 10A Transfer Team

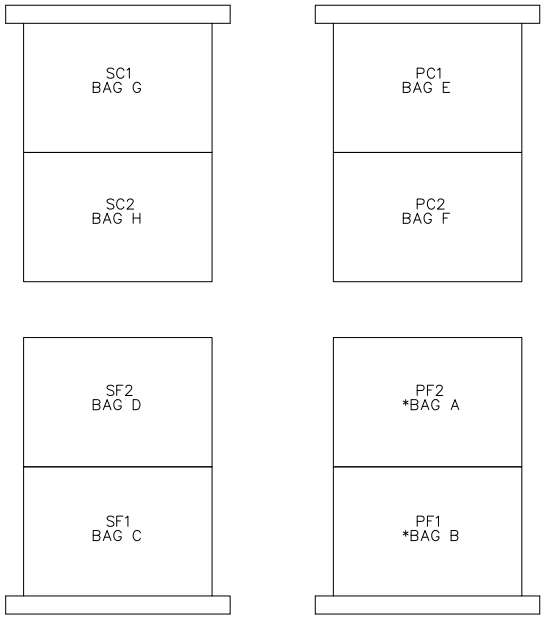

DITCH VIEW LOOKING AFT
*NOTE BAGS A AND B SWAP LOCATIONS FOR RETURN
BAGS ARE ALL WEIGHT AND CG CONSTRAINED

- Preference for unused cushion is to return in the bag it was launched in or in another bag to help protect hardware/used as filler. Any cushion that does not fit can be stowed in a jettison stowage bag and placed behind the middeck retention net (up to 20 lbs). Do not stow any additional cushion in the A/L aside from what was pre-planned (DCTB w/cushion).
- There are 2 CWCs you need to stow for return. One goes back in MF71M and the other can go in MF43M (tray where the towels were).
- Reminder to stow the logbooks and Actiwatches in MF57K (Post Insertion 2) for return.

EXTERNAL AIRLOCK FLOOR BAG

Same as launch config minus the Mounting Strip Assy which were transferred.

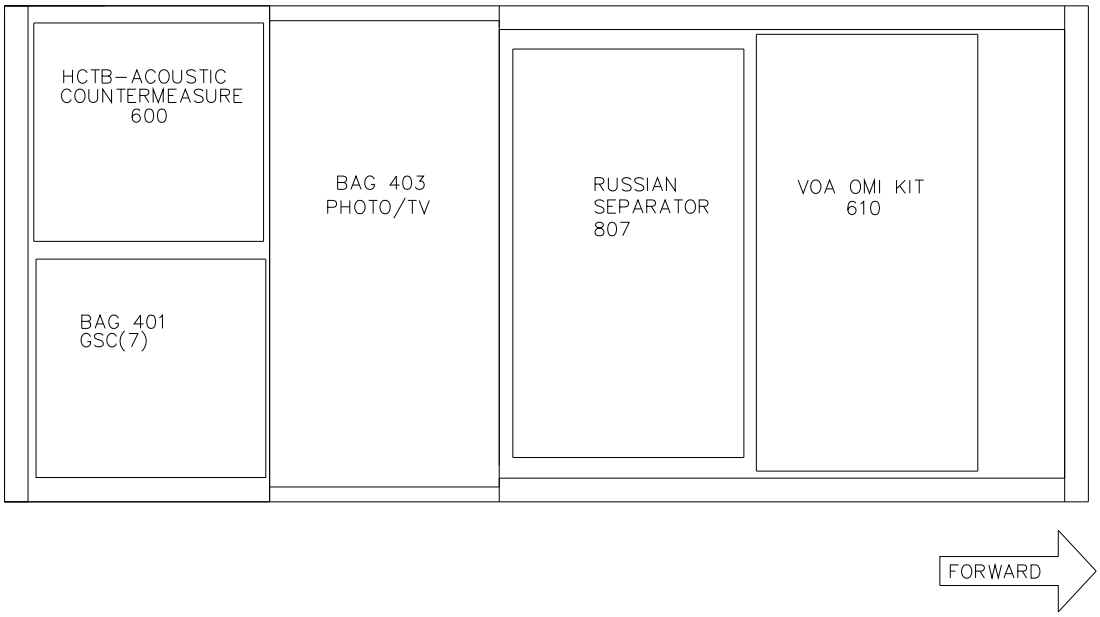

PF1 (BAG B)

Do your best to put cushion around the Russian Separator. The OCA Cable, Nada Chairs(2) and CDK all move to Bag E. The cushion containing these 3 items can be stowed in this bag or moved to another bag where volume is available.

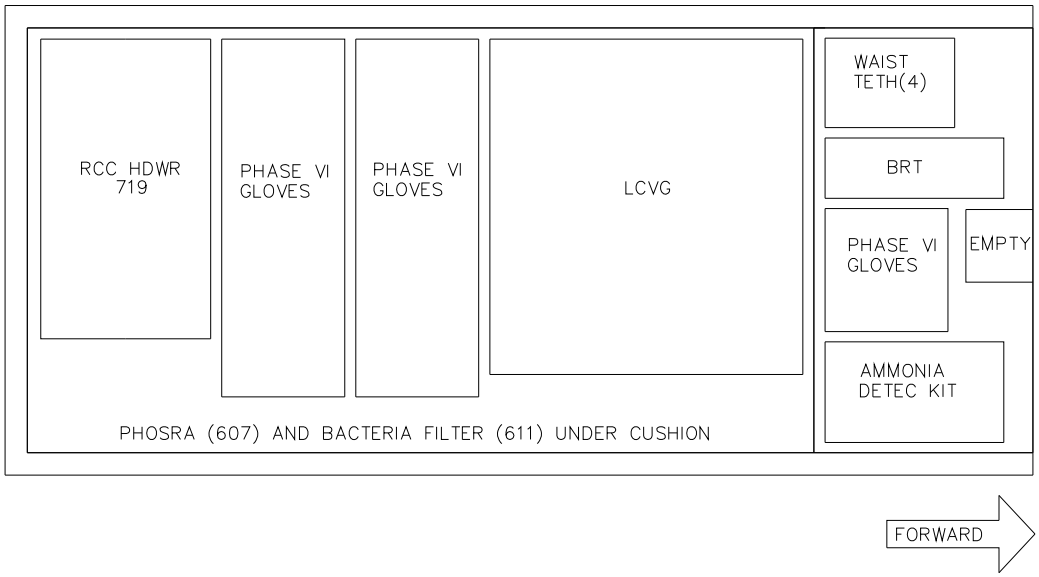

PF2 (BAG A)

ECOK Contingency items place on top. The cushion containing Phosra will be stowed under the cushion. The Bacteria Filter is placed next to the Phosra.

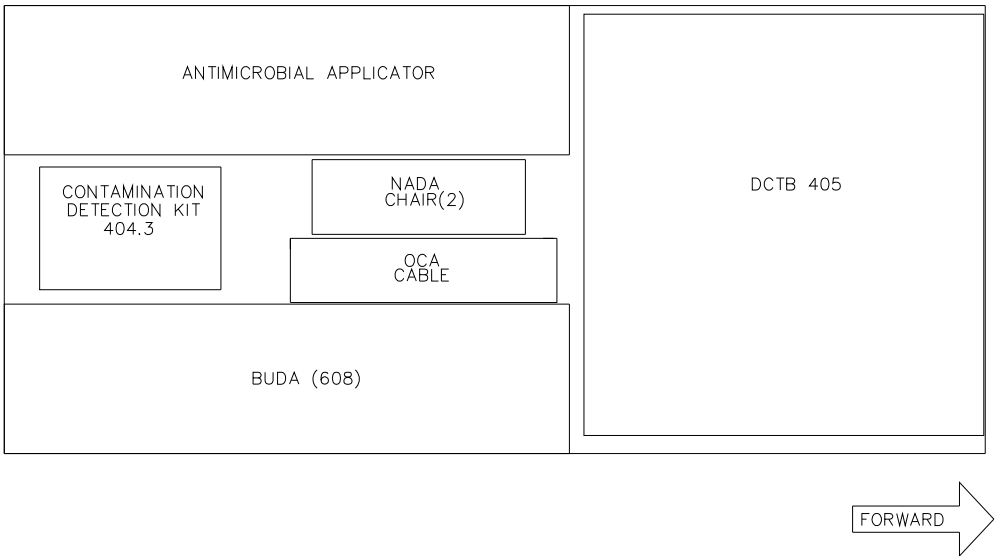

PC1 (BAG E)

SSU Covers/Wire Harness and empty Handrail Carrier can be placed on top of the BUDA and Antimicrobial Applicator. The CDK (w/SARJ shavings) and OCA cable should be wrapped in towel for protection.

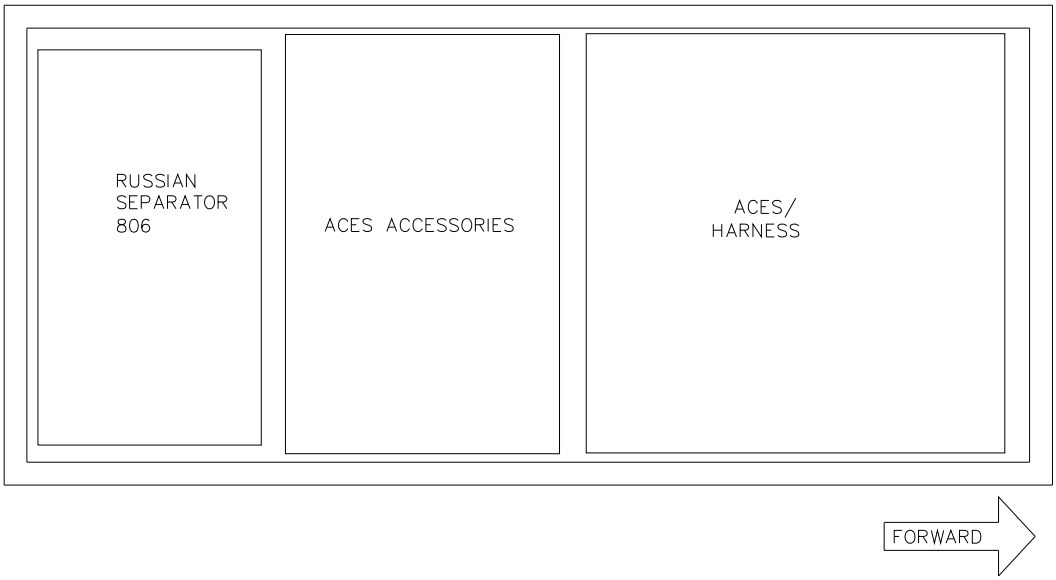

PC2 (BAG F)

Stow the Harness underneath the ACES suit and make sure there is cushion to protect the Harness canisters. Arrange cushion pieces around the Russian Separator.

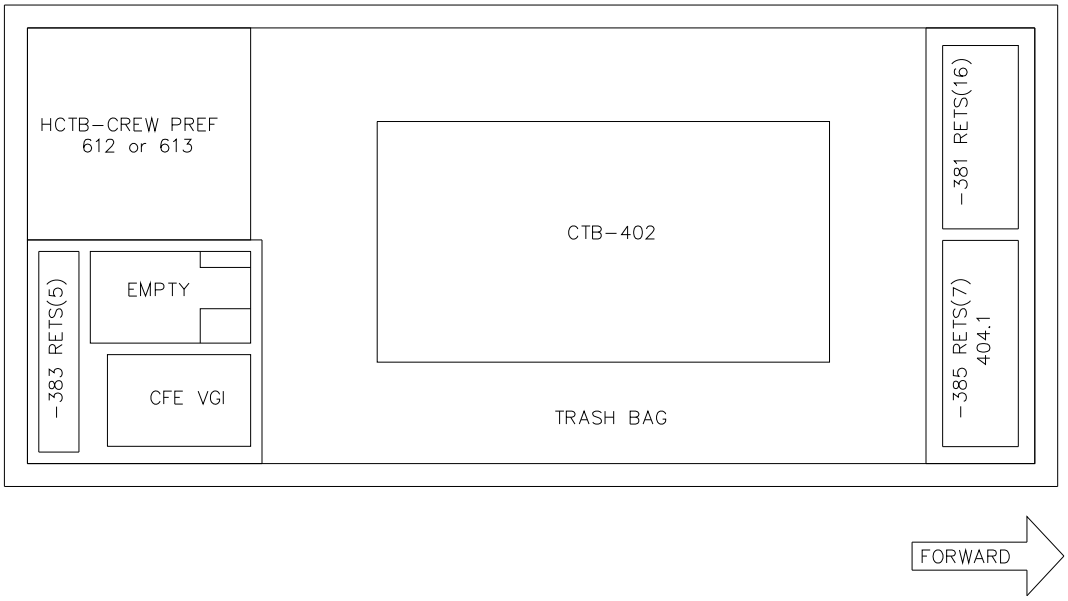

SF2 (BAG D)

The large trash bag will have to be moved out of its launch cutout and placed next to CTB 402. CFE VGI will go in this cutout. Spare cushion can be placed around the CTB.

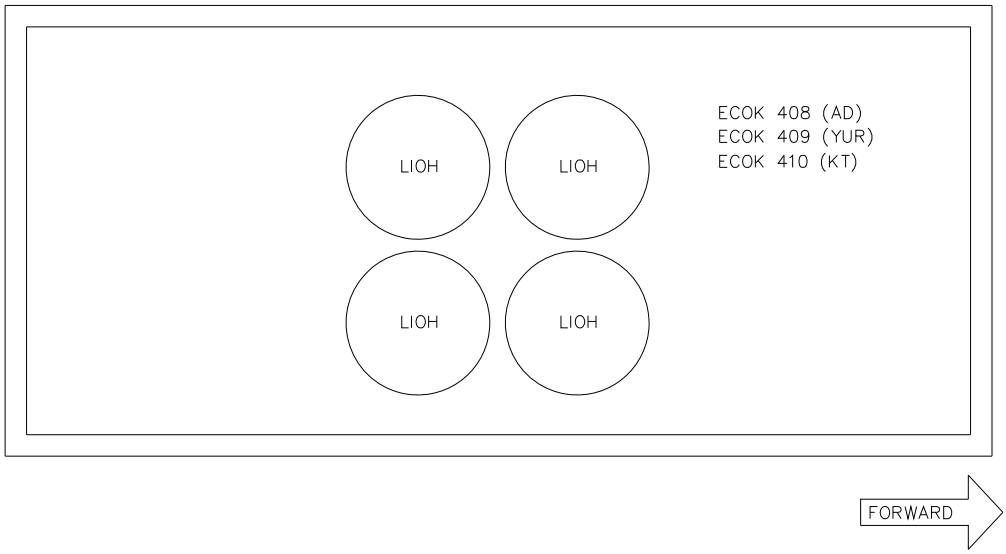

SF1 (BAG C)

Center the LiOH cans and arrange the 3 ECOKs around them. Wrap each LiOH can in a towel to prevent metal to metal contact. If any cushion does not fit, it can be moved to another bag or placed behind the retention net.

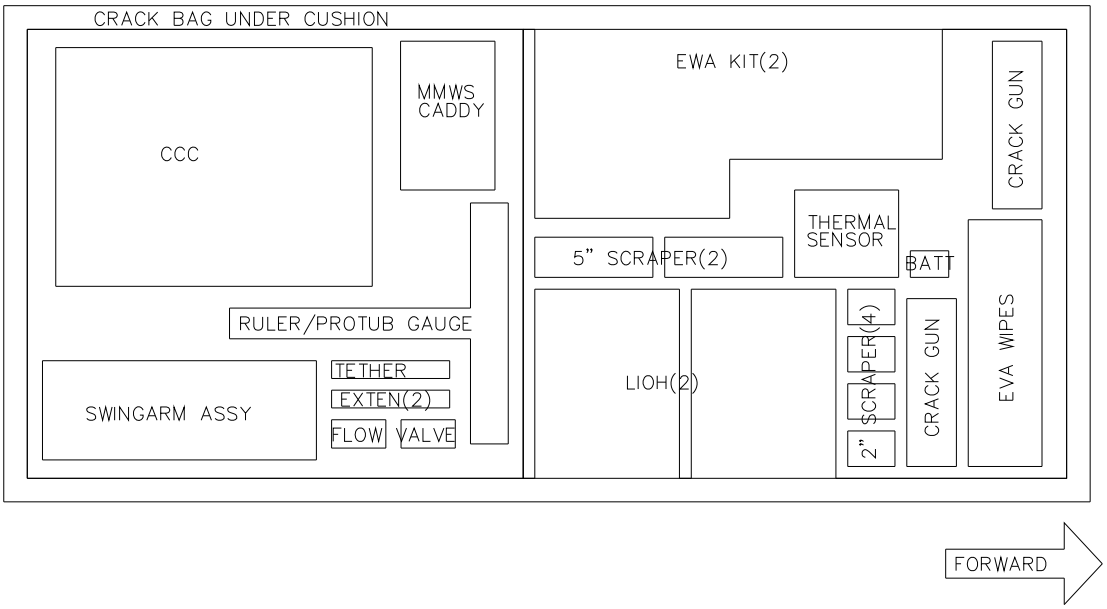

SC1 (BAG G)

The only delta to this bag is the transfer of the 2 Gel Brush Kits. EVA wipes may also have been used. 2 LiOH Cans can be stowed in place of the Gel Brush kits. The thin strip of cushion that separated the Gel Brush Kits will likely need to be ripped to accommodate the cans. Wrap the cans in towels to prevent metal to metal contact.

SC2 (BAG H)

IELK is stowed the same as launch configuration. The recently added Russian crew pref items may be packed around the IELK. If there is any overflow of crew pref, put in a jettison stowage bag and stow behind the retention net (soft goods only). These items and any additional cushion added need to be considered in the 20 lb middeck retention net limit.

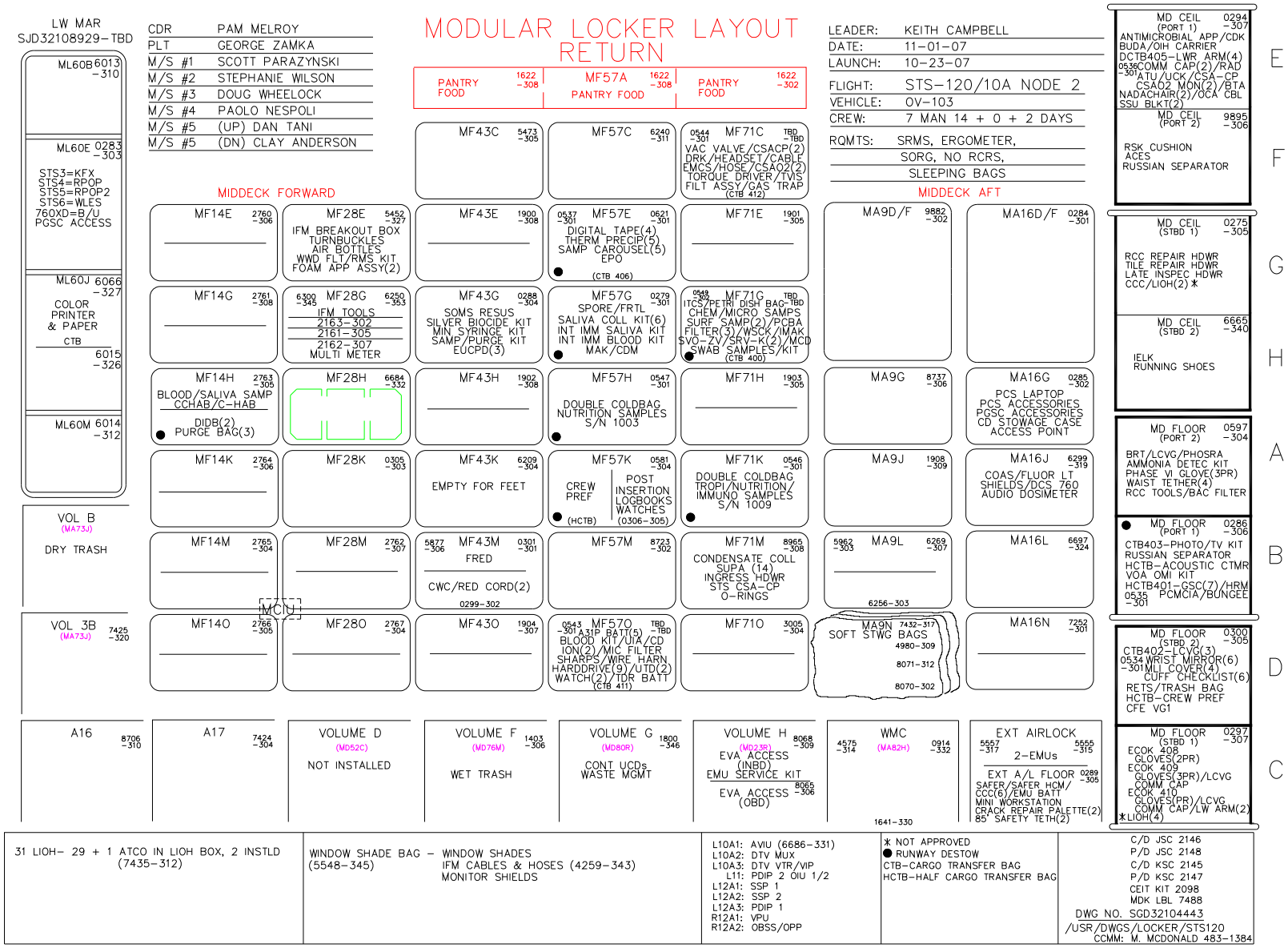

Only locations that change or involve transfer are shown

EVA CHEST 12/PP/F/11

FOR
+X
+Z

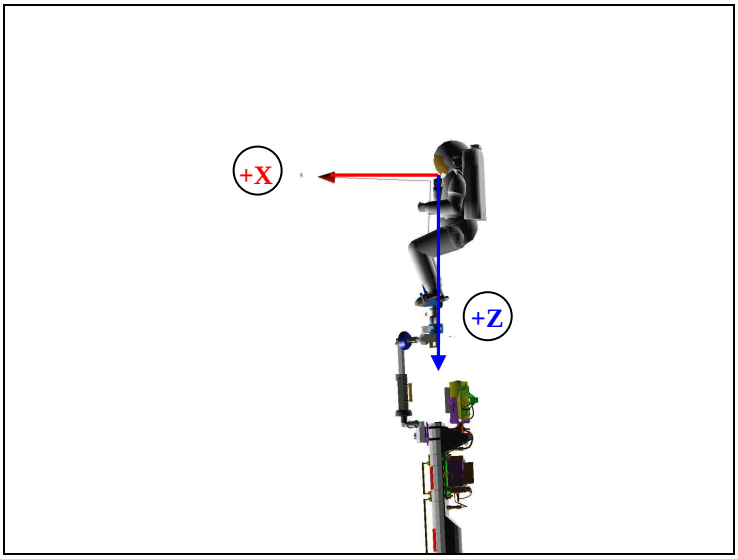

FOR
+Y
+Z

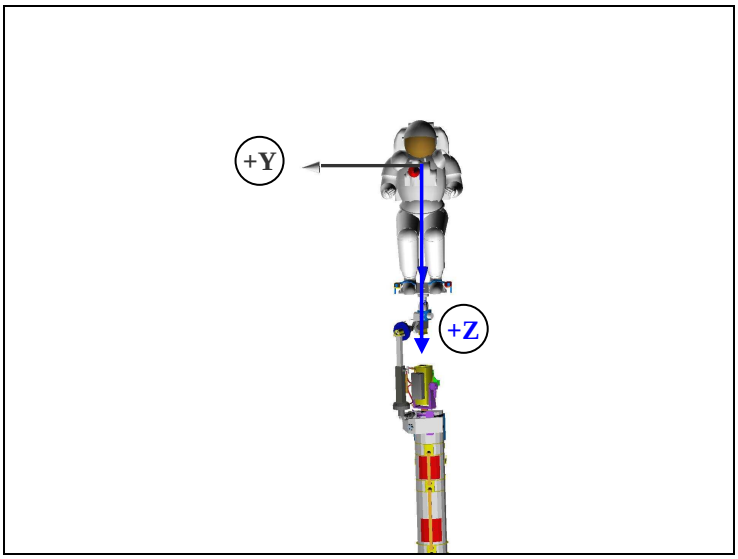

<u>Location</u>:
Located at center of the EVA chest. WIF extender settings are 12/M/7, and APFR settings are 12/PP/F/11.

EVA Ingress

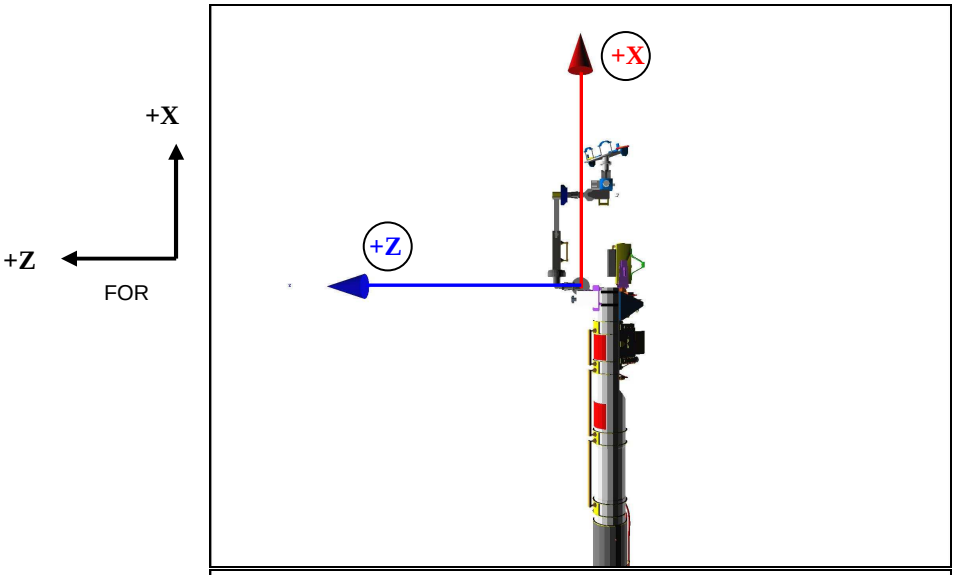

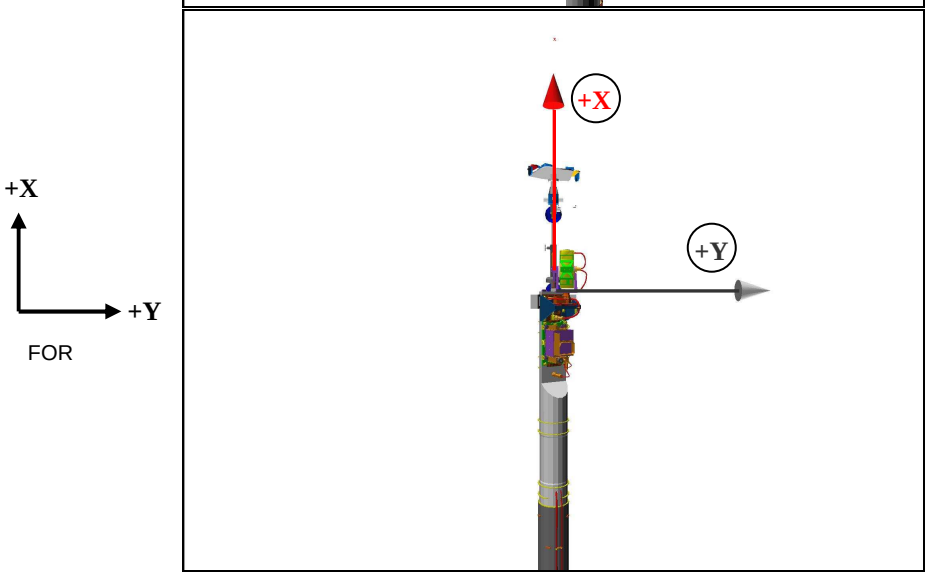

FLIGHT DAY 3 DOCKING
ORBITER with ISS
CO2 ABSORBER REPLACEMENT

(7 crewmembers/Single Shift/FD 1-19)

FLIGHT DAY	POS A	POS B	CK CMPLT
LAUNCH	1	2	
PRE FD01	“	“	
POST FD02	3	4	
PRE FD02	“	5	
POST FD03	6	7	DOCKING
PRE FD03	8	“	
POST FD04	“	“	EVA1
PRE FD04	“	9	
POST FD05	“	“	
PRE FD05	10	“	
POST FD06	“	“	EVA2
PRE FD06	“	11	
POST FD07	“	“	
PRE FD07	12	“	
POST FD08	“	“	EVA3
PRE FD08	“	13	
POST FD09	“	“	
PRE FD09	14	“	
POST FD10	“	“	
PRE FD10	"	121-32	
POST FD11	"	"	
PRE FD11	121-33	"	
POST FD12	"	121-35	EVA4
PRE FD12	121-36	“	
POST FD13	"	"	
MID FD13	121-37	121-38	HATCH CLOSE
PRE FD13	“	"	
POST FD14	121-39	121-40	UNDOCK
PRE FD14	121-41*	15*	
POST FD15	16	17	
PRE FD15	“	18	
POST FD16	19	20	EOM
PRE FD16	21*	22*	
POST FD17	23	24	EOM+1
PRE FD17	25	“	
POST FD18	26	27	EOM+2
PRE FD18	28*	29*	
POST FD19	30	31	EOM +3

*Re-bag and seal LiOH cans w/ Gray Tape and stow.
(Locations of canisters on back)

NOTE

This card is specifically used for the STS-120 mission with the orbiter conducting single shift ops with a crew size of 7. Changeout scheme reflects FD3 docking with ISS, Vozdukh and CDRA (activated in dual-bed mode) during docked ops, and undocking on FD14. ODS hatch closure will be worked the day before undocking.

Back of LiOH Cue Card

BACK OF 'FLIGHT DAY 3 DOCKING ORBITER with ISS CO2 ABSORBER REPLACEMENT'

LIOH CANISTER STOWAGE LOCATIONS

ASCENT STOWAGE LOCATIONS

Orbiter:
MD52M (LiOH Box): Cans 1-31*****

ENTRY (EOM) STOWAGE LOCATIONS

Orbiter:
MD52M (LiOH Box): Cans 10-31, STS-121 cans 32, 33, 35-41

*****2 LiOH cans installed in LiOH slots A and B