STS-120 / 10A

FD 07 Execute Package

MSG	Page(s)	Title
066A	1 - 13	FD07 Flight Plan Revision **(pdf)**
065	14 - 15	FD07 Mission Summary **(pdf)**
062B	16	FD06 MMT Summary **(pdf)**
63	17 – 20	FD07 EVA Deltas **(pdf)**
064	---	FD07 MS4 Ham Pass with IIS Deambrosis-Natta & University of L'Aquila **(pdf – Electronic Only)**
067	---	FD07 PAO Event Summary **(pdf – Electronic Only)**
068	---	10A EVA3 Port SARJ Inspect **(pdf – Not Distributed)**

Approved by FAO: *Roger Smith*

Last Updated: Oct 29 2007 3:46AM GMT
JEDI *(**J**oint **E**xecute package **D**evelopment and **I**ntegration), v2.04.0003*

MSG INDEX

MSG NO.	TITLE
062	FD06 MMT Summary (16-0094)
063	FD07 EVA Deltas (16-0096)
064	FD7 MS4 Ham Pass with IIS Deambrosis-Natta & University of L'Aquila (16-0098)
065	FD07 Mission Summary (16-0099)
066	FD07 Flight Plan Revision
067	FD07 PAO Event Summary (16-0102)
068	10A EVA3 Port SARJ Inspect (16-0103)

1. After maneuvering the SRMS to pre-cradle on FD6 and deselecting RMS, the shoulder temps immediately started decreasing. Combined with the current ISS attitude, the temps are now acceptable. We are back to the nominal SRMS plan and request that RMS SELECT - OFF should be performed anytime the SRMS is at the pre-cradle position to keep the temps as low as possible.

2. **Shuttle Condensate Collection Details - Shuttle Crew**
   At MET 5/16:00, perform CHANGEOUT of SHUTTLE CONDENSATE COLLECTION (ORB OPS, ECLS) p. 5-36 using empty CWC s/n 5057 which can be found in MF71M. CWC s/n 5104 can be temp stowed as it will be dumped on FD9.

   Unused DIDB Stowage
   MCC would like for you to stow the two DIDB's filled with hot water on FD3 in MF14H after sealing each bag in a Ziploc. Please stow the bags in any available MF14H tray not containing the saliva and blood collection return samples.

3. Request for Scott concerning EVA 2 DCS 760 Camera without Flash,

   Photo/TV is continuing to troubleshoot the EVA Camera issues from EVA 2. Please clarify if you had any positive indications that your DCS 760 camera (Camera without Flash) was taking pictures (i.e. Shutter Release, Mirror Flip Up or Light-Pipe Indication).

4. Last night we power cycled the DAIU and reset ICOM A from the ground. When time permits, please perform another comm check on ICOM A and advise MCC of the results.

5. The table below summarizes the Shuttle and ISS exercise constraints for today. These constraints are also denoted in your timelines for your reference.

Activity	Exercise Constraints	
	Shuttle	ISS
S1 Rad Deploys (during motion)	No exercise	No exercise
P6 Handoff (while both arms are grappled to P6)	No exercise	No exercise

6. REPLACE PAGES 2-22, 2-24, AND 3-68 THROUGH 3-77.

10/28/07 20:42:24 **REPLANNED**

GMT 10/29/07 (302)
β = -63
MET Day 005

12 13 14 15 16 17 18 19 20 21 22 23 006/00
04 05 06 07 08 09 10 11 12 13 14 15

STS-120	FD07	CDR MELROY: SLEEP; LOG; POST SLEEP; COND CWC C/O; PRLA; CLOSE; OFF DUTY; MEAL; RPRS*; N2 XFER TERM; RPRS*
STS-120	R1	PLT ZAMKA: SLEEP; LOG; POST SLEEP; P/TV 6; S/U SSRMS; P6 GRAPL; P/TV SSRMS; OFF DUTY; MEAL; P/TV SSRMS; P6 UNGPL; CWC #5; INIT
STS-120	MS1	PARAZYNSKI: SLEEP; LOG; ASOGRN; POST SLEEP; TERM*; EMU BATT INIT; EMU SWAP; OFF DUTY; MEAL; LIOH BATT; E/L PREP; EVA TOOL CONFIG; EXER CISE
STS-120	R2	MS2 WILSON: SLEEP; LOG; POST SLEEP; P6 GRAPL; MCIU^; OFF DUTY; MEAL; P6 UNGPL; EXERCISE
STS-120	MS3	WHEELOCK: SLEEP; LOG; POST SLEEP; EMU SWAP; OFF DUTY; MEAL; LIOH BATT; E/L PREP; EVA TOOL CONFIG
STS-120	MS4	NESPOLI: SLEEP; LOG; SALVA; CDM*; POST SLEEP; SALEP; SALVA; POST SLEEP; CDM BATT; HAM; RADIO; OFF DUTY; SALVA; MEAL; METX#; E/L PREP; EVA TOOL CONFIG; SALVA
STS-120	M2	FE-2 DN ANDERSON: SLEEP (8.5); POST SLEEP; PREP; WORK; DPC; CAMRAT; DEACT; NO FLASH CNFG; P6 UNGRP; MNVR SSRMS MT TRANS; EXER RED; OFF DUTY; MIDDAY-MEAL; P6 GRAPPLE FROM SRMS; CNFG W/FLASH; EXER TVIS
EXP 16	ISS CDR	WHITSON: SLEEP (8.5); POST SLEEP; PREP; WORK; DPC; EMU RESIZE; STAT; EXERCISE CEVIS; OFF DUTY; MIDDAY-MEAL; ND2 AV RACK OUTFIT
EXP 16	FE-1	MALENCHENKO: SLEEP (8.5); POST SLEEP; PREP; WORK; DPC; ИМП-1; ORIENTATION; EXERCISE TVIS; БСПН; ВЗДУХ; БФ CO2 MNT; PFC; OFF DUTY; D/L; OFF DUTY; MIDDAY-MEAL; РБО 3-2; N2 XFER TERM; COЖ MNT; EXER RED
UP	M1	FE-2 UP TANI: SLEEP (8.5); POST SLEEP; PREP; WORK; DPC; EMU RESIZE; P6 UNGRP; MNVR SSRMS MT TRANS; ADAPTATION; OFF DUTY; MIDDAY-MEAL; P6 GRAPPLE FROM SRMS; ND2 AV RACK OUTFIT

DAY/NIGHT

ORBIT: 88 89 90 91 92 93 94 95

TDRS: W -171; E -46; Z -275

ORB ATT: BIAS -XLV -ZVV

SSRMS: PDGF3 WS4 — XLATE — PDGF3 WS8

NOTES:
- *DEACT: No Exercise S1 RAD1 Deploy; No Exercise S1 RAD3 Deploy
- *BSA ^FILTER CK: 2-22 No Exercise while both arms grappled
- FLT PLN/120/FLIGHT
- *N2 INIT #TERM: No Exercise while both arms grappled
- *N2 TERM

10/28/07 20:42:24 **REPLANNED**

GMT 10/29/07 (302) β = -64 MET 006/00 Day 006

16 17 18 19 20 21 22 23 10/30 01 02 03 01 02 03 04 05 06 07 08 09 10 11 12

STS-120	**FD07** CDR MELROY	H/O; MNVR; TEAM*; HOAMUT	EVA PROCEDURE REVIEW	PAO EVENT	PRE SLEEP	PMC A/G	PRE SLEEP	SLEEP **ISS EXTERNAL SURVEY**						
STS-120	PLT ZAMKA	CWC #5; TERM; CWC; XFER	EVA PROCEDURE REVIEW	ILUM	PRE SLEEP	CREW CHOICE D/L	PRE SLEEP	SLEEP						
STS-120	MS1 PARAZYNSKI	EXER CISE	PRE SLEEP	EVA PROCEDURE REVIEW	PRE SLEEP	MASK PB/TOOL CONFIG	PRE SLEEP	SLEEP (A/L)						
STS-120	MS2 WILSON	P/TV 05 S/U	EVA PROCEDURE REVIEW	PAO EVENT	PRE SLEEP	SLEEP								
STS-120	MS3 WHEELOCK	PRE SLEEP	EVA PROCEDURE REVIEW	PRE SLEEP	MASK PB/TOOL CONFIG	PRE SLEEP	SLEEP (A/L)							
STS-120	MS4 NESPOLI	EXERCISE	EVA PROCEDURE REVIEW	PRE SLEEP	MASK PB/TOOL CONFIG	PRE SLEEP	SALVA	SLEEP						
STS-120	FE-2 DN ANDERSON	EXER TVIS; IWIS; RESET; DPC	EVA PROCEDURE REVIEW	PAO EVENT	PRE SLEEP	SLEEP (8.5)								
EXP 16	ISS CDR WHITSON	ND2 AV RACK OUTFIT; S/U; DPC	EVA PROCEDURE REVIEW	PAO EVENT	PRE SLEEP	SLEEP (8.5)								
EXP 16	FE-1 MALENCHENKO	EXER RED; CHRG; DPC	EVA PROCEDURE REVIEW	EXER; PAO EVENT	PRE SLEEP	SLEEP (8.5)								
UP	FE-2 UP TANI	ND2 AV RACK OUTFIT; DPC	EVA PROCEDURE REVIEW	PAO EVENT	PRE SLEEP	SLEEP (8.5)								

DAY/NIGHT

ORBIT: 95 96 97 98 99 100 101 102 103

TDRS: W -171; E -46; Z -275

ORB ATT: BIAS -XLV +ZVV

SSRMS: PDGF3 WS8

NOTES: *ISS +XVV

STS-120 FD07

REPLANNED

GMT Date 10/29 (302) | W | TDRSE | Z | ORB | MET Day 005 | STS ATI

CDR MELROY | **R1** PLT ZAMKA | MS1 PARAZYNSKI | Notes

12:00 | 04:00 | 05:00 | 06:00 | 07:00 | 13:00 | 14:00 | 15:00 | 16:00

ORB: 88, 89, 90

BIAS-XLV-ZVV

SLEEP (CDR MELROY)

SLEEP (PLT ZAMKA)

SLEEP (MS1 PARAZYNSKI)

FLIGHT SLEEP LOG (ORB OPS, SDBI)
POST-SLEEP ACTIVITY
(ORB OPS, CREW SYS)

FLIGHT SLEEP LOG (ORB OPS, SDBI)
POST-SLEEP ACTIVITY
(ORB OPS, CREW SYS)

FLIGHT SLEEP LOG (ORB OPS, SDBI)
TAKE 1 ASPIRIN (325mg)
POST-SLEEP ACTIVITY
(ORB OPS, CREW SYS)

FD07 EZ ACTIVITIES
OCAC Filter Inspect
Hard Reboot PGSCs (Except WLES and RPOP2)

P/TV06 SSRMS
(PHOTO/TV, SCENES)
Perform Setup

A8L RMS SELECT - PORT

P6 HANDOFF FROM SSRMS TO SRMS
(PDRS, P6 NOMINAL)

No Exercise
S1 RAD 1
Deploy

No Exercise
S1 RAD 3
Deploy

No Exercise
while both
arms grappled.

STS-120 FD07

REPLANNED

GMT Date 10/29 (302) | W | TDRSE | Z | ORB | MET Day 005 | STS ATI

R2 MS2 WILSON | MS3 WHEELOCK | MS4 NESPOLI | **M1** FE-2 (UP) TANI | Notes

04:00 05:00 06:00 07:00

12:00 13:00 14:00 15:00 16:00

ORB: 88, 89, 90

BIAS-XLV-ZVV

SLEEP

SLEEP

SLEEP

SLEEP (8.5)

FLIGHT SLEEP LOG (ORB OPS, SDBI)
POST-SLEEP ACTIVITY
(ORB OPS, CREW SYS)

FLIGHT SLEEP LOG (ORB OPS, SDBI)
POST-SLEEP ACTIVITY
(ORB OPS, CREW SYS)

FLIGHT SLEEP LOG (ORB OPS, SDBI)
LIQ & DRY SALIVA SAMPLE(ORB OPS,SDBI)
CDM DEACT (ORB OPS,CDM DTO)
POST-SLEEP ACTIVITY
(ORB OPS, CREW SYS)

DRY SALIVA SAMPLE(ORB OPS,SDBI)
POST-SLEEP ACTIVITY
(ORB OPS, CREW SYS)

POST SLEEP

No Exercise S1 RAD 1 Deploy

No Exercise S1 RAD 3 Deploy

PREP WORK

DAILY PLANNING CONFERENCE

EVA 5 EMU RESIZE
(EVA, OFF NOMINAL PROCS)

P6 HANDOFF FROM SSRMS TO SRMS
(PDRS, P6 NOMINAL)

STS-120 FD07

REPLANNED

GMT Date 10/29 (302) | W | TDRSE | Z | ORB | MET Day 005 | STS ATI

08:00 | 09:00 | 10:00 | 11:00

90 | 91 | 92 | 93

16:00 | 17:00 | 18:00 | 19:00 | 20:00

BIAS - XLV - ZVV

CDR MELROY

SHUTTLE CONDENSATE COLLECTION
(ORB OPS, ECLS)
Perform CHANGEOUT
Use CWC s/n 5057, Temp stow CWC s/n 5104

PRLA CLOSE
(ORB OPS, PRLA)

OFF DUTY

R1 PLT ZAMKA

P/TV SUPPORT SSRMS
Config Shuttle Cameras per
ROBO 1.412 & 1.510

OFF DUTY

MS1 PARAZYNSKI

EVA SYS: 1.605 BSA BATTERY RECHARGE
(TERM)

EVA SYS: 1.605 BSA BATTERY RECHARGE
(INIT)
Ref: BATTERY RECHARGE PLAN CC

EMU SWAP FOR EVA 3
(EVA, AIRLOCK CONFIG)
Ref: MSG 063

OFF DUTY

Notes

No Exercise while both arms grappled.

UPLINK
β21 ONLY + Boxes
C2,C3,W2,M1

UPLINK
β0 ONLY + Boxes
C2,C3,W2,M2

UPLINK
β21 ONLY + Boxes
C4,C2,C3

STS-120 FD07

REPLANNED

GMT Date 10/29 (302) | W E Z | ORB | MET Day 005 | STS ATI

R2 MS2 WILSON | MS3 WHEELOCK | MS4 NESPOLI | **M1** FE-2 (UP) TANI | Notes

08:00 09:00 10:00 11:00

90 91 92 93

16:00 17:00 18:00 19:00 20:00

BIAS -XLV -ZVV

L17 Check MCIU filter screen

EMU SWAP FOR EVA 3
(EVA, AIRLOCK CONFIG)
EMU CONTINGENCY RESIZE MATRIX
(EVA, OFF NOM PROC)
Use EV2 B/U right glove (S/N 6193)
Ref: MSG 063

CDM SETUP AND BATTERY CHANGEOUT
(ORB OPS, CDM DTO)
Attach CDM in Location 4

HAM RADIO CONTACT
Ref: MSG 064
8:23-8:33 GMT

ROBO: 1.412 UNGRAPPLE AT HANDOFF -WS4

ROBO: 1.510 MNVR TO MT TRANSLATE STOW -WS4

No Exercise while both arms grappled.

OFF DUTY

OFF DUTY

OFF DUTY

ADAPTATION

OFF DUTY

STS-120 FD07

REPLANNED

GMT Date 10/29 (302) | W | TDRSE | Z | ORB | MET Day 005 | STS ATI

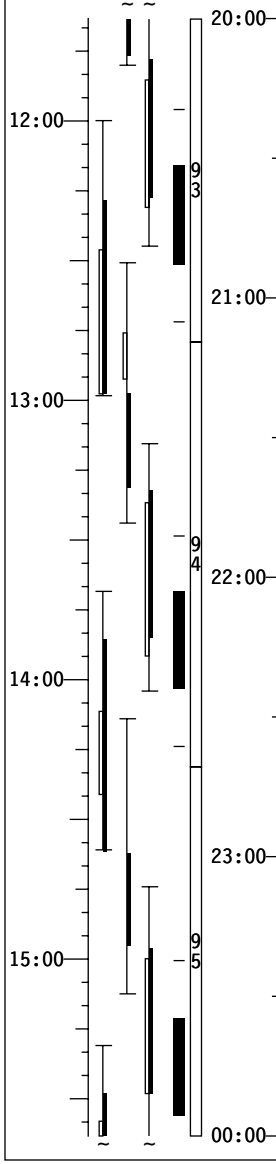

20:00
21:00
22:00
23:00
00:00

BIAS - XLV - ZVV

CDR MELROY	R1 PLT ZAMKA	MS1 PARAZYNSKI	Notes
OFF DUTY	OFF DUTY	OFF DUTY	
MEAL	MEAL	MEAL	
R13L MMU GN2 ISOL VLV A - CL (tb-CL) N2 REPRESS USING PAYLOAD N2 VLVS (ORB OPS, ECLS) Steps 1-6. MCC will TMBU SM FDA JOINT OPS: 3.103 NITROGEN TRANSFER TERM Step 1.3 not req'd	P/TV SUPPORT SSRMS Config Shuttle Cameras per ROBO 1.413 P6 HANDOFF FROM SRMS TO SSRMS (PDRS, P6 NOMINAL) After Step 3, A8L RMS SELECT - OFF SHUTTLE/ISS H2O CONTAINER FILL (ORB OPS,ECLS) Perform CWC FILL #5 Fill duration ~50 min, Ref. MSG 029	EVA SYS: 1.515 EMU METOX/LIOH/ BATTERY REPLACEMENT Install LiOH and EMU Batts Ref: CONSUMABLES TRACKING CC Ref: MSG 063 EVA SYS: 1.305 EQUIPMENT LOCK PREP Steps:1-19,24-25,29-34 Retrieve 2 DIDBs from behind A/L1DO closeout & fill for EVA3. Ref: CONSUMABLES TRACKING CC Ref: MSG 063 POST EVA 2/PRE EVA 3 TOOL CONFIG (EVA, TIMELINES) PRE EVA 3 TOOL CONFIG (EVA, TIMELINES) Ref: MSG 063	No Exercise While both arms grappled.
N2 REPRESS USING PAYLOAD N2 VLVS (ORB OPS, ECLS) Steps 7-12. MCC will TMBU SM FDA		EXERCISE	

STS-120 FD07

REPLANNED

GMT Date 10/29 (302) | W | TDRSE | Z | ORB | MET Day 005 | STS ATI

R2 MS2 WILSON | MS3 WHEELOCK | MS4 NESPOLI | **M1** FE-2 (UP) TANI | Notes

20:00 | 12:00 | 21:00 | 13:00 | 22:00 | 14:00 | 23:00 | 15:00 | 00:00

93 | 94 | 95

BIAS-XLV-ZVV

R2 MS2 WILSON	MS3 WHEELOCK	MS4 NESPOLI	M1 FE-2 (UP) TANI
OFF DUTY	OFF DUTY	OFF DUTY	OFF DUTY
		DRY SALIVA SAMPLE (ORB OPS, SDBI)	
MEAL	MEAL	MEAL	MIDDAY-MEAL
	EVA SYS: 1.515 EMU METOX/LIOH/ BATTERY REPLACEMENT Install LiOH & EMU Batts Ref: CONSUMABLES TRACKING CC Ref: MSG 063	EVA SYS: 1.510 METOX REGENERATION Perform TERMINATE	ROBO: 1.413 P6 GRAPPLE FROM SRMS-WS8
P6 HANDOFF FROM SRMS TO SSRMS (PDRS, P6 NOMINAL)	EVA SYS: 1.305 EQUIPMENT LOCK PREP Steps:1-19,24-25,29-34 Retrieve 2 DIDBs from behind A/L1DO closeout & fill for EVA3. Ref: CONSUMABLES TRACKING CC Ref: MSG 063	EVA SYS: 1.305 EQUIPMENT LOCK PREP Steps:1-19,24-25,29-34 Retrieve 2 DIDBs from behind A/L1DO closeout & fill for EVA3. Ref: CONSUMABLES TRACKING CC Ref: MSG 063	NODE 2 AVIONICS RACK OUTFITTING (ASSY OPS, ACT & C/O)
	POST EVA 2/PRE EVA 3 TOOL CONFIG (EVA, TIMELINES) PRE EVA 3 TOOL CONFIG (EVA, TIMELINES) Ref: MSG 063	POST EVA 2/PRE EVA 3 TOOL CONFIG (EVA, TIMELINES) PRE EVA 3 TOOL CONFIG (EVA, TIMELINES) Ref: MSG 063	
EXERCISE			
		DRY SALIVA SAMPLE(ORB OPS,SDBI)	

Notes: No Exercise While both arms grappled.

STS-120 FD07

REPLANNED

GMT Date 10/29 (302) | W | TDRSE | Z | ORB | MET Day 006 | STS ATI | CDR MELROY | PLT ZAMKA | MS1 PARAZYNSKI | Notes

16:00 | 17:00 | 18:00 | 19:00

95 | 96 | 97 | 98

00:00

JNT OPS: 3.110 H/O ATT CNTL CMG TO ORB
MNVR (TRK) BIAS -XLV +ZVV (ISS +XVV TEA)
TG=2 BV=5 P=160 Y=355 OM=092
A15/AUTO/VERN Init TRK [A]

SHUTTLE/ISS H2O CONTAINER FILL
(ORB OPS, ECLS)
Perform FILL TERMINATION

CWC TRANSFER
Transfer CWC(s)to ISS

EXERCISE

JOINT OPS: 3.111 H/O ATT CONT TO CMG TA
On MCC GO,DAP:FREE
IMU STAR OF OPPTY ALIGN (ORB OPS, GNC)

PRE-SLEEP ACTIVITY
(ORB OPS, CREW SYS)

01:00

EVA PROCEDURE REVIEW
Ref: EVA 3 PREBRIEF
(EVA, TIMELINES)
Ref: MSGs 063 & 068

EVA PROCEDURE REVIEW
Ref: EVA 3 PREBRIEF
(EVA, TIMELINES)
Ref: MSGs 063 & 068

EVA PROCEDURE REVIEW
Ref: EVA 3 PREBRIEF
(EVA, TIMELINES)
Ref: MSGs 063 & 068

[A] Future Load MNVR:
MNVR (TRK) BIAS -XLV +ZVV (ISS +XVV TEA completion)
TGT=2 BV 5 P=160 Y=355 OM=006
Init TRK (06/00:15:00)

BIAS -XLV +ZVV

02:00

ILLUMINATOR OPS (CUE CARD)
ILLUMINATORS ON - A,D

PRE-SLEEP ACTIVITY
(ORB OPS, CREW SYS)

PRE-SLEEP ACTIVITY
(ORB OPS, CREW SYS)

PUBLIC AFFAIRS EVENT
STS ASSETS
KU: 02:06-02:27, TDRE
Ref: MSG 067

PRE-SLEEP ACTIVITY
(ORB OPS, CREW SYS)

03:00

PRIVATE MEDICAL CONFERENCE

PLAYBACK (DIGITAL)
(PHOTO/TV, CUE CARD)
Crew Choice
KU TDRW (03:01-03:34)

PRE-SLEEP ACTIVITY
(ORB OPS, CREW SYS)

EVA SYS: 2.305 10.2 PSIA CAMPOUT
MASK PREBREATHE

REF: PRE EVA 3 TOOL CONFIG
CONSUMABLES TRACKING CC

PRE-SLEEP ACTIVITY
(ORB OPS, CREW SYS)

04:00

STS-120 FD07

REPLANNED

GMT Date 10/29 (302) | W | TDRSE | Z | ORB | MET Day 006 | STS ATI | MS2 WILSON | MS3 WHEELOCK | MS4 NESPOLI | Notes

16:00 | 17:00 | 18:00 | 19:00

95 | 96 | 97 | 98

00:00 | 01:00 | 02:00 | 03:00 | 04:00

BIAS - XLV + ZVV

MS2 WILSON

P/TV05 ISS INTERNAL OPS
(PHOTO/TV, SCENES)
Perform Setup

EVA PROCEDURE REVIEW
Ref: EVA 3 PREBRIEF
(EVA, TIMELINES)
Ref: MSGs 063 & 068

PUBLIC AFFAIRS EVENT
STS ASSETS
KU: 02:06-02:27, TDRE
Ref: MSG 067

PRE-SLEEP ACTIVITY
(ORB OPS, CREW SYS)

MS3 WHEELOCK

PRE-SLEEP ACTIVITY
(ORB OPS, CREW SYS)

EVA PROCEDURE REVIEW
Ref: EVA 3 PREBRIEF
(EVA, TIMELINES)
Ref: MSGs 063 & 068

PRE-SLEEP ACTIVITY
(ORB OPS, CREW SYS)

EVA SYS: 2.305 10.2 PSIA CAMPOUT
MASK PREBREATHE

REF: PRE EVA 3 TOOL CONFIG
CONSUMABLES TRACKING CC

MS4 NESPOLI

EXERCISE

EVA PROCEDURE REVIEW
Ref: EVA 3 PREBRIEF
(EVA, TIMELINES)
Ref: MSGs 063 & 068

PRE-SLEEP ACTIVITY
(ORB OPS, CREW SYS)

EVA SYS: 2.305 10.2 PSIA CAMPOUT
MASK PREBREATHE

REF: PRE EVA 3 TOOL CONFIG
CONSUMABLES TRACKING CC

STS-120 FD07

REPLANNED

GMT Date 10/29 (302) | W | TDRSE | Z | ORB | MET Day 006 | STS ATI | CDR MELROY | PLT ZAMKA | MS1 PARAZYNSKI | Notes

04:00 — PRE-SLEEP ACTIVITY (ORB OPS, CREW SYS) | PRE-SLEEP ACTIVITY (ORB OPS, CREW SYS) | EVA SYS: 2.305 10.2 PSIA CAMPOUT MASK PREBREATHE

REF: PRE EVA 3 TOOL CONFIG CONSUMABLES TRACKING CC

PRE-SLEEP ACTIVITY (ORB OPS, CREW SYS)

20:00 — 98

05:00

21:00 — 99

06:00

22:00

SLEEP | SLEEP | SLEEP (A/L)

07:00 — 100

23:00

08:00

BIAS -XLV +ZVV

STS-120 FD07

REPLANNED

GMT Date 10/29 (302) | W | TDRSE | Z | ORB | MET Day 006 | STS ATI | MS2 WILSON | MS3 WHEELOCK | MS4 NESPOLI | Notes

04:00 — PRE-SLEEP ACTIVITY (ORB OPS, CREW SYS)

EVA SYS: 2.305 10.2 PSIA CAMPOUT MASK PREBREATHE

REF: PRE EVA 3 TOOL CONFIG CONSUMABLES TRACKING CC

PRE-SLEEP ACTIVITY (ORB OPS, CREW SYS)

EVA SYS: 2.305 10.2 PSIA CAMPOUT MASK PREBREATHE

REF: PRE EVA 3 TOOL CONFIG CONSUMABLES TRACKING CC

PRE-SLEEP ACTIVITY (ORB OPS, CREW SYS)

DRY SALIVA SAMPLE(ORB OPS,SDBI)

20:00 — 98

05:00

21:00 — 99

06:00

22:00

07:00 — 100

23:00

08:00

BIAS -XLV +ZVV

SLEEP

SLEEP (A/L)

SLEEP

Good Morning Discovery!!!

Yesterday was yet another awesome space day for all of you! It is hard to believe that the big issue we are dealing with is what new superlative to use each day to describe the performance of both the crew and vehicle!

Zambo, notice that we actually blocked off some time in the timeline for you to send down your “cool stuff” to us! Your efforts have been really appreciated!

Have a great partial day off today and be sure and catch your breath so you will be ready for the remaining jam packed timeline!

Don’t forget to take some time today to gaze out the windows!!!

YOUR CURRENT ORBIT IS: 188 X 180 NM

NOTAMS:

EDW – RWY 15/33 ELS ONLY. RWY 18L – CLOSED.
NOR – GREEN.
WAL – RWY 04/22 CLOSED.
NTU – RWY 23l CLOSED 1100-2100Z.
NKT – FIRST 1000’ OF RWY 23L CLOSED.
YHZ – RWY 05/23 CLOSED 29 OCT 1100 – 1900Z.
FFA - ASCENT ONLY.
ZZA – RWY 30L CLOSED 30 OCT 0600 – 1800Z.
FIRST 600M OF RWY 30L NOT AVAILABLE. 10,200’ REMAINING.
WAK - UNUSABLE
AMB - UNUSABLE
JDG – DIEGO GARCIA: CLOSED 1800-0100Z.
IKF – NO AGREEMENT FOR USE
AWG – NO AGREEMENT FOR USE.
BEN – POLITICALLY NOT RECOMMENDED/NOT SUPPORTED.

NEXT 2 PLS OPPORTUNITIES:

EDW22 ORB 95 – 5/23:33 (SCT150 BKN200 VRB05 – **CHC VIRGA WI 30 NM**)
EDW22 ORB 110 – 6/22:20 (FEW040 FEW250 240/08P12)

OMS TANK FAIL CAPABILITY:

L OMS FAIL: NO R OMS FAIL: NO

LEAKING OMS PRPLT BURN:

L OMS LEAK: ALWAYS BURN RETROGRADE
R OMS LEAK: ALWAYS BURN RETROGRADE

OMS QUANTITIES(%)

L OMS OX = 33.5 R OMS OX = 33.5
FU = 33.1 FU = 33.4

SUBTRACT I'CNCT COUNTER FOR CURRENT OMS QUANTITIES

DELTA V AVAILABLE:

OMS	337 FPS
ARCS (TOTAL ABOVE QTY1)	44 FPS
TOTAL IN THE AFT	381 FPS
ARCS (TOTAL ABOVE QTY2)	78 FPS
FRCS (ABOVE QTY 1)	23 FPS
AFT QTY 1	79 %
AFT QTY 2	41 %

THERE ARE NO FAILURE/IMPACT/WORK AROUNDS FOR TODAY.

The MMT met today to review mission progress, orbiter systems status, and TPS inspection results. The OMS blanket pull was fully analyzed last night and, as expected, was cleared for entry. As a result, all of the orbiter TPS has been fully inspected, analyzed, and cleared for entry. Discovery's systems continue to perform in an outstanding manner.

EVA 2 had just completed as the MMT was beginning and results from EVA 2 were briefly reviewed. The MMT was very pleased with the success of EVA 2 as well as the overall progress of the mission. The results from the SARJ inspection are being evaluated and discussions have been initiated to determine what, if anything, could be done during the docked timeframe to further assist the ISS team.

High Beta Thermal Impacts - The vehicle thermal profile continues to track the preflight predicted profile and based on this the FD 7 and FD 9 maneuvers to the +XVV attitudes will stay in the timeline.

The PDRS shoulder joint that was getting warm while in the pre-cradle position responded nicely to the Node 2 viewing attitude. Powering the Arm off in the pre-cradle position has also kept the shoulder temps within limits.

SRB, ET, and SSME Final MMT Reports - A final report was presented to the MMT for SRB, ET and SSME. All elements report very nominal performance. The SSMEs and SRBs all performed well and had no in flight anomalies. The ET systems performed well and details were provided for the foam loss events noted in ascent imagery.

16-0096 (MSG 63) – FD7 EVA DELTAS
Page 1 of 4

Yesterday was another exciting, busy EVA day! Everyone did a superb job dealing with all of the last minute changes and real-time workarounds - but the fun hasn't ended yet!

Big picture for EVA 3: On the way back from deploying the P6 radiator, Scott will be stopping by the port SARJ, removing Cover 12, and performing an inspection, picture snapping (with flash!) and sample-taking similar to EVA 2. This will give us a baseline to use for comparison in the stbd SARJ troubleshooting activities. To allow for enough time out at the SARJ, the P1 SFU and P1 NTA break torque tasks will both be on call.

<u>On Orbit Installable Handrail Troubleshooting Procedure</u>
To attempt to resolve the issue regarding the unreleased bolt on OIH 0371, the following procedure should be performed IVA during EVA Tool Config.

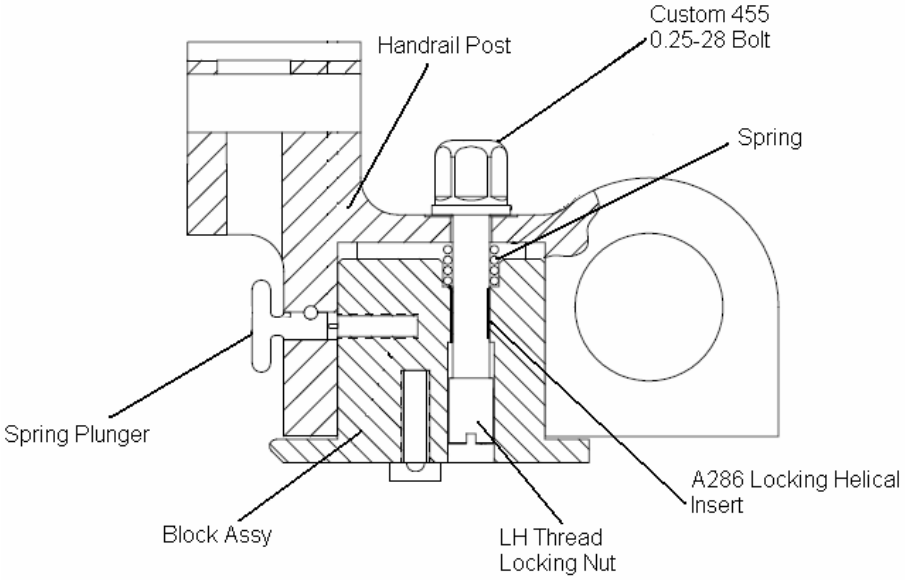

1. Verify smooth operation of the soft dock mechanism and inspect for FOD
2. Engage the soft dock mechanism in the soft dock position
3. Verify a gap exists between the bolt head and the handrail post
4. If no FOD or damage visible, drive OIH bolt:
    5. PGT, 7/16 in ext: B7, CW1; 1 turn; report peak torque
    6. If bolt drives:
        7. PGT, 7/16 in ext: A1, CCW1; 1 turn to HS
    8. If bolt does not drive in step 5, OIH considered failed
9. Report results to MCC-H; if MCC reports handrail is GO for EVA, stow in Staging Bag

EVA, <u>TIMELINES</u>, FS 7-92, POST EVA 2/PRE EVA 3 TOOL CONFIG

For the OIH Carrier Bags, please reinstall the inserts and lids in each of the bags (reminder that 1 stays on ISS, and 1 comes home on STS). We

will send you another reminder at the end of the mission before coming home.

Please stow the Velcro/Tape Caddy back in crewlock bag #2

Please leave the new RPCM stowed in Small ORU bag; however you need to remove the RETs for the EVA 3 tool config. The sm ORU bag can be temp stowed outside the Airlock.

EVA, TIMELINES, FS 7-104, PRE EVA 3 TOOL CONFIG

PGTs: you are free to remove the Kapton tape from all 3 of the PGTs if you think it will help with visibility

Camera plan – please remove the camera from crewlock bag #3 (with the PAD), install the flash, and secure to crewlock bag #2 with another adjustable tether to be used for temp stow. Leave the other camera (without flash) in the Med ORU bag.

Verify the Velcro/Tape caddy is in crewlock bag #2

The spare torque wrench listed in the Staging Bag addition can be found in the IV bag

The caddies re-configured for yesterday's EVA need to be set back to their original config, and the zip-tie tether points on the loop pin puller need to be replaced since they went EVA. The steps are as follows:

1. Retrieve GP caddy containing taped needle-nose pliers and loop pin puller from small ORU bag
2. Retrieve temp-stowed GP caddy containing taped compound cutters
3. Transfer taped needle-nose pliers to GP caddy containing taped compound cutters
4. Stow GP caddy containing taped needle-nose pliers and taped compound cutters in C/L Bag #1 (Solar Array Tools)
5. Retrieve temp-stowed vice grips and stow in GP caddy containing loop pin puller
6. Replace zip-tie tether point (two zip ties) per the following (Note: Zip ties are only certified for single EVA use):
    7. Remove loop pin puller from GP caddy
    8. Remove both old zip-tie tether points
    9. Retrieve two (2) zip ties (p/n SDD13101649) from A/L1D2 - Behind Closeout
    10. Install both zip ties onto the loop pin puller. Construct zip-tie tether points to resemble recently-removed tether points
    11. Restow loop pin puller in GP caddy
12. Stow GP caddy containing vice grips and loop pin puller in C/L Bag #4 (MMOD Shield)

EVA, TIMELINES, FS 7-107, EVA 3 A/L EGRESS AND SETUP

EV1, insert Step 15a. When at P1/P3 interface, temp stow EVA camera/flash at SARJ

EVA, TIMELINES, FS 7-110, ATTACH P6 TO P5
EV2 Step 2, expect only about 3 turns on the P6 ground strap during install on P5 (rather than the published 6)

EVA, TIMELINES, FS 7-122, OUTBOARD RADIATOR CINCH RELEASE
EV1, Insert Step 12a. Temp stow crewlock bag on CETA 2
Insert Step 12b. Retrieve Velcro/Tape caddy from crewlock bag; stow on MWS
Insert Step 12c. Translate to port SARJ
Delete Step 13.

EVA, TIMELINES, FS 7-124, P1 SFU CONFIG FOR CINCH FIRING
Add "ON CALL" to the top of this procedure
Insert MSG 068 (16-0103) pages FS 124a – 124b

EVA, TIMELINES, FS 7-125, P1 SFU CONFIG FOR CINCH FIRING
EV1, if an O2 recharge should be required:
Insert step 9a. Connect SCU to DCM
Insert step 9b. When O2 P greater than 800
Insert step 9c. Disconnect SCU, stow SCU in pouch
Insert step 9d. Egress Airlock, close Thermal Cover

EVA, TIMELINES, FS 7-128, MBSU TRANSFER
EV2, if an O2 recharge should be required:
Insert step 2a. Connect SCU to DCM
Insert step 2b. When O2 P greater than 800
Insert step 2c. Disconnect SCU, stow SCU in pouch
Insert step 2d. Egress Airlock, close Thermal Cover

Post EVA 2 Glove Inspection
The EMU Gloves photos you sent down were reviewed by the glove team and they cleared both pairs of gloves for future EVA use.

EV2 Glove Replacement
As we let you know yesterday, we would like you to use the backup right glove (s/n 6193) for EVA 3. For the left glove, you have the option to use the prime or backup left glove, just let us know which one you choose. More time has been added to EMU SWAP to change out your gloves. For the glove swap, note that you will adjust the arm cams to the Long/Long for each backup glove used. Reference the EMU Contingency Resize Matrix (FS 12-27) as required.

Update to DIDB Plan
During Equipment Lock Prep (FD7) for EVA 3/FD8, retrieve 2 DIDBs from the behind A/L1D0 closeout. These DIDB's should be filled and used for EVA 3. With the GIRA installed, the water used to fill the DIDBs will be non-iodinated and therefore be constrained to the 24hr time limit.

EMU LiOH / EMU Battery Replacement
Per message 058 uplinked yesterday, MS1 and MS3 have a delta when they perform the LiOH/Battery Install today. They can retrieve LiOH s/n 2018 from the MO-2 Bag located at A/L1O1 and swap it with s/n 2023. LiOH s/n 2023 will remain on station.

EV3 Crew Identifier Stripe
Just as a friendly reminder, please make sure that the EV3 crew identifier stripe was removed from the SCU Pouch and re-installed on the EMU.

Updated EMU Prebreathe Procedure
Verify msg. 16-0049 (MSG-025), updated 1.225 EMU Prebreathe, has been incorporated into all copies of the ISS EVA Systems Checklist.

EMU Hot Mic During EVA Prep/Post
To eliminate background noise during pre-EVA suit ops, make the following changes in EVA PREP and EMU PURGE:

1. US_SODF; EVA - Extra Vehicular Activities: EVA Systems: 2.3 Overnight Campout; 2.320 10.2 PSIA Campout EVA Prep; Omit steps 70 – 72.

2. US_SODF; EVA - Extra Vehicular Activities: EVA Systems: 1.2 EVA Prep/Post; 1.220 EMU Purge; Omit steps 18 and 20.