National Aeronautics and Space Administration

STS-120

DISCOVERY'S CREW

HARMONY INSTALLATION

P6 ARRAY AND RADIATOR DEPLOYMENT

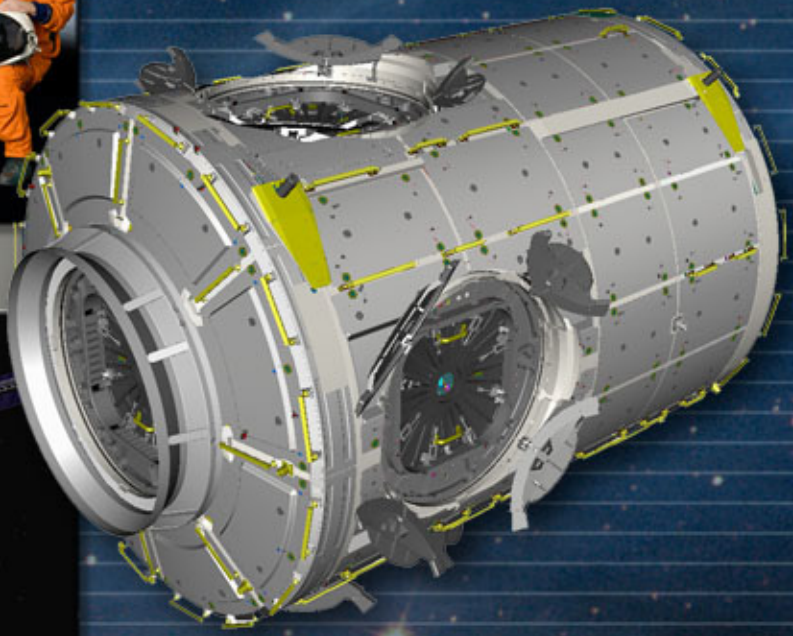

Harmony: A Global Gateway

Providing a Connection to Research for the World

www.nasa.gov

United Space Alliance

CONTENTS

Section Page

STS-120 MISSION OVERVIEW 1

TIMELINE OVERVIEW 7

MISSION PROFILE 11

MISSION PRIORITIES 13

MISSION PERSONNEL 15

STS-120 DISCOVERY CREW 17

PAYLOAD OVERVIEW 27
- HARMONY (NODE 2) 27

STATION RELOCATION ACTIVITIES 33
- PORT 6 SOLAR ARRAYS RELOCATION 33
- PRESSURIZED MATING ADAPTER-2 (PMA-2) RELOCATION 42

RENDEZVOUS AND DOCKING 47
- UNDOCKING, SEPARATION AND DEPARTURE 49

SPACEWALKS 51

EXPERIMENTS 57
- DETAILED TEST OBJECTIVES 57
- SHORT-DURATION RESEARCH TO BE COMPLETED DURING STS-120 59
- EUROPEAN EXPERIMENT PROGRAM 62

EXTERNAL TANK ET-120 (ET-120) 67

SHUTTLE REFERENCE DATA 71

LAUNCH AND LANDING 85
- LAUNCH 85
- ABORT-TO-ORBIT (ATO) 85
- TRANSATLANTIC ABORT LANDING (TAL) 85

Section Page

RETURN-TO-LAUNCH-SITE (RTLS) 85
ABORT ONCE AROUND (AOA) 85
LANDING 85

ACRONYMS AND ABBREVIATIONS 87

MEDIA ASSISTANCE 103

PUBLIC AFFAIRS CONTACTS 105

STS-120 MISSION OVERVIEW: HARMONY: A GLOBAL GATEWAY PROVIDING A CONNECTION TO RESEARCH FOR THE WORLD

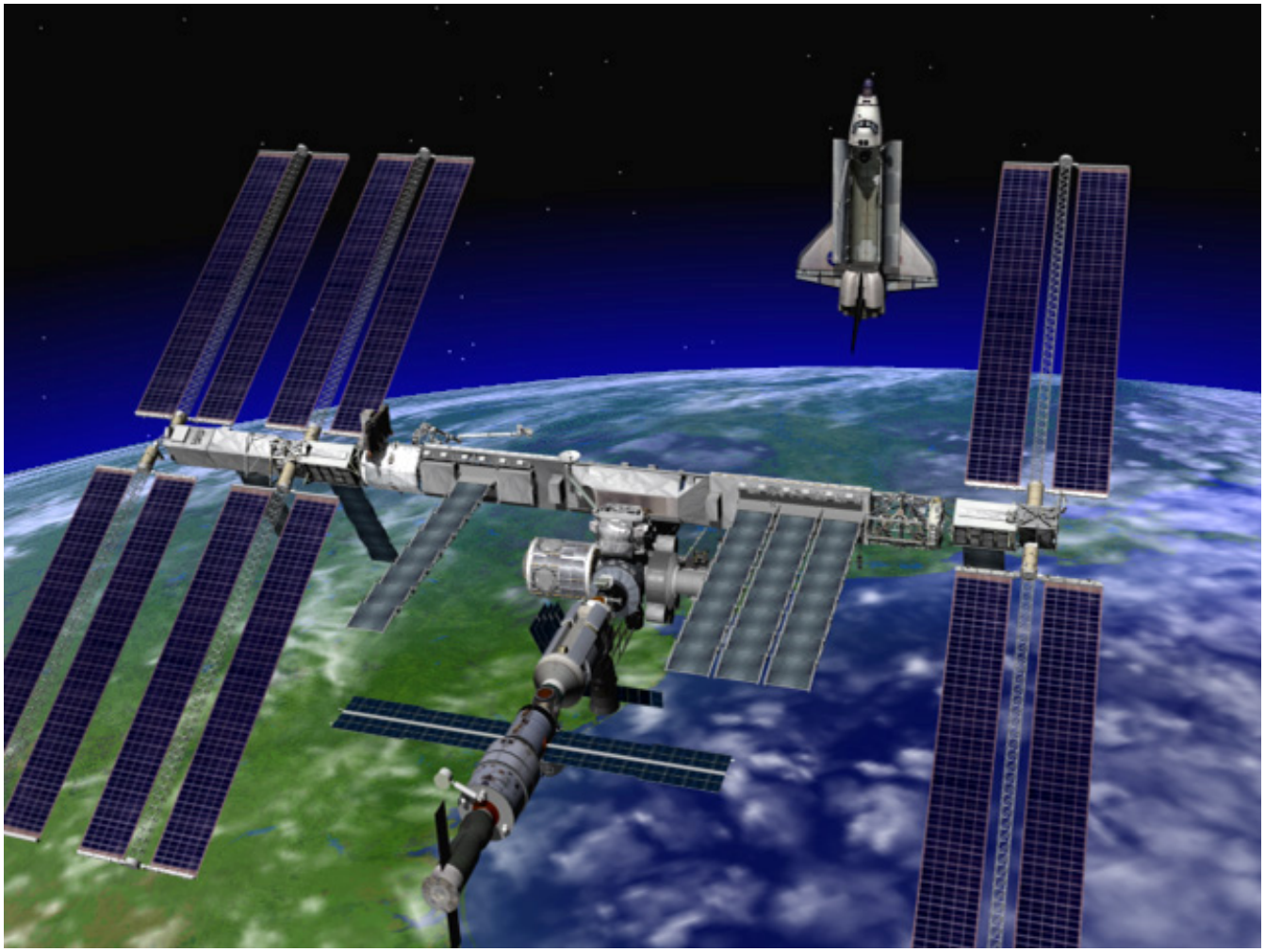

This graphic depicts the International Space Station as it will appear after Discovery undocks, following relocation of the Port 6 truss and delivery of the Harmony module.

Expansion of the International Space Station will make great strides during STS-120, also known as Assembly Flight 10A. The Node 2 connecting module, Harmony, will travel to the station inside space shuttle Discovery's payload bay for installation on the station. This addition sets the stage for the arrival of new research laboratories from the European Space Agency and the Japan Aerospace Exploration Agency in upcoming shuttle missions.

As part of assembling the giant laboratory, STS-120 astronauts will relocate the Port 6 (P6) truss element and solar arrays to a permanent position. The element is presently on orbit and attached to the truss segment Zenith 1 (Z1). P6 will be removed from its current location, reattached to the Port 5 (P5) truss and then the solar arrays will be redeployed and activated to gather sunlight for power generation.

Discovery's seven astronauts include Commander Pam Melroy, Pilot George Zamka, mission specialists Scott Parazynski, Stephanie Wilson, Doug Wheelock, and Paolo Nespoli, representing the European Space Agency (ESA).

Expedition 16 Flight Engineer Daniel Tani will serve as a mission specialist aboard Discovery before rotating positions with station resident NASA astronaut Clayton Anderson after docking. Anderson arrived at the station aboard the space shuttle Atlantis during STS-117 in June.

Tani will join Expedition 16 Commander Peggy Whitson and Flight Engineer Yuri Malenchenko, who arrived at the station aboard a Russian Soyuz spacecraft Oct. 12.

Following the successful simulated launch countdown and emergency egress practice, the STS-120 crew gathers for the traditional photo near the top of the launch pad fixed service structure. From left are Mission Specialists Scott Parazynski and Stephanie Wilson, Pilot George Zamka, Commander Pam Melroy, and Mission Specialists Daniel Tani, Doug Wheelock and Paolo Nespoli, who represents the European Space Agency. The countdown was the culmination of the prelaunch terminal countdown demonstration test, or TCDT.

The space shuttle is poised for launch from pad 39A at Kennedy Space Center, backdropped by the Vehicle Assembly Building.

The space shuttle mission begins with the targeted liftoff of Discovery from NASA's Kennedy Space Center at 11:38 a.m. EDT on Oct. 23. The next day includes the close inspection of Discovery's heat shield using the shuttle's robotic arm and Orbiter Boom Sensor System to check for any ascent-imposed damage to the orbiter.

Discovery arrives at the International Space Station on the third day of the mission. Melroy will perform the rendezvous pitch maneuver with Discovery about 600 feet below the station. This activity allows Anderson and Malenchenko to take detailed photographs of the underside of Discovery's heat shield as it approaches the station. The images will be added to the ascent imagery and flight day 2 data being analyzed by engineers on the ground to verify the heat shield's condition following liftoff.

Melroy then will move Discovery in for docking to the pressurized mating adapter at the end of the station's Destiny laboratory.

After hatches are opened, Tani and Anderson's specialized seat liners will be exchanged inside the emergency-return Soyuz spacecraft; signifying the crew members' rotation between the space station and shuttle.

Parazynski and Wheelock will enter the station's Quest airlock for the overnight campout procedure to prepare for the first spacewalk on the next day. This procedure will be followed before each spacewalk.

Flight day 4 features the first of five spacewalks during STS-120. Parazynski and Wheelock will prepare Harmony for its removal from Discovery's payload bay, retrieve an S-band antenna for return to Earth and disconnect umbilicals between the P6 and Z1 truss elements.

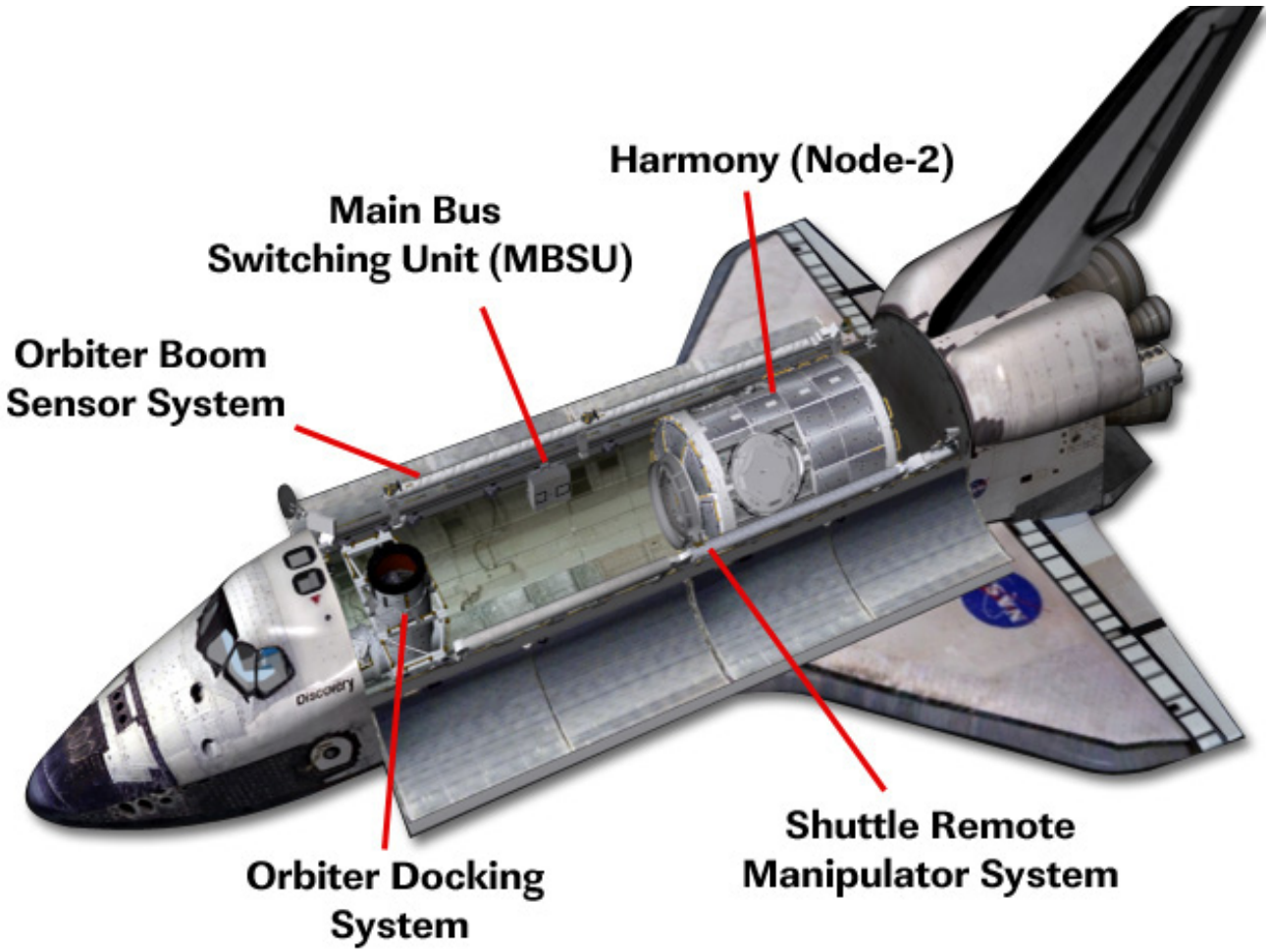

The graphic above shows the configuration of Discovery's payload bay for the STS-120 mission.

During the spacewalk Wilson, Tani and Anderson will operate the station's robotic arm for the antenna retrieval, to unberth Harmony from Discovery's cargo bay and install it on the port side of Node 1, known as Unity. Harmony will be secured in place on Unity through internal connections. Anderson and Zamka will close out the day with leak checks of the interface between Unity and Harmony.

Flight day 5 features the first ingress of Harmony in space. The hatches between Unity and Harmony will be opened by Nespoli and Whitson. Outfitting of the station's newest pressurized module will continue throughout the mission. Time also is allotted this day for a focused inspection of Discovery's heat shield, if required.

The mission's second spacewalk occurs on flight day 6. Parazynski and Tani will assist with detaching the P6 truss from its current location, complete external outfitting of Harmony and replace a remote power controller, or circuit breaker. Wilson, Wheelock and Anderson will operate the station's robotic arm for the P6 removal and to place it in an overnight parked position.

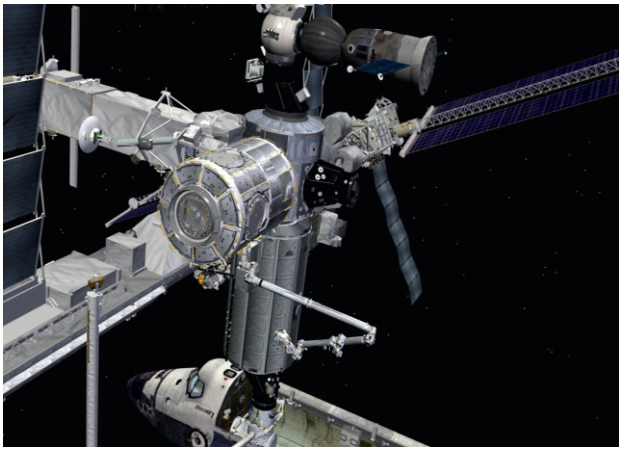

The station's robotic arm places the Harmony module onto the port side of the Unity module.

The next day, Wheelock, Wilson and Anderson will handoff the P6 element to the shuttle robotic arm, operated by Zamka and Melroy. The station robotic arm will then be moved down the station's truss atop the mobile transporter to a closer position for the P6 installation on the outboard, port side of the truss. The P6 will then be handed back to the station robotic arm for installation during the next day's spacewalk. Flight day 7 also includes off duty time for the crew members in the morning.

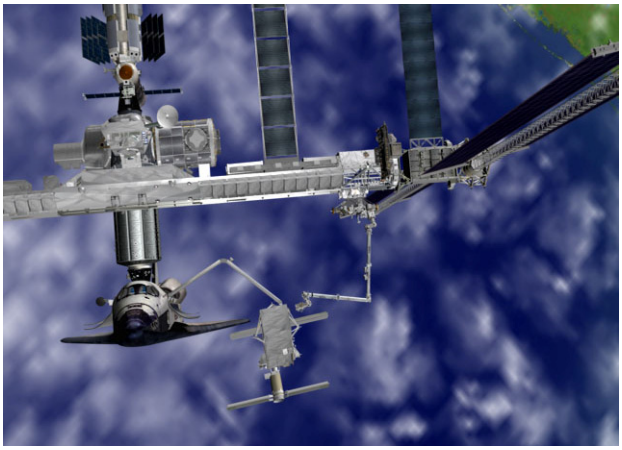

The P6 truss is handed between the station's robotic arm and the shuttle's robotic arm during its installation.

The next day, Wheelock, Wilson and Anderson will hand off the P6 element to the shuttle robotic arm, operated by Zamka and Melroy. The station robotic arm will then be moved down the station's truss atop the mobile transporter to a closer position for the P6 installation on the outboard, port side of the truss. The P6 will then be handed back to the station robotic arm for installation during the next day's spacewalk. Flight day 7 also includes off duty time for the crew members in the morning.

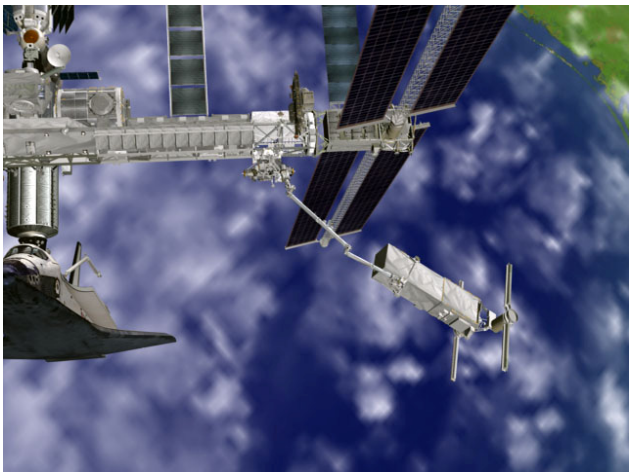

The station's robotic arm moves the P6 upwards to its new location at the outboard, port side of the truss.

On flight day 8, Tani and Wilson will use the station's robotic arm to move P6 to a pre-install position. During the mission's third spacewalk, Parazynski and Wheelock will assist with attaching P6 to the P5 short spacer truss. The spacewalkers also will transfer the spare main bus switching unit hardware from Discovery to the space station.

The P6 solar array wings will be redeployed following the spacewalk. The ground control team will begin the deployment to one of 31 mast bays. Melroy, Zamka and Whitson will continue the full deployment of the arrays.

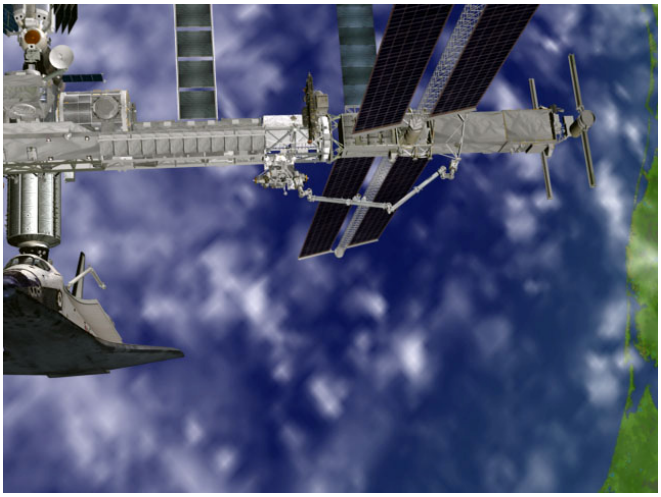

P6 is guided to its new location by the station robotic arm.

Flight day 9 includes transferring equipment between the shuttle and space station, as well as preparations for the next spacewalk.

The fourth spacewalk will be conducted on flight day 10 by Parazynski and Wheelock. They will perform Detailed Test Objective 848, a demonstration of space shuttle thermal protection system repair techniques. The primary purpose of the test is to evaluate STA-54 material and a tile repair ablator dispenser for potential use in a microgravity and vacuum environment.

Flight day 11 includes the fifth and final spacewalk of the joint mission. The spacewalk will be conducted by station residents, Whitson and Malenchenko, to complete several external station configuration tasks.

The crew will complete final transfer work, enjoy off duty time and then close the hatches between Discovery and the space station the evening of flight day 12.

Discovery will undock early on flight day 13 and complete a fly around of the newly remodeled space station. The crew also will conduct a detailed inspection of Discovery's heat shield for any indications of micrometeoroid debris impacts.

Flight day 14 includes standard preparations of Discovery for entry and landing on the following day, flight day 15.

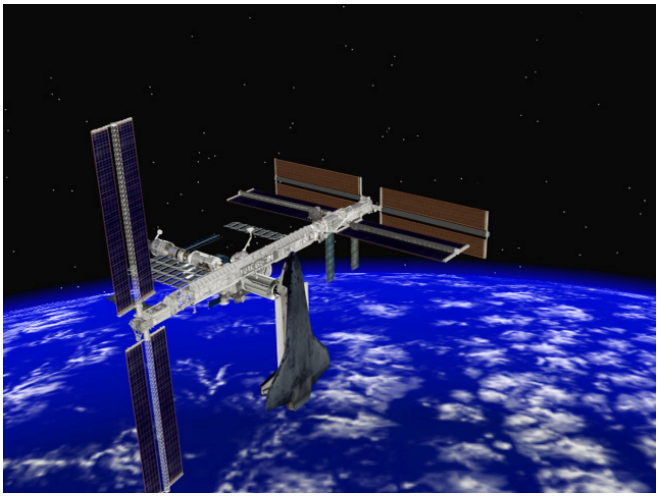

The P6 solar arrays are shown deployed against the blackness of space on the end of the port truss.

TIMELINE OVERVIEW

FLIGHT DAY 1

- Launch
- Payload Bay Door Opening
- Ku-Band Antenna Deployment
- Shuttle Robotic Arm Activation and Checkout
- Umbilical Well and Handheld External Tank Video and Stills Downlink

FLIGHT DAY 2

- Discovery Thermal Protection System Survey with Orbiter Boom Sensor System (OBSS)
- Extravehicular Mobility Unit Checkout
- Centerline Camera Installation
- Orbiter Docking System Ring Extension
- Orbital Maneuvering System Pod Survey
- Rendezvous Tools Checkout

FLIGHT DAY 3

- Rendezvous with the International Space Station
- Rendezvous Pitch Maneuver Photography by the Expedition 16 Crew
- Docking to the Station's Pressurized Mating Adapter-2
- Hatch Opening and Welcoming
- Soyuz Seat Liner Swap and Expedition Crew Exchange by Anderson and Tani
- Station-to-Shuttle Power Transfer System (SSPTS) Activation
- OBSS Unberth by Canadarm2
- Extravehicular Activity (EVA) 1 Procedure Review
- EVA 1 Campout by Parazynski and Wheelock

FLIGHT DAY 4

- EVA-1 by Parazynski and Wheelock (Node 2 Unberth Preparations, S-Band Antenna Retrieval, P6/Z1 Umbilical Disconnection)
- Harmony (Node 2) Unberth and Installation on Port Side of Unity (Node 1)
- Harmony/Unity Vestibule Leak Checks

FLIGHT DAY 5

- Discovery Thermal Protection System Focused Inspection with OBSS (if required)
- Harmony Node 2 Vestibule Outfitting and Ingress
- OBSS Handoff to Shuttle Robotic Arm and Berthing
- EVA-2 Procedure Review
- EVA-2 Campout by Parazynski and Tani

FLIGHT DAY 6

- EVA-2 by Parazynski and Tani (P6 Detachment from Z1 Truss, Harmony (Node 2) Outfitting, Remote Power Controller Unit Replacement, Harmony Node 2 Power and Data Grapple Fixture Installation)
- P6 Truss Grapple by Canadarm2 and Demate from Z1 Truss
- Harmony (Node 2) Outfitting

FLIGHT DAY 7

- P6 Truss Handoff from Canadarm2 to Shuttle Robotic Arm
- Mobile Transporter Move to Far Port Side of Truss
- Crew Off Duty Periods
- P6 Truss Handoff from Shuttle Robotic Arm to Canadarm2
- Harmony Node 2 Avionics Rack Outfitting
- EVA Procedure Review
- EVA-3 Campout by Parazynski and Wheelock

FLIGHT DAY 8

- EVA-3 by Parazynski and Wheelock (P6/P5 Installation, Main Bus Switching Unit Transfer)
- P6 Truss Installation to P5 Truss
- P6 4B and 2B Solar Array Redeployment

FLIGHT DAY 9

- Shuttle and Station Transfers
- Joint Crew News Conference
- EVA Procedure Review
- EVA-4 Campout by Parazynski and Wheelock

FLIGHT DAY 10

- Shuttle and Station Transfers
- EVA-4 by Parazynski and Wheelock (Tile Repair Detailed Test Objective Demonstration)
- EVA Procedure Review
- EVA-5 Campout by Whitson and Malenchenko

FLIGHT DAY 11

- Shuttle and Station Transfers
- EVA-5 by Whitson and Malenchenko (SSPTS Cable Stow, Destiny Lab/Pressurized Mating Adapter-2 Stow, Removal of Harmony Active Common Berthing Mechanism Cover, Reconfigure S0 Truss/Unity Node 1 and Zarya Module/Pressurized Mating Adapter-1 Power and Jumper Cables)

FLIGHT DAY 12

- Crew Off Duty Periods
- Farewells and Hatch Closing

FLIGHT DAY 13

- Undocking from ISS Pressurized Mating Adapter-2 and Flyaround
- Final Separation from the International Space Station
- OBSS Unberth and Late Inspection of Discovery's Thermal Protection System
- OBSS Final Berthing

FLIGHT DAY 14

- Cabin Stow
- Flight Control System Checkout
- Reaction Control System Hot-Fire Test
- Crew Deorbit Briefing
- Launch and Entry Suit Checkout
- Recumbent Seat Set Up for Anderson
- Ku-Band Antenna Stow

FLIGHT DAY 15

- Deorbit Preparations
- Payload Bay Door Closing
- Deorbit Burn
- Kennedy Space Center Landing

This page intentionally left blank.

MISSION PROFILE

CREW

Commander:	Pam Melroy
Pilot:	George Zamka
Mission Specialist 1:	Scott Parazynski
Mission Specialist 2:	Stephanie Wilson
Mission Specialist 3:	Doug Wheelock
Mission Specialist 4:	Paulo Nespoli
Mission Specialist 5:	Daniel Tani (up)
Mission Specialist 5:	Clayton Anderson (down)

LAUNCH

Orbiter:	Discovery (OV-103)
Launch Site:	Kennedy Space Center Launch Pad 39A
Launch Date:	No earlier than Oct. 23, 2007
Launch Time:	11:38 a.m. EDT (Preferred In-Plane launch time for 10/23)
Launch Window:	5 Minutes
Altitude:	122 Nautical Miles (140 Miles) Orbital Insertion; 185 NM (213 Miles) Rendezvous
Inclination:	51.6 Degrees
Duration:	13 Days, 18 Hours, 09 Minutes

VEHICLE DATA

Shuttle Liftoff Weight:	4,524,141 pounds
Orbiter/Payload Liftoff Weight:	286,211 pounds
Orbiter/Payload Landing Weight:	201,895 pounds
Software Version:	OI-32

Space Shuttle Main Engines:

SSME 1:	2050
SSME 2:	2048
SSME 3:	2058
External Tank:	ET-120
SRB Set:	BI-131
RSRM Set:	98

SHUTTLE ABORTS

Abort Landing Sites

RTLS:	Kennedy Space Center Shuttle Landing Facility
TAL:	Primary – Zaragoza, Spain Alternates – Moron, Spain and Istres, France
AOA:	Primary – Kennedy Space Center Shuttle Landing Facility; Alternate – White Sands Space Harbor

Landing

Landing Date:	No earlier than Nov. 6, 2007
Landing Time:	4:47 a.m. EST
Primary landing Site:	Kennedy Space Center Shuttle Landing Facility

PAYLOADS

Integrated Truss Segment (ITS) – Starboard 5 (S5)

This page intentionally left blank.

MISSION PRIORITIES

1. Node 2 Installation
2. Crew Rotation
3. P6 Relocation from Z1 to P5
4. P6 Activation
   (a) Deploy P6 forward radiator
   (b) Deploy P6 Solar Arrays (2B and 4B)
5. Deploy S1 radiator outer panels
6. Orbital Replacement Unit Installation/Return
   (a) Node 2 Power and Data Grapple Fixture Install, S-band Antenna Support Assembly (SASA)/Baseband Signal Processor (BSP) Return, Main Bus Switching Unit Install, Remote Power Controller Module R&R
7. Cargo Transfer from/to middeck
8. Preparations for PMA 2 Relocation and Node 2 Fluid Umbilical Tray Relocation and Avionics Connections
9. Internal Thermal Control System Remediation
10. Oxygen/Nitrogen Transfer
11. Node 2 Ingress and Outfitting
12. Detailed Test Objectives: Tile Repair Ablator Dispenser; Station Wireless Instrumentation System; Carbon Dioxide monitoring; Multi-Protocol Converter for live HDTV downlink

This page intentionally left blank.

MISSION PERSONNEL

KEY CONSOLE POSITIONS FOR STS-120

	Flt. Director	CAPCOM	PAO
Ascent	Norm Knight	Terry Virts Lee Archambault (Weather)	Kylie Clem
Orbit 1 (Lead)	Rick LaBrode	Chris Ferguson	Kylie Clem (Lead)
Orbit 2	Mike Moses	Tony Antonelli	Nicole Lemasters
Planning	Mike Sarafin	Shannon Lucid	Pat Ryan
Entry	Bryan Lunney	Terry Virts Lee Archambault (Weather)	Kylie Clem
Shuttle Team 4	Paul Dye	N/A	N/A
ISS Orbit 1	Dana Weigel	Hal Getzelman	N/A
ISS Orbit 2 (Lead)	Derek Hassmann	Kevin Ford	N/A
ISS Orbit 3	Heather Rarick	Zack Jones	N/A
Station Team 4	Ginger Kerrick	N/A	N/A

JSC PAO Representative at KSC for Launch – John Ira Petty
KSC Launch Commentator – Mike Curie (Fueling)
KSC Launch Director – Mike Leinbach
NASA Launch Test Director – Steve Payne

This page intentionally left blank.

STS-120 DISCOVERY CREW

The STS-120 patch reflects the role of the mission in the future of the space program. The shuttle payload bay carries the Harmony module, the doorway to the future international laboratory elements on the International Space Station.

On the left the star represents the space station; the red colored points represent the current location of the P6 solar arrays, furled and awaiting relocation when the crew arrives. During the mission, the crew will move P6 to its final home at the end of the port truss. The gold points represent the P6 solar arrays in their new location, unfurled and producing power for science and life support.

On the right, the moon and Mars can be seen representing the future of NASA. The constellation Orion rises in the background, symbolizing NASA's new crew exploration vehicle. Through all, the shuttle rises up and away, leading the way to the future.

Discovery's seven astronauts take a break from training to pose for the STS-120 crew portrait. Pictured from the left are mission specialists Scott Parazynski, Doug Wheelock, Stephanie Wilson, Pilot George Zamka, Commander Pam Melroy, Expedition 16 Flight Engineer Daniel Tani and Paolo Nespoli, a mission specialist from Italy representing the European Space Agency (ESA). The crew members are attired in training versions of their shuttle launch and entry suits.

Short biographical sketches of the crew follow with detailed background available at:

http://www.jsc.nasa.gov/Bios/

STS-120 CREW BIOGRAPHIES

Pam Melroy

A retired Air Force colonel, Pam Melroy will lead the crew of STS-120 on the 23rd shuttle mission to the International Space Station. Melroy served as the pilot of STS-92 in 2000 and STS-112 in 2002. Making her third spaceflight, she has logged more than 562 hours in space. She has overall responsibility for the execution of the mission, orbiter systems operations and flight operations, including landing. In addition, Melroy will fly the shuttle in a rendezvous pitch maneuver while Discovery is 600 feet below the station to enable the station crew to photograph the shuttle's heat shield. She will then dock Discovery to the station.

George Zamka

Marine Col. George Zamka has more than 4,000 flight hours in more than 30 different aircraft. He will make his first journey into space as the pilot of space shuttle Discovery for the STS-120 mission. Selected by NASA in 1998, Zamka has served in various technical and leadership roles in the astronaut office. He has been the lead for the shuttle training and procedures division and the supervisor for the astronaut candidate class of 2004. He will be responsible for orbiter systems operations and will help Melroy in the rendezvous and docking with the station. Zamka will undock Discovery from the station at the end of the joint mission. He will also be operating the shuttle robotic arm for various activities, including the handoff of the P6 truss.

Scott Parazynski

A medical doctor, mountaineer and former U.S Luge Team athlete, veteran astronaut Scott Parazynski will be making his fifth spaceflight on STS-120 as mission specialist 1. He has logged more than 1,019 hours in space, including 20 hours of spacewalking time. Following the Columbia tragedy, Parazynski was the astronaut lead for the space shuttle Thermal Protection System inspection and repair techniques development. He will serve as the lead spacewalker and will conduct four of the five spacewalks during the mission. The spacewalks are focused on installation of Node 2, robotically relocating the P6 truss element and evaluating material and a dispenser for potential space shuttle tile repair. Parazynski also will be operating the shuttle robotic arm during heat shield inspections.

Stephanie Wilson

Astronaut Stephanie Wilson will be making her second spaceflight for STS-120 as mission specialist 2. Selected as an astronaut in 1996, she logged more than 306 hours in space during the STS-121 mission in 2006. Wilson will be on the flight deck during launch and landing, serving as the flight engineer to assist Melroy and Zamka. She will be heavily involved in operating both the shuttle and station robotic arms for the shuttle thermal protection system inspections, spacewalk activities, Node 2 installation and the P6 truss element and solar array relocation.

Doug Wheelock

Army Col. Doug Wheelock will be making his first flight into space aboard Discovery as mission specialist 3. He has a bachelor's degree in applied science and engineering from the U.S. Military Academy and a master's degree in aerospace engineering from Georgia Tech. Wheelock has logged more than 2,500 flight hours in 43 different rotary and fixed-wing aircraft. Selected as an astronaut in 1996, he served as the crew support astronaut for Expedition 2 in 2001 and as NASA's Director of Operations in Star City, Russia in 2005. During STS-120, he will conduct three spacewalks and operate the shuttle robotic arm.

Paolo Nespoli

European Space Agency (ESA) astronaut Paolo Nespoli will be making his first spaceflight. He received a Bachelor of Science in aerospace engineering in 1988 and a Master of Science in aeronautics and astronautics in 1989 from the Polytechnic University of New York. He was selected as an astronaut by the Italian space agency (ASI) in July 1998 and, one month later, joined ESA's European astronaut corps. In August 1998, he was relocated to NASA's Johnson Space Center and assigned to the 27th NASA Astronaut Class. He was assigned to STS-120 in June 2006. As mission specialist 4 for the STS-120 mission, he will serve as one of the shuttle robotics officers for the survey of Discovery's wings and nose cap using the Orbiter Boom Sensor System. He will handle rendezvous tools in preparation for Discovery's rendezvous and docking with the International Space Station on flight day 3. He will serve as the intra-vehicular crew member, or spacewalk choreographer, for the first four spacewalks to help install Node 2, relocate the P6 truss and test shuttle heat shield repair techniques. He will be seated on the middeck for launch and on the flight deck for entry.

Daniel Tani

Veteran space shuttle flyer Daniel Tani will serve as a flight engineer aboard the International Space Station. He will travel to the station on STS-120 and stay with Expedition 16. He is scheduled to return to Earth on Atlantis during STS-122. A Massachusetts Institute of Technology graduate, Tani joined NASA in 1996. He served in numerous roles, including the EVA Branch and as a Crew Support Astronaut for Expedition 4. Tani flew on STS-108 in 2001 and has logged more than 11 days in space, including a spacewalk to wrap thermal blankets around ISS Solar Array Gimbals. During STS-120, Tani will perform the second spacewalk and operate the station robotic arm for the P6 relocation, Node 2 installation and various spacewalk activities.

This page intentionally left blank.

PAYLOAD OVERVIEW

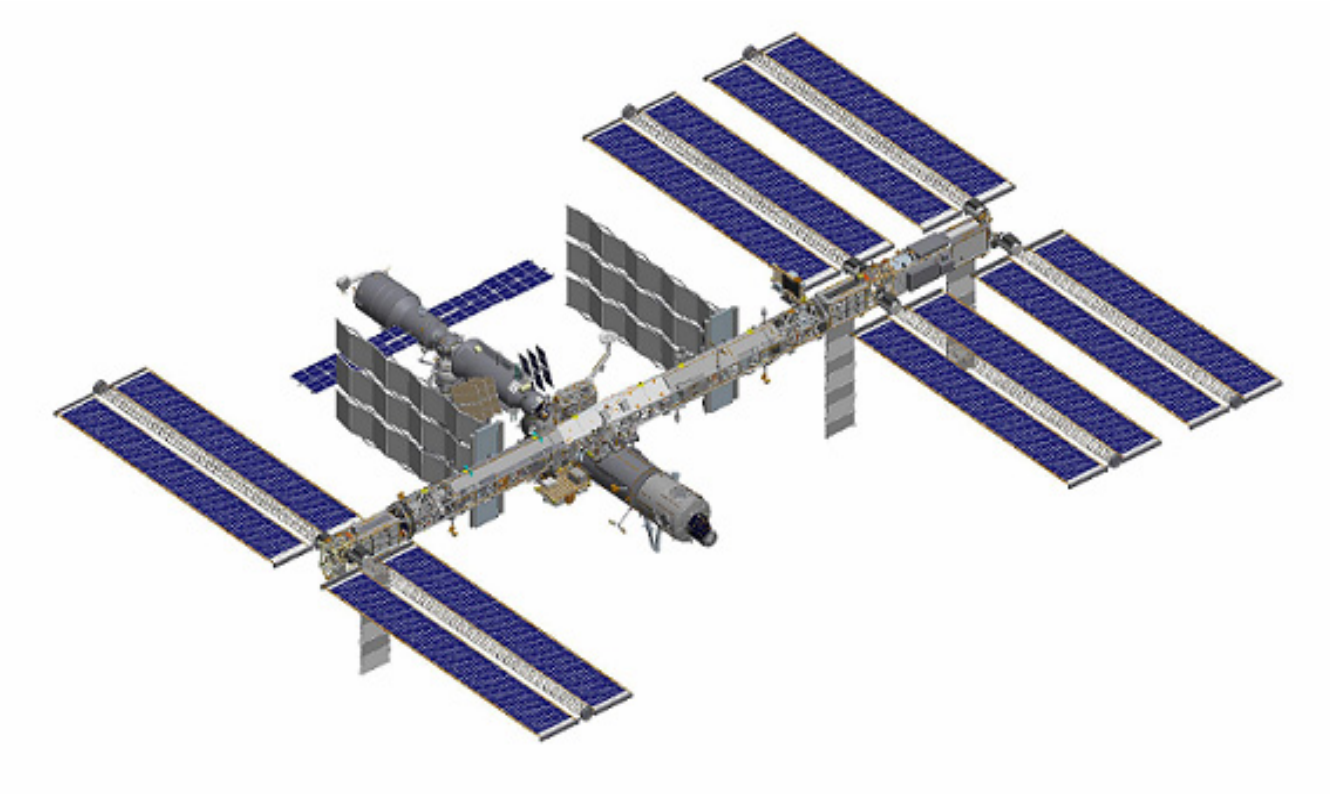

Harmony is shown attached to the Destiny module in the middle of the image above.

HARMONY (NODE 2)

Expansion of the International Space Station will continue with the delivery of the Harmony connecting module. Harmony will travel to the station inside space shuttle Discovery's payload bay during STS-120, also known as Assembly Flight 10A. Harmony's addition sets the stage for the arrival of new research laboratories.

Also known as Node 2, Harmony will be the first pressurized module added to the station since the Russian Pirs Docking Compartment was installed in September 2001. Harmony joins three other named U.S. modules on the station: the Destiny laboratory, the Quest airlock and the Unity node. The most recent addition was the Quest airlock in July 2001.

Harmony, measuring 23.6 feet long, 14.5 feet wide and weighing 31,500 pounds, is a utility hub, providing air, electrical power, water and other systems essential to support life on the station. It will distribute resources from the station's truss to the Destiny lab and to the European Space Agency's Columbus Research Laboratory and the Japanese Experiment Module (Kibo), when they are added to the station. The module will act as an internal connecting port and passageway to additional international science labs and cargo spacecraft.

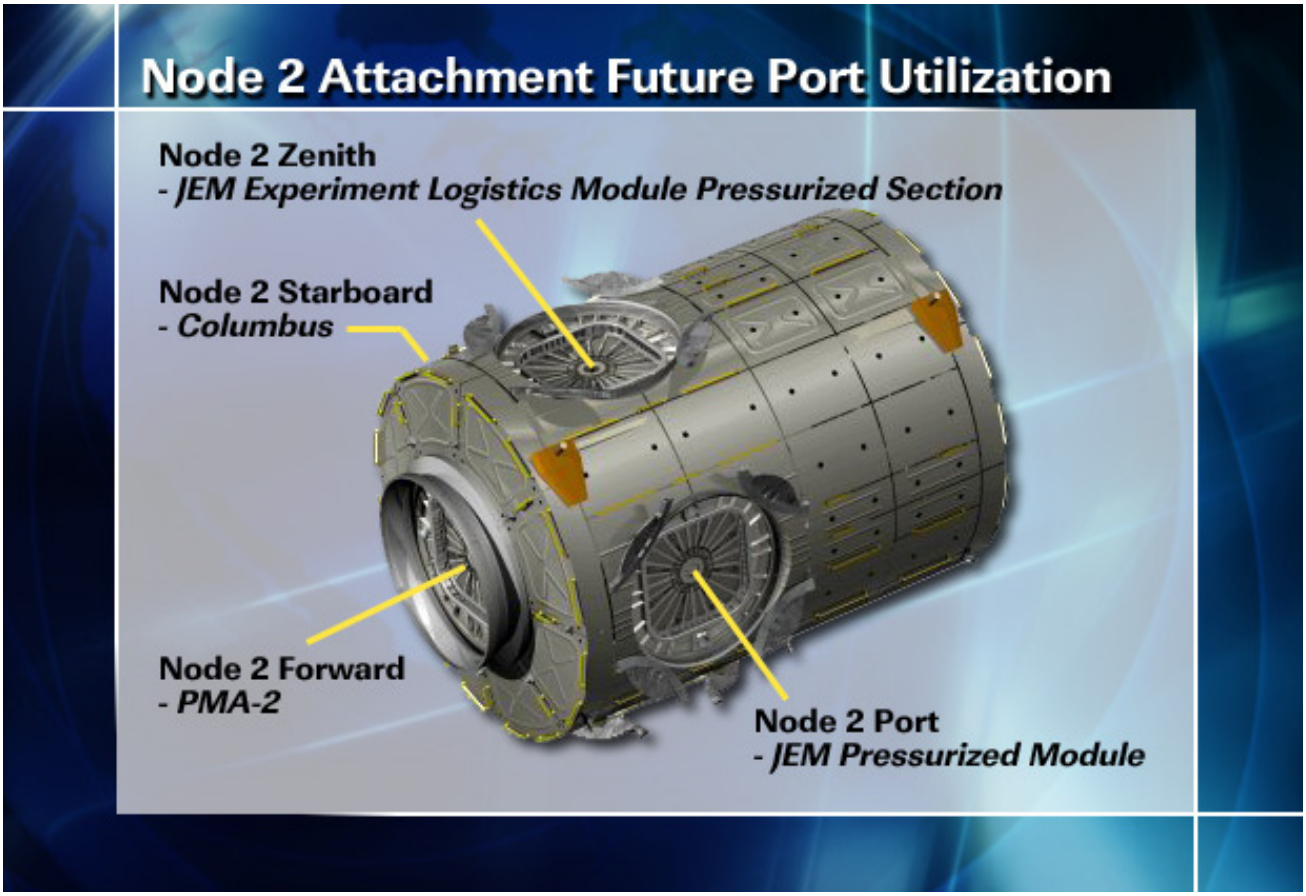

The picture above shows Harmony's future port utilization as the space station expands.

In addition to increasing the living and working space inside the station by more than 2,500 cubic feet, its exterior will serve as a work platform for the station's robotic arm, Canadarm2. Harmony is similar in shape to the Unity module, known also as Node 1, which was launched in 1998. Unity links the Destiny lab and the Russian Zarya Module.

Harmony was designed and built for NASA by Thales Alenia Space in Torino, Italy, as part of an agreement between NASA and the European Space Agency. The Boeing Company provided a large number of Harmony's subsystem components, including lights, fans, power switches and converters, racks, air diffusers, smoke detectors, hatches and Common Berthing Mechanisms. The node's subsystems were tested by Thales Alenia to ensure they operated within specifications common to all station elements.

Boeing also built, installed onto Harmony, and tested five Active Common Berthing Mechanisms (ACBMs). The mechanisms enable on-orbit mating and airtight seals between ISS pressurized elements. The ACBMs consist of powered, computer-controlled components that align capture and are secured to the passive CBMs. The CBM system is used throughout the station to mate arriving pressurized elements to the existing on-orbit platform. The system is comprised of two mating structures: the active half on the ISS and the passive half used on arriving structures.

Node 2 Specifications	
Dimensions:	Length: 23.6 ft. Diameter: 14.5 ft.
Weight:	31,500 lbs.
Pressurized Volume:	2,666 cubic ft.
Habitable Volume:	1,230 cubic ft.
Exterior Structure:	Aluminum cylindrical sections, 2 endcones
Equipment Racks:	8

While the active CBM contains all of the powered components and associated alignment hardware for berthing, the passive CBM configurations include the reciprocal mating fittings and alignment components, inclusive of the atmospheric seal. In a precisely controlled sequence of events, the ISS remote manipulation system positions the mating module passive CBM near the ISS active CBM for the automated berthing, resulting in a structurally sealed assembly.

Boeing employees are shown working on Harmony.

Node 2 will launch with 4 Avionics Racks, 2 Resupply Stowage Racks (RSRs) loaded with cargo, and 2 Zero-g Stowage Racks. Show here are the RSRs.

Naming the Module

On March 15, 2007, Node 2 received its name after a competition involving more than 2,200 students from 32 states. Six different schools submitted "Harmony."

A panel of NASA educators, engineers, scientists and senior agency managers selected the name because it symbolizes the spirit of international cooperation embodied by the station, as well as the module's specific role in connecting the international partner modules.

The Node 2 Challenge required students to learn about the space station, build a scale model and write an essay explaining their proposed name for the module that will serve as a central hub for science labs.

Harmony is the first U.S. piece of the space station named by people outside of NASA.

Installation

Harmony's installation is a two-step process. First, Discovery will dock to pressurized mating adapter-2 (PMA-2), located on the end of Destiny. Then, the crew will attach the new module to a temporary position on the outside of Unity. On orbit, PMA2 is outfitted with a Pressurized Common Berthing Mechanism.

After Discovery leaves, the Expedition 16 crew will use Canadarm2 to move PMA-2 to the forward port, onto one of the five active CMBs on Harmony. Then, the crew will use the arm to move and install Harmony to its permanent location at the end of Destiny.

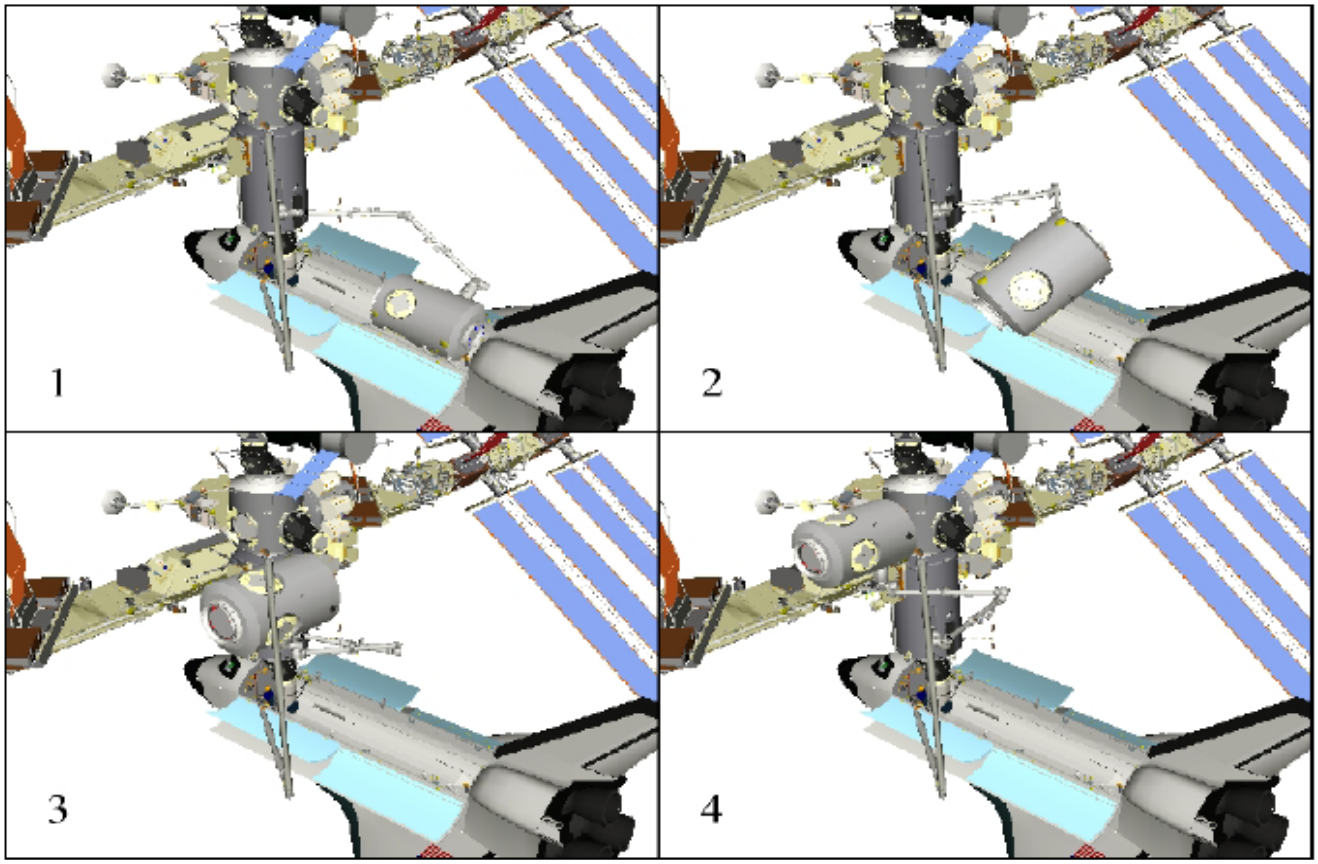

Shown here are the steps to install Unity Node 2 onto Node 1 using the shuttle and station robotic arms.

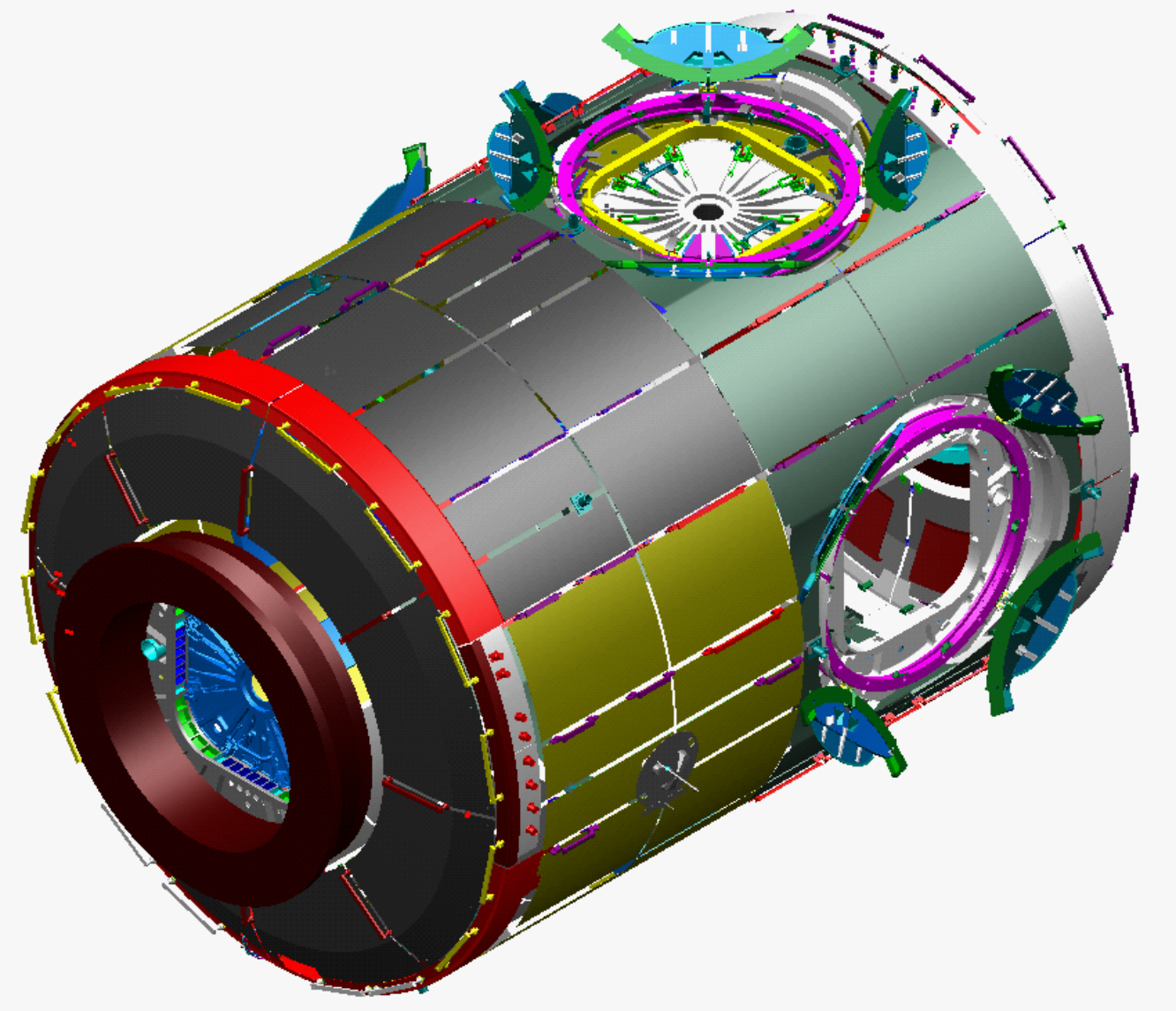

Aft View of Harmony

This page intentionally left blank.

STATION RELOCATION ACTIVITIES

PORT 6 SOLAR ARRAYS RELOCATION

The International Space Station derives its power from the conversion of solar energy into electrical power. The P6 Photovoltaic Power Module (PVM) — or Port 6 — performs this energy conversion and is one of four such modules on the station. (One more, S6, will be launched on STS-119.) The P6 has four primary functions: the conversion or generation, storage, regulation and distribution of electrical power for the station. P6 has two identical PVMs that consist of two major elements called the Solar Array Assembly (SAA) containing two Solar Array Wings (SAW) connected to a mast. The wings are presently folded into a mast canister for relocation and eventual deployment. Most of the electronics are contained in the Integrated Equipment Assembly (IEA), which is designed to condition and store the electrical power collected by the photovoltaic arrays for use aboard the station.

The integrated truss segments started with Starboard 0 (S0) as the center assignment and were numbered in ascending order outward to the port and starboard sides. At one time, an S2 and P2 were planned, but those segments were eliminated when the station design was scaled back. From S0, the truss segments are P1, P3, P4, P5 and P6, and S1, S3, S4, S5, and S6.

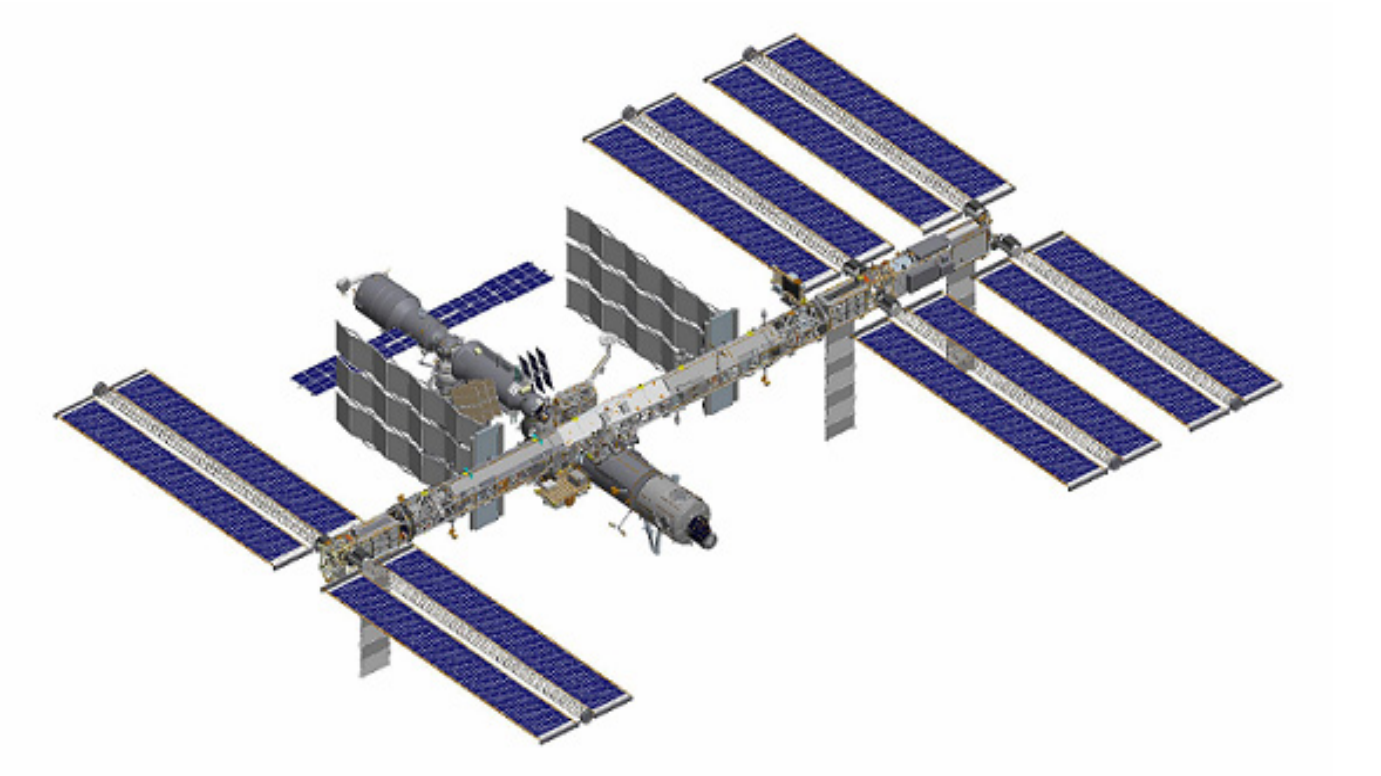

P6 is shown installed on the far right, while Harmony is shown attached to Destiny.

P6 Specifications	
Dimensions:	Width: 35 ft. Length: 240 ft. Retracted Dimensions: Width: 16 ft Length: 35 ft
Weight:	34,994 lbs.
Launched:	STS-97 11/30/2000
Cost:	$275,968,083

P6 is presently in orbit and attached to the truss segment Zenith 1 (Z1). On flight day 6 during the second spacewalk, P6 will be demated from the Z1 truss i.e. separated from the Rocketdyne Truss Attachment System (RTAS). During flight day 7, P6 will be handed off from the station's robotic arm to the shuttle's arm. During this time, the mobile transporter with the station's robotic arm attached will travel along the station's truss structure rails to work site number 8. P6 will then be handed off to the station's robotic arm. During flight day 8, the station's robotic arm will move P6 to the pre-install position. During the mission's third spacewalk on flight day 8, astronauts will attach P6 to the P5 short spacer. Following docking, the P6 solar array wings (2B/4B) will be deployed as well as the radiator. The solar arrays wings will be deployed on flight day 8. Due to the issues with the retraction of these arrays, testing was done to ensure the guide wires would not impact the deploy process. The key difference during deployment is that there is significantly more force available during deploy to pull the guide wire through the grommets so a snag is highly unlikely. In the event of a snag or any other issue, the crew is trained to identify the warning signs and immediately stop the deployment. The indicator is the rising of the array tension bar. This will ensure no structural damage to the array occurs. If needed, astronauts will perform a contingency spacewalk on flight day 10, if there are problems in getting the solar arrays properly deployed.

Following successful deployment, the P6 array will be brought back on line again along with P6 and P4. There are two Solar Array Wings on the P6 module yielding a total power generation capability approaching 66 kilowatts of unregulated power prior to distribution.

Major Elements

Photovoltaic Module (PVMs)

The primary functions of the power module are to collect, convert, store, and distribute electrical power to loads within the segment and to other station segments. Electrical power is the most critical resource for the station because it allows astronauts to live comfortably, safely operate the station and perform complex scientific experiments. Since the only readily available source of energy for spacecraft is sunlight, technologies were developed to efficiently convert solar energy to electrical power.

The PVMs use large numbers of solar cells assembled onto solar arrays to produce high power levels. NASA and Lockheed Martin developed a method of mounting the solar arrays on a "blanket" that can be folded like an accordion for delivery to space and then deployed to their full size once in orbit. The cells are made from purified crystal ingots of silicon that directly convert light to electricity for immediate use through a process called photovoltaics.

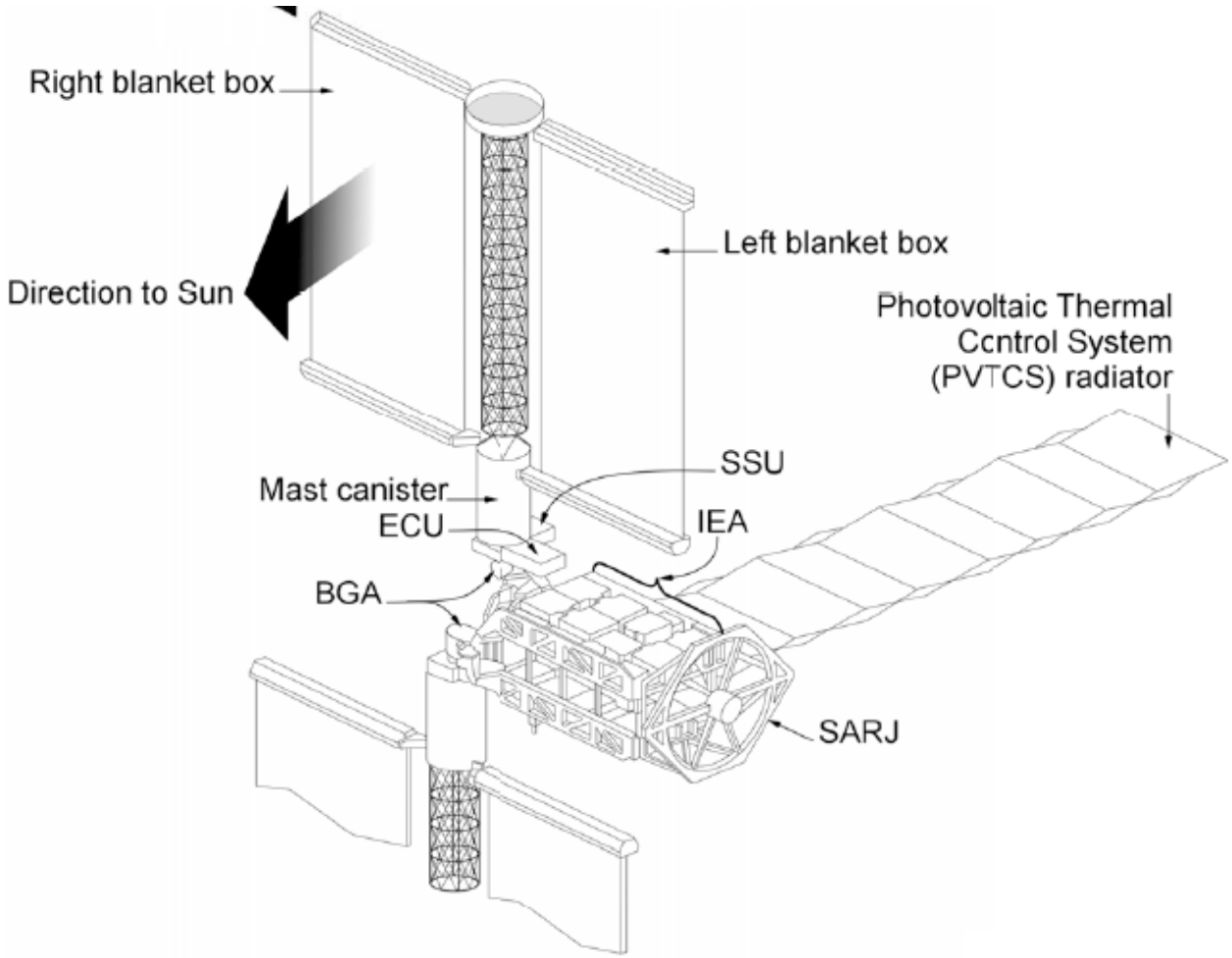

Photovoltaic Module

Gimbals are used to rotate the arrays so that they face the sun to provide maximum power to the space station. After the conversion process, the PVMs also use the electricity to recharge onboard batteries for continuous sources of electricity while the station is in the Earth's shadow. The complete power system, consisting of U.S. and Russian hardware, will generate approximately 80 kilowatts of total power.

PVM components were assembled by The Boeing Company in Tulsa, Okla., and Lockheed Martin in Sunnyvale, Calif., before final assembly and testing by Boeing at the Kennedy Space Center, Fla.

Solar Array Wings (SAW)

There are two SAWs designed, built and tested by Lockheed Martin in Sunnyvale, Calif., on the P6 module, and deployed in the opposite direction from each other. Each SAW is made up of two solar blankets mounted to a common mast. Before deployment, each panel is folded accordion style into a Solar Array Blanket Box measuring 20 inches high and 15 feet in length. Each blanket is only about 20 inches thick while in this stored position. The mast consists of interlocking battens that are stowed for launch

inside a Mast Canister Assembly (MCA) designed, built and tested by ATK-Able. The blanket boxes are deployed prior to SAW deploy. While the P6 SAWs are retracted for relocation, the blanket boxes will remain in the deployed position.

When fully deployed, the SAW extends 115 feet and spans 38 feet and extends to each side of the Integrated Equipment Assembly. Since the second SAW is deployed in the opposite direction, the total wing span is more than 240 feet.

Each SAW weighs more than 2,400 pounds and uses 32,800 solar array cells per wing, each measuring 8-cm square with 4,100 diodes. The individual cells were made by Boeing's Spectrolab and ASEC. There are 400 solar array cells to a string and there are 82 strings per wing. Each SAW is capable of generating nearly 32.8 kilowatts of direct current power. There are two SAWs on the P6 module yielding a total power generation capability approaching 66 kilowatts of unregulated power prior to distribution.

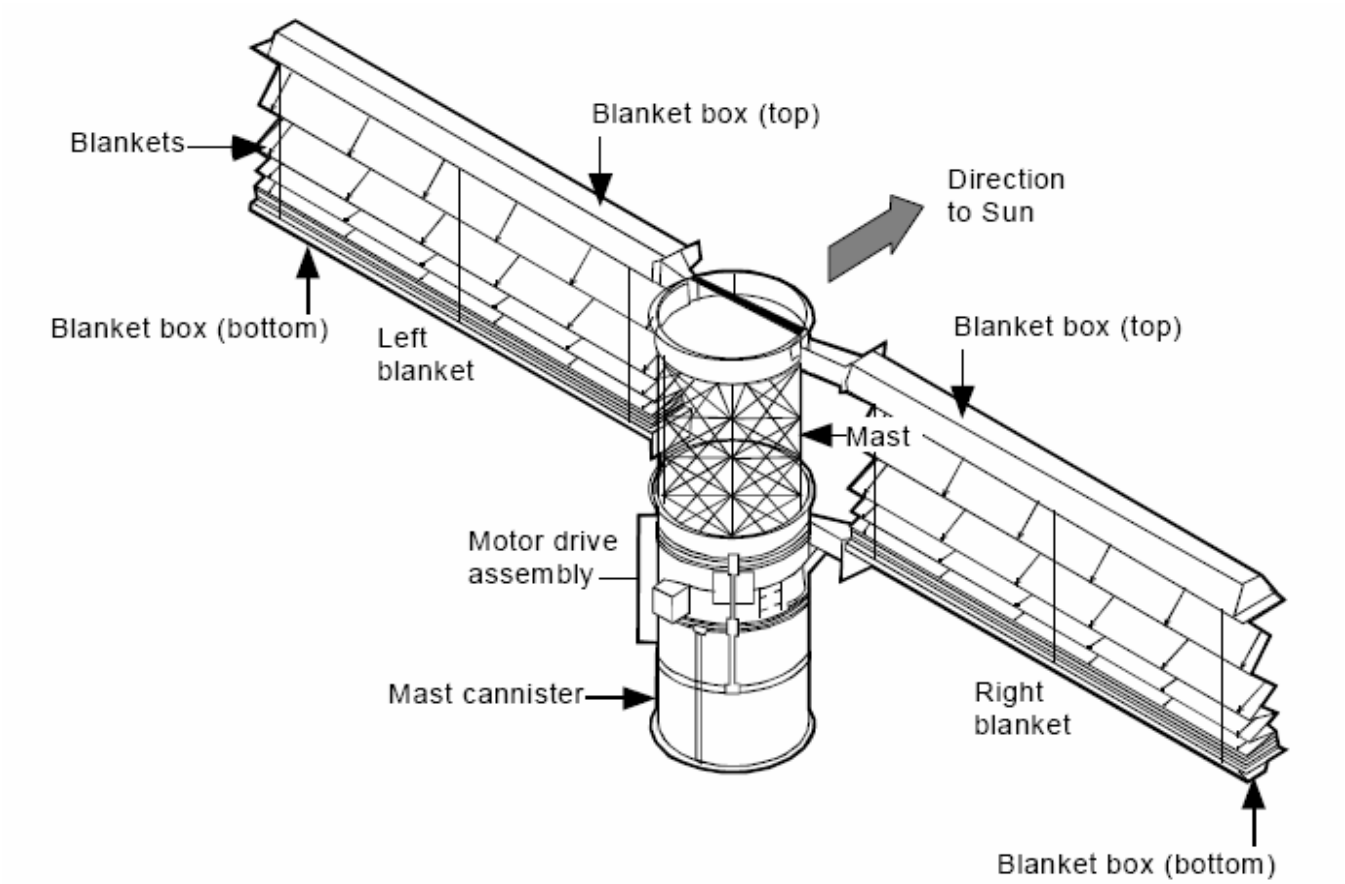

Solar Array Wings

Beta Gimbal Assembly (BGA)

The solar array wings also are oriented by the Beta Gimbal Assembly, which can change the pitch of the wings by spinning the solar array. The assembly measures 3- by 3- by 3 feet. The assembly's most visual functions are to deploy and retract the SAW and rotate it about its longitudinal axis. The assembly consists of three major components: the Bearing, Motor and Roll Ring Module (BMRRM), the Electronic Control Unit (ECU) and the Beta Gimbal Transition Structure. The BGA was designed by Boeing Rocketdyne in Canoga Park, Calif., which has since been acquired by Pratt and Whitney. The Sequential Shunt Unit (SSU) that serves to manage and distribute the power generated from the arrays also is mounted on each assembly platform. The Sequential Shunt Unit was designed by the company Space Systems/Loral.

Both the Solar Alpha Rotary Joints (SARJ) (located between the P3 and P4 and the S3 and S4 elements) and Beta Gimbal Assemblies are pointing mechanisms and mechanical devices used to point the arrays toward the sun. They can follow an angle target and rotate to that target in the direction toward the sun. In-orbit controllers continuously update those targets so it keeps moving continuously as the station orbits the Earth approximately every 90 minutes, maintaining contact with the sun at the same orbital rate. The SARJ mechanism, which rotates the P4 and P6 (and its companion S4 and eventually S6) arrays like a large waterwheel, will move much more than the Beta Gimbal Assembly, which moves about four or five degrees per day, whereas the SARJ will rotate 360 degrees every orbit or about 4 degrees per minute.

Direct Current Switching Unit (DCSU)

Power received from each photovoltaic array assembly (PVAA) is fed directly into the appropriate DCSU, a high-power, multi-path remotely controlled unit used for primary and secondary power distribution, protection and fault isolation within the Integrated Equipment Assembly. The DCSU also distributes primary power to the station. During periods of sunlight, the DCSU routes primary power directly to the station from its PVAA and also routes power to the power storage system for battery charging. During periods of eclipse, the DCSU routes power from the power storage system to the station. The DCSU measures 28- by 40- by 12 inches and weighs 238 pounds.

Direct Current to Direct Current Converter Unit (DDCU)

Primary power from the DCSU is distributed to the DDCU, a power processing system that conditions the coarsely regulated power from the PVAA to 123 +/- 2 volt direct current. It has a maximum power output of 6.25 kilowatts. This power is used for all station operations employing secondary power. By transmitting power at higher voltages and stepping it down to lower voltages where the power is to be used, much like municipal power systems, the station can use smaller wires to transmit this electrical power and thus reduce launch loads. The converters also isolate the secondary system from the primary system and maintain uniform power quality throughout the station. The DDCU measures 27.25- by 23- by 12 inches and weighs 129 pounds.

Battery Charge/Discharge Unit (BCDU)

Primary power from the DCSU also is distributed to the three power storage systems within each channel of the IEA. The power storage system consists of a Battery Charge/Discharge Unit (BCDU) and two battery subassembly Orbital Replacement Units. The BCDU serves a dual function of charging the batteries during solar collection periods and providing conditioned battery power to the primary power busses (via the DCSU) during eclipse periods. The BCDU has a battery charging capability of 8.4 kilowatts and a discharge capability of 6.6 kilowatts. The BCDU also includes provisions for battery status monitoring and protection from power circuit faults. Commanding of the BCDU is from the Photovoltaic Controller Unit (PVCU). The BCDU measures 28- by 40- by 12 inches and weighs 235 pounds.

Battery Subassembly Orbital Replacement Units

Each battery subassembly ORU consists of 38 lightweight nickel hydrogen cells and associated electrical and mechanical equipment. Two battery subassembly ORUs connected in series are capable of storing 8 kilowatts of electrical power. This power is fed to the station via the BCDU and DCSU respectively. The batteries have a design life of 6.5 years and can exceed 38,000 charge/discharge cycles at 35 percent depth of discharge. Each battery measures 41- by 37- by 19 inches and weighs 372 pounds.

Sequential Shunt Unit (SSU)

The SSU is designed to coarsely regulate the solar power collected during periods of isolation — when the arrays collect power during sun-pointing periods. A sequence of 82 separate strings, or power lines, leads from the solar array to the SSU. Shunting, or controlling, the output of each string regulates the amount of power transferred. The regulated voltage setpoint is controlled by a computer located on the IEA and is normally set to around 160 volts. The SSU has an overvoltage protection feature to maintain the output voltage below 200 V DC maximum for all operating conditions. This power is then passed through the Bearing Motor and Roll Ring Module (BMRRM) to the DCSU located in the IEA. The SSU measures 32- by 20- by 12 inches and weighs 185 pounds.

Photovoltaic Thermal Control System (PVTCS)

To maintain the electronics at safe operating temperatures in the harsh space environments, they are conditioned by the PVTCS. The PVTCS consist of ammonia coolant, 11 coldplates, two Pump Flow Control Subassemblies (PFCS) and one Photovoltaic Radiator (PVR).

The coldplate subassemblies are an integral part of the IEA structural framework. Heat is transferred from the IEA orbital replacement unit electronic boxes to the coldplates via fine interweaving fins located on both the coldplate and the electronic boxes. The fins add lateral structural stiffness to the coldplates in addition to increasing the available heat transfer area.

Pump Flow Control Subassemblies (PFCS)

The PFCS is the heart of the thermal system, consisting of all the pumping capacity, valves and controls required to pump the heat transfer fluid to the coldplates and radiator, and regulate the temperature of the thermal control system ammonia coolant. The PVTCS is designed to dissipate 6,000 watts of heat per orbit on average and is commanded by the IEA

computer. Each PFCS consumes 275 watts during normal operations and measures approximately 40- by 29- by 19 inches, weighing 235 pounds.

Photovoltaic Radiator (PVR)

The PVR — the radiator — is deployable on orbit and comprised of two separate flow paths through seven panels. Each flow path is independent and is connected to one of the two PFCSs on the IEA. In total, the PVR can reject up to 14 kilowatts of heat into deep space. The PVR weighs 1,633 pounds and when deployed measures 44- by 12- by 7 feet.

P5 Long Spacer

The P5 Long Spacer physically separates the P6 solar arrays from the P4 solar arrays.

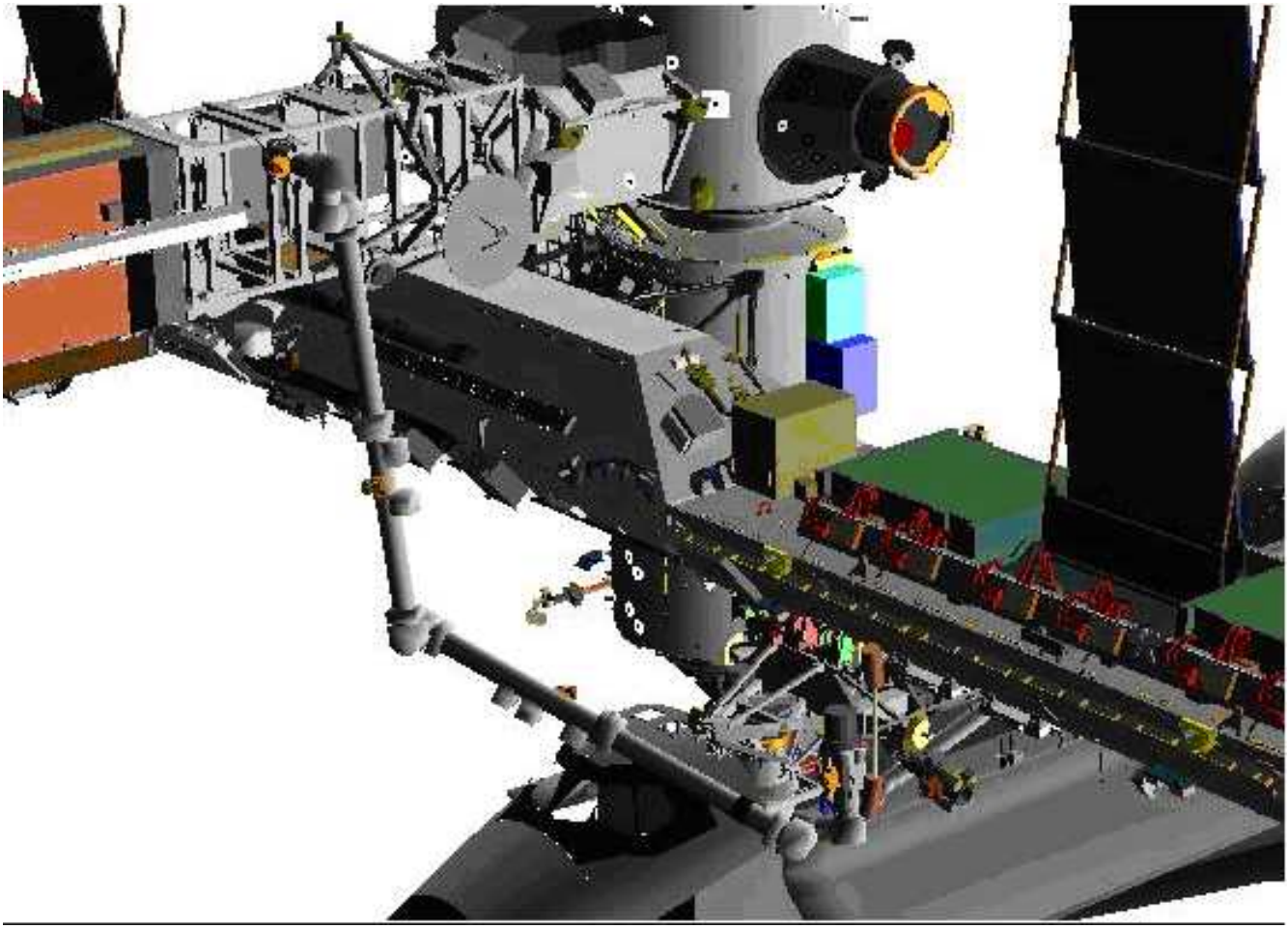

P6 uninstall using Space Station's Remote Manipulator System (robotic arm)

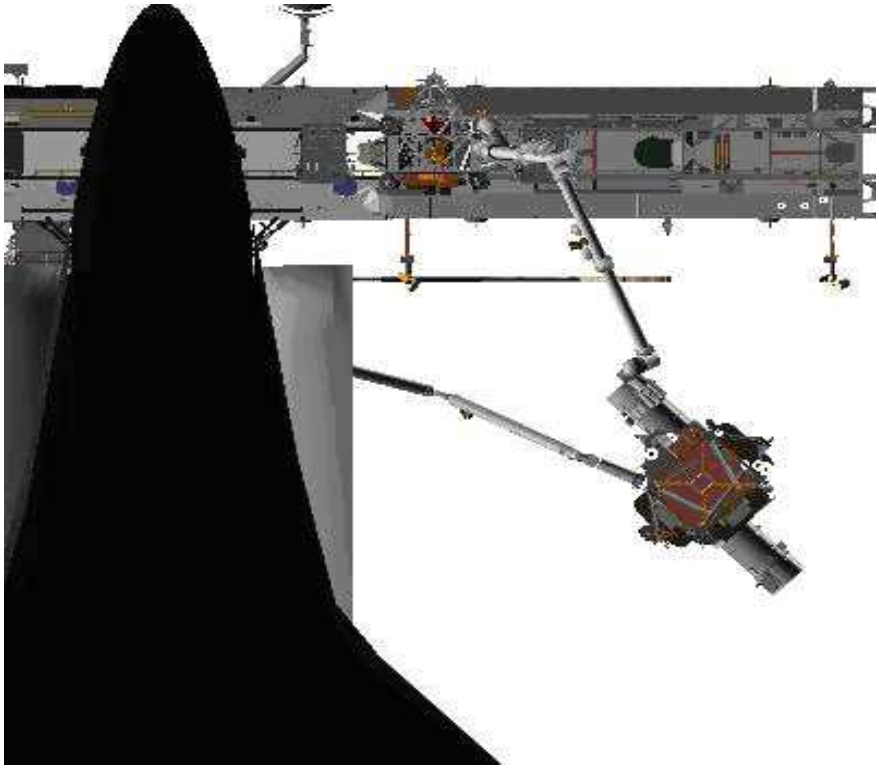

P6 handoff from the Space Station Remote Manipulator System (SSRMS) to Shuttle Remote Manipulator System (SRMS) and SSRMS ungrapple

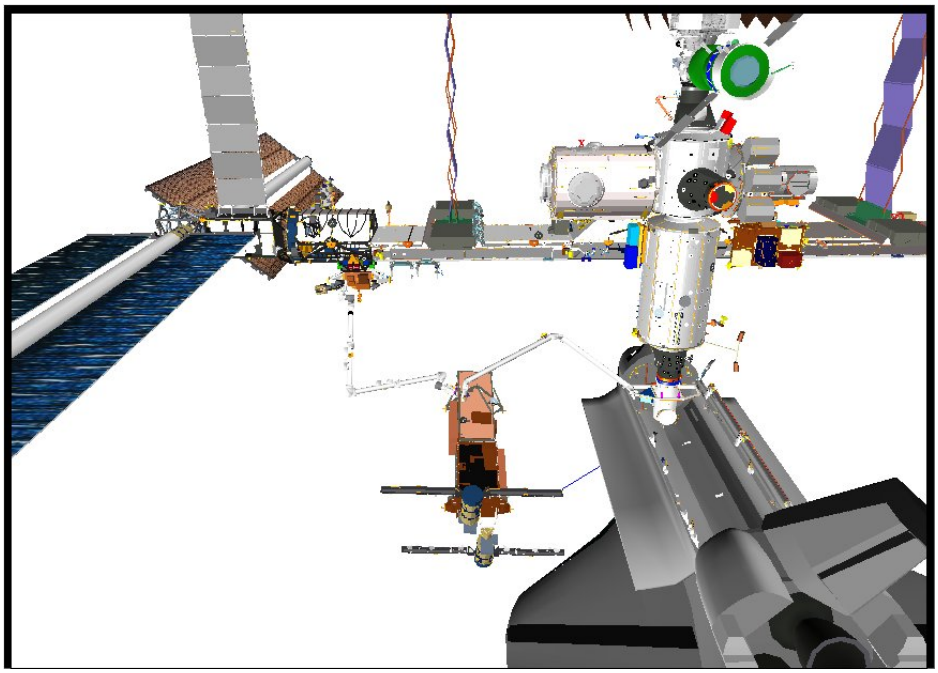

Shuttle Remote Manipulator System (SRMS) handoff of P6 to the SSRMS at Worksite 8

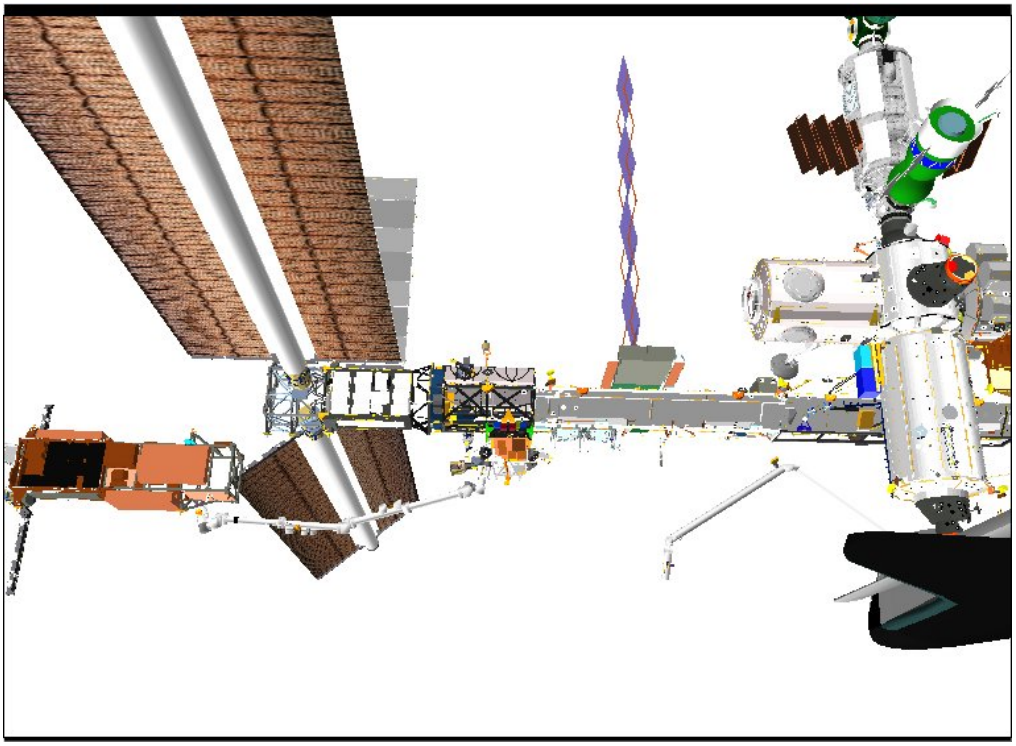

The station crew maneuvers P6 to the pre-install position.

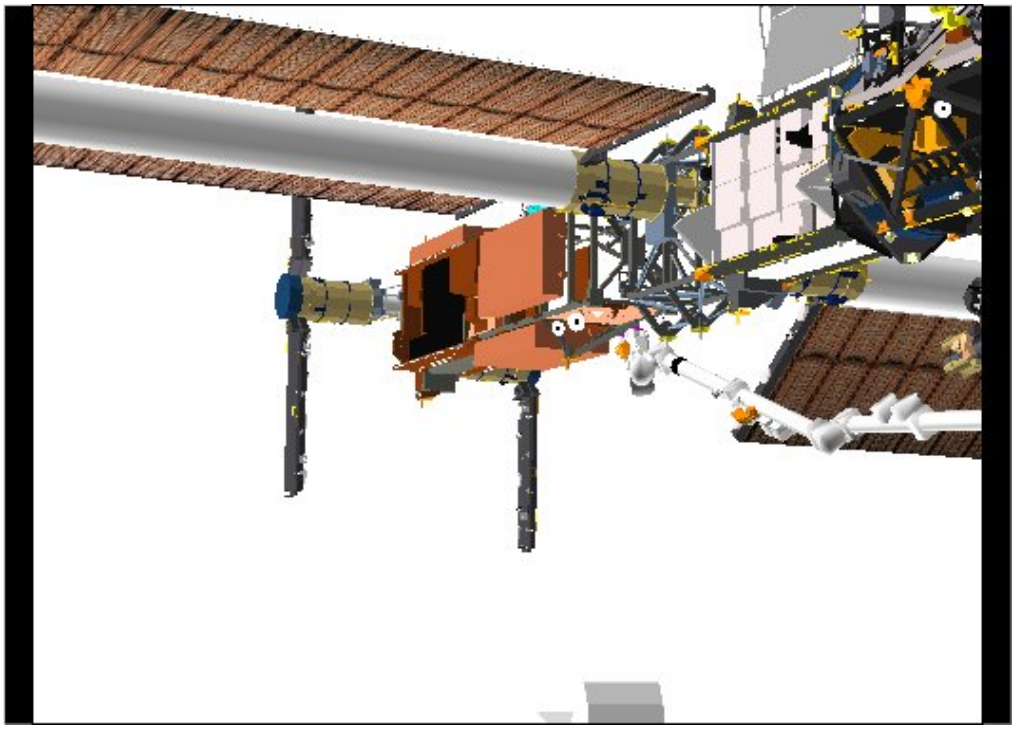

The crew drives the manual capture latch and bolt mechanisms to install P6 onto P5.

PRESSURIZED MATING ADAPTER-2 (PMA-2) RELOCATION

The Boeing-built Pressurized Mating Adapters (PMA) permit pressurized spacecraft to dock with one-another despite differences in the diameters of the spacecraft adapters. They also provide passageways for crew, equipment and supplies.

The International Space Station uses three Pressurized Mating Adapters (PMAs). PMAs one and two were launched with the Unity module aboard STS-88 on Dec. 4, 1998. The third launched aboard STS-92 on Oct. 11, 2000, and installed on the Unity Nadir port in preparation of Destiny laboratory installation. PMA-2 was temporarily relocated off of Node 1 to Zenith-1 (Z-1) Manual Berthing Mechanism until Destiny installation was completed on STS-98 on Feb. 7, 2001. Following installation of Destiny onto Unity, PMA-2 was relocated from Z-1 Manual Berthing Mechanism to Destiny's forward endcone, where it has remained until the STS-120 mission.

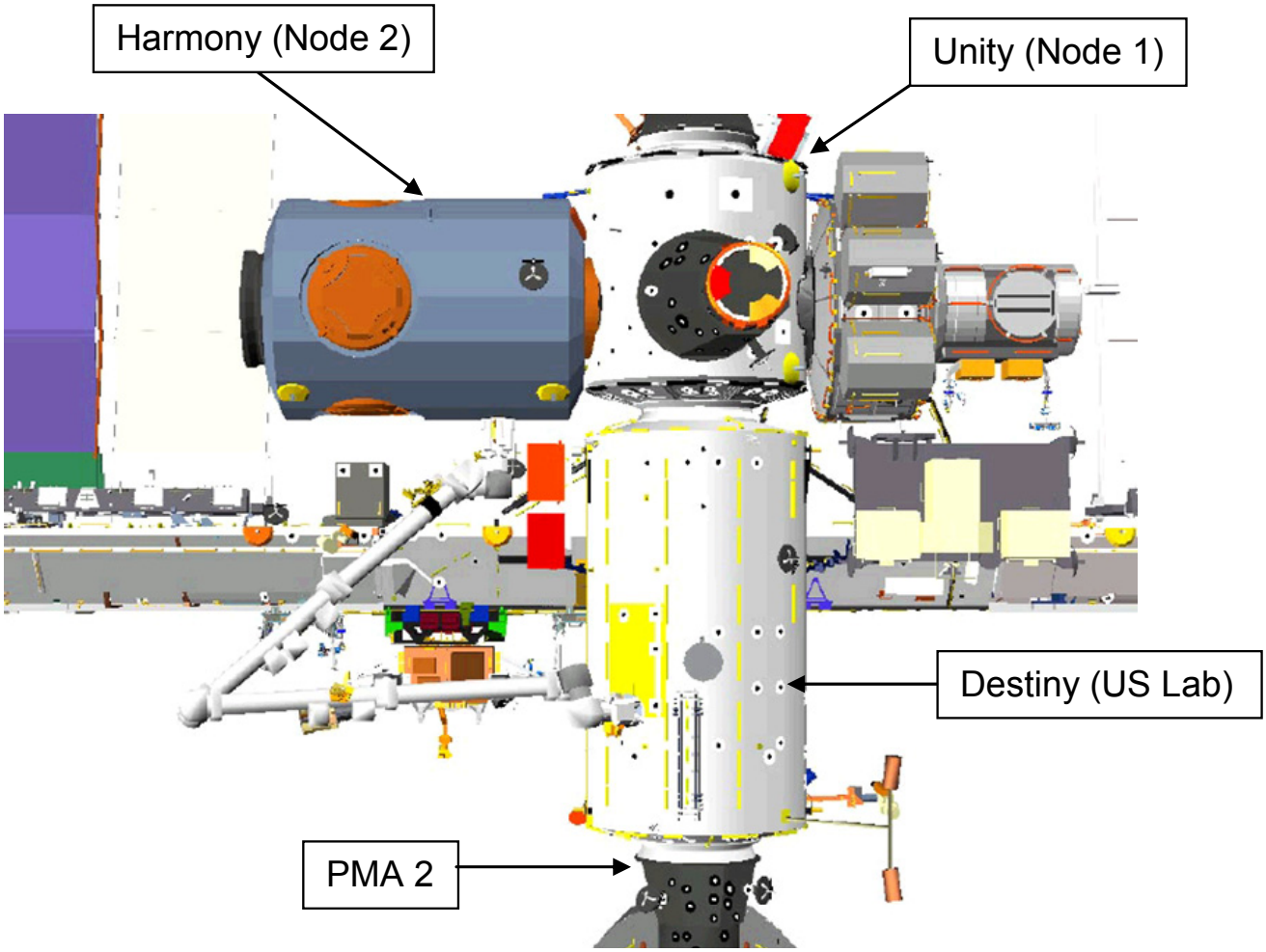

Pictured above is the Harmony (Node 2) module installed on the Unity (Node 1) port Common Berthing Mechanism. The Boeing-built Pressurized Mating Adapter-2 is shown at the bottom of the U.S. Destiny laboratory before relocation onto Harmony, scheduled after the shuttle undocks.

P6 Specifications	
Dimensions:	Width: 8 ft. Length: 5 ft.
Weight:	2,504 lbs.
Launched:	STS-88 12/04/1998
Cost:	$219,254,000

PMA-1 has computers mounted externally for use in command and control of Unity. PMA-2 and PMA-3 are interchangeable with each other. Because PMAs are pressurized and heated, they also serve as short, tunnel-like bridges that crews can use to go from one part of the station to another, as well as between the station and spacecraft that are docked there. PMAs also include mechanical interfaces, spacewalk hardware and thermal control equipment, electrical power subsystem and command and data handling passthroughs. PMA-2 also passes high pressure oxygen and nitrogen from the orbiter to the station.

All three PMAs perform the same basic function of connecting a Common Berthing Mechanism (CBM) port of a station module to the Androgynous Peripheral Attach System (APAS) docking port of another module or visiting spacecraft. PMAs 1, 2, & 3 each have a passive CBM port. Of the 3 PMAs, PMA-1 is the only one with an active APAS and it was operated only one time on STS-88 in mating the Functional Cargo Block (FGB) to PMA-1. PMAs 2 & 3 each have a passive APAS port. The CBM is on the big end of the PMA and the APAS is on the small end. The CBM is used to connect station hardware elements while the APAS is used for docking spacecraft. Airtight seals are formed by these devices that pull together, lock and seal -- a different method than the "bump-to-trip latch, then seal" procedure that most spacecraft use to dock.

During STS-120, space shuttle Discovery will dock to PMA-2. When a shuttle docks with the station, its final approach is at a relative velocity of one-tenth of a foot per second as it makes contact with PMA-2. As the latches automatically attach the two spacecraft together and once relative motion between the spacecraft stops, a shuttle astronaut retracts the docking ring on the shuttle's mechanism, closing latches to firmly secure the shuttle to the station.

On Aug. 30, 2007, PMA-3 was moved to the nadir hatch of Unity (Node 1) to make room for the temporary berthing of Harmony. During flight day 4 of Flight 10A, the space station robotic arm will move Harmony from the shuttle cargo bay to a temporary location at the port hatch of Unity.

PMA-2 is shown attached to the U.S. Destiny laboratory

At shuttle undock plus 2, the station's robotic arm will unberth PMA-2 from the U.S. Destiny laboratory and place it on the forward hatch of Harmony. At shuttle undock plus 4, the station arm then will move the integrated stack (PMA-2 and Node-2) to its final location — Destiny's forward endcone. The combined operation to relocate PMA-2 to its final position on Harmony is expected to take 10 to 12 hours with the actual robotic operation estimated to take about two hours.

Pressurized Mating Adapters are Boeing products, built in Huntington Beach, Calif. The tight seal that permits shirt-sleeved transit between station elements and spacecraft is provided in part by Common Berthing Mechanism technology.

On the day of shuttle undock, Harmony will be ingressed for the Centerline Berthing Camera System (CBCS) installation. The CBCS is needed to berth the PMA-2 to Harmony. The lab-PMA-2 umbilicals are disconnected during STS-120's fifth spacewalk. PMA-2 will be relocated two days after shuttle undocking. The lab-PMA-2 umbilicals will be reconnected during Expedition 16/10A Stage spacewalks planned for Nov. 14 (USOS EVA 10) and Nov. 18 (USOS EVA 11).

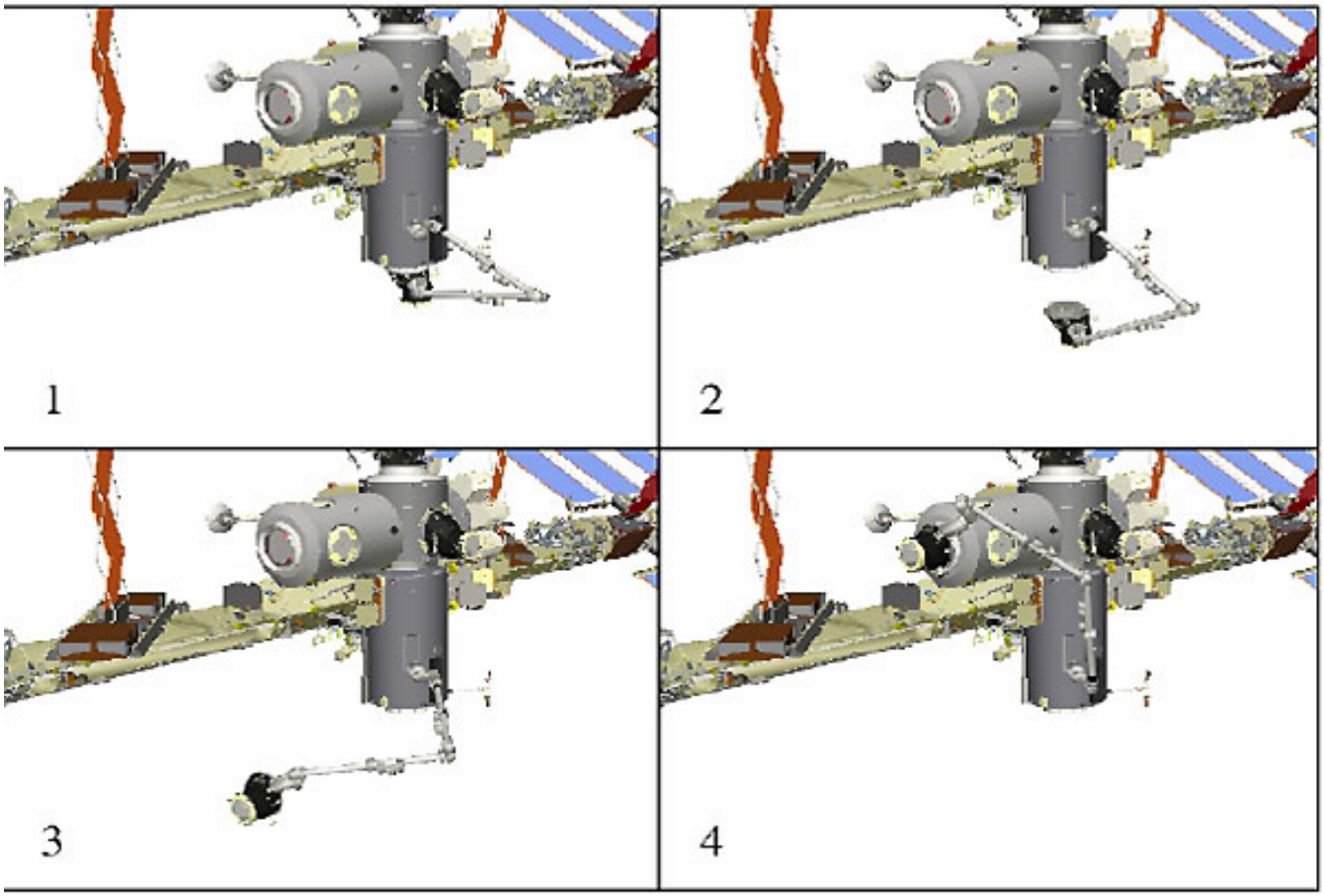

Relocation of PMA-2

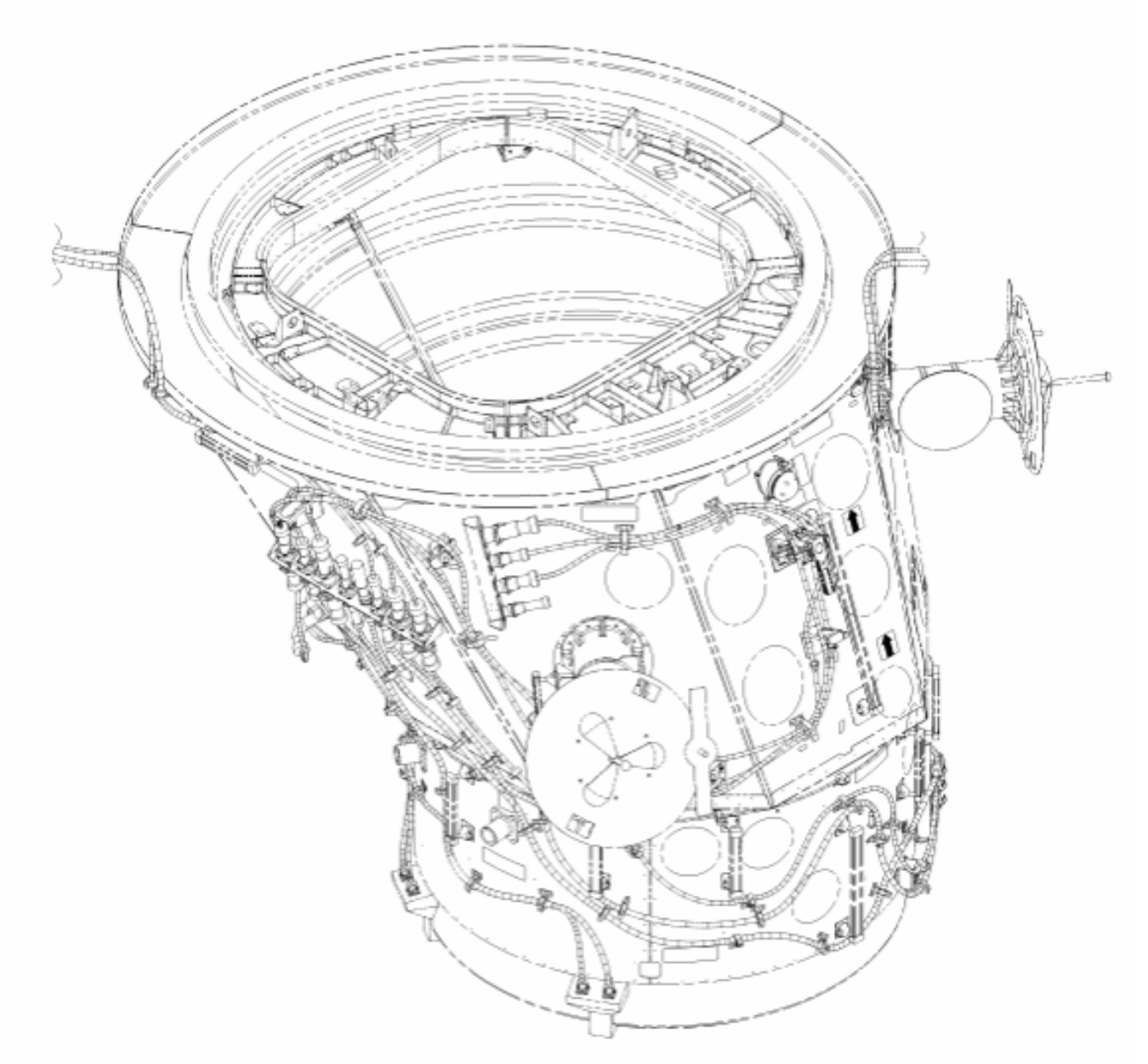

Shown here is a drawing of PMA-2. The outside diameter of the ACBM and PCBM diameter is approximately 80 inches. The ISS Common hatch opening is approx 48 inches x 48 inches. The APAS outside diameter is approximately 56 inches. APAS hatch opening is approximately 31.5 inches.

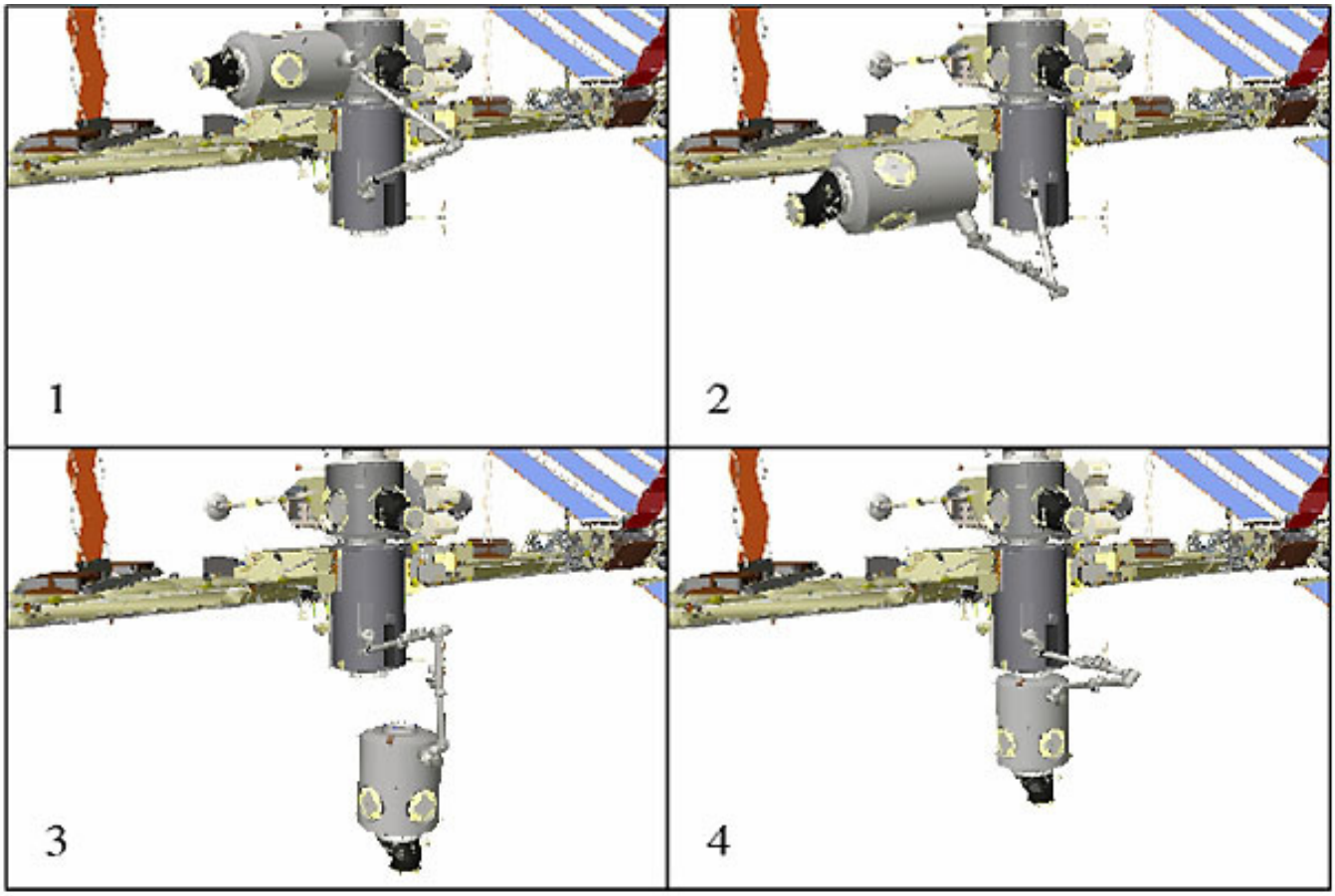

Relocation of Harmony (Node 2)

Shown here are the steps to relocate the Harmony (Node 2) module to its final position at the end of the Destiny lab. PMA-2 is shown here at the end of Harmony. This relocation will be done approximately four days after the space shuttle undocks.

RENDEZVOUS AND DOCKING

During STS-118, the Space Shuttle Endeavour flew into position for a photo survey by crewmembers aboard the International Space Station. A Russian spacecraft, docked to the station, can be seen in the right foreground.

The shuttle launch is timed precisely to place the orbiter on the correct trajectory and course for its two-day chase of the station. Periodic engine firings will gradually bring Discovery to about 50,000 feet behind the station — the starting point for a final approach.

About 2.5 hours before docking, Discovery's jets will be fired during what is called the Terminal Initiation burn to begin the final phase of the rendezvous. Discovery will close the final miles to the station during the next orbit.

As Discovery moves closer to the station, the shuttle's rendezvous radar system and trajectory control sensor will track the complex and provide range and closing rate data to the crew. During the final approach, Discovery will execute several small mid-course correction burns that will place the shuttle about 1,000 feet directly below the station. STS-120 Commander Pam Melroy then will manually control the shuttle for the remainder of the approach and docking.

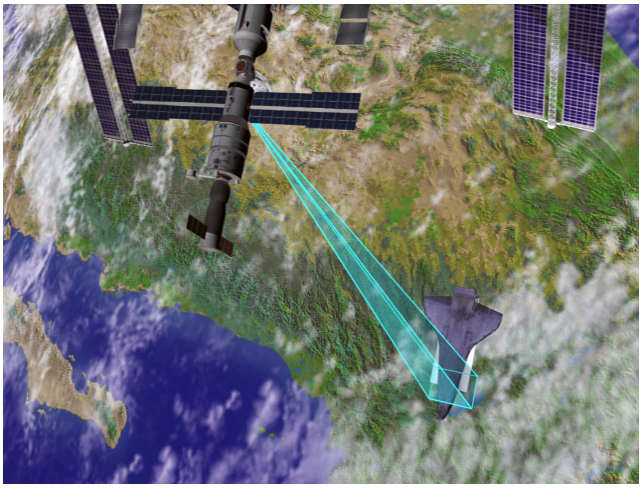

ISS crew members will photograph Discovery during the Rendezvous Pitch Maneuver.

Melroy will stop the approach 600 feet beneath the station to ensure proper lighting for imagery prior to initiating the standard Rendezvous Pitch Maneuver (RPM), or backflip.

Melroy will maneuver Discovery through a 9-minute, 360-degree backflip that allows the station crew to take as many as 300 digital pictures of the shuttle's heat shield.

On verbal cue from Pilot George Zamka to the station crew, Melroy will command Discovery to begin a nose-forward, three-quarter of a degree per second rotational backflip.

Both 400 and 800 mm digital camera lenses will be used to photograph Discovery by station crew members. The 400 mm lens provides up to 3-inch resolution and the 800 mm lens can provide up to 1-inch resolution. The imagery includes the upper surfaces of the shuttle as well as Discovery's underside, capturing pictures of the nose landing gear door seals, the main landing gear door seals and the elevon cove.

The photos will be taken out of windows in the Zvezda Service Module using Kodak DCS 760 digital cameras. The imagery is one of several inspection techniques to determine the health of the shuttle's thermal protection system, including the tiles and reinforced carbon-carbon wing leading edges and nose cap.

The photos will be downlinked through the station's Ku-band communications system for analysis by systems engineers and mission managers.

When Discovery completes its rotation, its payload bay will be facing the station.

Melroy then will move Discovery to a position about 400 feet directly in front of the station in preparation for the final approach to docking to the Destiny docking port.

The shuttle's crew members operate laptop computers processing the navigational data, the laser range systems and Discovery's docking mechanism.

Using a view from a camera mounted in the center of the Orbiter Docking System, Melroy will precisely match up the docking ports of the two spacecraft. If necessary, she will temporarily pause 30 feet from the station to ensure proper alignment of the docking mechanisms.

S118E09416

The ISS, as viewed by Space Shuttle Endeavour's STS-118 astronauts.

Rendezvous Approach Profile

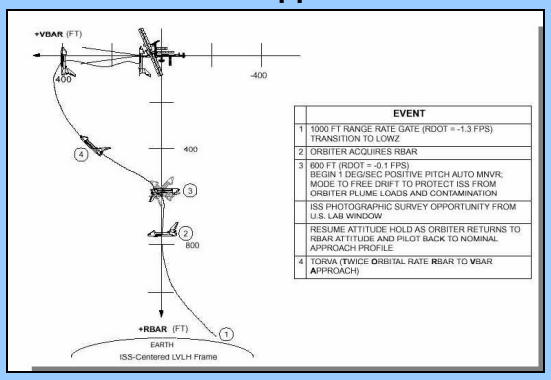

Space Shuttle Rendezvous Maneuvers

OMS-1 (Orbit insertion) – Rarely used ascent burn.

OMS-2 (Orbit insertion) – Typically used to circularize the initial orbit following ascent, completing orbital insertion. For ground-up rendezvous flights, also considered a rendezvous phasing burn.

NC (Rendezvous phasing) – Performed to hit a range relative to the target at a future time.

NH (Rendezvous height adjust) – Performed to hit a delta-height relative to the target at a future time.

NPC (Rendezvous plane change) – Performed to remove planar errors relative to the target at a future time.

NCC (Rendezvous corrective combination) – First on-board targeted burn in the rendezvous sequence. Using star tracker data, it is performed to remove phasing and height errors relative to the target at Ti.

Ti (Rendezvous terminal intercept) – Second on-board targeted burn in the rendezvous sequence. Using primarily rendezvous radar data, it places the orbiter on a trajectory to intercept the target in one orbit.

MC-1, MC-2, MC-3, MC-4 (Rendezvous midcourse burns) – These on-board targeted burns use star tracker and rendezvous radar data to correct the post Ti trajectory in preparation for the final, manual proximity operations phase.

For Discovery's docking, Melroy will maintain the shuttle's speed relative to the station at about one-tenth of a foot per second (while both Discovery and the station are traveling at about 17,500 mph), and keep the docking mechanisms aligned to within a tolerance of three inches. When Discovery makes contact with the station, preliminary latches will automatically attach the two spacecraft. Immediately after Discovery docks, the shuttle's steering jets will be deactivated to reduce the forces acting at the docking interface. Shock absorber springs in the docking mechanism will dampen any relative motion between the shuttle and the station.

Once the motion between the spacecraft has been stopped, the docking ring will be retracted to close a final set of latches between the two vehicles.

UNDOCKING, SEPARATION AND DEPARTURE

At undocking time, the hooks and latches will be opened, and springs will push the shuttle away from the station. Discovery's steering jets will be shut off to avoid any inadvertent firings during the initial separation.

Once Discovery is about two feet from the station and the docking devices are clear of one another, Zamka will turn the steering jets back on and will manually control Discovery within a tight corridor as the shuttle separates from the station.

Discovery will move to a distance of about 450 feet, where Zamka will begin to fly around the station in its new configuration. This maneuver will occur only if propellant margins and mission timeline activities permit.

Once Discovery completes 1.5 revolutions of the complex, Zamka will fire Discovery's jets to leave the area. The shuttle will move about 46 miles from the station and remain there while ground teams analyze data from the late inspection of the shuttle's heat shield. The distance is close enough to allow the shuttle to return to the station in the unlikely event that the heat shield is damaged, preventing the shuttle's re-entry.

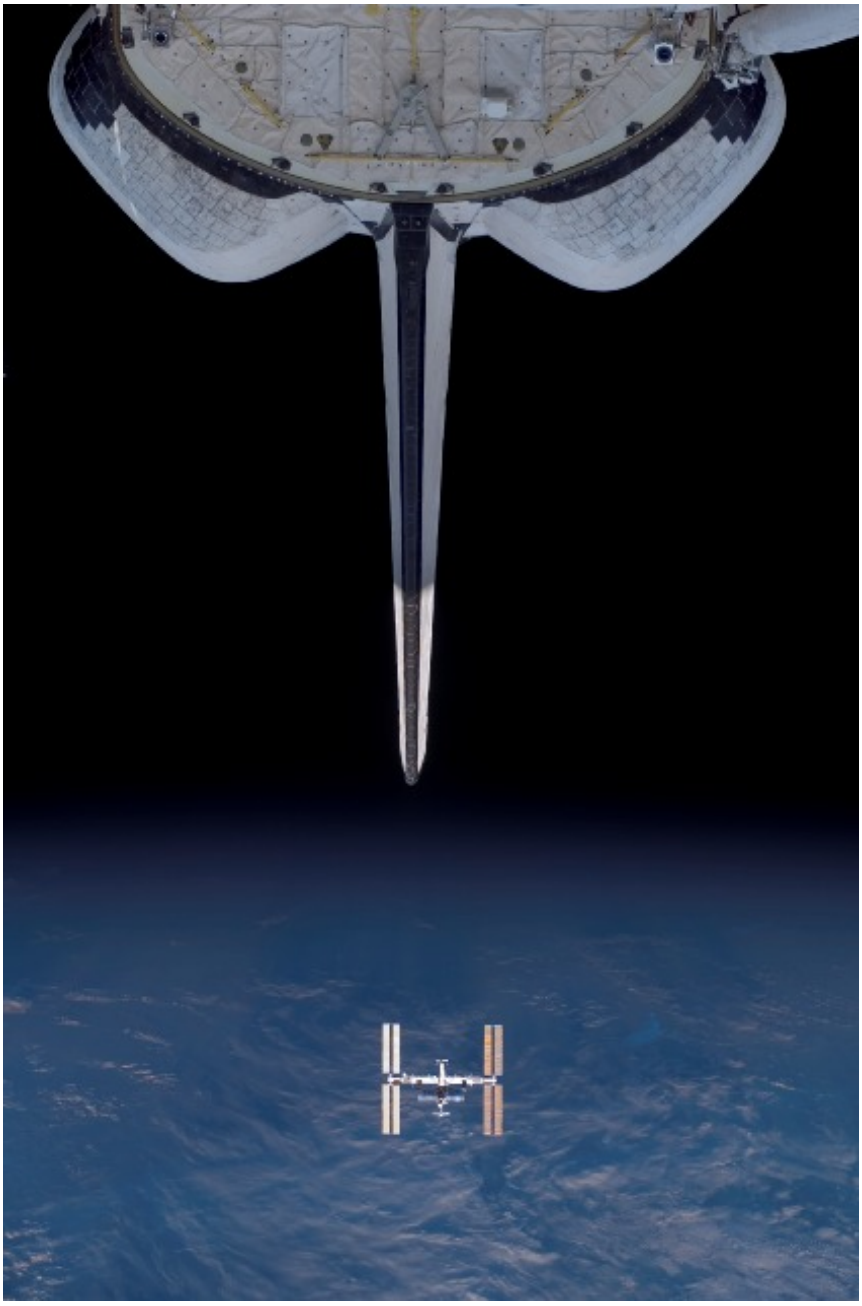

Backdropped by Earth's horizon and the blackness of space, the International Space Station appears to be very small as the Space Shuttle Endeavour departs from the station during STS-118.

SPACEWALKS

The primary objectives for STS-120's spacewalks are to temporarily install the Node 2 module, also known as Harmony, and relocate the station's P6 truss and solar arrays. The first three spacewalks, known as extravehicular activities or EVAs, will focus on these activities. The fourth spacewalk, recently added to the mission, involves a demonstration of space shuttle thermal protection system repair techniques. The fifth and final spacewalk prepares for the relocation of Harmony and the Pressurized Mating Adapter-2, scheduled to occur just after the shuttle mission.

The spacewalks are planned on flight days 4, 6, 8, 10 and 11. Five spacewalks is the most conducted during a shuttle mission to the space station. STS-120 also is the first mission with five different spacewalkers.

Scott Parazynski and Doug Wheelock will perform the first, third and fourth spacewalks.

Veteran astronaut Scott Parazynski is the lead spacewalker and will conduct the first four excursions. He will be joined by first time spacewalker Doug Wheelock on the first, third and fourth spacewalks. Expedition 16 Flight Engineer Daniel Tani will conduct the second spacewalk with Parazynski. Expedition 16 Commander Peggy Whitson and Expedition 16 Flight Engineer Yuri Malenchenko will conduct the fifth spacewalk.

Mission Specialist Paolo Nespoli will be the intravehicular lead for the first four spacewalks, assisting the spacewalkers with their tasks from inside the spacecraft. Tani will be the intravehicular lead for the fifth spacewalk.

Wilson, Wheelock and Anderson will operate the space station's robotic arm for the Harmony installation, P6 relocation and various spacewalking tasks. Zamka will join Wilson in robotic arm operations to use the shuttle arm for tasks during the third spacewalk.

Parazynski and Daniel Tani will conduct the second spacewalk.

The spacewalkers will be identifiable by various markings on their spacesuits. Parazynski's suit will have solid red stripes. Wheelock will wear an all-white spacesuit. Tani's suit will have broken red stripes. Whitson's suit will have a red stripe and a candy cane stripe. Malenchenko will wear a suit with candy cane stripes.

The spacewalks will start from the station's Quest airlock. As in recent missions, the astronauts will prepare for the EVA by using the "campout" prebreathe protocol, spending the night before the spacewalk in the airlock. The prebreathe exercise purges nitrogen from the astronauts' systems so they avoid the condition known as the bends.

During the campout, the spacewalking crew members isolate themselves in the airlock. The airlock's air pressure is lowered to 10.2 psi while the station is kept at 14.7 psi, or near sea-level pressure. Upon rising, the astronauts don oxygen masks, and the airlock's pressure is raised again to 14.7 psi for an hour. After breakfast, the pressure is lowered back to 10.2 psi for an additional hour as the spacewalk suits are donned. An additional 30 minutes in the suits completes the protocol. As a result, the crew can get outside earlier to perform the day's tasks.

Expedition 16 crew members Peggy Whitson and Yuri Malenchenko will perform the fifth spacewalk.

EVA-1

EV1: Parazynski

EV2: Wheelock

IV: Nespoli

Duration: 6.5 hours

EVA Operations:

- Retrieve the S-band Antenna Structural Assembly (SASA) from Z1 truss
- Prepare Harmony for removal from Discovery's cargo bay
    - Install the Payload and Data Grapple Fixture on Harmony
    - Remove contamination covers and caps
    - Disconnect power cables from Discovery's cargo bay
- Disconnect P6/Z1 fluid umbilicals

Wilson, Tani and Anderson will position the station's robotic arm outside the Quest airlock. Wheelock will ride on the end of the arm for the S-band Antenna Structural Assembly removal and to carry it to Discovery's payload bay for return to Earth. Parazynski will "free float" (not attached to a foot restraint) to complete this task.

Both crew members will work in Discovery's payload bay to prepare Harmony for removal. They will secure a Payload and Data Grapple Fixture onto Harmony that could not be in place during launch, remove contamination covers and disconnect the power cables linking Harmony to Discovery.

The station robotic arm operators then will remove Harmony from the payload bay and begin moving it toward its position on Node 1, also known as Unity.

Moving on to prepare P6 for its relocation, Parazynski will disconnect four ammonia fluid umbilicals from P6 and mate them to Z1. Meanwhile, Wheelock will prepare a shroud for the aft radiator of P6. Both crew members will work together to install that shroud and two more on electrical boxes, called sequential shunt units, on P6. The shrouds will keep the hardware warm during the truss' relocation.

EVA-2

EV1: Parazynski

EV3: Tani

IV: Nespoli

Duration: 6.5 hours

EVA Operations:

- Detach the P6 truss
- Remove and replace a remote power control module
- Externally outfit Harmony

Before the spacewalk begins, Wilson, Wheelock and Anderson will grapple the P6 truss with the station robotic arm. At the beginning of the spacewalk, Parazynski and Tani will disconnect nine cables from P6 to remove it from Z1. Parazynksi also will disconnect grounding straps and bolts that hold P6 in place.

The robotic arm operators then will remove P6 and begin its relocation process.

Tani will work on the starboard 1 (S1) truss to reconfigure connectors that will allow the radiator on S1 to be deployed from the ground later. He then will work inside the S0 truss to

re-route electrical lines that will lead to the P6 truss once it is re-installed outboard on the truss structure. Tani will complete the replacement of a remote power control module that is associated with the station's robotic arm and its use of a grapple fixture on Harmony as an operating base.

Parazynski will work on external outfitting of Harmony by installing 11 handrails, two gap spanners, three worksite interfaces, an electrical connector and five trunion and keel pin covers. Four pins will be removed from the radial berthing mechanisms, and launch restraints will be released on the zenith berthing petals and 16 caps under micrometeoroid debris covers. Tani will assist with the outfitting once his tasks on the truss are complete.

Together, the spacewalkers also will affix the power and data grapple fixture that was temporarily put in place during the first spacewalk.

EVA-3

EV1: Parazynski

EV2: Wheelock

Duration: 7 hours

EVA Operations:

- Install the P6 truss
- Transfer the main bus switching unit to the station

Parazynski and Wheelock will work at the outboard end of the port truss to assist with the robotic arm attachment of P6 in its new location on P5. P6 will be positioned 130 cm away and 2 cm forward of the truss. The spacewalk crew will provide verbal cues to the robotic arm operators, Tani, Wilson and Anderson, during the installation. Once P6 is in place, Wheelock will close the mechanical capture claw to secure it in place. They will install bolts on each corner for permanent attachment then release the capture latch. They will mate four umbilicals from P5 to P6 to provide power.

The spacewalkers then will move to the edge of P6 to remove the thermal shrouds from the electronic hardware, or sequential shunt units, which were installed during the first spacewalk to protect them.

Parazynski will release cinches on a P6 radiator to allow its deployment from the ground later. He then will move to the S1 truss to reconfigure the electrical connectors that allowed the ground to deploy the S1 radiators by this point in the mission. Parazynski then has time to complete various get-ahead tasks on the outside of the station.

Meanwhile, Wheelock will work from the end of the shuttle robotic arm, operated by Zamka and Wilson, to install the main bus switching unit spare hardware. Wheelock will get on the arm near the Destiny lab, ride it down to Discovery's cargo bay, retrieve the spare hardware and carry it up to an external storage platform. Parazynski will assist with bolting it in place on External Stowage Platform-2.

EVA-4

EV1: Parazynski

EV2: Wheelock

IV: Nespoli

Duration: 4 hours

EVA Operations:

Tile Repair Ablator Dispenser (T-RAD) Detailed Test Objective (DTO) 848

The primary purpose of the detailed test objective is to evaluate the Shuttle Tile Ablator-54 (STA-54) material and a tile repair ablator dispenser in a microgravity and vacuum environment for their use as a space shuttle thermal protection system repair technique.

Parazynski has been involved in the development of space shuttle thermal protection system repair techniques and will lead the testing during the spacewalk. Wheelock will assist with managing the tools and samples during the test.

The spacewalkers will setup for the test on the outside of the Destiny lab.

The Tile Repair Ablator Dispenser, or T-RAD, is similar to a caulk-gun. Parazynski will use the T-RAD to mix and extrude the STA-54 material into holes in several demonstration tiles. The crew members will watch for swelling of the material and work it in until it is smooth by tamping the material with foam-tipped tools.

The repaired samples and tools will be stowed in Discovery's cargo bay for return to Earth. The samples will undergo extensive testing on the ground.

EVA-5

EV4: Whitson

EV5: Malenchenko

IV: Tani

Duration: 6.5 hours

EVA Operations:

- Prepare for Pressurized Mating Adapter-2 relocation
    - Stow the station to shuttle power transfer (SSPTS) cable
    - Stow the Destiny Lab/Pressurized Mating Adapter-2 cables
    - Remove Harmony's active common berthing mechanism cover
    - Reconfigure S0 truss/Unity and Zarya Module/Pressurized Mating Adapter-1 power and jumper cables

For the primary objective of this spacewalk, Whitson and Malenchenko will work at the forward end of the Destiny lab. They will clear the area of cables and obstructions in preparation for the permanent installation of Harmony and its associated umbilical trays.

They will demate and stow the Station to Shuttle Power Transfer cables and eight cables between the Pressurized Mating Adapter-2 and the Destiny lab.

To make way for umbilical tray installation for Harmony, they will demate connectors on each side of the lab, and Whitson will remove a light and place it in the airlock.

Malenchenko then will reconfigure connectors on P1 that will allow the outboard radiators to be deployed from the ground.

The spacewalkers will work together to remove the active common berthing mechanism cover on Harmony to clear it for attachment to Destiny. They will remove a strap around the circumference of the cover, fold it and take it to the airlock for disposal.

Malenchenko will work behind the Z1 truss, near the Russian segment, to remove an electrical jumper for the power reconfigurations. Whitson will configure a power cable on the starboard side of Z1. She will retrieve hardware, called the base band single processor, and bring it inside for later return and upgrade on the ground.

The spacewalkers also will transfer tools needed for spacewalks after the shuttle leaves.

EXPERIMENTS

DETAILED TEST OBJECTIVES

Detailed Test Objectives (DTOs) are aimed at testing, evaluating or documenting space shuttle systems or hardware, or proposed improvements to the space shuttle or space station hardware, systems and operations.

The following DTOs are planned for STS-120:

DTO 848 TPS Repair Techniques (T-RAD/STA-54 Tile Repair Demo)

The primary purpose of the DTO is to evaluate Shuttle Tile Ablator-54 (STA-54) material and the tile repair ablator dispenser in a microgravity and vacuum environment for use as a space shuttle thermal protection system repair technique.

The Tile Repair Ablator Dispenser, or T-RAD, is similar to a caulk-gun and is designed to facilitate the repair of tiles near the orbiter's nose landing gear door, its two main landing gear doors and the external tank attachment doors.

During the test, an Extra-Vehicular Activity (EVA) crew member will use T-RAD to mix and extrude STA-54 material into holes in several demonstration tiles. The crew member will then work it in until it is smooth by tamping the material.

STA-54 is a two-part silicone-based ablator that consists of a base material and a catalyst. Once mixed, it resembles the consistency of cake-frosting. However, the material cures to the texture of a pencil eraser within 24 to 48 hours. During re-entry, the STA-54 dissipates heat by charring, thus protecting the shuttle tiles.

The T-RAD is comprised of a single, carbon dioxide-pressurized vessel separated into two main sections. Its mixing, delivery system consists of a static mixer, a 3-foot length of hose and an applicator gun that controls the flow of the extruding material. The assembly weighs 55 pounds and is about the same size as a hand-held vacuum.

DTO 853 In-Flight Evaluation for Areas of CO_2 Concentration

The purpose of the DTO is to evaluate carbon dioxide (CO_2) levels at specific times during the mission and in shuttle areas that have the potential to contain elevated levels. The DTO is being carried out over four missions: STS-118, STS-120, STS-122 and STS-123. During the missions, the data will be collected over a period of five days, during similar time periods and in similar locations.

The CO_2 levels will be recorded using the Carbon Dioxide Monitor (CDM) — a portable handheld device designed to monitor and quantify CO_2 concentrations.

The test was prompted by the STS-121 and STS-115 mission crews who reported experiencing stuffiness and headaches while sleeping in the middeck area. The symptoms are believed to most likely result from exposure to high levels of CO_2.

For the reported times during STS-121 and STS-115, the CO_2 levels within the crew module, as indicated by the vehicle instrumentation, were within the acceptable range. Additionally, for the course of the docked phase, the CO_2 levels in the shuttle tracked well with the levels

in the station. The station crew did not report any symptoms.

Data sampling locations for the test are dependent upon crew sleep locations and high activity locations because the post-sleep activity period and high activity periods are the times when CO_2 symptoms were reported by the two crews.

During the upcoming four missions, the crews will place the CDM in the middeck before they go to sleep so that ground controllers can monitor CO_2 levels continuously. The information will be used to identify CO_2 "hot spots" within the shuttle.

As a result, engineering evaluations will be made to fine-tune air exchange analyses, to determine if any configuration changes are necessary to optimize airflow and to determine if operational improvements are needed or if crew exposure time in identified areas should be limited.

CDM technology was successfully used to determine the existence of CO_2 pockets on the space station. The kit that will be used on the shuttle will include the CDM, filters and several battery packs. The CDM is capable of monitoring CO_2 in a localized area for either long or short durations of time, depending on the operating mode.

DTO 805 Crosswind Landing Performance (If opportunity)

The purpose of this DTO is to demonstrate the capability to perform a manually controlled landing in the presence of a crosswind. The testing is done in two steps.

1. Pre-launch: Ensure planning will allow selection of a runway with Microwave Scanning Beam Landing System support, which is a set of dual transmitters located beside the runway providing precision navigation vertically, horizontally and longitudinally with respect to the runway. This precision navigation subsystem helps provide a higher probability of a more precise landing with a crosswind of 10 to 15 knots as late in the flight as possible.

2. Entry: This test requires that the crew perform a manually controlled landing in the presence of a 90-degree crosswind component of 10 to 15 knots steady state.

During a crosswind landing, the drag chute will be deployed after nose gear touchdown when the vehicle is stable and tracking the runway centerline.

SDTO 17010-J/A, Multi-Protocol Converter, for live HDTV downlink with MPC and incorporation into HDTV system

The purpose of this Station Development Test Objective (SDTO) is to demonstrate the capability of the multi-protocol converter (MPC) before the installation and activation of the Japanese Experiment Module. The purpose of the JAXA supplied hardware is to provide high-definition television (HDTV) downlink to the space station, while simplifying the processing of the data system. The objectives include demonstrating the MPC system's ability to capture, process, and downlink a live digital HDTV signal from the station to the ground via the Ku-band system and to evaluate the long-term radiation tolerance of HD digital video cameras and of the high-speed, high-density electronic components and circuitry required to process digital HD video imagery for downlink. If time permits, the crew will also use the

JAXA-provided HD camcorder in conjunction with the Space Video Gateway system to evaluate downlink compression methods.

SDTO 13005-U ISS Structural Life and Life Validation and Extension

The purpose of this Station Development Test Objective (SDTO) is to guarantee safety of the station structure and crew by validating the on-orbit math models that were created for the space station. The test will be used to validate critical interface load and to help improve fatigue life prediction on the station.

During this mission, if crew time is available, three tests will be performed: one during the shuttle-station mated reboost, one during undocking and one during S5 truss installation. The tests will provide dynamic loads information for engineers to use in creating precise models that can be used for analysis. On-orbit data may aid in detecting structural anomalies, and the station's response to actual loading events aids in post-flight reconstruction of loads that help determine structural life usage.

The test requires actual or educated estimates of input (forcing function) and actual output (on-orbit sensor measurements) of the station response. Measurement of the force input (i.e., thruster firing sequences, video of crew activity, etc.) and station response will aid reconstruction of station loads and structural life usage over the life of the station, thus allowing life extension of the structure.

All of the on-orbit dynamic tests were also performed on the ISS-Orbiter mated configuration models.

SDTO 15003-U ISS Microgravity

The purpose of this Station Development Test Objective (SDTO) is to measure the space station microgravity environment. Operation of equipment on the station creates vibrations which can disturb — vibrate — science experiments. To minimize the vibration some experiments experience, station hardware is built with isolation systems, somewhat similar to automotive shocks and springs. Such systems reduce the vibration transmitted from station hardware to the experiment locations.

The biggest source of vibration on the station is created by the crew members during routine exercise. As crew members cycle, run, walk, or perform resistive exercise, large vibrations are created that can affect the experiments. This SDTO will measure the accelerations caused by the shuttle's ergometer, or stationary exercise bicycle, to determine the amount of load it places on the station and shuttle.

SHORT-DURATION RESEARCH TO BE COMPLETED DURING STS-120

The space shuttle and International Space Station have an integrated research program that optimizes use of shuttle crew members and long-duration space station crew members to address research questions in a variety of disciplines.

Validation of Procedures for Monitoring Crew Member Immune Function (Integrated Immune) will assess the clinical risks resulting from the adverse effects of spaceflight on the human immune system and will validate a flight-compatible immune monitoring strategy. Researchers will collect and analyze blood, urine and saliva samples from crew members before, during and after spaceflight to monitor changes in their immune systems.

Maui Analysis of Upper Atmospheric Injections (MAUI) will observe the space shuttle engine exhaust plumes from the Maui Space

Surveillance Site in Hawaii. The observations will occur when the shuttle fires its engines at night or twilight. A telescope and all-sky imagers will take images and data while the shuttle flies over the Maui site. The images will be analyzed to better understand the interaction between the spacecraft plume and the upper atmosphere.

Test of Midodrine as a Countermeasure Against Post-Flight Orthostatic Hypotension (Midodrine) is a test of the ability of the drug midodrine to reduce the incidence or severity of orthostatic hypotension. If successful, the drug will be employed as a countermeasure to the dizziness caused by the blood-pressure decrease that many astronauts experience upon returning to the Earth's gravity.

Perceptual Motor Deficits in Space (PMDIS) will investigate why astronauts experience difficulty with hand-eye coordination while in space. These measurements will be used to distinguish between three possible explanations: the brain not adapting to the near weightlessness of space; the difficulty of performing fine movements when floating in space; and stress due to factors such as space sickness and sleep deprivation. This experiment is a cooperative effort with the Canadian Space Agency.

Bioavailablity and Performance Effects of Promethazine during Spaceflight (PMZ) will examine the performance-impacting side-effects of promethazine and its bioavailability — the degree to which a drug can be absorbed and used by the parts of the body on which it is intended to have an effect. Promethazine is a medication taken by astronauts to prevent motion sickness.

Ram Burn Observations (RAMBO) is an experiment in which the Department of Defense uses a satellite to observe space shuttle orbital maneuvering system engine burns. The study's purpose is to improve plume models that predict the direction of the plume, or rising column of exhaust, as the shuttle maneuvers on orbit. Understanding this flow direction could be significant to the safe arrival and departure of spacecraft on current and future exploration missions.

Sleep-Wake Actigraphy and Light Exposure during Spaceflight – Short (Sleep-Short) will examine the effects of spaceflight on the sleep-wake cycles of the astronauts during shuttle missions. Advancing state-of-the-art technology for monitoring, diagnosing and assessing treatment of sleep patterns is vital to treating insomnia on Earth and in space.

International Partner Experiments

Fischer Rat Thyroid Low Serum 5 percent (FRTL5) will be used as a biological system to measure radiation and microgravity effects The FRTL5 rat thyroid cell strain was chosen because of its relevance to human physiology and medicine. Thyroid tissue is an ideal target for space radiation research because it is resistant to radiation's acute effects. This experiment should help improve knowledge of the effect of the space environment on the human body, especially with longer-term missions planned in the future.

Study of Space Environment Effects on PY17 Bacterial Spores onboard International Space Station (SPORE) is the study of PY17 bacterial spores response to the effects of microgravity and radiation. The experiment was conceived by high school students.

Samples and Hardware Returning on STS-120

Analysis of a Novel Sensory Mechanism in Root Phototropism (Tropi) sprouted Arabidopsis thaliana (thale cress) plants from seeds under different frequencies of light and levels of artificial gravity. The plants will be analyzed at the molecular level to determine what genes are responsible for successful plant growth in microgravity.

Capillary Flow Experiment (CFE) is a suite of fluid physics experiments that investigate capillary flows and flows of fluids in containers with complex geometries. Results will improve current computer models that are used by designers of low gravity fluid systems and may improve fluid transfer systems on future spacecraft.

Coarsening in Solid Liquid Mixtures-2 (CSLM-2) examines the kinetics of competitive particle growth within a liquid matrix. During this process, small particles shrink by losing atoms to larger particles, causing the larger particles to grow (coarsen) within a liquid lead/tin matrix. This study defined the mechanisms and rates of coarsening that govern turbine blades, dental amalgam fillings, iron copper, etc.

Commercial Generic Bioprocessing Apparatus Science Insert – 02 (CSI-02) is an educational payload designed to interest middle school students in science, technology, engineering and math by participating in near real-time research conducted aboard the station. Students will observe four experiments through data and imagery downlinked and distributed directly into the classroom via the Internet. The first is a seed germination experiment through which students will learn how gravity affects plant development. Small seeds will be developed on orbit in a garden habitat. The second experiment will examine yeast cells' adaptation to the space environment; the third will examine plant cell cultures. A fourth experiment will examine crystal formation using silicates — compounds containing silicon, oxygen and one or more metals. For the crystal growth experiment, students will grow crystals in their classrooms and analyze growth of those compared to the crystals grown in space.

Education Payload Operations – Kit C (EPO - Kit C) is an on-orbit plant growth investigation using basil seeds. The still and video imagery captured will be used as part of a national engineering design challenge for students in kindergarten through 12th grade. On the ground, students will grow basil seeds — control and flown seeds — in growth chambers to conduct their own plant growth science experiments.

Nutritional Status Assessment (Nutrition) is NASA's most comprehensive in-flight study to date of human physiologic changes during long-duration spaceflight; this includes measures of bone metabolism, oxidative damage, nutritional assessments and hormonal changes. This study will impact both the definition of nutritional requirements and development of food systems for future space exploration missions to the moon and Mars. The experiment also will help to understand the impact of countermeasures — exercise and pharmaceuticals — on nutritional status and nutrient requirements for astronauts.

Test of Reaction and Adaptation Capabilities (TRAC) will test the theory of brain adaptation during spaceflight by testing hand-eye coordination before, during and after the mission. This experiment is a collaborative effort between NASA and the Canadian Space Agency.

Smoke and Aerosol Measurement Experiment (SAME) will measure the smoke properties, or particle size distribution, from typical spacecraft fire smokes to identify ways to improve smoke detectors on future spacecraft.

Returning International Partner Experiments

Color consists of an astronaut building a colored scene utilizing non-representational and super-imposable painted transparent films to identify the most favorable impression.

Neuroendocrine and Immune Responses in Humans During and After Long-term Stay at ISS (Immuno) will provide an understanding for the development of pharmacological tools to countermeasure unwanted immunological side effects during long-duration missions.

Motion Perception: Vestibular Adaptation to G-Transitions (MOP) is to gain insight in the process of vestibular adaptation to a gravity transition.

LBP-Muscle: Study of Lower Back Pain in Astronauts during Spaceflight will study the development of lower back pain in crew members during spaceflight and determine if there is a relationship to muscle atrophy.

Experiments Delivered to the International Space Station on STS-120

Investigating the Structure of Paramagnetic Aggregates from Colloidal Emulsions (InSPACE)-2 will study the fundamental behavior of magnetic colloidal fluids under the influence of various magnetic fields. This technology has promise to improve the ability to design structures, such as bridges and buildings, and to better withstand earthquake damage.

EUROPEAN EXPERIMENT PROGRAM

In addition to his tasks as an STS-120 mission specialist, European Space Agency (ESA) astronaut Paolo Nespoli will undertake the European Esperia mission, during which he will carry out a number of experiments on behalf of the European science community. Two of these experiments (Chromosome-2 and Neocytolysis) are sponsored by ESA. The other three experiments (HPA, FRTL-5 and SPORE) are sponsored by the Italian Space Agency, or ASI. Chromosome-2, Neocytolysis and HPA are experiments in the field of human physiology. FRTL-5 and SPORE are biology experiments. Nespoli also will be conducting Educational Activities (see ARISS) coordinated by both ESA and ASI.

Chromosome-2

During spaceflights, crew members are exposed to different types of ionizing radiation. To assess the genetic impact of these radiations, this experiment will study chromosome changes and sensitivity to radiation in lymphocytes (white blood cells) of ISS crew members. The Chromosome-2 experiment is planned to be carried out using eight subjects: four from short-duration flights and four expedition crew members.

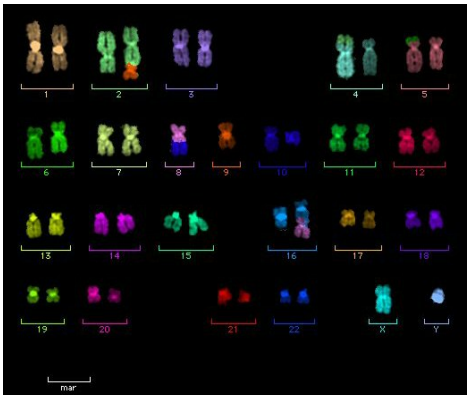

Multi-fluorescent chromosome map of a cell exposed to cosmic radiation. (Image: M. Durante)

Science Team:

C. Johannes, M. Horstmann
Universität Duisburg-Essen
Essen, Germany

Neocytolysis

This experiment covers the effects of weightlessness on the hemopoietic system, which is the system of the body responsible for the formation of blood cells. The experiment will study a process called neocytolysis, the selective destruction of young red blood cells. The experimentwill analyze the physical and functional characteristics of young red blood cells taken from astronaut blood samples before and after spaceflight. It will be carried out with three subjects from short-term missions.

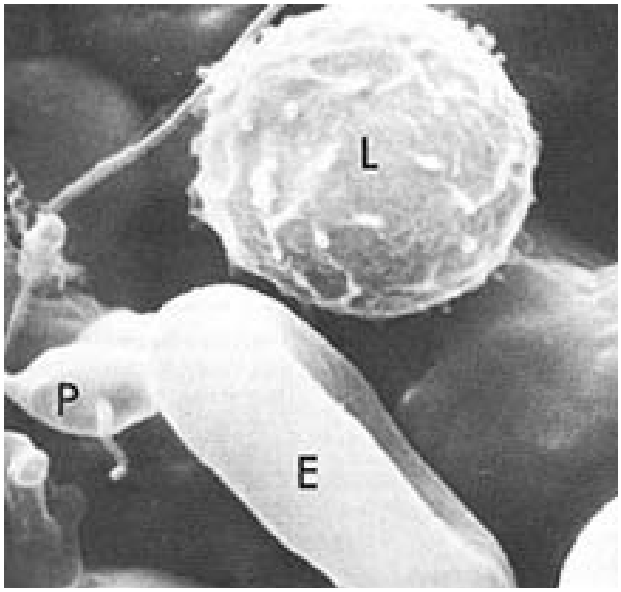

Constituents of blood. E is an erythrocyte or red blood cell, L is a lymphocyte or white blood cell and P is a blood platelet. (Image: NASA)

Science Team:

A. Risso, G. Antonutto,
University of Udine, Udine, Italy

M. Cosulich, G. Minetti.
University of Pavia, Pavia, Italy

Hand Posture Analyzer (HPA)

This experiment has two goals: understanding the ability of the human brain to mentally represent the presence or absence of gravity effects on object motion, and studying the effects of weightlessness on movement. The Hand Posture Analyzer, was launched to the ISS on Progress flight 12P in August 2003, and used during Expeditions 7 and 8. The preliminary version of the same hardware was used on board the station during the "Marco Polo" mission with ESA astronaut Roberto Vittori in 2002. During his second mission in April 2005, astronaut Roberto Vittori again performed the HPA experiment.

Astronaut Roberto Vittori uses the CHIRO device during the "Marco Polo" mission (April 2002) (Image: V. Zolesi)

The HPA hardware consists of two dynamometers for measuring pinch and grip force and a gloved instrumentation device worn by the astronaut, which is attached to an electronics box. The astronaut will carry out three different experiment protocols: IMAGINE, during which the astronaut simulates throwing an imaginary ball up against the ceiling and catching it on the way down using the instrumented glove and electronics box; MAIS, during which the subject uses the same hardware and carries

out a protocol of reaching out, gripping and releasing different sized cylindrical objects; and CHIRO, which measures the maximum force exerted on the hand and pinch grip dynamometers by the astronaut.

Science Team:

F. Lacquaniti,
Università Tor Vergata, Rome, Italy

M. Zago, W. Miller, S. Gravano,
IRCCS Santa Lucia Foundation, Italy

P. Pastacaldi,
Azienda Ospedaliera Pisana, Pisa, Italy.

F. Posteraro,
Ospedale della Versilia, Lido di Camaiore (LU), Italy

V. Zolesi,
Kayser Italia, Livorno, Italy

Fischer Rat Thyroid Low serum 5% (FRTL5)

This experiment is aimed at assessing the effects of the space environment (weightlessness and radiation) on normal in vitro cultures of so-called FRTL5 rat thyroid cells. This experiment will use cells already exposed to the space environment during the FRTL-5 experiment on the 10-day Eneide mission with ESA astronaut Roberto Vittori in April 2005.

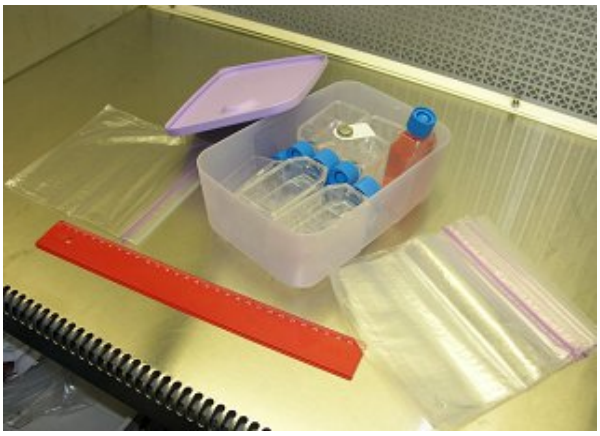

FTRL5 equipment (Image: S. Ambesi)

The FRTL5 cells will be used in a proliferative state, which is affected much more by the space environment. The cells will be sealed in sterile culture flasks and kept under controlled conditions. One of the reasons for choosing these specific thyroid cells is the relevance they have to human physiology and medicine. Thyroid tissue is an ideal target for space radiation research.

The cells will be tested after returning to Earth for DNA modifications because of radiation and magnetic fields, and the effect of weightlessness on cell behavior. This kind of research helps to improve our knowledge of the effect of the space environment on the human body, especially with longer-term missions planned in the future (e.g., Mars).

Science Team:

F. Curcio, University of Udine, Italy

S. Ambesi, University of Udine, Italy

SPORE

The SPORE educational experiment's purpose is the study of PY17 bacterial spores' response to exposure to weightlessness and ionizing radiations, which are characteristic of the ISS environment. The experiment was conceived by high school students.

PY17 is the name given to a culture of the wild type stock spores of Bacillus subtilis. Ninety-six sealed cuvettes containing the spores will be equally split into three experiment containers. The experiment will last the duration of the mission. The bacterial spores are harmless to humans.

Cuvette used in SPORE experiment

Once retrieved, the spores will be compared to control samples that have followed the same experiment protocol on the ground. The comparison will help determine the effects of residual gravity variation and exposure to ionizing radiations on the spores' survival and development.

Science Team:

M. Mezzacappa,
Liceo Scientifico "Majorana" di Isernia, Italy

A. Iscra,
Istituto di Istruzione Superiore "Vittorio Emanuele II – Ruffini" di Genova, Italy

L.i Naclerio,
Università del Molise, Italy

ARISS (and additional education activities)

ARISS stands for Amateur Radio on the ISS. It is an international association of national amateur radio societies from the countries participating in the ISS program. The association forms a valuable part of ESA's education program, helping to stimulate children and young people's interest in science, technical-based subjects and space in general. The goal is to stimulate interest for future careers in these areas.

During the mission, Paolo Nespoli will be involved in two live amateur radio contacts from the ISS. He will answer questions from school children and university students at the IIS Deambrosis-Natta school in Sestri Levante, Genoa, Italy and the University of L'Aquila respectively.

A web-chat with Nespoli before or after the flight is also foreseen, as well as the distribution of education material about the mission to youngsters in Italy. The education-based activities are being coordinated by ESA and ASI.

Competition winner at ESA's ESRIN facility in Frascati, Italy asks a question of ESA astronaut Roberto Vittori on the ISS. 21 April 2005. (Image: ESA)

Project Team

G. Bertels, Brussels, Belgium
ESA-HME Education Office,
ESTEC, Noordwijk, The Netherlands

This page intentionally left blank.

EXTERNAL TANK ET-120 (ET-120)

ET-120 was first shipped from the Michoud Assembly Facility Dec. 31, 2004. It was the first tank slated to fly on the space shuttle's return to flight, which was Discovery's STS-114 mission in July 2005. ET-120 also was the first tank to be modified with the safety improvements mandated by the Columbia Accident Investigation Board. Improvements included the forward bipod, liquid hydrogen tank/intertank flange and liquid oxygen feedline bellows.

Lockheed Martin technician Dennis Silbernagel torques bolt fasteners on the redesigned –Y bipod fitting on ET-120 at NASA's Michoud Assembly Facility in New Orleans in November 2004. The bipod redesign was one of the Return to Flight changes to the external tank to minimize potential debris by eliminating the large insulating foam covering the bipod area in favor of electric heaters.

ET-120 was fueled twice at the Kennedy Space Center, Fla., in preparation for launch of STS-114. The resulting Thermal Protection System (foam) conditions were reported and documented. ET-120 eventually was replaced by another tank before the launch of STS-114.

ET-120 returned to the Michoud Assembly Facility in New Orleans on Oct. 18, 2005, for TPS modifications and was used as a dissection test article during an STS-114 foam loss investigation. Foam loss events on the Protuberance Air Load (PAL) and Ice/Frost ramps during STS-114 required dissections to be performed on ET-120 to further understand foam loss mechanisms.

Dissections also revealed TPS cracking at the liquid hydrogen PAL ramp and liquid hydrogen Ice/Frost ramp locations. Other TPS applications considered "at risk" to the overall Space Shuttle Program for thermal cracking also were removed from ET-120 and evaluated. All other dissected TPS applications were returned to flight-ready configuration. In addition to the TPS attention ET-120 received, other systems, including the structure, electrical, propulsion/mechanical subsystems, went through a verification reassessment process.

Lance Mercier, Lockheed Martin technician, measures foam prior to removing it from ET-120's liquid hydrogen tank protuberance airloads (PAL) ramp in November 2005. Following STS-114, studies and testing determined that both the liquid oxygen and the liquid hydrogen PAL ramps could be removed from the external tank to minimize potential foam loss. The two PAL ramps, made entirely of foam, weighed almost 37 pounds. ET-119 was the first tank to fly without PAL ramps.

A recovery plan was presented and accepted by the program, and the External Tank Project initiated a recovery/repair plan effort to return the tank to flight status. The goal for the tank's TPS repairs was to keep debris risk at the same level or better than the existing configuration. ET-120 repair work began in October 2006 to support the August 2007 launch on need mission for shuttle Endeavour's STS-118 mission. ET-120 is the primary tank for Discovery's STS-120 mission.

ET-120 was shipped by barge from the Michoud Assembly Facility on July 24, 2007 and arrived at the Kennedy Space Center, Fla., on July 29.

ET-120 – BEFORE AND AFTER: HOW THE ET-120 TANK FOR STS-120 IS DIFFERENT FROM ET-120 FOR STS-114

LH_2 Ice/Frost Ramp modifications have been made at 14 locations (stations1151-1980). LO_2 (Liquid Oxygen) Ice/Frost Ramps modifications have been made at four locations (stations XT, 718, 760, 794 and 828). A complete redesign is planned and will fly next year on ET-128 during the STS-124 mission.

LO_2 Feedline Brackets – Four feedline brackets (stations 1129, 1623, 1377, and 1871) on ET-120 were modified with a different foam configuration as an interim measure before a new titanium bracket design flies on ET-128/STS-124. BX foam and Super-Lightweight Ablator (SLA) were removed from the upper portion of the four brackets, which were resprayed only with BX foam and restored to near the original mold line. Bracket BX foam is about one-inch thick and the underlying SLA is about one-half-inch thick, but the SLA is denser, or heavier than the BX foam. Approximately five inches of TPS is being removed, which eliminates about .12 pounds of TPS mass for each bracket. Less foam on the brackets is acceptable for the shuttle's ascent. It is now known that SLA is not required on the brackets.

LO_2 and LH_2 (Liquid Hydrogen) PAL Ramps were removed.

Bipod Harness Modifications – Wire harness sealing/bonding, flown as a return-to-flight modification on ET-119 during the STS-121 mission was performed to preclude a debris event similar to the one observed on STS-114. Voids within cabling and underneath the harnesses have the potential to cause cryoingestion and cryopumping failure. A process was developed to seal cables and bond harnesses with minimal defects.

A United Space Alliance external tank technician maps out the cutting area of the LO_2 feed line bracket where BX265 foam insulation and super lightweight ablator, or SLA, cork insulation is to be removed. The BX265 foam insulation was later reapplied without the SLA.

Intertank Acreage Machining/Venting – The area of vented intertank TPS foam was increased to reduce the potential for foam loss because of "popcorning," which results from air bubbles becoming trapped in foam, then flaking off and falling away from heating and expansion during launch.

Two ET Camera Antennas Replaced – Corrosion on antennas observed during visual inspection were believed to have been caused by the tank's extended stay at the launch pad or exposure to moisture at the Michoud Assembly Facility. Two LO_2 Feedline Camera System antennas were removed and replaced with new nickel-plated antennas. TPS closeout material was reapplied using the existing verified and validated procedure.

The Space Shuttle Program remains committed to understanding external tank foam in order to more accurately assess potential risks and make improvements to the tank. A number of improvements were made prior to STS-114 and more were made before STS-121. While external tank foam loss never can be completely eliminated, the program continues to make tank improvements to minimize foam and ice loss by looking at areas where debris may be shed, prioritizing them and methodically eliminating them one at a time.

The super lightweight ablator, or SLA, cork insulation has been removed from the external tank and a United Space Alliance external tank technician sands off the residue from the LO_2 feed line bracket. The BX265 foam insulation was later reapplied without the SLA.

SHUTTLE REFERENCE DATA

SHUTTLE ABORT MODES

RSLS Aborts

These occur when the on-board shuttle computers detect a problem and command a halt in the launch sequence after taking over from the ground launch sequencer and before solid rocket booster ignition.

Ascent Aborts

Selection of an ascent abort mode may become necessary if there is a failure that affects vehicle performance, such as the failure of a space shuttle main engine or an orbital maneuvering system engine. Other failures requiring early termination of a flight, such as a cabin leak, might also require the selection of an abort mode. There are two basic types of ascent abort modes for space shuttle missions: intact aborts and contingency aborts. Intact aborts are designed to provide a safe return of the orbiter to a planned landing site. Contingency aborts are designed to permit flight crew survival following more severe failures when an intact abort is not possible. A contingency abort would generally result in a ditch operation.

Intact Aborts

There are four types of intact aborts: abort to orbit (ATO), abort once around (AOA), trans-oceanic abort landing (TAL) and return to launch site (RTLS).

Return to Launch Site

The RTLS abort mode is designed to allow the return of the orbiter, crew and payload to the launch site, Kennedy Space Center, approximately 25 minutes after liftoff.

The RTLS profile is designed to accommodate the loss of thrust from one space shuttle main engine between liftoff and approximately four minutes 20 seconds, at which time not enough main propulsion system propellant remains to return to the launch site. An RTLS can be considered to consist of three stages — a powered stage, during which the space shuttle main engines are still thrusting; an external tank separation phase; and the glide phase, during which the orbiter glides to a landing at the Kennedy Space Center. The powered RTLS phase begins with the crew selection of the RTLS abort, after solid rocket booster separation. The crew selects the abort mode by positioning the abort rotary switch to RTLS and depressing the abort push button. The time at which the RTLS is selected depends on the reason for the abort. For example, a three-engine RTLS is selected at the last moment, about 3 minutes, 34 seconds into the mission; whereas an RTLS chosen due to an engine out at liftoff is selected at the earliest time, about 2 minutes, 20 seconds into the mission (after solid rocket booster separation).

After RTLS is selected, the vehicle continues downrange to dissipate excess main propulsion system propellant. The goal is to leave only enough main propulsion system propellant to be able to turn the vehicle around, fly back toward the Kennedy Space Center and achieve the proper main engine cutoff conditions so the vehicle can glide to the Kennedy Space Center after external tank separation. During the downrange phase, a pitch-around maneuver is

initiated (the time depends in part on the time of a space shuttle main engine failure) to orient the orbiter/external tank configuration to a heads-up attitude, pointing toward the launch site. At this time, the vehicle is still moving away from the launch site, but the space shuttle main engines are now thrusting to null the downrange velocity. In addition, excess orbital maneuvering system and reaction control system propellants are dumped by continuous orbital maneuvering system and reaction control system engine thrustings to improve the orbiter weight and center of gravity for the glide phase and landing.

The vehicle will reach the desired main engine cutoff point with less than 2 percent excess propellant remaining in the external tank. At main engine cutoff minus 20 seconds, a pitch down maneuver (called powered pitch-down) takes the mated vehicle to the required external tank separation attitude and pitch rate. After main engine cutoff has been commanded, the external tank separation sequence begins, including a reaction control system maneuver that ensures that the orbiter does not recontact the external tank and that the orbiter has achieved the necessary pitch attitude to begin the glide phase of the RTLS.

After the reaction control system maneuver has been completed, the glide phase of the RTLS begins. From then on, the RTLS is handled similarly to a normal entry.

Transoceanic Abort Landing

The TAL abort mode was developed to improve the options available when a space shuttle main engine fails after the last RTLS opportunity but before the first time that an AOA can be accomplished with only two space shuttle main engines or when a major orbiter system failure, for example, a large cabin pressure leak or cooling system failure, occurs after the last RTLS opportunity, making it imperative to land as quickly as possible.

In a TAL abort, the vehicle continues on a ballistic trajectory across the Atlantic Ocean to land at a predetermined runway. Landing occurs about 45 minutes after launch. The landing site is selected near the normal ascent ground track of the orbiter to make the most efficient use of space shuttle main engine propellant. The landing site also must have the necessary runway length, weather conditions and U.S. State Department approval. The three landing sites that have been identified for a launch are Zaragoza, Spain; Moron, Spain; and Istres, France.

To select the TAL abort mode, the crew must place the abort rotary switch in the TAL/AOA position and depress the abort push button before main engine cutoff (Depressing it after main engine cutoff selects the AOA abort mode). The TAL abort mode begins sending commands to steer the vehicle toward the plane of the landing site. It also rolls the vehicle heads up before main engine cutoff and sends commands to begin an orbital maneuvering system propellant dump (by burning the propellants through the orbital maneuvering system engines and the reaction control system engines). This dump is necessary to increase vehicle performance (by decreasing weight) to place the center of gravity in the proper place for vehicle control and to decrease the vehicle's landing weight. TAL is handled like a normal entry.

Abort to Orbit

An ATO is an abort mode used to boost the orbiter to a safe orbital altitude when perform-

ance has been lost and it is impossible to reach the planned orbital altitude. If a space shuttle main engine fails in a region that results in a main engine cutoff under speed, the Mission Control Center will determine that an abort mode is necessary and will inform the crew. The orbital maneuvering system engines would be used to place the orbiter in a circular orbit.

Abort Once Around

The AOA abort mode is used in cases in which vehicle performance has been lost to such an extent that either it is impossible to achieve a viable orbit or not enough orbital maneuvering system propellant is available to accomplish the orbital maneuvering system thrusting maneuver to place the orbiter on orbit and the deorbit thrusting maneuver. In addition, an AOA is used in cases in which a major systems problem (cabin leak, loss of cooling) makes it necessary to land quickly. In the AOA abort mode, one orbital maneuvering system thrusting sequence is made to adjust the post-main engine cutoff orbit so a second orbital maneuvering system thrusting sequence will result in the vehicle deorbiting and landing at the AOA landing site (White Sands, N.M.; Edwards Air Force Base, Calif.; or the Kennedy Space Center, Fla). Thus, an AOA results in the orbiter circling the Earth once and landing about 90 minutes after liftoff.

After the deorbit thrusting sequence has been executed, the flight crew flies to a landing at the planned site much as it would for a nominal entry.

Contingency Aborts

Contingency aborts are caused by loss of more than one main engine or failures in other systems. Loss of one main engine while another is stuck at a low thrust setting also may necessitate a contingency abort. Such an abort would maintain orbiter integrity for in-flight crew escape if a landing cannot be achieved at a suitable landing field.

Contingency aborts due to system failures other than those involving the main engines would normally result in an intact recovery of vehicle and crew. Loss of more than one main engine may, depending on engine failure times, result in a safe runway landing. However, in most three-engine-out cases during ascent, the orbiter would have to be ditched. The inflight crew escape system would be used before ditching the orbiter.

Abort Decisions

There is a definite order of preference for the various abort modes. The type of failure and the time of the failure determine which type of abort is selected. In cases where performance loss is the only factor, the preferred modes are ATO, AOA, TAL and RTLS, in that order. The mode chosen is the highest one that can be completed with the remaining vehicle performance.

In the case of some support system failures, such as cabin leaks or vehicle cooling problems, the preferred mode might be the one that will end the mission most quickly. In these cases, TAL or RTLS might be preferable to AOA or ATO. A contingency abort is never chosen if another abort option exists.

Mission Control Houston is prime for calling these aborts because it has a more precise knowledge of the orbiter's position than the crew can obtain from on-board systems. Before main engine cutoff, Mission Control makes periodic calls to the crew to tell them which abort mode is (or is not) available. If ground communications are lost, the flight crew has on-board methods, such as cue cards, dedicated displays and display information, to determine

the abort region. Which abort mode is selected depends on the cause and timing of the failure causing the abort and which mode is safest or improves mission success. If the problem is a space shuttle main engine failure, the flight crew and Mission Control Center select the best option available at the time a main engine fails.

If the problem is a system failure that jeopardizes the vehicle, the fastest abort mode that results in the earliest vehicle landing is chosen. RTLS and TAL are the quickest options (35 minutes), whereas an AOA requires about 90 minutes. Which of these is selected depends on the time of the failure with three good space shuttle main engines.

The flight crew selects the abort mode by positioning an abort mode switch and depressing an abort push button.

SHUTTLE ABORT HISTORY

RSLS Abort History

(STS-41 D) June 26, 1984

The countdown for the second launch attempt for Discovery's maiden flight ended at T-4 seconds when the orbiter's computers detected a sluggish valve in main engine No. 3. The main engine was replaced and Discovery was finally launched on Aug. 30, 1984.

(STS-51 F) July 12, 1985

The countdown for Challenger's launch was halted at T-3 seconds when on-board computers detected a problem with a coolant valve on main engine No. 2. The valve was replaced and Challenger was launched on July 29, 1985.

(STS-55) March 22, 1993

The countdown for Columbia's launch was halted by on-board computers at T-3 seconds following a problem with purge pressure readings in the oxidizer preburner on main engine No. 2. Columbia's three main engines were replaced on the launch pad, and the flight was rescheduled behind Discovery's launch on STS-56. Columbia finally launched on April 26, 1993.

(STS-51) Aug. 12, 1993

The countdown for Discovery's third launch attempt ended at the T-3 second mark when onboard computers detected the failure of one of four sensors in main engine No. 2 which monitor the flow of hydrogen fuel to the engine. All of Discovery's main engines were ordered replaced on the launch pad, delaying the shuttle's fourth launch attempt until Sept. 12, 1993.

(STS-68) Aug. 18, 1994

The countdown for Endeavour's first launch attempt ended 1.9 seconds before liftoff when on-board computers detected higher than acceptable readings in one channel of a sensor monitoring the discharge temperature of the high pressure oxidizer turbopump in main engine No. 3. A test firing of the engine at the Stennis Space Center in Mississippi on September 2nd confirmed that a slight drift in a fuel flow meter in the engine caused a slight increase in the turbopump's temperature. The test firing also confirmed a slightly slower start for main engine No. 3 during the pad abort, which could have contributed to the higher temperatures. After Endeavour was brought back to the Vehicle Assembly Building to be outfitted with three replacement engines, NASA managers set Oct. 2 as the date for Endeavour's second launch attempt.

Abort to Orbit History

(STS-51 F) July 29, 1985

After an RSLS abort on July 12, 1985, Challenger was launched on July 29, 1985. Five minutes and 45 seconds after launch, a sensor problem resulted in the shutdown of center engine No. 1, resulting in a safe "abort to orbit" and successful completion of the mission.

SPACE SHUTTLE MAIN ENGINES

Developed in the 1970s by NASA's Marshall Space Flight Center in Huntsville, Ala., the space shuttle main engine is the most advanced liquid-fueled rocket engine ever built. Every space shuttle main engine is tested and proven flight-worthy at NASA's Stennis Space Center in south Mississippi, before installation on an orbiter. Its main features include variable thrust, high performance reusability, high redundancy and a fully integrated engine controller.

The shuttle's three main engines are mounted on the orbiter aft fuselage in a triangular pattern. Spaced so that they are movable during launch, the engines are used — in conjunction with the solid rocket boosters — to steer the shuttle vehicle.

Each of these powerful main engines is 14 feet (4.2 meters) long, weighs about 7,000 pounds (3,150 kilograms) and is 7.5 feet (2.25 meters) in diameter at the end of its nozzle.

The engines operate for about 8-1/2 minutes during liftoff and ascent — burning more than 500,000 gallons (1.9 million liters) of super-cold liquid hydrogen and liquid oxygen propellants stored in the huge external tank attached to the underside of the shuttle. The engines shut down just before the shuttle, traveling at about 17,000 mph (28,000 kilometers per hour), reaches orbit.

The main engine operates at greater temperature extremes than any mechanical system in common use today. The fuel, liquefied hydrogen at -423 degrees Fahrenheit (-253 degrees Celsius), is the second coldest liquid on Earth. When it and the liquid oxygen are combusted, the temperature in the main combustion chamber is 6,000 degrees Fahrenheit (3,316 degrees Celsius), hotter than the boiling point of iron.

The main engines use a staged combustion cycle so that all propellants entering the engines are used to produce thrust or power — more efficiently than any previous rocket engine. In a staged combustion cycle, propellants are first burned partially at high pressure and relatively low temperature — then burned completely at high temperature and pressure in the main combustion chamber. The rapid mixing of the propellants under these conditions is so complete that 99 percent of the fuel is burned.

At normal operating level, each engine generates 490,847 pounds of thrust (measured in a vacuum). Full power is 512,900 pounds of thrust; minimum power is 316,100 pounds of thrust.

The engine can be throttled by varying the output of the pre-burners, thus varying the speed of the high-pressure turbopumps and, therefore, the flow of the propellant.

At about 26 seconds into launch, the main engines are throttled down to 316,000 pounds of thrust to keep the dynamic pressure on the vehicle below a specified level — about 580 pounds per square foot or max q. Then, the engines are throttled back up to normal operating level at about 60 seconds. This reduces stress on the vehicle. The main engines

are throttled down again at about seven minutes, 40 seconds into the mission to maintain three g's — three times the Earth's gravitational pull — again reducing stress on the crew and the vehicle. This acceleration level is about one-third the acceleration experienced on previous crewed space vehicles.

About 10 seconds before main engine cutoff or MECO, the cutoff sequence begins; about three seconds later the main engines are commanded to begin throttling at 10 percent thrust per second to 65 percent thrust. This is held for about 6.7 seconds, and the engines are shut down.

The engine performance has the highest thrust for its weight of any engine yet developed. In fact, one space shuttle main engine generates sufficient thrust to maintain the flight of 2-1/2 747 airplanes.

The space shuttle main engine is also the first rocket engine to use a built-in electronic digital controller, or computer. The controller will accept commands from the orbiter for engine start, change in throttle, shutdown, and monitor engine operation. In the event of a failure, the controller automatically corrects the problem or safely shuts down the engine.

NASA continues to increase the reliability and safety of shuttle flights through a series of enhancements to the space shuttle main engines. The engines were modified in 1988, 1995, 1998, and 2001. Modifications include new high-pressure fuel and oxidizer turbopumps that reduce maintenance and operating costs of the engine, a two-duct powerhead that reduces pressure and turbulence in the engine, and a single-coil heat exchanger that lowers the number of post flight inspections required. Another modification incorporates a large-throat main combustion chamber that improves the engine's reliability by reducing pressure and temperature in the chamber.

After the orbiter lands, the engines are removed and returned to a processing facility at Kennedy Space Center, Fla., where they are rechecked and readied for the next flight. Some components are returned to the main engine's prime contractor, Pratt & Whitney RocketDyne, West Palm Beach, Fla., for regular maintenance. The main engines are designed to operate for 7.5 accumulated hours.

SPACE SHUTTLE SOLID ROCKET BOOSTERS

The two SRBs provide the main thrust to lift the space shuttle off the pad and up to an altitude of about 150,000 feet, or 24 nautical miles (28 statute miles). In addition, the two SRBs carry the entire weight of the external tank and orbiter and transmit the weight load through their structure to the mobile launcher platform.

Each booster has a thrust (sea level) of about 3,300,000 pounds at launch. They are ignited after the three space shuttle main engines' thrust level is verified. The two SRBs provide 71.4 percent of the thrust at liftoff and during first-stage ascent. Seventy-five seconds after SRB separation, SRB apogee occurs at an altitude of about 220,000 feet, or 35 nautical miles (40 statute miles). SRB impact occurs in the ocean about 122 nautical miles (140 statute miles) downrange.

The SRBs are the largest solid-propellant motors ever flown and the first designed for reuse. Each is 149.16 feet long and 12.17 feet in diameter. Each SRB weighs about 1,300,000 pounds at launch. The propellant for each solid rocket motor weighs about 1,100,000 pounds.

The inert weight of each SRB is about 192,000 pounds.

Primary elements of each booster are the motor (including case, propellant, igniter and nozzle), structure, separation systems, operational flight instrumentation, recovery avionics, pyrotechnics, deceleration system, thrust vector control system and range safety destruct system.

Each booster is attached to the external tank at the SRB's aft frame by two lateral sway braces and a diagonal attachment. The forward end of each SRB is attached to the external tank at the forward end of the SRB's forward skirt. On the launch pad, each booster also is attached to the mobile launcher platform at the aft skirt by four bolts and nuts that are severed by small explosives at liftoff.

During the downtime following the Challenger accident, detailed structural analyses were performed on critical structural elements of the SRB. Analyses were primarily focused in areas where anomalies had been noted during post-flight inspection of recovered hardware.

One of the areas was the attach ring where the SRBs are connected to the external tank. Areas of distress were noted in some of the fasteners where the ring attaches to the SRB motor case. This situation was attributed to the high loads encountered during water impact. To correct the situation and ensure higher strength margins during ascent, the attach ring was redesigned to encircle the motor case completely (360 degrees).

Previously, the attach ring formed a C and encircled the motor case 270 degrees.

Additionally, special structural tests were done on the aft skirt. During this test program, an anomaly occurred in a critical weld between the hold-down post and skin of the skirt. A redesign was implemented to add reinforcement brackets and fittings in the aft ring of the skirt.

These two modifications added about 450 pounds to the weight of each SRB.

The propellant mixture in each SRB motor consists of an ammonium perchlorate (oxidizer, 69.6 percent by weight), aluminum (fuel, 16 percent), iron oxide (a catalyst, 0.4 percent), a polymer (a binder that holds the mixture together, 12.04 percent), and an epoxy curing agent (1.96 percent). The propellant is an 11-point star-shaped perforation in the forward motor segment and a double-truncated-cone perforation in each of the aft segments and aft closure. This configuration provides high thrust at ignition and then reduces the thrust by about a third 50 seconds after liftoff to prevent overstressing the vehicle during maximum dynamic pressure.

The SRBs are used as matched pairs and each is made up of four solid rocket motor segments. The pairs are matched by loading each of the four motor segments in pairs from the same batches of propellant ingredients to minimize any thrust imbalance. The segmented-casing design assures maximum flexibility in fabrication and ease of transportation and handling. Each segment is shipped to the launch site on a heavy-duty rail car with a specially built cover.

The nozzle expansion ratio of each booster beginning with the STS-8 mission is 7-to-79. The nozzle is gimbaled for thrust vector (direction) control. Each SRB has its own redundant auxiliary power units and hydraulic pumps. The all-axis gimbaling capability is 8 degrees. Each nozzle has a carbon cloth liner that erodes and chars during firing. The nozzle is a convergent-divergent, movable design in which an

aft pivot-point flexible bearing is the gimbal mechanism.

The cone-shaped aft skirt reacts the aft loads between the SRB and the mobile launcher platform. The four aft separation motors are mounted on the skirt. The aft section contains avionics, a thrust vector control system that consists of two auxiliary power units and hydraulic pumps, hydraulic systems and a nozzle extension jettison system.

The forward section of each booster contains avionics, a sequencer, forward separation motors, a nose cone separation system, drogue and main parachutes, a recovery beacon, a recovery light, a parachute camera on selected flights and a range safety system.

Each SRB has two integrated electronic assemblies, one forward and one aft. After burnout, the forward assembly initiates the release of the nose cap and frustum, a transition piece between the nose cone and solid rocket motor, and turns on the recovery aids. The aft assembly, mounted in the external tank/SRB attach ring, connects with the forward assembly and the orbiter avionics systems for SRB ignition commands and nozzle thrust vector control. Each integrated electronic assembly has a multiplexer/demultiplexer, which sends or receives more than one message, signal or unit of information on a single communication channel.

Eight booster separation motors (four in the nose frustum and four in the aft skirt) of each SRB thrust for 1.02 seconds at SRB separation from the external tank. Each solid rocket separation motor is 31.1 inches long and 12.8 inches in diameter.

Location aids are provided for each SRB, frustum/drogue chutes and main parachutes. These include a transmitter, antenna, strobe/converter, battery and salt-water switch electronics. The location aids are designed for a minimum operating life of 72 hours and when refurbished are considered usable up to 20 times. The flashing light is an exception. It has an operating life of 280 hours. The battery is used only once.

The SRB nose caps and nozzle extensions are not recovered.

The recovery crew retrieves the SRBs, frustum/drogue chutes, and main parachutes. The nozzles are plugged, the solid rocket motors are dewatered, and the SRBs are towed back to the launch site. Each booster is removed from the water, and its components are disassembled and washed with fresh and deionized water to limit salt-water corrosion. The motor segments, igniter and nozzle are shipped back to ATK Thiokol for refurbishment.

Each SRB incorporates a range safety system that includes a battery power source, receiver/decoder, antennas and ordnance.

Hold-Down Posts

Each solid rocket booster has four hold-down posts that fit into corresponding support posts on the mobile launcher platform. Hold-down bolts hold the SRB and launcher platform posts together. Each bolt has a nut at each end, but only the top nut is frangible. The top nut contains two NASA standard detonators (NSDs), which are ignited at solid rocket motor ignition commands.

When the two NSDs are ignited at each hold-down, the hold-down bolt travels downward because of the release of tension in the bolt (pretensioned before launch), NSD gas pressure and gravity. The bolt is stopped by the stud

deceleration stand, which contains sand. The SRB bolt is 28 inches long and 3.5 inches in diameter. The frangible nut is captured in a blast container.

The solid rocket motor ignition commands are issued by the orbiter's computers through the master events controllers to the hold-down pyrotechnic initiator controllers on the mobile launcher platform. They provide the ignition to the hold-down NSDs. The launch processing system monitors the SRB hold-down PICs for low voltage during the last 16 seconds before launch. PIC low voltage will initiate a launch hold.

SRB Ignition

SRB ignition can occur only when a manual lock pin from each SRB safe and arm device has been removed. The ground crew removes the pin during prelaunch activities. At T minus five minutes, the SRB safe and arm device is rotated to the arm position. The solid rocket motor ignition commands are issued when the three SSMEs are at or above 90 percent rated thrust, no SSME fail and/or SRB ignition PIC low voltage is indicated and there are no holds from the LPS.

The solid rocket motor ignition commands are sent by the orbiter computers through the MECs to the safe and arm device NSDs in each SRB. A PIC single-channel capacitor discharge device controls the firing of each pyrotechnic device. Three signals must be present simultaneously for the PIC to generate the pyro firing output. These signals — arm, fire 1 and fire 2 — originate in the orbiter general-purpose computers and are transmitted to the MECs. The MECs reformat them to 28-volt dc signals for the PICs. The arm signal charges the PIC capacitor to 40 volts dc (minimum of 20 volts dc).

The fire 2 commands cause the redundant NSDs to fire through a thin barrier seal down a flame tunnel. This ignites a pyro booster charge, which is retained in the safe and arm device behind a perforated plate. The booster charge ignites the propellant in the igniter initiator; and combustion products of this propellant ignite the solid rocket motor initiator, which fires down the length of the solid rocket motor igniting the solid rocket motor propellant.

The GPC launch sequence also controls certain critical main propulsion system valves and monitors the engine-ready indications from the SSMEs. The MPS start commands are issued by the on-board computers at T minus 6.6 seconds (staggered start — engine three, engine two, engine one — all about within 0.25 of a second), and the sequence monitors the thrust buildup of each engine. All three SSMEs must reach the required 90 percent thrust within three seconds; otherwise, an orderly shutdown is commanded and safing functions are initiated.

Normal thrust buildup to the required 90 percent thrust level will result in the SSMEs being commanded to the liftoff position at T minus three seconds as well as the fire 1 command being issued to arm the SRBs. At T minus three seconds, the vehicle base bending load modes are allowed to initialize (movement of 25.5 inches measured at the tip of the external tank, with movement towards the external tank).

At T minus zero, the two SRBs are ignited under command of the four on-board computers; separation of the four explosive bolts on each SRB is initiated (each bolt is

28 inches long and 3.5 inches in diameter); the two T-0 umbilicals (one on each side of the spacecraft) are retracted; the on-board master timing unit, event timer and mission event timers are started; the three SSMEs are at 100 percent; and the ground launch sequence is terminated.

The solid rocket motor thrust profile is tailored to reduce thrust during the maximum dynamic pressure region.

Electrical Power Distribution

Electrical power distribution in each SRB consists of orbiter-supplied main dc bus power to each SRB via SRB buses A, B and C. Orbiter main dc buses A, B and C supply main dc bus power to corresponding SRB buses A, B and C. In addition, orbiter main dc bus C supplies backup power to SRB buses A and B, and orbiter bus B supplies backup power to SRB bus C. This electrical power distribution arrangement allows all SRB buses to remain powered in the event one orbiter main bus fails.

The nominal dc voltage is 28 volts dc, with an upper limit of 32 volts dc and a lower limit of 24 volts dc.

Hydraulic Power Units

There are two self-contained, independent HPUs on each SRB. Each HPU consists of an auxiliary power unit, fuel supply module, hydraulic pump, hydraulic reservoir and hydraulic fluid manifold assembly. The APUs are fueled by hydrazine and generate mechanical shaft power to a hydraulic pump that produces hydraulic pressure for the SRB hydraulic system. The two separate HPUs and two hydraulic systems are located on the aft end of each SRB between the SRB nozzle and aft skirt. The HPU components are mounted on the aft skirt between the rock and tilt actuators. The two systems operate from T minus 28 seconds until SRB separation from the orbiter and external tank. The two independent hydraulic systems are connected to the rock and tilt servoactuators.

The APU controller electronics are located in the SRB aft integrated electronic assemblies on the aft external tank attach rings.

The APUs and their fuel systems are isolated from each other. Each fuel supply module (tank) contains 22 pounds of hydrazine. The fuel tank is pressurized with gaseous nitrogen at 400 psi, which provides the force to expel (positive expulsion) the fuel from the tank to the fuel distribution line, maintaining a positive fuel supply to the APU throughout its operation.

The fuel isolation valve is opened at APU startup to allow fuel to flow to the APU fuel pump and control valves and then to the gas generator. The gas generator's catalytic action decomposes the fuel and creates a hot gas. It feeds the hot gas exhaust product to the APU two-stage gas turbine. Fuel flows primarily through the startup bypass line until the APU speed is such that the fuel pump outlet pressure is greater than the bypass line's. Then all the fuel is supplied to the fuel pump.

The APU turbine assembly provides mechanical power to the APU gearbox. The gearbox drives the APU fuel pump, hydraulic pump and lube oil pump. The APU lube oil pump lubricates the gearbox. The turbine exhaust of each APU flows over the exterior of the gas generator, cooling it, and is then directed overboard through an exhaust duct.

When the APU speed reaches 100 percent, the APU primary control valve closes, and the APU

speed is controlled by the APU controller electronics. If the primary control valve logic fails to the open state, the secondary control valve assumes control of the APU at 112 percent speed. Each HPU on an SRB is connected to both servoactuators on that SRB. One HPU serves as the primary hydraulic source for the servoactuator, and the other HPU serves as the secondary hydraulics for the servoactuator. Each servoactuator has a switching valve that allows the secondary hydraulics to power the actuator if the primary hydraulic pressure drops below 2,050 psi. A switch contact on the switching valve will close when the valve is in the secondary position. When the valve is closed, a signal is sent to the APU controller that inhibits the 100 percent APU speed control logic and enables the 112 percent APU speed control logic. The 100 percent APU speed enables one APU/HPU to supply sufficient operating hydraulic pressure to both servoactuators of that SRB.

The APU 100 percent speed corresponds to 72,000 rpm, 110 percent to 79,200 rpm, and 112 percent to 80,640 rpm.

The hydraulic pump speed is 3,600 rpm and supplies hydraulic pressure of 3,050, plus or minus 50, psi. A high-pressure relief valve provides overpressure protection to the hydraulic system and relieves at 3,750 psi.

The APUs/HPUs and hydraulic systems are reusable for 20 missions.

Thrust Vector Control

Each SRB has two hydraulic gimbal servoactuators: one for rock and one for tilt. The servoactuators provide the force and control to gimbal the nozzle for thrust vector control.

The space shuttle ascent thrust vector control portion of the flight control system directs the thrust of the three shuttle main engines and the two SRB nozzles to control shuttle attitude and trajectory during liftoff and ascent. Commands from the guidance system are transmitted to the ATVC drivers, which transmit signals proportional to the commands to each servoactuator of the main engines and SRBs. Four independent flight control system channels and four ATVC channels control six main engine and four SRB ATVC drivers, with each driver controlling one hydraulic port on each main and SRB servoactuator.

Each SRB servoactuator consists of four independent, two-stage servovalves that receive signals from the drivers. Each servovalve controls one power spool in each actuator, which positions an actuator ram and the nozzle to control the direction of thrust.

The four servovalves in each actuator provide a force-summed majority voting arrangement to position the power spool. With four identical commands to the four servovalves, the actuator force-sum action prevents a single erroneous command from affecting power ram motion. If the erroneous command persists for more than a predetermined time, differential pressure sensing activates a selector valve to isolate and remove the defective servovalve hydraulic pressure, permitting the remaining channels and servovalves to control the actuator ram spool.

Failure monitors are provided for each channel to indicate which channel has been bypassed. An isolation valve on each channel provides the capability of resetting a failed or bypassed channel.

Each actuator ram is equipped with transducers for position feedback to the thrust vector control system. Within each servoactuator ram is a

splashdown load relief assembly to cushion the nozzle at water splashdown and prevent damage to the nozzle flexible bearing.

SRB Rate Gyro Assemblies

Each SRB contains two RGAs, with each RGA containing one pitch and one yaw gyro. These provide an output proportional to angular rates about the pitch and yaw axes to the orbiter computers and guidance, navigation and control system during first-stage ascent flight in conjunction with the orbiter roll rate gyros until SRB separation. At SRB separation, a switchover is made from the SRB RGAs to the orbiter RGAs.

The SRB RGA rates pass through the orbiter flight aft multiplexers/demultiplexers to the orbiter GPCs. The RGA rates are then mid-value-selected in redundancy management to provide SRB pitch and yaw rates to the user software. The RGAs are designed for 20 missions.

SRB Separation

SRB separation is initiated when the three solid rocket motor chamber pressure transducers are processed in the redundancy management middle value select and the head-end chamber pressure of both SRBs is less than or equal to 50 psi. A backup cue is the time elapsed from booster ignition.

The separation sequence is initiated, commanding the thrust vector control actuators to the null position and putting the main propulsion system into a second-stage configuration (0.8 second from sequence initialization), which ensures the thrust of each SRB is less than 100,000 pounds. Orbiter yaw attitude is held for four seconds, and SRB thrust drops to less than 60,000 pounds.

The SRBs separate from the external tank within 30 milliseconds of the ordnance firing command.

The forward attachment point consists of a ball (SRB) and socket (ET) held together by one bolt. The bolt contains one NSD pressure cartridge at each end. The forward attachment point also carries the range safety system cross-strap wiring connecting each SRB RSS and the ET RSS with each other.

The aft attachment points consist of three separate struts: upper, diagonal and lower. Each strut contains one bolt with an NSD pressure cartridge at each end. The upper strut also carries the umbilical interface between its SRB and the external tank and on to the orbiter.

There are four booster separation motors on each end of each SRB. The BSMs separate the SRBs from the external tank. The solid rocket motors in each cluster of four are ignited by firing redundant NSD pressure cartridges into redundant confined detonating fuse manifolds.

The separation commands issued from the orbiter by the SRB separation sequence initiate the redundant NSD pressure cartridge in each bolt and ignite the BSMs to effect a clean separation.

SPACE SHUTTLE SUPER LIGHT WEIGHT TANK (SLWT)

The super lightweight external tank (SLWT) made its first shuttle flight June 2, 1998, on mission STS-91. The SLWT is 7,500 pounds lighter than the standard external tank. The lighter weight tank allows the shuttle to deliver International Space Station elements (such as the service module) into the proper orbit.

The SLWT is the same size as the previous design. But the liquid hydrogen tank and the liquid oxygen tank are made of aluminum lithium, a lighter, stronger material than the metal alloy used for the shuttle's current tank. The tank's structural design has also been improved, making it 30 percent stronger and 5 percent less dense.

The SLWT, like the standard tank, is manufactured at Michoud Assembly, near New Orleans, by Lockheed Martin.

The 154-foot-long external tank is the largest single component of the space shuttle. It stands taller than a 15-story building and has a diameter of about 27 feet. The external tank holds over 530,000 gallons of liquid hydrogen and liquid oxygen in two separate tanks. The hydrogen (fuel) and liquid oxygen (oxidizer) are used as propellants for the shuttle's three main engines.

This page intentionally left blank.

LAUNCH AND LANDING

LAUNCH

As with all previous space shuttle launches, Discovery has several options to abort its ascent if needed due to engine failures or other systems problems. Shuttle launch abort philosophy is intended to facilitate safe recovery of the flight crew and intact recovery of the orbiter and its payload.

Abort modes include:

ABORT-TO-ORBIT (ATO)

This mode is used if there's a partial loss of main engine thrust late enough to permit reaching a minimal 105 by 85 nautical mile orbit with the orbital maneuvering system engines. The engines boost the shuttle to a safe orbital altitude when it is impossible to reach the planned orbital altitude.

TRANSATLANTIC ABORT LANDING (TAL)

The loss of one or more main engines midway through powered flight would force a landing at either Zaragoza, Spain; Moron, Spain; or Istres, France. For launch to proceed, weather conditions must be acceptable at one of these TAL sites.

RETURN-TO-LAUNCH-SITE (RTLS)

If one or more engines shuts down early and there's not enough energy to reach Zaragoza, the shuttle would pitch around toward Kennedy until within gliding distance of the Shuttle Landing Facility. For launch to proceed, weather conditions must be forecast to be acceptable for a possible RTLS landing at KSC about 20 minutes after liftoff.

ABORT ONCE AROUND (AOA)

An AOA is selected if the vehicle cannot achieve a viable orbit or will not have enough propellant to perform a deorbit burn, but has enough energy to circle the Earth once and land about 90 minutes after liftoff.

LANDING

The primary landing site for Discovery on STS-120 is the Kennedy Space Center's Shuttle Landing Facility. Alternate landing sites that could be used if needed because of weather conditions or systems failures are at Edwards Air Force Base, Calif., and White Sands Space Harbor, N.M.

This page intentionally left blank.

ACRONYMS AND ABBREVIATIONS

AA	Antenna Assembly
AAA	Avionics Air Assembly
ABC	Audio Bus Coupler
AC	Assembly Complete
ACBM	Active Common Berthing Mechanism
ACO	Assembly and Checkout Officer
ACS	Atmosphere Control and Supply
ACSM	Attitude Control System Moding
ACU	Arm Computer Unit
ADO	Adaptation Data Overlay
ADSEP	Advanced Separation
ADVASC	Advanced Astroculture
ADVASC-GC	Advanced Astroculture—Growth Chamber
AEA	Antenna Electronics Assembly
AFD	Aft Flight Deck
AJIS	Alpha Joint Interface Structure
AKA	Active Keel Assembly
APAS	Androgynous Peripheral Attachment System
APCU	Assembly Power Converter Unit
APDS	Androgynous Peripheral Docking System
APFR	Articulating Portable Foot Restraint
APM	Attached Pressurized Module
APPCM	Arm Pitch Plane Change Mode
APS	Automated Payload Switch
AR	Atmosphere Revitalization
ARCU	American-to-Russian Converter Unit
ARIS	Active Rack Isolation System
ARS	Air Revitalization System
ASCR	Assured Safe Crew Return
ATA	Ammonia Tank Assembly
ATCS	Active Thermal Control System
ATU	Audio Terminal Unit
AUAI	Assemble Contingency System/UHF Audio Interface
AVU	Artificial Vision Unit
AVV	Accumulator Vent Valve
BA	Bearing Assembly
BBC	Bus Bolt Controller
BC	Bus Controller

BCDU	Battery Charge/Discharge Unit
BCU	Backup Controller Unit
BDU	Backup Drive Unit
BG	Beta Gimbal
BGA	Beta Gimbal Assembly
BGDTS	Beta Gimbal Deployment Transition Structure
BGHS	Beta Gimbal Housing Subassembly
BIT	Built-In Test
BITE	Built-In Test Equipment
BMRRM	Bearing Motor and Roll Ring Module
BONEMAC	Bone Marrow Macrophages in Space
BPSMU	Battery Powered Speaker Microphone Unit
BRS	Bottom Right Side
BSP	Baseband Signal Processor
BTS	Bolt Tight Switch
C&C	Command and Control
C&DH	Command and Data Handling
C&M	Control and Monitor
C&T	Communication and Tracking
C&W	Caution and Warning
C/A-code	Coarse/Acquisition-code
C/L	Crew Lock
CA	Control Attitude
CAS	Common Attach System
CBM	Common Berthing Mechanism
CBOSS	Cellular Biotechnology Operating Science System
CCAA	Common Cabin Air Assembly
CCASE	Commercial Cassette Experiment
CCD	Cursor Control Device
CCMS	Concentric Cable Management System
CCS	Communication and Control System
CCTV	Closed-Circuit Television
CDDT	Common Display Development Team
CDRA	Carbon Dioxide Removal Assembly
CDS	Command and Data Software
CETA	Crew and Equipment Translation Aid
CEU	Control Electronics Unit
CFA	Circular Fan Assembly
CGBA	Commercial Generic Bioprocessing Apparatus
CHeCS	Crew Health Care System
CHX	Condensing Heat Exchanger

CID	Circuit Interrupt Device
CIOB	Cargo Integration and Operations Branch
CLA	Camera and Light Assembly
CLPA	Camera Light and Pan/Tilt Assembly
CMG	Control Moment Gyroscope
CMG-TA	Control Moment Gyroscope-Thruster Assist
CO_2	Carbon Dioxide
COAS	Crew Optical Alignment Sight
COR	Communication Outage Recorder
COTS	Commercial-Off-The-Shelf
CP	Cold Plate
CPCG-H	Commercial Protein Crystal Growth-High
CR	Change Request
CRES	Corrosion Resistant Steel
CRIM	Commercial Refrigerator Incubator Module
CRIM-M	Commercial Refrigerator Incubator Module-Modified
CRPCM	Canadian Remote Power Controller Module
CSA	Computer Systems Architecture
CSA-CP	Compound Specific Analyzer-Combustion Products
CSCI	Computer Software Configuration Item
CSM	Cargo Systems Manual
CSS	Crew Support Station
CTB	Cargo Transfer Bag
CVIU	Common Video Interface Unit
CVT	Current Value Table
CVV	Carbon Dioxide Vent Valve
CWC	Contingency Water Collection
DAA	Docked Air-to-Air
DAG1	Docked A/G 1
DAIU	Docked Audio Interface Unit
DAP	Digital Autopilot
dc	direct current
DC	Docking Compartment
DCP	Display and Control Panel
DCSU	Direct Current Switching Unit
DDCU	DC-to-DC Converter Unit
DDCU-CP	DC-to-DC Converter Unit-Cold Plate
DDCU-E	External DDCU
DDCU-HP	DC-to-DC Converter Unit-Heat Pipe
DDCU-I	Internal DDCU
DFL	Data Format Load

DLA	Drive Locking Assembly
DMCU	Docking Mechanism Control Unit
DMS-R	Data Management System-Russian
dp/dt	delta pressure/delta time
DPA	Digital Preassembly
DPS	Data Processing System
DTO	Development Test Objective
DTV	Digital Television
E/L	Equipment Lock
E-Stop	Emergency Stop
EACP	EMU Audio Control Panel
EAIU	EMU Audio Interface Unit
EAS	Early Ammonia Servicer
EATCS	External Active Thermal Control Subsystem
ECLSS	Environmental Control and Life Support System
ECU	Electronics Control Unit
ED	Engagement Drive
EDDA	External Maneuvering Unit Don/Doff Assembly
EE	End Effector
EEATCS	Early External Active Thermal Control System
EET	Experiment Elapsed Time
EETCS	Early External Thermal Control System
EFGF	Electrical Flight-releasable Grapple Fixture
EGIL	Electrical Generation and Integrated Lighting Systems Engineer
EIA	Electrical Interface Assembly
EMPEV	Emergency Manual Pressure Equalization Value
EMU	Extravehicular Mobility Unit
EOA	EVA Ohmmeter Assembly
EPCE	Electrical Power Consuming Equipment
EPG	Electrical Power Generator
EPS	Electrical Power System
ER	Edge Router
ESA	External Sampling Adapter
ESP	External Stowage Platform
ESSMDM	Enhanced Space Station Multiplexer/Demultiplexer
ESU	End Stop Unit
ETCS	External Thermal Control System
ETI	Elapsed Time Indicator
ETRS	EVA Temporary Rail Stop
ETSD	EVA Tool Storage Device
ETVCG	External Television Cameras Group

EUE	Experiment Unique Equipment
EV	Extravehicular
EV-CPDS	Extravehicular-Charged Particle Directional Spectrometer
EVA	Extravehicular Activity
EVR	Extravehicular Robotics
EVSU	External Video Switching Unit
EXPRESS	EXpedite the PRocessing of Experiments to the Space Station
EXT	Experimental Terminal
EWIS	External Wireless Instrumentation System
FAWG	Flight Assignment Working Group
FC	Firmware Controller
FCC	Flat Controller Circuit
FCT	Flight Control Team
FCV	Flow Control Valve
FD	Flight Day
FDA	Fault Detection Annunciation
FDIR	Failure, Detection, Isolation and Recovery
FDS	Fire Detection and Suppression
FET	Field Effect Transistor
FGB	Functional Cargo Block
FHRC	Flex Hose Rotary Coupler
FI	Fault Isolator
FPU	Fluid Pumping Unit
FQDC	Fluid Quick Disconnect Coupling
FRD	Flight Requirements Document
FRGF	Flight Releasable Grapple Fixture
FSE	Flight Support Equipment
FSS	Fluid System Servicer
FWCI	Firmware Configuration Item
GAS	Get Away Special
GC	Growth Cell
GCA	Growth Cell Assembly
GFE	Government-Furnished Equipment
GFI	Ground Fault Interrupter
GJOP	Generic Joint Operations Panel
GLONASS	GLObal Navigational Satellite System
GN&C	Guidance, Navigation and Control
GNC	Guidance Navigation Computer
GPC	General Purpose Computer
GPRV	Gas Pressure regulating Valve

GPS	Global Positioning System
GUI	Graphical User Interface
H_2	Hydrogen
HAB	Habitat Module
HC	Hand Controller
HCA	Hollow Cathode Assembly
HCOR	High-Rate Communication Outage Recorder
HDR	High Data Rate
HDRL	High Date Rate Link
HEPA	High Efficiency Particulate Air
HGA	High Gain Antenna
HHL	Handheld Lidar
HP	Heat Pipe
HPGT	High Pressure Gas Tank
HRF	Human Research Facility
HRF-PUF-DK	Human Research Facility Puff Data Kit
HRF-Res	Human Research Facility Resupply
HRFM	High Rate Frame Multiplexer
HRM	High Rate Modem
HRS	Hand Reaction Switch
I/F	Interface
I/O	Input/Output
IAC	Internal Audio Controller
IAS	Internal Audio Subsystem
IATCS	Internal Active Thermal Control System
ICC	Integrated Cargo Carrier
ICOM	Intercom
IDA	Integrated Diode Assembly
IDRD	Increment Definition Requirements Document
IEA	Integrated Equipment Assembly
IFHX	Interface Heat Exchanger
IFI	Item for Investigation
IFM	In-flight Maintenance
IMCA	Integrated Motor Control Assembly
IMCS	Integrated Mission Control System
IMU	Impedance Matching Unit
IMV	Intermodule Ventilation
INCO	Instrumentation and Communication Officer
INSTM	Instrumentation
INT	Internal
INTSYS	Internal Systems

IOC	Input/Output Controller
IOCU	Input/Output Controller Unit
IP	International Partner
IRU	In-Flight Refill Unit
ISA	Internal Sampling Adapter
ISIS	International Space Station Interface Standard
ISL	Integrated Station LAN
ISO	Inventory and Stowage Officer
ISPR	International Standard Payload Rack
ISS	International Space Station
ISSPO	International Space Station Program Office
ISSSH	International Space Station Systems Handbook
IT	Integrated Truss
ITCS	Internal Thermal Control System
ITS	Integrated Truss Segment
IUA	Interface Umbilical Assembly
IV	Intravehicular
IVA	Intravehicular Activity
IVSU	Internal Video Switch Unit
IWIS	Internal Wireless Instrumentation System
JAXA	Japan Aerospace Exploration Agency
JEM	Japanese Experiment Module
JEU	Joint Electronic Unit
KSC	Kennedy Space Center
kW	Kilowatt
LA	Launch Aft
Lab	Laboratory
LAN	Local Area Network
LB	Local Bus
LB-RWS	RWS Local Bus
LCA	Lab Cradle Assembly
LCC	Launch Commit Criteria
LCD	Liquid Crystal Display
LDI	Local Data Interface
LDR	Low Data Rate
LDU	Linear Drive Unit
LED	Light-Emitting Diode
LEE	Latching End Effector
LEU	LEE Electronic Unit
LFDP	Load Fault Detection Protection

LGA	Low Gain Antenna
LH_2	Liquid Hydrogen
LLA	Low Level Analog
LMC	Lightweight Multipurpose Carrier
LO_2	Liquid Oxygen
LON	Launch On Need
LT	Low Temperature
LTA	Launch to Activation
LTL	Low Temperature Loop
LTU	Load Transfer Unit
LVLH	Local Vertical Local Horizontal
MA	Mechanical Assembly
MAM	Manual Augmented Role
MBA	Motorized Bolt Assembly
MBE	Metal Bellows Expander
MBM	Manual Berthing Mechanism
MBS	Mobile Remote Service Base System
MBSU	Main Bus Switching Unit
MC	Midcourse Correction
MCA	Major Constituent Analyzer
MCAS	MBS Common Attach System
MCC	Mission Control Center
MCC-H	Mission Control Center-Houston
MCC-M	Mission Control Center-Moscow
MCDS	Multifunction CRT Display System
MCS	Motion Control System
MCU	MBS Computer Unit
MDA	Motor Drive Assembly
MDL	Middeck Locker
MDM	Multiplexer/Demultiplexer
MED OPS	Medical Operations
MEPS	Microencapsulation Electrostatic Processing System
MEPSI	Micro-Electromechanical System-based Pico Satellite Inspector
MER	Mission Evaluation Room
MET	Mission Elapsed Time
METOX	Metal Oxide
MFCV	Manual Flow Control Valve
MHS	MCU Host Software
MIL-STD	Military Standard
MILA	Mode Indicating Light Assembly
MIP	Mission Integration Plan

MISSE	Materials International Space Station Experiment
MLI	Multi-Layer Insulation
MM/OD	Micrometeoroid/Orbital Debris
MMT	Mission Management Team
MOD	Mission Operations Directorate
MPEV	Manual Pressure Equalization Valve
MPLM	Multipurpose Logistics Module
MPM	Manipulator Positioning Mechanism
MRL	Manipulator Retention Latch
MRS	Mobile Remote Servicer
MRSBS	Mobile Remote Servicer Base System
MSD	Mass Storage Device
MSFC	Marshall Space Flight Center
MSG	Microgravity Science Glovebox
MSS	Mobile Servicing System
MT	Mobile Transporter
MTCL	Mobile Transporter Capture Latch
MTL	Moderate Temperature Loop
MTS	Module-to-Truss Segment
MTSAS	Module-to-Truss Segment Attachment System
MTWsN	Move to Worksite Number
	Module-to-Truss Segment Attachment System
N_2	Nitrogen
N. mi.	Nautical mile
NASA	National Aeronautics and Space Administration
NCC	Nominal Corrective Combination burn
NCG	Non Condensable Gas
NCS	Node Control Software
NCU	Network Control Unit
NET	No Earlier Than
NIA	Nitrogen Interface Assembly
NiH_2	Nickel Hydrogen
NIV	Nitrogen Introduction Valve
NSI	NASA Standard Initiator
NSTS	National Space Transportation System
NTA	Nitrogen Tank Assembly
O_2	Oxygen
OCA	Orbital Communications Adapter
OCAD	Operational Control Agreement Document
OCJM	Operator-Commanded Joint Position Mode
OCPM	Operator-Commanded POR Mode

OCS	Operations and Control Software
ODIN	Orbital Design Integration System
ODS	Orbiter Docking System
OI	Operational Increment
OIU	Orbiter Interface Unit
OIV	Oxygen Isolation Valve
OMI	On-Orbit Maintainable Item
OMS	Orbital Maneuvering System
OPCGA	Observable Protein Crystal Growth Apparatus
OPP	OSVS Patch Panel
Ops	Operations
OPS LAN	Operations Local Area Network
ORBT	Optimized RBar Targeting Technique
ORCA	Oxygen Recharge Compressor Assembly
ORU	Orbital Replacement Unit
OSE	Orbiter Support Equipment
OSO	Operations Support Officer
OSVS	Orbiter Space Vision System
OTD	ORU Transfer Device
OV	Orbiter Vehicle
P&S	Pointing and Support
P-Code	Precision Code
P/L	Payload
P/TV	Photo/Television
P3/P4	Port 3/Port 4
PAS	Payload Attach System
PBA	Portable Breathing Apparatus
PC	Personal Computer
PCA	Pressure Control Assembly
PCAM	Protein Crystallization Apparatus for Microgravity
PCBM	Passive Common Berthing Mechanism
PCC	Power Converter Controller
PCG-STES	Protein Crystal Growth-Single Thermal Enclosure System
PCMCIA	Personal Computer Memory Card International Adapter
PCP	Pressure Control Panel
PCR	Portable Computer Receptacle
PCS	Portable Computer System
PCT	Post-Contact Thrusting
PCU	Plasma Connector Unit
PCVP	Pump and Control Valve Package
PDGF	Power and Data Grapple Fixture

PDI	Payload Data Interface
PDIP	Payload Data Interface Panel
PDRS	Payload Deployment and Retrieval System
PDTA	Power Data Transfer Assembly
PDU	Power Drive Unit
PEHG	Payload Ethernet Hub Gateway
PF	Payload Forward
PFCS	Pump Flow Control Subassembly
PFE	Portable Fire Extinguisher
PFMC	Pump/Fan Motor Controller
PFR	Portable Foot Restraint
PGBA-S	Plant Generic Bioprocessing Apparatus-Stowage
PGSC	Portable General Support Computer
PGT	Pistol Grip Tool
PHALCON	Power, Heating, Articulation, Lighting, and Control Officer
PJPAM	Pre-stored Joint Position Autosequence Mode
PLB	Payload Bay
PM	Pump Module
PMA	Pressurized Mating Adapter
PMCU	Power Management Control Unit
PMDIS	Perceptual Motor Deficits In Space
PMP	Payload Mounting Panel
POA	Payload/ORU Accommodation
POC	Portable Onboard Computer
POR	Point of Reference
POST	Power ON Self-Test
PP	Planning Period
PPA	Pump Package Assembly
PPAM	Pre-stored POR Autosequence Mode
ppO_2	partial pressure of oxygen
PPRV	Positive Pressure Relief Valve
PPT	Precipitate
PRD	Payload Retention Device
PRLA	Payload Retention Latch Assembly
Prox-Ops	Proximity Operations
PSN	Power Source Node
PSP	Payload Signal Processor
PTB	Payload Training Buffer
PTCS	Passive Thermal Control System
PTR	Port Thermal Radiator
PTU	Pan/Tilt Unit
PV	Photovoltaic

PVCA	Photovoltaic Controller Application
PVCE	Photovoltaic Controller Element
PVCU	Photovoltaic Controller Unit
PVM	Photovoltaic Module
PVR	Photovoltaic Radiator
PVRGF	Photovoltaic Radiator Grapple Fixture
PVTCS	Photovoltaic Thermal Control System
PWP	Portable Work Platform
PWR	Portable Water Reservoir
PYR	Pitch Yaw Roll
QD	Quick Disconnect
R/F	Refrigerator/Freezer
R&R	Removal and Replacement
RACU	Russian-to-American Converter Unit
RAIU	Russian Audio Interface Unit
RAM	Random Access Memory
RAMV	Rheostat Air Mix Valve
RB	Radiator Beam
RBB	Right Blanket Box
RBI	Remote Bus Isolator
RBVM	Radiator Beam Valve
RCC	Reinforced Carbon-Carbon
RCS	Reaction Control System
RDA	Retainer Door Assembly
RF	Radio Frequency
RFCA	Rack Flow Control Assembly
RFG	Radio Frequency Group
RGA	Rate Gyro Assemblies
RHC	Rotational Hand Controller
RHX	Regenerative Heat Exchanger
RIC	Rack Interface Controller
RJMC	Rotary Joint Motor Controller
RMS	Remote Manipulator System
ROBO	Robotics Operations Support Officer
ROS	Russian Orbital Segment
RP	Receiver/Processor
RPC	Remote Power Controller
RPCM	Remote Power Controller Module
RPDA	Remote Power Distribution Assembly
RPM	Rbar Pitch Maneuver
RPOP	Rendezvous and Proximity Operations Program

RS	Russian Segment
RSC	RMS Sideview Camera
RSP	Resupply Stowage Platform
RSR	Resupply Stowage Rack
RSTS	Rack Standalone Temperature Sensor
RSU	Roller Suspension Unit
RT	Remote Terminal
RT-Box	Reaction Time Box
RTAS	Rocketdyne Truss Attachment System
RTD	Resistive Thermal Device
RTL	Ready to Latch
RWS	Robotic Workstation
S	Starboard
S&M	Structures and Mechanisms
S3/S4	Starboard 3/Starboard 4
SA	Solar Array
SABB	Solar Array Blanket Box
SAGE	Space Arabidoposis Genomics Experiment
SARJ	Solar Alpha Rotary Joint
SARJ_C	SARJ Controller
SARJ_M	SARJ Manager
SASA	S-band Antenna Support Assembly
SAW	Solar Array Wing
SCA	Switchgear Controller Assembly
SCI	Signal Conditioning Interface
SCU	Service and Cooling Umbilical
SD	Smoke Detector
SDO	Solenoid Driver Output
SDS	Sample Delivery System
SEM	Shunt Electronics Module
SEPS	Secondary Electrical Power Subsystem
SFCA	System Flow Control Assembly
SFU	Squib Firing Unit
SGANT	Space-to-Ground Antenna
SHOSS	Spacehab Oceaneering Space System
SHOT	Space Hardware Optimization Technology
SIGI	Space Integrated Global Positioning System/Inertial Navigation System
SJRM	Single Joint Rate Mode
SLDP	Spacelab Data Processing
SLP	Spacelab Logistics Pallet
SM	Service Module

SMCC	Shuttle Mission Control Center
SMDP	Service Module Debris Panel
SOC	State of Charge
SOV	Shutoff Valve
SPCE	Servicing Performance and Checkout Equipment
SPD	Spool Positioning Device
SPDA	Secondary Power Distribution Assembly
SPDM	Special Purpose Dexterous Manipulator
SPG	Single-Point Ground
SRMS	Shuttle Remote Manipulator System
SSAS	Segment-to-Segment Attach System
SSBA	Space Station Buffer Amplifier
SSC	Station Support Computer
SSMDM	Space Station Multiplexer/Demultiplexer
SSOR	Space-to-Space Orbiter Ratio
SSP	Standard Switch Panel
SSPTS	Station-to-Shuttle Power Transfer System
SSRMS	Space Station Remote Manipulator System
SSSH	Space Shuttle Systems Handbook
SSSR	Space-to-Space Station Radio
SSU	Sequential Shunt Unit
STCR	Starboard Thermal Control Radiator
STES	Single Thermal Enclosure System
STR	Starboard Thermal Radiator
SVS	Space Vision System
TA	Thruster Assist
TAA	Triaxial Accelerometer Assembly
TAH	Tray Actuation Handle
TBA	Trundle Bearing Assembly
TC	Terminal Computer
TCCS	Trace Contaminant Control Subassembly
TCCV	Temperature Control and Check Valve
TCS	Trajectory Control Sensor
TD	Translation Drive
TDRS	Tracking and Data Relay Satellite
TDRSS	Tracking and Data Relay Satellite System
TEA	Torque Equilibrium Attitude
TFR	Translation Foot Restraint
THC	Temperature and Humidity Control
THOR	Thermal Operations and Resources Officer
TI	Terminal Phase Initiation

TORF	Twice Orbital Rate Flyaround
TORU	Teleoperator Control Mode
TORVA	Twice Orbital Rate +Rbar to +Vbar Approach
TPL	Transfer Priority List
TRAC	Test of Reaction and Adaption Capabilities
TRC	Transmitter Receiver Controller
TRRJ	Thermal Radiator Rotary Joint
TSP	Twisted Shielded Pair
TTCR	Trailing Thermal Control Radiator
TUS	Trailing Umbilical System
TVIS	Treadmill Vibration Isolation System
TWMV	Three-Way Mixing Valve
UB	User Bus
UCCAS	Unpressurized Cargo Carrier Attach System
UDG	User Data Generation
UF	Utilization Flight
UHF	Ultrahigh Frequency
UIA	Umbilical Interface Assembly
ULCAS	Unpressurized Logistics Carrier Attach System
UIP	Utility Interface Panel
ULF	Utilization Logistics Flight
UMA	Umbilical Mechanism Assembly
UOP	Utility Outlet Panel
USA	United Space Alliance
USL	U.S. Laboratory
USOS	United States On-Orbit Segment
UTA	Utility Transfer Assembly
VAJ	Vacuum Access Jumper
VBSP	Video Baseband Signal Processor
VCP	Video Camera Port
VCSA	Video Camera Support Assembly
VDS	Video Distribution System
VDU	Video Distribution Unit
VES	Vacuum Exhaust System
VGS	Video Graphics Software
VRCV	Vent/Relief Control Valve
VRIV	Vent/Relief Isolation Valve
VRS	VES Resource System
VRV	Vent/Relief Valve
VSC	Video Signal Converter

VSSA	Video Stanchion Support Assembly
W/S	Worksite
WETA	WVS External Transceiver Assembly
WHS	Workstation Host Software
WIF	Worksite Interface
WRM	Water Recovery Management
WS	Water Separator
WVA	Water Vent Assembly
XPOP	X-axis Pointing Out of Plane
ZCG-SS	Zeolite Crystal Growth—Sample Stowage
ZSR	Zero-g Stowage Rack

MEDIA ASSISTANCE

NASA TELEVISION TRANSMISSION

NASA Television is carried on an MPEG-2 digital signal accessed via satellite AMC-6, at 72 degrees west longitude, transponder 17C, 4040 MHz, vertical polarization. For those in Alaska or Hawaii, NASA Television will be seen on AMC-7, at 137 degrees west longitude, transponder 18C, at 4060 MHz, horizontal polarization. In both instances, a Digital Video Broadcast (DVB)-compliant Integrated Receiver Decoder (IRD) (with modulation of QPSK/DBV, data rate of 36.86 and FEC 3/4) will be needed for reception. The NASA Television schedule and links to streaming video are available at:

http://www.nasa.gov/ntv

NASA TV's digital conversion will require members of the broadcast media to upgrade with an 'addressable' Integrated Receiver De-coder, or IRD, to participate in live news events and interviews, media briefings and receive NASA's Video File news feeds on a dedicated Media Services channel. NASA mission coverage will air on a digital NASA Public Services ("Free to Air") channel, for which only a basic IRD will be needed.

Television Schedule

A schedule of key on-orbit events and media briefings during the mission will be detailed in a NASA TV schedule posted at the link above. The schedule will be updated as necessary and will also be available at:

Status Reports

Status reports on launch countdown and mission progress, on-orbit activities and landing operations will be posted at:

http://www.nasa.gov/shuttle

This site also contains information on the crew and will be updated regularly with photos and video clips throughout the flight.

Briefings

A mission press briefing schedule will be issued before launch. The updated NASA television schedule will indicate when mission briefings are planned.

More Internet Information

Information on the International Space Station is available at:

http://www.nasa.gov/station

Information on safety enhancements made since the Columbia accident is available at:

http://www.nasa.gov/returntoflight/system/index.html

Information on other current NASA activities is available at:

http://www.nasa.gov

Resources for educators can be found at the following address:

http://education.nasa.gov

This page intentionally left blank.

PUBLIC AFFAIRS CONTACTS

HEADQUARTERS
WASHINGTON, DC

Michael Braukus
Public Affairs Officer
International Partners
202-358-1979
michael.j.braukus@nasa.gov

Katherine Trinidad
Public Affairs Officer
Space Operations
202-358-3749
katherine.trinidad@nasa.gov

John Yembrick
Public Affairs Officer
Space Operations
202-358-0602
john.yembrick-1@nasa.gov

JOHNSON SPACE CENTER
HOUSTON, TEXAS

James Hartsfield
News Chief
281-483-5111
james.a.hartsfield@nasa.gov

Kyle Herring
Public Affairs Specialist
Space Shuttle Program Office
281-483-5111
kyle.j.herring@nasa.gov

Rob Navias
Program and Mission Operations Lead
281-483-5111
rob.navias-1@nasa.gov

Kylie Clem
Public Affairs Specialist
Mission Operations Directorate and Shuttle Crew
281-483-5111
kylie.s.clem@nasa.gov

Nicole Cloutier-Lemasters
Public Affairs Specialist
Space Station Crew
281-483-5111
nicole.cloutier-1@nasa.gov

KENNEDY SPACE CENTER
CAPE CANAVERAL, FLORIDA

Allard Beutel
News Chief
321-861-4769
allard.beutel@nasa.gov

George Diller
Public Affairs Specialist
Space Shuttle
321-867-2468
george.h.diller@nasa.gov

Tracy Young
Public Affairs Specialist
International Space Station
321-867-2468
tracy.g.young@nasa.gov

MARSHALL SPACE FLIGHT CENTER
HUNTSVILLE, ALABAMA

Dom Amatore
Public Affairs Manager
256-544-0034
dominic.a.amatore@nasa.gov

June Malone
Public Affairs Specialist
News Chief/Media Manager
256-544-0034
june.e.malone@nasa.gov

Steve Roy
Public Affairs Specialist
Space Shuttle Propulsion
256-544-0034
steven.e.roy@nasa.gov

STENNIS SPACE CENTER MISSISSIPPI

Linda Theobald
Public Affairs Specialist
228-688-3249
linda.l.theobald@nasa.gov

Paul Foerman
News Chief
228-688-1880
paul.foerman-1@nasa.gov

Rebecca Strecker
Public Affairs Specialist
228-688-3346
rebecca.a.strecker@nasa.gov

AMES RESEARCH CENTER MOFFETT FIELD, CALIFORNIA

Mike Mewhinney
News Chief
650-604-3937
michael.mewhinney@nasa.gov

Jonas Dino
Public Affairs Specialist
650-604-5612
jonas.dino@nasa.gov

DRYDEN FLIGHT RESEARCH CENTER CALIFORNIA

Alan Brown
News Chief
661-276-2665
alan.brown@nasa.gov

Leslie Williams
Public Affairs Specialist
661-276-3893
leslie.a.williams@nasa.gov

GLENN RESEARCH CENTER CLEVELAND, OHIO

Lori Rachul
News Chief
216-433-8806
lori.j.rachul@nasa.gov

Katherine Martin
Public Affairs Specialist
216-433-2406
katherine.martin@nasa.gov

LANGLEY RESEARCH CENTER HAMPTON, VIRGINIA

Marny Skora
Head, News Media Office
757-864-3315
marny.skora@nasa.gov

Chris Rink
Public Affairs Officer
757-864-6786
christopher.p.rink@nasa.gov

Kathy Barnstorff
Public Affairs Officer
757-864-9886
katherine.a.barnstorff@nasa.gov

UNITED SPACE ALLIANCE

Mike Curie
Space Program Operations Contract
Houston Operations
281-483-9251
321-861-3805
michael.j.curie@usa-spaceops.com

Tracy Yates
Florida Operations
321-861-3956
tracy.e.yates@usa-spaceops.com

BOEING

Ed Memi
Media Relations
Boeing NASA Systems
281-226-4029
edmund.g.memi@boeing.com

This page intentionally left blank.