STS-118 / 13A.1

FD 05 Execute Package

MSG	Page(s)	Title
038A	1 - 2	FD05 Summary Timeline **(pdf)**
039A	3 - 12	FD05 Flight Plan Revision **(pdf)**
040	13 - 14	FD05 Mission Summary **(pdf)**
041A	---	FD04 MMT Summary **(pdf - Electronic Only)**
042	15 - 16	FD05 Transfer Message **(pdf)**
043	17	EVA 2 Tool Config and Procedure Deltas **(pdf)**
044	18 - 25	Handover Attitude Control Orbiter To CMG-Only Without RS SMT
045	26	Focused Inspection A31p Laptop Config **(pdf)**
046	27 - 45	Focused Inspection Procedure **(pdf)**
047	---	TPS Classification Flight Rule Summary **(pdf - Electronic Only)**
034A	---	PAO Education Events Overview **(pdf - Electronic Only)**

Approved by FAO: *Jaime Marshik*

Last Updated: Aug 12 2007 9:47AM GMT
JEDI *(**J**oint **E**xecute package **D**evelopment and **I**ntegration), v2.04.0003*

NO EXERCISE during OBSS GRPL H/O | NO EXERCISE during FOCUSED INSPECTION 08/12/07 04:26:00 | NO EXERCISE during OBSS GRPL H/O | **REPLANNED**

GMT 08/12/07 (224) β = 38.52 MET Day 003

12 13 14 15 16 17 18 19 20 21 22 23 004/00

FD05 ISS EXTL SVV

STS-118	CDR/R3 KELLY	SLEEP; LOG; POST SLEEP; FI DOUG REVW; POST SLEEP; METX*; FOCUSED INSPECTION; MEAL; SAFER; SWAP; LDRI DNLK; EXERCISE; LDRI DNLK; IMU; SPGS#	
	PLT HOBAUGH	SLEEP; POST SLEEP; SSRMS GRPL OBSS UNBT; SSRMS OBSS MNVR-H/O; SSRMS; RLS; SSRMS FI SPPT; XFER; MEAL; SSRMS PGPL MNVR OBSS; OBSS GRPL; SSRMS OBSS BERTH; OBSS; RLS; PWR XFER (2); W/O PDGF 1	
	MS1/R1 CALDWELL	SLEEP; LOG; SLVA; POST SLEEP; FI DOUG REVW; PGRPL; POST SLEEP; MRL*; GRPL#; PGSC CONFIG FOR FI; FOCUSED INSPECTION; MEAL; SR/MS; UGPL; MRL*; PCRDL; MCIU#; EVA2 TOOL	
	MS2 MASTRACCHIO	SLEEP; ASPRN; SLOG; POST SLEEP; METOX; BATT; INSTT; EVA2 TOOL; BSA*; EMU BATT RCHG INIT; XFER; MEAL; E-LK PREP; SAFER C/O; EVA2 TOOL; EXERCISE; PSLP	
	MS3 WILLIAMS	SLEEP; ASPRN; SLVA; LOG; POST SLEEP; EXERCISE; METOX; BATT; INSTT; EVA2 TOOL; RPCM^; EMU BATT RCHG INIT; PMDIS MS3 DATA; CD*; XFER; MEAL; E-LK PREP; SAFER C/O; EVA2 TOOL; EPO XFER; EVA2 TOOL; P SLP	
	MS4/R2 MORGAN	SLEEP; SLVA; POST SLEEP - SHAB; FI DOUG REVW; PGRPL; POST SLEEP; MRL*; GRPL#; FOCUSED INSPECTION; MEAL; SR/MS; UGPL; EPO BAG PREP; MRL*; EPO KIT-C VIDEO; PRE SLEEP; XFER^	
	MS5 DREW	SLEEP; CDM#; POST SLEEP; XFR; UPDAT; POST SLEEP; PCS^; EXERCISE; CMRM-IAN; PWR#1 FILL; PGSC CONFIG FOR FI; XFER; MEAL; PGSC RCNFG POST FI; CBTM; DAILY; CBTM*; PWR#2 FILL; EPO XFER; CBTM#; CME-A; XFER^	
EXP 15	ISS CDR YURCHIKHIN	SLEEP (8.5); POST SLEEP; PWR ERP K; DPC; PWR ERP K; БВС-БОК3-КАБ-INST; MIDDAY-MEAL; БОК3 КАБ INST; IMS EDIT; TVIS+; EXERCISE TVIS; EXDL; PREP WORK	
	FE-1 KOTOV	SLEEP (8.5); POST SLEEP; PWR ERP K; DPC; PWR ERP K; БВС-БОК3-КАБ-INST; MIDDAY-MEAL; БОК3 КАБ INST; РБО-3; СОЖ МНТ; EXERCISE RED; PREP WORK	
	FE-2 ANDERSON	SLEEP (8.5); POST SLEEP; PWR ERP K; DPC; PWR ERP K; CGBA5; PLS*; SSRMS GRPL OBSS UNBT; SSRMS OBSS MNVR-H/O; PMDIS; RLS; SSRMS; SSRMS FI SPPT; MIDDAY-MEAL; GLOVE; ♣; SSRMS PGPL MNVR OBSS; OBSS GRPL; DCS; FFQ; SSRMS OBSS BERTH; OBSS; RLS; EPO XFER; PMDIS; STOW; W/O PDGF 1	
STS	DAY/NIGHT		
	ORBIT	56 57 58 59 60 61 62 63 64	
	TDRS	W -171; E -46; Z -275	
	ORB ATT	BIAS -XLV -ZVV	
ISS	SSRMS	WS4 PDGF1	
	NOTES	#DEACT; *ACT ^RECONNECT; *RELEASE; #OBSS*TERM; *TERM ^RETRIEVAL; *PMDIS; ♣PMDIS VID END; +SKIRT R&R; #FILTER CK; *VIDEO S/U#1; *LATCH; #ACT ^TAGUP; #STOW VIDEO	

GMT 08/12/07 (224) β= 36.10 MET Day 004

		004/00	01	02	03	04	05	06	07	08	09	10	11	12
		23	08/13	01	02	03	04	05	06	07	08	09	10	

STS-118	**FD05** CDR KELLY	SPGS#	EVA PROC RVW	MRLIN	PSLEEP	PMC A/G	PRE SLEEP					SLEEP		
	PLT HOBAUGH	♣	EVA PROC RVW	W/O PDGF1 - LAB*		PRE SLEEP						SLEEP		
	MS1 CALDWELL		EVA PROC RVW			PRE SLEEP						SLEEP		
	MS2 MASTRACCHIO	PSLP	EVA PROC RVW		PRE SLEEP		MASK PB/TOOL CONFIG	PRE SLEEP				SLEEP		
							10.2 DPRS	ISS A/L CAMPOUT @ 10.2 psi						
	MS3 WILLIAMS	PSLP	EVA PROC RVW		PRE SLEEP		MASK PB/TOOL CONFIG	PRE SLEEP				SLEEP		
	MS4 MORGAN	XFER^	EVA PROC RVW	W/O PDGF1 - LAB*		XFER	BREF	PRE SLEEP - SHAB				SLEEP		
	MS5 DREW	XFER^	EVA PROC RVW			PRE SLEEP						SLEEP		
EXP 15	ISS CDR YURCHIKHIN	⊕	EVA PROC RVW	DPC		PRE SLEEP						SLEEP (8.5)		
	FE-1 KOTOV	♦	EVA PROC RVW	DPC		PRE SLEEP						SLEEP (8.5)		
	FE-2 ANDERSON	♣	EVA PROC RVW	DPC	PRE SLEEP		PFC	PRE SLEEP				SLEEP (8.5)		

STS	DAY/NIGHT									
	ORBIT	64	65	66	67	68	69	70	71	72
	TDRS W -171									
	TDRS E -46									
	TDRS Z -275									
	ORB ATT	BIAS -XLV -ZVV								
ISS	SSRMS	W/O	LAB	MT XLT TO WS7	MT-WS7, SSRMS-LAB					

NOTES

♣W/O PDGF 1 *PDGF RLS & MNVR TO EVA2 START
⊕PREP WORK
♦PREP WORK
#ACT
^TAGUP

MSG INDEX

MSG NO.	TITLE
038	FD05 Summary Timeline
039	FD05 Flight Plan Revision
040	FD05 Mission Summary
041	FD04 MMT Summary
042	FD05 Transfer Message
043	EVA 2 Tool Config and Procedure Deltas
044	Handover Attitude Control Orbiter to CMG-Only Without RS SMTC
045	Focused Inspection A31p Laptop Config
046	Focused Inspection Procedure
047	TPS Classification Flight Rule Summary

1. Today's cryo config will have H2 tanks 1 and 4 active with dual heaters. O2 tank 2 will be active using manual heater ops.

   Reference MSG 032 for O2 TANK 2 Manual Heater Operations.

   R1 CRYO O2, H2 MANF VLV TK1 (two) - OP (tb-OP)
   O2 TK1 HTRS A, B (two) - OFF
   TK2 HTRS A - ON

   A11 CRYO TK4 HTRS O2 A, B (two) - OFF

2. PMDIS Data for MS3 on FD05 will be recorded on board. Since the POIC will manage the recorder (VTR-1), we request a call down to Huntsville when MS3 is ready to begin his session to ensure that we start recording at the appropriate time.

3. FD5 Water Activity Update
   Since SSPTS activation, fuel cell water production rates have been less than predicted preflight. CWC Fill #3 has been deleted from today's timeline. Delete reference to CWC Fill #3 from water ops cue card. PWR Fills #1 and #2 will be performed as written, ref MSG 5. Per the FD4 transfer call down, both PWR bags are temp stowed by the galley forward of the port lockers.

   An updated Water Ops Cue Card will be uplinked for FD6. To ensure total supply water is maintained above redline values, future water activities are being reevaluated.

4. The table below summarizes the Shuttle and ISS exercise constraints for today. These constraints are also noted in your timelines for your reference. Exercise scheduled for MS3\D. Williams this morning must be completed prior to dual grapple of the OBSS.

Activity	Exercise Constraints	
	Shuttle	ISS
Focused Inspection	No exercise while both arms are grappled to OBSS and during focused inspection	No exercise while both arms are grappled to OBSS and during focused inspection

5. Dave, Rick, and Clay, we have an item for airlock campout. Due to the beeping noises, we are planning to deactivate ATU 6 in the ISS airlock during crew sleep periods then re-activate it post sleep. You will have ATUs 4 and 5 available for use if needed during crew sleep periods, but the HCU extension cables and the EACP Y-cable mute the speakers when connected. Therefore, please remove all cables from ATUs 4 and 5 prior to sleep each night and plug them back in each morning. We will need you to call MCC each night to confirm that this has been completed before you go to sleep.

6. The FD5 Focused Inspection procedure utilizes ISS camera views (P1 Lower Outboard and SSRMS Tip Elbow) to provide big picture views. We are not expecting the need for much interaction for the camera views after they are setup but should adjustment be required, Scorch can be available. The ground (ISS team) will be prime for routing any ISS views to the Shuttle.

7. There are no SPACEHAB viewport violations for FD05.

8. We have uplinked another QuickTime video of the debris impact on the Orbiter wing to the ISS SSCs. The new video is located in U:\Temp\STS-118_Tile_Spray_Videos with the file name "SRF210_2422_debris_strike_enh.mov".

9. Your Focused Inspection procedure is in MSG 046. You will also have on board DOUG targets and a tile state file for your DOUG review. Let us know if you have any questions about the procedure or the DOUG review.

10. In <u>PRE-SLEEP ACTIVITY</u> (ORB OPS, <u>ECLS</u>) on page 3-2, delete step 2 from all future pre-sleep periods through EOM.

    In <u>POST-SLEEP ACTIVITY</u> (ORB OPS, <u>ECLS</u>) on page 3-7, delete step 6 from all future post-sleep periods through EOM.

11. For Scott, we have uplinked MSG 044, Handover Attitude Control Orbiter to CMG-Only Without RS SMTC, for the attitude handover SDTO for FD07. At your convenience, please take a look at this procedure and let us know if you have any questions.

12. REPLACE PAGES 2-14, 2-16, AND 3-44 THROUGH 3-51.

STS-118 FD05

GMT Date 08/12 (224) | W | TDRS E | Z | DORB 14 15 | ORB 56 57 58 | MET Day 003 | STS ATI

CDR KELLY

SLEEP

FLIGHT SLEEP LOG(ORB OPS, SDBI)
POST-SLEEP ACTIVITY
(ORB OPS, CREW SYS)

FI DOUG REVIEW
Ref. MSG 037, 045, & 046

POST-SLEEP ACTIVITY
(ORB OPS, CREW SYS)

PLT HOBAUGH

SLEEP

POST-SLEEP ACTIVITY
(ORB OPS, CREW SYS)

ROBO: 1.200 SSRMS OBSS UNBERTH AND HANDOFF
Unberth, Steps 1-8

ROBO: 1.200 SSRMS OBSS UNBERTH AND HANDOFF
Maneuver to Handoff,~Steps 9-13

MS1 CALDWELL

SLEEP

FLIGHT SLEEP LOG(ORB OPS, SDBI)
SALIVA COLLECT(ORB OPS, SDBI)
POST-SLEEP ACTIVITY
(ORB OPS, CREW SYS)

FI DOUG REVIEW
Ref. MSG 037, 045, & 046

OBSS H/O FROM SSRMS(WS4) TO SRMS
(PDRS FS, OBSS OPS)Pre Grapple, Steps 1-2

POST-SLEEP ACTIVITY
(ORB OPS, CREW SYS)

OBSS H/O FROM SSRMS(WS4) TO SRMS
(PDRS FS,OBSS OPS)
MRL Release, Steps 3-5

Notes

SSPTS OPCU C/O
Expect 'SPEC 179 OPCU CH VOLTS' msgs

UPLINK
321 Only
Box C2,D15,R1

FD05 EZ ACTIVITES
TEPC(STATUS CHECK)
(ORB OPS, CREW SYS)Step A6
OCAC Filter Inspect
Hard Reboot PGSCs (Except WLES & WORLDMAP)

BIAS -XLV -ZVV

STS-118 FD05

GMT Date 08/12 (224) | W | TDRS E | TDRS Z | DORB 14 | DORB 15 | ORB 56 | ORB 57 | ORB 58 | MET Day 003 | STS ATI | BIAS -XLV -ZVV | MS2 MASTRACCHIO | MS3 WILLIAMS | MS4 MORGAN | MS5 DREW | Notes

12:00 — 13:00 — 14:00 — 15:00 — 16:00

MS2 MASTRACCHIO

SLEEP

TAKE 1 ASPIRIN (325mg)
FLIGHT SLEEP LOG(ORB OPS, SDBI)
POST-SLEEP ACTIVITY
(ORB OPS, CREW SYS)

MS3 WILLIAMS

SLEEP

TAKE 1 ASPIRIN (325mg)
SALIVA COLLECT(ORB OPS, SDBI)
FLIGHT SLEEP LOG(ORB OPS, SDBI)
POST-SLEEP ACTIVITY
(ORB OPS, CREW SYS)

EXERCISE

MS4 MORGAN

SLEEP

SALIVA COLLECT(ORB OPS, SDBI)
POST-SLEEP ACTIVITY
(ORB OPS, CREW SYS)

SH POST-SLEEP CONFIG
(SH OPS, ON-ORBIT)

FI DOUG REVIEW
Ref. MSG 037, 045, & 046

OBSS H/O FROM SSRMS(WS4) TO SRMS
(PDRS FS, OBSS OPS)Steps 1-2

POST-SLEEP ACTIVITY
(ORB OPS, CREW SYS)

OBSS H/O FROM SSRMS(WS4) TO SRMS
(PDRS FS,OBSS OPS)
MRL Release, Steps 3-5

MS5 DREW

SLEEP

CDM DEACT(ORB OPS, CDM DTO)
POST-SLEEP ACTIVITY
(ORB OPS, CREW SYS)

DAILY TRANSFER LIST UPDATE
Ref. MSG 042

POST-SLEEP ACTIVITY
(ORB OPS, CREW SYS)

JNT OPS: 2.306 PCS RECONNECT

EXERCISE

STS-118 FD05

GMT Date 08/12 (224) | W | TDRS E | TDRS Z | DORB 2 | DORB 3 | DORB 4 | ORB 59 | ORB 60 | ORB 61 | MET Day 003 | STS ATI | BIAS -XLV -ZVV

MET	CDR KELLY	PLT HOBAUGH	MS1 CALDWELL	Notes
16:00		ROBO: 1.200 SSRMS OBSS UNBERTH AND HANDOFF Maneuver to Handoff, Steps 9-13		
15:00			OBSS H/O FROM SSRMS(WS4) TO SRMS (PDRS FS, OBSS OPS) Grapple, Steps 6-7	**NO EXERCISE during OBSS GRPL H/O**
		ROBO: 1.200 SSRMS OBSS UNBERTH AND HANDOFF OBSS Ungrapple, Step 14		
17:00	EVA SYS: 1.510 METOX REGEN Terminate steps	ROBO: 1.210 SSRMS FOCUSED INSPECTION SUPPORT Steps 1-3	FOCUS INSPECTION A31P LAPTOP CNFG A31p LAPTOP SETUP Ref. MSG 045, Step 1	UPLINK B21 Only Box C2,D14
16:00	FOCUSED INSPECTION Ref. MSG 046		FOCUSED INSPECTION Ref. MSG 046	
18:00				**NO EXERCISE during Focused Inspection**
17:00		TRANSFER Ref. Transfer List & MSG 042		
19:00				
18:00		MEAL		
20:00				

STS-118 FD05

GMT Date 08/12 (224) | W | TDRSE | Z | DORB | ORB | MET Day 003 | STS ATI

MS2 MASTRACCHIO | MS3 WILLIAMS | MS4 MORGAN | MS5 DREW | Notes

16:00
15:00
17:00
16:00
17:00
18:00
19:00
18:00
20:00

BIAS-XLV-ZVV

MS2 MASTRACCHIO

EVA SYS: 1.515 EMU METOX/LIOH/ BATTERY REPLACEMENT

PRE EVA 2 TOOL CONFIG
(EVA, TIMELINES)
Ref. MSG 043

EVA SYS: 1.605 BSA BATT RECHRG
Terminate Steps

EVA SYS: 1.605 BSA BATTERY RECHARGE
Initiate steps
Charge EMU batteries from EVA1

TRANSFER
Ref. MSG 042 &
SH Xfer List: Item 123

MS3 WILLIAMS

EXERCISE

EVA SYS: 1.515 EMU METOX/LIOH/ BATTERY REPLACEMENT

PRE EVA 2 TOOL CONFIG
(EVA, TIMELINES)
Ref. MSG 043

RPCM RETRIEVAL [A]
Ref. SH Xfer List: Item #161

EVA SYS: 1.605 BSA BATTERY RECHARGE
Initiate steps
Charge EMU batteries from EVA1

PODF: 2.003 PMDIS EXPERIMENT OPS
Skip step 27, Crew ID = S5
Note: No Exercise 20 min prior.
Must complete prior 4/00:00
Ref. MSG 039, Item 2

PODF: 2.006 BURNING A CD W/PMDIS [B]

[B] Ref. MDDK Xfer List: Item 717

TRANSFER
Ref. MSG 042 &
SH Xfer List: Items 123-126, 127-129

MS4 MORGAN

OBSS H/O FROM SSRMS(WS4) TO SRMS
(PDRS FS, OBSS OPS)
Grapple, Steps 6-7

FOCUSED INSPECTION
Ref. MSG 046

[A] RPCM RETRIEVAL
Retrieve RPCM p/n r077419-61,
S/N C326597, or C401754
from 2.0 CTB at LAB1D2

MS5 DREW

EXERCISE
CCM-A STATUS CK(PL OPS, CCM-A)
MERLIN STAT CK(PL OPS,MERLIN/SPEGIS)
PWR FILL(ORB OPS, ECLS)
Perform WATER FILL #1

Ref. MSG 005 &
MSG 039, Item 3

FOCUS INSPECTION A31P LAPTOP CNFG
A31p LAPTOP SETUP
Ref. MSG 045, Step 1

TRANSFER
Ref. Ref. MSG 042 &
MDDK Xfer List: Items 13-15
SH Xfer List: Items 103, 122, 183-188, 190, 627, 632-633

Notes

NO EXERCISE during OBSS GRPL H/O

NO EXERCISE during Focused Inspection

STS-118 FD05

GMT Date 08/12 (224) | W | TDRS E | Z | DORB 4 5 6 7 | ORB 61 62 63 64 | MET Day 003 | STS ATI

BIAS-XLV-ZVV

MET	CDR KELLY	PLT HOBAUGH	MS1 CALDWELL	Notes
20:00	FOCUSED INSPECTION Ref. MSG 046	MEAL	FOCUSED INSPECTION Ref. MSG 046	**NO EXERCISE during Focused Inspection**
19:00		ROBO: 1.210 SSRMS FOCUSED INSPECTION SUPPORT OBSS Pre Grapple, Step 4		UPLINK 321 Only Box C2,D15,R1
21:00	MEAL	ROBO: 1.220 SSRMS OBSS HANDOFF AND BERTH Grapple, Steps 1-3	MEAL	
20:00	EVA SYS: 1.310 SAFER STOW [A] Stow SAFER s/n 1003, Ref. SH Xfer List: Item #746	[A] SAFER STOW NOTE: Verify SAFER Latch Guards not stowed for return	OBSS H/O FROM SRMS TO SSRMS(WS4) (PDRS FS, OBSS OPS) Ungrapple & Backoff, Steps 2-5	**NO EXERCISE during OBSS GRPL H/O**
22:00	PLAYBACK (DIGITAL) (P/TV, CUE CARD) FOCUSED INSPECTION KU TDRW (21:59 - 22:17)	ROBO: 1.220 SSRMS OBSS HANDOFF AND BERTH Maneuver to Berth, and Berth Steps 4-9.2		
21:00		ROBO: 1.220 SSRMS OBSS HANDOFF AND BERTH Complete Berth & Release Steps 9.3-12.3(end)	OBSS H/O FROM SRMS TO SSRMS(WS4) (PDRS FS, OBSS OPS) STBD MRL Latch, Steps 6-7	
23:00	EXERCISE	PWR TRANSFER Transfer 2 PWRs to ISS Ref. MSG 005	OBSS H/O FROM SRMS TO SSRMS(WS4) (PDRS FS, OBSS OPS)Precradle,Step 8 L17 Check MCIU filter screen PRE EVA 2 TOOL CONFIG (EVA, TIMELINES) Ref. MSG 043	
22:00	PLAYBACK (DIGITAL) (P/TV, CUE CARD) FOCUSED INSPECTION KU TDRW (23:23 - 23:45)			
00:00	IMU STAR OF OPPTY ALIGN(ORB OPS,GNC) SPEGIS CANISTER ACT (PL OPS, MERLIN/SPEGIS)	ROBO: 1.230 SSRMS WALKOFF PDGF1 TO LAB PDGF Lab PDGF Grapple, Steps 1-5		

STS-118 FD05

GMT Date 08/12 (224) | W | TDRSE | Z | DORB | ORB | MET Day 003 | STS ATI

MS2 MASTRACCHIO

- MEAL
- EVA SYS: 1.305 EQUIP LOCK PREP
  Steps 7-34, (In Step 34: confirm PBAs-4 isolated crew)
- SAFER CHECKOUT
  (EVA, CHECKOUTS)
  Ref. SH Xfer List: Item 123
  Checkout SAFER s/n 1004 from Shuttle. Disregard SAFER latch guard steps.
  When complete, stow.
- PRE EVA 2 TOOL CONFIG
  (EVA, TIMELINES)
  Ref. MSG 043
- EXERCISE
- PRE-SLEEP ACTIVITY
  (ORB OPS, CREW SYS)

MS3 WILLIAMS

- MEAL
- EVA SYS: 1.305 EQUIP LOCK PREP
  Steps 7-34, (In Step 34: confirm PBAs-4 isolated crew)
- SAFER CHECKOUT
  (EVA, CHECKOUTS)
  Ref. SH Xfer List: Item 123
  Checkout SAFER s/n 1004 from Shuttle. Disregard SAFER latch guard steps.
  When complete, stow.
- PRE EVA 2 TOOL CONFIG
  (EVA, TIMELINES)
  Ref. MSG 043
- EPO KIT-C XFER VIDEO
  (PL OPS, EPO)
- PRE EVA 2 TOOL CONFIG
  (EVA, TIMELINES)
  Ref. MSG 043
- PRE-SLEEP ACTIVITY
  (ORB OPS, CREW SYS)

MS4 MORGAN

- FOCUSED INSPECTION
  Ref. MSG 046
- MEAL
- OBSS H/O FROM SRMS TO SSRMS(WS4)
  (PDRS FS, OBSS OPS)
  Ungrapple & Backoff, Steps 2-5
- EPO KIT-C DRINK BAG PREP
  (PL OPS, EPO)
- OBSS H/O FROM SRMS TO SSRMS(WS4)
  (PDRS FS, OBSS OPS)
  STBD MRL Latch, Steps 6-7
- EPO KIT-C XFER VIDEO
  (PL OPS, EPO)
  Ref. SH Xfer List: Item 132.1
- PRE-SLEEP ACTIVITY
  (ORB OPS, CREW SYS)
- DAILY STS/ISS CREW TRANSFER TAGUP

MS5 DREW

- TRANSFER
  Ref. Ref. MSG 042 &
  MDDK Xfer List: Items 13-15
  SH Xfer List: Items 103, 122, 183-188, 190, 627, 632-633
- MEAL
- FOCUS INSPECTION A31P LAPTOP CNFG
  A31p LAPTOP TEARDOWN
  Ref. MSG 045, Step 2
- CBTM STATUS CHECK
  (PL OPS, CBTM)
- CBTM VID PREP(PL OPS,CBTM)Step1-7
- PWR FILL (ORB OPS, ECLS)
  Perform WATER FILL #2
  Ref. MSG 005 &
  MSG 039, Item 3
- EPO KIT-C XFER VIDEO
  (PL OPS, EPO)
- CBTM VID PREP(PL OPS,CBTM)Step 8
- CCM-A STATUS CK(PL OPS, CCM-A)
- DAILY STS/ISS CREW TRANSFER TAGUP

Notes

- **NO EXERCISE during Focused Inspection**
- **NO EXERCISE during OBSS GRPL H/O**

STS-118 FD05

GMT Date 08/12 (224) | W | TDRS E | TDRS Z | DORB 7 | DORB 8 | DORB 9 | ORB 64 | ORB 65 | ORB 66 | MET Day 004 | STS ATI | BIAS-XLV-ZVV

CDR KELLY	PLT HOBAUGH	MS1 CALDWELL	Notes
SPEGIS CANISTER ACT (PL OPS, MERLIN/SPEGIS)	ROBO: 1.230 SSRMS WALKOFF PDGF1 TO LAB PDGF Lab PDGF Grapple, Steps 1-5		
EVA PROCEDURE REVIEW Ref. EVA 2 BRIEFING CARD (EVA, TIMELINES) Ref. MSG 043	EVA PROCEDURE REVIEW Ref. EVA 2 BRIEFING CARD (EVA, TIMELINES) Ref. MSG 043	EVA PROCEDURE REVIEW Ref. EVA 2 BRIEFING CARD (EVA, TIMELINES) Ref. MSG 043	
MERLIN STAT CK (PL OPS,MERLIN/SPEGIS) PRE-SLEEP ACTIVITY (ORB OPS, CREW SYS)	ROBO: 1.230 SSRMS WALKOFF PDGF1 TO LAB PDGF PDGF1 Release & Mnvr to Overnight Park Steps 6-9(end)	PRE-SLEEP ACTIVITY (ORB OPS, CREW SYS)	
PRIVATE MEDICAL CONFERENCE Perform via PRIVATE A/G2 PRE-SLEEP ACTIVITY (ORB OPS, CREW SYS)	PRE-SLEEP ACTIVITY (ORB OPS, CREW SYS)		UPLINK β21 Only Box C2,D5, D15,R1
			UPLINK β21 Only Box C2,D16, R1

NOTE: SLEEP SHIFT 30 MIN EARLIER
WAKEUP @ 4/12:00

STS-118 FD05

GMT Date 08/12 (224) | W | TDRS E | TDRS Z | DORB 7 | DORB 8 | DORB 9 | ORB 64 | ORB 65 | ORB 66 | MET Day 004 | STS ATI

23:00 | 00:00 | 01:00 | 02:00

MET	MS2 MASTRACCHIO	MS3 WILLIAMS	MS4 MORGAN	MS5 DREW	Notes
00:00	PRE-SLEEP ACTIVITY (ORB OPS, CREW SYS)	PRE-SLEEP ACTIVITY (ORB OPS, CREW SYS)	DAILY STS/ISS CREW TRANSFER TAGUP	DAILY STS/ISS CREW TRANSFER TAGUP	
	EVA PROCEDURE REVIEW Ref. EVA 2 BRIEFING CARD (EVA, TIMELINES) Ref. MSG 043	EVA PROCEDURE REVIEW Ref. EVA 2 BRIEFING CARD (EVA, TIMELINES) Ref. MSG 043	EVA PROCEDURE REVIEW Ref. EVA 2 BRIEFING CARD (EVA, TIMELINES) Ref. MSG 043	EVA PROCEDURE REVIEW Ref. EVA 2 BRIEFING CARD (EVA, TIMELINES) Ref. MSG 043	
01:00	PRE-SLEEP ACTIVITY (ORB OPS, CREW SYS)	PRE-SLEEP ACTIVITY (ORB OPS, CREW SYS)	ROBO: 1.230 SSRMS WALKOFF PDGF1 TO LAB PDGF PDGF1 Release & Mnvr to Overnight Park Steps 6-9(end)	PRE-SLEEP ACTIVITY (ORB OPS, CREW SYS)	
			DAILY TRANSFER BRIEFING		
02:00			PRE-SLEEP ACTIVITY (ORB OPS, CREW SYS) SH PRE-SLEEP CONFIG (SH OPS, ON-ORBIT)		
	EVA SYS: 2.305 10.2 PSIA CAMPOUT MASK PREBREATHE Ref. PRE EVA 2 TOOL CONFIG (EVA, TIMELINES) Ref. MSG 039, Item 5	EVA SYS: 2.305 10.2 PSIA CAMPOUT MASK PREBREATHE Ref. PRE EVA 2 TOOL CONFIG (EVA, TIMELINES) Ref. MSG 039, Item 5			
03:00	PRE-SLEEP ACTIVITY (ORB OPS, CREW SYS)	PRE-SLEEP ACTIVITY (ORB OPS, CREW SYS)			
04:00					

BIAS-XLV-ZVV

NOTE: SLEEP SHIFT 30 MIN EARLIER
WAKEUP @ 4/12:00

Good Morning Endeavour!

Yesterday's EVA was outstanding. All of you did such a great job supporting each other!

We're sorry about the Fuel Cell 3 Amps alarm that woke you up last night. With SSPTS on-line, Fuel Cell 3 got cool enough that the sustaining heater turned on, causing the FC amps to drop below the lower limit. We reevaluated all limits to prevent this from happening again.

You'll see in the FD04 MMT Summary (MSG 041) that we've classified the vehicle as "TPS Damaged" for Flight Rule purposes. For reference, we've included an overview of the TPS classification Flight Rules in MSG 047. The bottom line is that we currently consider the Orbiter safe to enter with the existing tile damage in the event of an emergency deorbit, but would want to hold off on NPLS if time was available for further discussion. Obviously we'll be reevaluating the TPS classification after we get the results of today's Focused Inspection.

Charlie, we appreciate your offer to be available during the Focused Inspection activity. The SSRMS cameras will be set up before the start of the Focused Inspection and it is not anticipated that the view will need to be changed. You have been left on the timeline for some transfer support but we are very happy to make it your call. If you wish to devote all your time during the Focused Inspection activity to supporting it, that will be fine.

You all did great with manual heater ops yesterday. We will be doing manual heater ops again today.

Focus well today!!

YOUR CURRENT ORBIT IS: 186 X 182 NM

<u>NOTAMS:</u>

NOR – NORTHRUP: ALL RWYS ARE RED – WET.
EDW – EDWARDS: RWY 15/33 ELS ONLY. RWY 18L NOT USABLE.
NKT – CHERRY POINT: RWY 14R/32L CLOSED 13 AUG TO 16 SEP.
MRN – CLOSED TO DOD OPERATIONS 1900Z TO 0259Z DAILY.
ZZA – ZARAGOZA: FIRST 600 METERS OF RWY 30L NOT AVAILABLE 0600Z-1800Z DAILY.
WAK – WAKE ISLAND: CLOSED DUE TO RECONSTRUCTION.
YYR – GOOSE BAY: RWY 08/26 CLOSED. 16/34 AVAILABLE.
IKF – KEFLAVIK: NO AGREEMENT FOR USE.
AWG – RIO GALLEGOS: NO AGREEMENT FOR USE.

<u>NEXT 2 PLS OPPORTUNITIES:</u>

EDW22 ORB 64 – 4/00:29 (FEW080 220/14P24)
EDW22 ORB 79 – 4/23:16 (FEW120 SCT250 220/12P19; 2ND OPP: SCT250 220/14P24)

OMS TANK FAIL CAPABILITY:

L OMS FAIL: YES (SHALLOW TARGETS)
R OMS FAIL: YES (SHALLOW TARGETS)

LEAKING OMS PRPLT BURN:

L OMS LEAK: BURN OUT-OF-PLANE AN+78 <= TIG <= AN+30
OTHERWISE BURN RETROGRADE
R OMS LEAK: BURN OUT-OF-PLANE AN+79 <= TIG <= AN+30
OTHERWISE BURN RETROGRADE

OMS QUANTITIES(%)

L OMS	OX = 45.9	R OMS	OX = 44.9
	FU = 46.0		FU = 44.9

SUBTRACT I'CNCT COUNTER FOR CURRENT OMS QUANTITIES

DELTA V AVAILABLE:

OMS	437 FPS
ARCS (TOTAL ABOVE QTY1)	37 FPS
TOTAL IN THE AFT	474 FPS
ARCS (TOTAL ABOVE QTY2)	66 FPS
FRCS (ABOVE QTY 1)	34 FPS
AFT QTY 1	84 %
AFT QTY 2	46 %

THERE ARE NO FAILURE/IMPACT/WORK AROUNDS FOR TODAY.

Good morning Barb, Al & Dave,

Wonderful work on transfer yesterday! You are well ahead of our expectations. You are approximately 11% complete with SH transfers and 40% complete with MDDK transfers. We have a few questions below regarding your second calldown last night. The only updates for the Transfer List today are Pen and Inks to some MDDK return locations.

For STS, the Transfer List Excel file, FD05_TransferList_STS118.xls, is located on the KFX machine in **C:\OCA-up\transfer**.

For ISS, the Transfer List Excel file, FD05_TransferList_STS118.xls, is located in **K:\OCA-up\transfer**.

Q&As:

Q: Item 9 (IVA Pin Kit): You called down that Scorch stowed this kit in the **0.5** CTB in NOD1O4_D1. The final location on the TL is inside the **1.0** CTB (s/n 1096) in the same location. Please confirm if this kit was stowed in 0.5 CTB (s/n 1202) or in 1.0 CTB (s/n 1096), so we can verify the ISO team get the correct info for IMS. Thanks very much.

Q: 5MLE Bag at AP01: You called down that items 115, 116, 118, and 119 were complete. Did you also complete items 113, 114 and 117 from inside this 5MLE bag?

Q: Item 122.2 through 122.5 (scopemeter and accessories): You called down that item 122.1 (wrenches) was complete, but not the remaining scopemeter items in item 122 ziplock. Please confirm if items 122.2 through 122.5 are complete.

Q: Item 800 (Pliers): We forgot to ask you about these, but we think Clay called them down as complete early yesterday. We also think he may have returned the old Pliers (item 720). Please confirm that these transfers are complete.

A: Item 431 (IVA Tools): You called down that this item was temp stowed in SH with all contents packed in it. We are not showing this item as complete because we are maintaining time to strap it down in SH in its return location.

For today - FD05 Choreography

Middeck

- Item 717 (Dave): Stow PMDIS CD from Dave/Alvin's PMDIS activities for return in MDDK

Spacehab

- Items 183-190: Transfer SF Rack Front items to ISS
  - Install ANITA locker insert; pack 3.0 CTB for return and temp stow.
  - Install ISIS dwr (save foam for returning dwr); add returning dwr/foam to prepack bag.
  - Transfer TVIS Skirt to ISS for FD5 R&R
- Item 103: Transfer CTB from AC04 to ISS

- Items 124-126: (Dave) Move 5MLE launched at AS01 to AC01 and transfer contents to ISS
  - OSE for OSE Config on FD7 (for EVA 4)
  - Banisters (foam will be stowed in AP04 5MLE with IELK)
- Items 127-129: (Dave) Move 5MLE launched at AS03 to AS01 and transfer contents to ISS
  - OSE for OSE Config on FD7 (for EVA 4)
  - Banisters (foam will be stowed in AP04 5MLE with IELK)
- Item 434.31 (Fyodor): Pack old TVIS skirt for return after TVIS Skirt R&R
- Item 123 (Rick or Dave): Transfer new SAFER to ISS for checkout
- Item 746 (Scott): Transfer old SAFER to SH during checkout

<u>Please update the Middeck Transfer List as follows:</u>

In **RETURN** tab:
Make Pen and Ink update to following pages:

- Return Page 2, Item 424: Update 'Stowage at Undock' to read: 'MD FLOOR PORT 1 (Bag A)'
- Return Page 4, Item 701: Update 'Stowage at Undock' to read: 'MD FLOOR STBD 1 (Bag C)'
- Return Page 5, Item 714: Update 'Stowage at Undock' to read: 'MD FLOOR STBD 1 (Bag C)'
- Return Page 6, Item 715: Update 'Stowage at Undock' to read: 'MD CEIL STBD 1 (Bag G)'

<u>For tomorrow - FD06 Choreography</u>
Middeck

- Items 12, 26: Unpack remaining items from 5MLE Bag A (MD FLOOR PORT 1)
  - Item 12: (Fyodor) Transfer 1.0 CTB of PBAs/QDMs and swap with ISS PBA/QDMs
  - Item 26: (Fyodor) Transfer 0.5 CTB of QDMs and swap with ISS QDMs
- Items 401.14-401.17 (Oleg): Pack CHeCS water samples into Return Bag 401 after WATER COLLECT activity

Spacehab

- Item 627: Pack 5MLE launched at AP04 with IELK; strap at AP04
  - Add foam (2) from banisters in 5MLE bags
- Items 632-633: Pack 5MLE launched at AP01 with coldbags; temp stow for return at AS01
- Items 152-158: Begin transferring PF/MESS rack contents to ISS
  - Transfer Scratch pane in Lab for FD7 R&R
  - Transfer WETA to Node for FD9 WETA Alignment Guide Reclocking prior to EVA4

Let us know if you have questions.

- The Transfer Team

Rick, Dave, Tracy, and Clay,
Great job on EVA 1! We have a couple of last minute notes and reminders prior to EVA2 tomorrow. See below for EVA 2 tool config and procedure deltas:

1. Due to the ungrounded connector issue, we need to power down SSPTS while Rick translates by the free-floating connectors (Lab forward). Please add the following to your EVA 2 Procedures:

EVA C/L FS, TIMELINES, EVA 2

Page FS 7-55:
In IV column, prior to EV1 step 3, add the following step:
IV: Verify with MCC SSPTS cable inhibits are in place

Page FS 7-56:
In IV column, after step 27, add the following step:
IV: Give MCC GO to power up SSPTS cables

2. For Dave's PGT (S/N 1001) with the loose programming cap:

The programming cap is fully captive and will not back all the way out. It is *not* required to be torqued back down. However, if you want to torque it back down, perform the following steps:

A. Retrieve PGT RS422 programming cable from: A/L1O0 (behind closeout); 1.0 CTB, s/n:1161
B. Using 3/32" wrench attached to RS422 cable, gently tighten programming cap down (do *not* overtorque)

Another option is to make this PGT your spare PGT and put it in the Staging Bag. Please let us know which option you choose.

3. Please relocate the S5 launch locks from the Staging Bag to the "EVA Tools 2" mesh bag prior to EVA 2.

4. During EVA 2 tool config, please report the PGT S/N and the PGT battery S/N each EV will use (same info for spare PGT).

OBJECTIVE:
To switch mated stack attitude control responsibility from Orbiter to ISS Control Moment Gyroscopes without RS SMTC computers.

1. GNC COMMAND RESPONSE COUNTERS RESET

PCS MCG: GNC Command Response Counters
GNC Command Response Counters

sel Reset

Verify the Since Reset column values are all blank.

Do not close this window until the procedure is complete.

If while executing a command, the Command Accept counter on that display does not increment
Reselect GNC Command Response Counters to determine if a command was rejected.

√**MCC-H**

2. VERIFYING INITIAL ATTITUDE CONTROL CONFIGURATION – FREE DRIFT

PCS MCG: MCS Configuration
MCS Configuration
'MCS Moding'

Verify US GNC Mode – Drift (UDG)

'MCS ORU Status'

Verify Min ORUs Avail – Yes

'Data Source and Quality'

Verify the following information

	US Quality
Attitude	Valid (Valid RS) (Degraded)
Rate	Valid (Valid RS) (Degraded)
State Vector	Valid (Valid RS) (Degraded)

3. DETERMINING REQUIRED CCDB INFORMATION

The following information required for attitude control handover will be determined from OSTP or **MCC-H**.

Commanded CMG IG/OG Angles
Record CMG 1 IG/OG Angles, deg: _____ /_____
Record CMG 2 IG/OG Angles, deg: _____ /_____
Record CMG 3 IG/OG Angles, deg: _____ /_____
Record CMG 4 IG/OG Angles, deg: _____ /_____

Record CMG 2 expected IG/OG Current Angle F/W, deg _____ /_____

If this information is not recorded elsewhere, record it below

	Attitude Hold	Mom Mgmt
US Take Cntl CCDB ID:	[X]	[Y]
Version ID:		
Cmd Att, deg Y:		
Cmd Att, deg P:		
Cmd Att, deg R:		

Record LVLH Rate limit: _____ deg/s

Record Momentum Command for Control: X Axis: _____ N-m-s
Record Momentum Command for Control: Y Axis: _____ N-m-s
Record Momentum Command for Control: Z Axis: _____ N-m-s

4. POSITIONING CMG GIMBALS
   MCG: CMG Configuration: Gimbal Angles
   CMG Gimbal Angles

   If CMG 1(3,4) IG,OG Current Angle S/W, deg and CMG 2 expected
   IG,OG Current Angle F/W, deg are not as recorded in step 3
   Perform {2.207 CMG GIMBAL ANGLE POSITIONING}, all
   (SODF: MCS: NOMINAL: CMGS), then:

5. CHECKING USOS SOLAR ARRAYS ARE CONFIGURED
   If ground is performing
   Coordinate with Phalcon to check that USOS Solar Array Wing configuration is acceptable for the upcoming attitude control configuration.

   If crew is performing

   √**MCC-H**

6. REMOVING INHIBITS TO ENABLE MODING

   MCG: MCS Configuration: MCS Inhibits
   MCS Inhibits

   cmd Mode Transition Enable (Verify – Ena)
   cmd Attitude Maneuver Enable (Verify – Ena)

   √ Desat Request – Inh
   √ Att Cntl Shutdown – Inh
   √ UDG Shutdown – Inh
   √ Auto Att Control Handover to RS - Inh

   ISS**(MCC-H)** ⇒ Orbiter, “ISS ready for Orbiter rate damping and Free Drift.”

7. SET-UP ORBITER FOR MANUAL RATE DAMPING

CAUTION
The active DAP will be modified in the following steps. Incorrect entries could result in DAP instabilities.

GNC UNIV PTG
√ ERR TOT – ITEM 23 "*"

GNC 20 DAP CONFIG
√DAP: A12/AUTO/VERN
O14,O15, O16 cb DDU L(R) (four) – cl

Update DAP to collapse attitude deadbands
GNC 20 DAP CONFIG
ITEM 24+1 EXEC

Wait for DAP to Stabilize (~1 min), verify with MCC-H.

Update DAP to collapse attitude deadbands further
GNC 20 DAP CONFIG
ITEM 24+0.5 EXEC

Wait for DAP to Stabilize (~3 min), verify with MCC-H.

8. ORBITER RATE DAMPING

NOTE:

1. When manually damping rates perform one RHC Pulse input at a time. Use a minimum of 5 second spacing for all following RHC inputs. It is recommended that the Pitch axis be corrected first which responds fairly independent of Roll and Yaw. After Pitch is cleaned up, Roll should be targeted with some expected cross coupling into Yaw. Yaw should then be cleaned up and significant cross coupling back to Roll should be expected. Due to cross coupling, Roll and Yaw rate matching will be iterative. Once Roll and Yaw are at the desired rates, Pitch should again be cleaned up if required.
2. Attitude Errors need to remain less than 1 degree. If attitude maintenance is required, perform step 9 before returning the DAP to AUTO, then return to the beginning of step 7.

Shuttle MCC-H ⇒ Orbiter, "Ready for Shuttle to begin manual rate damping"

F6/ F8 FLT CNTRL PWR - ON
DAP: A/FREE/VERN

GNC UNIV PTG

		√MCC for updates	
Desired UNIV PTG rates:	Roll	0.000	_ . _ _ _
	Pitch	+0.067	_ . _ _ _
	Yaw	0.000	_ . _ _ _

RHC: Perform PITCH Pulse inputs as required to establish desired pitch rate

RHC: Perform ROLL Pulse inputs as required to establish desired roll rate

RHC: Perform YAW Pulse as required to establish desired yaw rate
Iterate back to Roll then Yaw as required to achieve desired rates

If needed: Perform PITCH Pulse inputs again to establish desired pitch rate

When desired rates are achieved in all axes:
F6/F8 FLT CNTRL PWR - OFF

Orbiter ⇒ ISS (**MCC-H),** "Orbiter ready for ISS to control the mated stack."

9. RECONFIGURE DAP TO NOMINAL A12

ISS**(MCC-H)** ⇒ Orbiter, "ISS is attempting to establish attitude control."

Once ISS has attempted to take attitude control:
Reload DAP A12:
GNC 20 DAP CONFIG

ITEM 1+12 EXEC

PCS 10. INITIATING ORBITER TO U.S. ATTITUDE CONTROL HANDOVER

NOTE

1. The following commands in this step should be sent as soon as possible following the Orbiter call that they're ready for ISS control (step 8).

2. If the US Take Control Unconditional command is not sent within 60 seconds of verification of US Take Attitude Control Enable, the US Take Attitude Control parameter will be reset back to Inhibit. In this case, this step would need to be repeated (commanding US Take Attitude Control Enable followed by the US Take Control Unconditional command).

The second command in this step (US Take Control Unconditional) must be sent within 60 seconds of US Take Attitude Control Enable verification.

MCG: MCS Configuration: Off Nominal RS to US
Off Nominal RS to US

cmd US Take Att Cntl Enable – (Verify - Ena)

input Attitude Hold US Take Cntl CCDB ID - (from step 3)
input Attitude Hold US Take Cntl Ref Frame - LVLH

cmd Initiate Handover - Set

Verify US Take Cntl Cmd Response – Accepted

Verify Active CCDB Source Slot – as commanded
Verify US GNC Mode – CMG Only

11. INITIATING MOMENTUM MANAGEMENT CONTROLLER

MCG: MCS Configuration
MCS Configuration
'CCDB Slots'

For Momentum Management CCDB ID, Slot [Y] from step 3
Sel Make Active [Y]
Make Active [Y]

NOTE
It may require an orbit or more for attitude error and attitude rate transients to stabilize after the Momentum Management CCDB is incorporated.

cmd Incorporate
'Active CCDB'
Verify Active CCDB Source Slot – as commanded

If the Momentum Command for Control is to be sent per step 3
MCG: MCS Configuration: Active CCDB
Active CCDB
'Momentum Command for Control'

input X Axis – _____ (from step 3)
input Y Axis – _____ (from step 3)
input Z Axis – _____ (from step 3)

cmd Set Momentum

Verify X Axis – as commanded
Verify Y Axis – as commanded
Verify Z Axis – as commanded

ISS (**MCC-H**) ⇒ Orbiter, "ISS has assumed attitude control."
ISS (**MCC-H**) ⇒ **MCC-M**, "ISS has assumed attitude control."

```
| ***********************************************************************************************
*   If "Loss of CMG Attitude Control" Warning is in Alarm,
*   |
*   |   Shuttle crew will regain control of the mated stack with the following steps
*   |     √DAP: A12/FREE/VERN
*   |     DAP: A12/LVLH/VERN
*   |     Once Rates Damped (<0.1), DAP: FREE>2 sec, Then DAP:AUTO
*   |
*   |   MCC-H: Perform {3.202  RECOVERY OF US GNC FUNCTIONALITY}, all
*   |   (SODF: MCS: MALFUNCTION: ATTITUDE CONTROL), then:
*   |
*   |     Go to step 13.

***********************************************************************************************
```

12. REPLACING US GNC INHIBITS TO PREVENT MODING

    MCG: MCS Configuration: MCS Inhibits
    MCS Inhibits

    cmd Mode Transition Inhibit (Verify – Inh)
    cmd Attitude Maneuver Inhibit (Verify – Inh)

13. RETURNING ORBITER TO NOMINAL CONFIGURATION

O14, O15, O16 cb DDU L(R) (four) – op

The following procedure contains steps to reconfigure and deconfigure the Spacehab PGSC for use during the focused inspection.

1. A31p LAPTOP SETUP

a. Perform SUBSYSTEM PGSC DEACT (SH OPS, ON-ORBIT) steps 1-7, 10, 12, 13 and 16.
b. Relocate PGSC and Power Supply to flight deck.
c. Locate Pre-routed Pilot DC Pwr Cable plugged into MO63P J4.
d. Connect Pilot DC Pwr Cable P1 to A31P 28 VDC Pwr Supply J1.
e. Power up PGSC as reqd.
f. Configure SpaceHab A31p for obtaining camera views from ISS:
A31p VIDEO CONVERTER
(PHOTO/TV, PORTABLE MONITORS)
Note: In step 3, connect VPU Patch Cable to the "FROM" (bottom) side of the ISS PORT.
Reference drawing on page 9-6. Hardware is located in the A17 DTV Bag.
g. R12 Temp stow the ISS Blue Jumper on the VPU.

2. A31p LAPTOP TEARDOWN

a. Power down PGSC.
b. R12 Remove SpaceHab A31p VPU Patch Cable from VPU "FROM" (bottom) side of the ISS Port.
c. Disconnect Pre-routed Pilot DC Pwr Cable P1 from A31P 28 VDC Pwr Supply J1.
d. Relocate PGSC and Power Supply to SHAB module.
e. Perform SUBSYSTEM PGSC ACT (SH OPS, ON-ORBIT) steps 4 and 9-17.
f. R12 (VPU) – Green Jumper - ISS.
g. Stow VPU Patch Cable, Bal/Unbal Xfmr, and AVIU-CC Video Cable in Photo/TV A17 DTV Bag.

FD5 FOCUSED INSPECTION

CAUTION
Prior to OBSS ops, SSRMS must be based on WS4 MBS PDGF 1 at Survey Support Viewing posn (SR: -155.8, SY: +163.3, SP: +204.7, EP: -43.1, WP: -158.8, WY: -51.3, WR: +51.2). Assumed RMS starting config is OBSS Handoff posn

1. SETUP

Verify A31p Laptop Setup for ISS Camera Views complete (ref. MSG 45)

Mon 1	Elbow
Dwnlnk	A
Mon 2	B
DTV	RSC
A31p	P1 LOOB (Tip Elbow)

SM 94 PDRS CONTROL
√PL ID, ITEM 3: 2
√INIT ID, ITEM 24: 2

OBSS HANDOFF POSN:

	X	Y	Z	PITCH	YAW	ROLL	PLID	
√	-1030	+492	-526	2	270	348	2	*
	SY	SP	EP	WP	WY	WR		
√	-9.2	+73.5	-94.3	-57.7	+21.0	-65.7		

*display singularity

NOTE
1. All scans are performed using IDC and LCS
2. LDRI is used for illumination and recorded for additional data

Perform LCC ACTIVATION (LCS Cue Card, PHOTO/TV) steps 3 and 4
Perform IDC SOFTWARE ACTIVATION (IDC Cue Card, PHOTO/TV) steps 1 & 2

R12 (VPU) √Green Jumper – LDRI/ITVC

2. <u>SCAN 1 POSITION 1 (MAIN LANDING GEAR DOOR THERMAL BARRIER) (IDC AND LCS)</u>

RHC RATE – VERN (RATE MIN tb-ON)

BRAKES – OFF (tb-OFF)
MODE – SINGLE, ENTER

Mnvr to SCAN 1 POSN 1 posn:

	SY	SP	EP	WP	WY	WR	
OBSS Handoff	-9.2	+73.5	-94.3	-57.7	+21.0	-65.7	
1: WP +				+20.0			
2: WR +						-20.0	
3: SY +	+68.4						
4: SP –		+45.1					
5: EP –			-106.0				
6: WP –				-14.9			
7: WR –						-112.6	
8: WY –					+12.3		
Scan 1 Posn 1	+68.4	+45.1	-106.0	-14.9	+12.3	-112.6	
	X	Y	Z	PITCH	YAW	ROLL	PL ID
	-1055	+166	-194	357	296	4	2

BRAKES – ON (tb-ON)

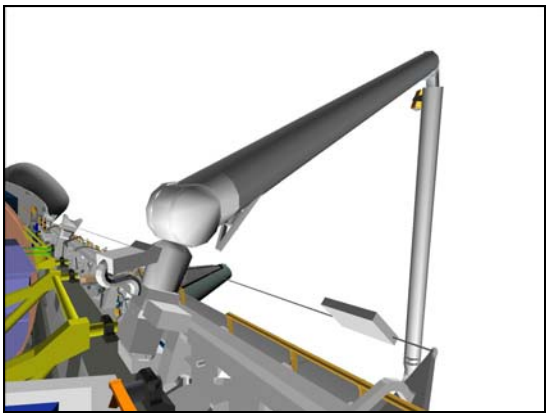

CCTV A (35,0)

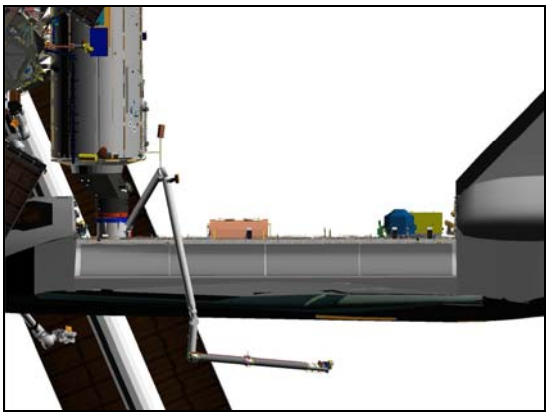

BIRD'S EYE

RSC

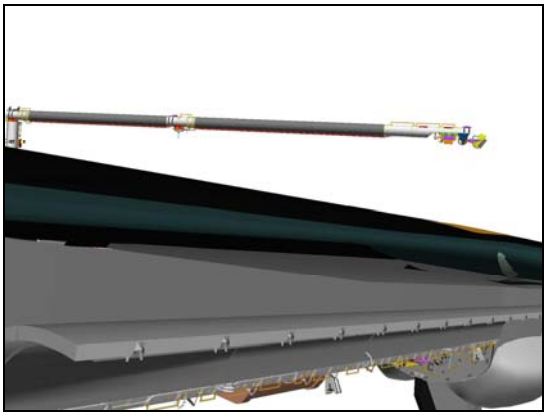

TIP ELBOW (-115,55)

MAIN LANDING GEAR DOOR THERMAL BARRIER

2.1 <u>LDRI SETUP</u>
Wait 90 seconds after “BRAKES - ON”, then:

A7U	VIDEO OUT MUX 1 L pb		– push (MIDDECK lt on)
	LDRI MODE 6 pb		– push (flickering LDRI video)
	VIDEO OUT MON2 pb		– push
	IN PL2(VPU) pb		– push
	CAMR CMD	PAN/TILT	– HI RATE
		PAN	– L (to hard stop)
		TILT	– UP (to hard stop)
		PAN/TILT	– RESET, HI RATE (LO within 10º)
		PAN: +81	
		TILT: -56	

√MCC for correct AOI in FOV
VIDEO OUT – not MON 2

L10(VTR) REC pb – push, hold
PLAY pb – push, simo (red ●)

2.2 LCS SCAN

C3 S-BAND PM ANT – UL FWD
A1R FM ANT – XMIT UPPER/RCVR LOWER

LCC/ 'Scanning' 'Quick View Scan'
A31p sel – Quick View 4
cmd Start Quick View (Verify Scan Status: Complete)

√MCC for correct AOI in FOV

'Scanning' 'Detailed Area Scan'
sel –Area Scan 16
cmd Start Area Scan (Verify Scan Status: Complete)
'Scanning' 'Detailed Area Scan'
sel – Area Scan 17
cmd Start Area Scan (Verify Scan Status: Complete)
'Scanning' 'Detailed Area Scan'
sel – Area Scan 19
cmd Start Area Scan (Verify Scan Status: Complete)

C3 S-BAND PM ANT – GPC

2.3 IDC SCAN

NOTE
If GMT does not update during Ops, an attempt to shut down/restart A31p should be made. Restarting the A31p may require LCH power cycle.

Perform IDC SOFTWARE ACTIVATION (IDC Cue Card, PHOTO/TV) step 3

Perform OPERATION (IDC Cue Card, PHOTO/TV) step 2
√MCC for AOI FOV prior to 'Scan Hi-Res'

Perform OPERATION (IDC Cue Card, PHOTO/TV) step 3
Use "Black Tile – Day" or "Black Tile – Night" per real-time environment

Perform OPERATION (IDC Cue Card, PHOTO/TV) step 2
DO NOT "sel 'Stop Scan'"

3. SCAN 1 POSITION 2 (MAIN LANDING GEAR DOOR THERMAL BARRIER) (IDC AND LCS)

Mon 1	Elbow
Dwnlnk	A
Mon 2	B
DTV	RSC
A31p	Tip Elbow (P1 LOOB)

On MCC GO,

SM 94 PDRS CONTROL
END POS – ITEM 18 -1 0 6 9 +1 6 2 -1 9 6 EXEC
ATT – ITEM 21 +5 +2 9 6 +0 EXEC
CMD CK – ITEM 25 EXEC (GOOD)

BRAKES – OFF (tb-OFF)
MODE – OPR CMD, ENTER (READY lt on)

After PROCEED, if motion no longer apparent but POR is within 1 in/1 deg and IN PROG lt - on:
AUTO SEQ – STOP

AUTO SEQ – PROCEED (IN PROG lt on)

When AUTO SEQ IN PROG lt – off:
BRAKES – ON (tb-ON)

SCAN 1 POSN 2:

	X	Y	Z	PITCH	YAW	ROLL	PL ID
√	-1069	+162	-196	5	296	0	2
	SY	SP	EP	WP	WY	WR	
√	+68.4	+37.5	-100.5	-7.1	+2.4	-113.7	

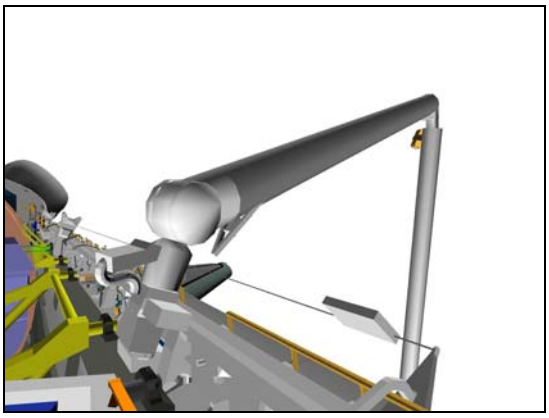
CCTV A (35,0)

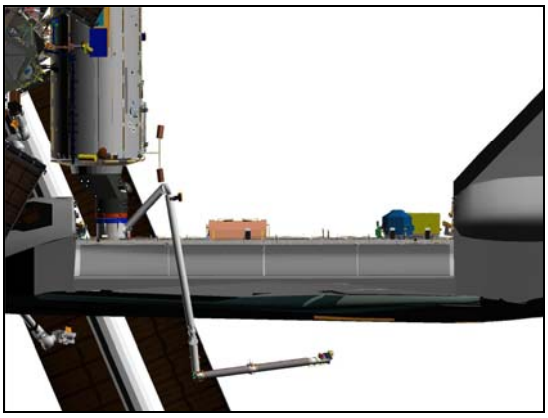
BIRD'S EYE

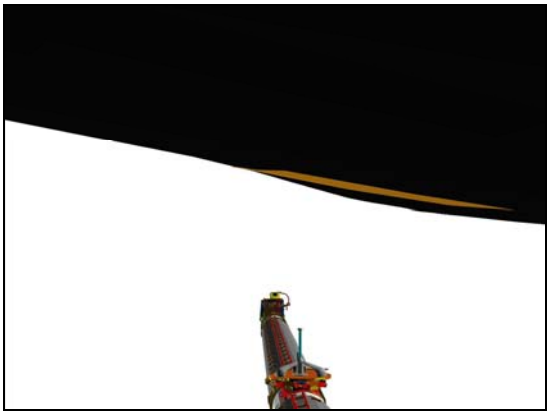

RSC

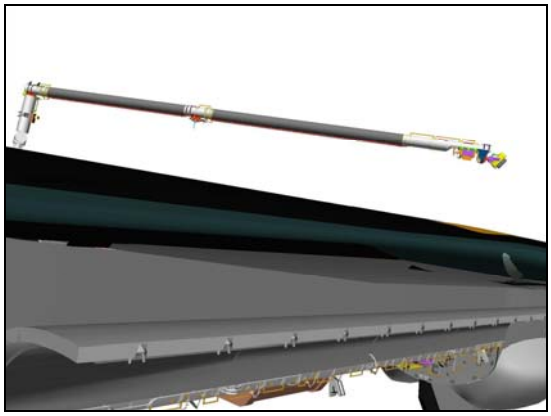

TIP ELBOW (-115,55)

3.1 <u>LDRI SETUP</u>
Wait 90 seconds after “BRAKES - ON”, then:

A7U VIDEO OUT MON2 pb – push
IN PL2(VPU) pb – push
CAMR CMD PAN: +81
TILT: -56
PAN/TILT to view area of interest.

√MCC for correct AOI in FOV
VIDEO OUT – not MON 2

3.2 <u>IDC SCAN</u>

<u>NOTE</u>

If GMT does not update during Ops, an attempt to shut down/restart A31p should be made. Restarting the A31p may require LCH power cycle.

√MCC for AOI in FOV prior to ‘Stop Scan’

A31P sel ‘Stop Scan’

Perform OPERATION (<u>IDC</u> Cue Card, PHOTO/TV) step 3
Use “Black Tile – Day” or “Black Tile – Night” per real-time environment

A31p Sel ‘Power off’ on IDC GUI

L10(VTR) STOP pb – push (no red ●)

3.3 LCS SCAN

C3 S-BAND PM ANT – UL FWD

LCC/ A31p
'Scanning' 'Detailed Area Scan'
sel –Area Scan 16
cmd Start Area Scan (Verify Scan Status: Complete)
'Scanning' 'Detailed Area Scan'
sel – Area Scan 17
cmd Start Area Scan (Verify Scan Status: Complete)
'Scanning' 'Detailed Area Scan'
sel – Area Scan 19
cmd Start Area Scan (Verify Scan Status: Complete)

sel – File
cmd Close All

C3 S-BAND PM ANT – GPC

4. SCAN 2 POSITION 1 (LARGE MULTIPLE TILE DAMAGE) (IDC AND LCS)

On MCC GO,

BRAKES – OFF (tb-OFF)
MODE –SINGLE, ENTER

Mnvr to SCAN 1 POSN 2 BACKOFF posn:

	SY	SP	EP	WP	WY	WR	
Scan 1 Posn 2	+68.4	+37.5	-100.5	-7.1	+2.4	-113.7	
1: WY +					+12.0		
Scan 1 Posn 2 Backoff	+68.4	+37.5	-100.5	-7.1	+12.0	-113.7	
	X	Y	Z	PITCH	YAW	ROLL	PL ID
	-1060	+157	-125	349	296	353	2

BRAKES – ON (tb-ON)

SM 94 PDRS CONTROL
END POS – ITEM 18 -1 2 5 5 +1 2 3 -4 3 EXEC
ATT – ITEM 21 +3 3 4 +3 1 1 +3 4 3 EXEC
CMD CK – ITEM 25 EXEC (GOOD)

BRAKES – OFF (tb-OFF)
MODE – OPR CMD, ENTER (READY lt on)

After PROCEED, if motion no longer apparent but POR is within 1 in/1 deg and IN PROG lt - on:
AUTO SEQ – STOP

AUTO SEQ – PROCEED (IN PROG lt on)

When AUTO SEQ IN PROG lt – off:

	X	Y	Z	PITCH	YAW	ROLL	PL ID
√	-1255	+123	-43	334	311	343	2
	SY	SP	EP	WP	WY	WR	
√	+46.3	+40.0	-99.7	-16.3	+30.3	-79.3	

MODE – SINGLE, ENTER

Mnvr to SCAN 2 POSN 1 posn:

	SY	SP	EP	WP	WY	WR	
Scan 2 Posn 1 Backoff	+46.3	+40.0	-99.7	-16.3	+30.3	-79.3	
1: WY –					+16.1		
Scan 2 Posn 1	+46.3	+40.0	-99.7	-16.3	+16.1	-79.3	
	X	Y	Z	PITCH	YAW	ROLL	PL ID
	-1285	+148	-183	356	309	357	2

BRAKES – ON (tb-ON)

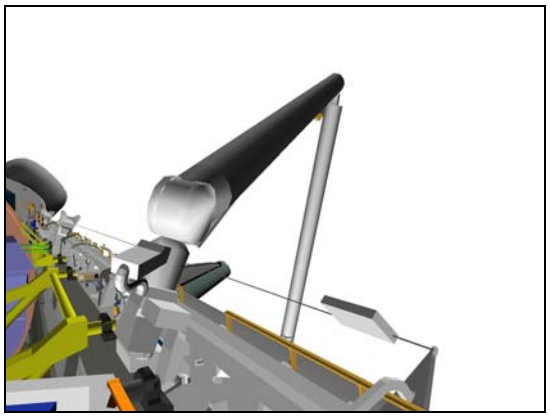

CCTV A (35,0)

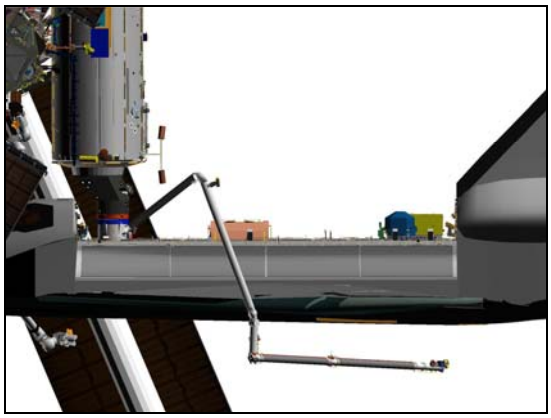

BIRD'S EYE

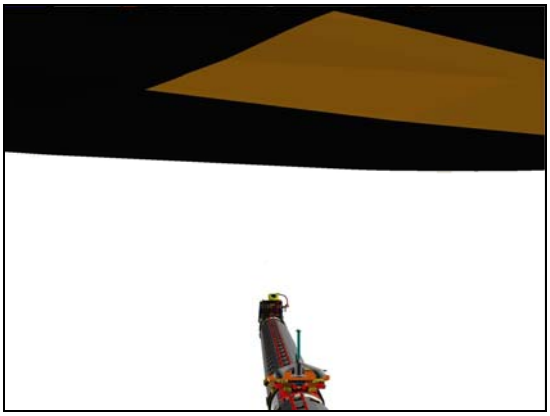

RSC

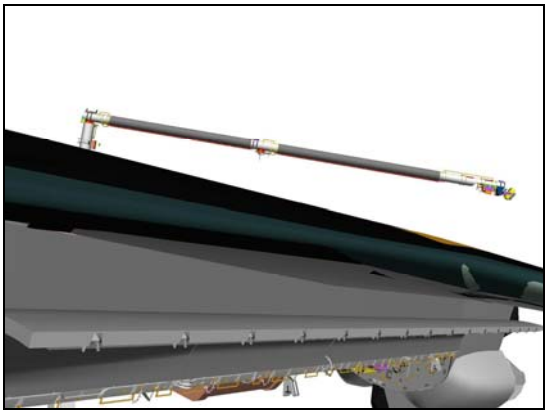

TIP ELBOW (-110,55)

LARGE MULTIPLE TILE DAMAGE

4.1 <u>LDRI SETUP</u>
Wait 90 seconds after “BRAKES - ON”, then:

A7U VIDEO OUT MON2 pb – push
IN PL2(VPU) pb – push
CAMR CMD PAN: +81
TILT: -56
PAN/TILT to view area of interest.

√MCC for correct AOI in FOV
VIDEO OUT – not MON 2

L10(VTR) REC pb – push, hold
PLAY pb – push, simo (red ●)

4.2 LCS SCAN

C3 S-BAND PM ANT – UL FWD

LCC/ A31p
'Scanning' 'Quick View Scan'
sel – Quick View 3
cmd Start Quick View (Verify Scan Status: Complete)

√MCC for correct AOI in FOV

'Scanning' 'Detailed Area Scan'
sel –Area Scan 15
cmd Start Area Scan (Verify Scan Status: Complete)
'Scanning' 'Detailed Area Scan'
sel – Area Scan 16
cmd Start Area Scan (Verify Scan Status: Complete)
'Scanning' 'Detailed Area Scan'
sel – Area Scan 18
cmd Start Area Scan (Verify Scan Status: Complete)

C3 S-BAND PM ANT – GPC

4.3 IDC SCAN

NOTE

If GMT does not update during Ops, an attempt to shut down/restart A31p should be made. Restarting the A31p may require LCH power cycle.

Perform IDC SOFTWARE ACTIVATION (IDC Cue Card, PHOTO/TV) step 3

Perform OPERATION (IDC Cue Card, PHOTO/TV) step 2
√MCC for AOI FOV prior to 'Scan Hi-Res'

Perform OPERATION (IDC Cue Card, PHOTO/TV) step 3
Use "Black Tile – Day" or "Black Tile – Night" per real-time environment

Perform OPERATION (IDC Cue Card, PHOTO/TV) step 2
DO NOT "sel 'Stop Scan'"

5. SCAN 2 POSITION 2 (LARGE MULTIPLE TILE DAMAGE) (IDC AND LCS)

On MCC GO,

SM 94 PDRS CONTROL
END POS – ITEM 18 -1 2 9 1 +1 5 1 -1 8 8 EXEC
ATT – ITEM 21 +0 +3 0 5 +3 5 7 EXEC
CMD CK – ITEM 25 EXEC (GOOD)

BRAKES – OFF (tb-OFF)
MODE – OPR CMD, ENTER (READY lt on)

After PROCEED, if motion no longer apparent but POR is within 1 in/1 deg and IN PROG lt - on:
AUTO SEQ – STOP

AUTO SEQ – PROCEED (IN PROG lt on)

When AUTO SEQ IN PROG lt – off:
BRAKES – ON (tb-ON)

SCAN 2 POSN 2:

	X	Y	Z	PITCH	YAW	ROLL	PL ID
√	-1291	+151	-188	0	305	357	2
	SY	SP	EP	WP	WY	WR	
√	+45.7	+32.2	-87.2	-17.8	+12.8	-83.1	

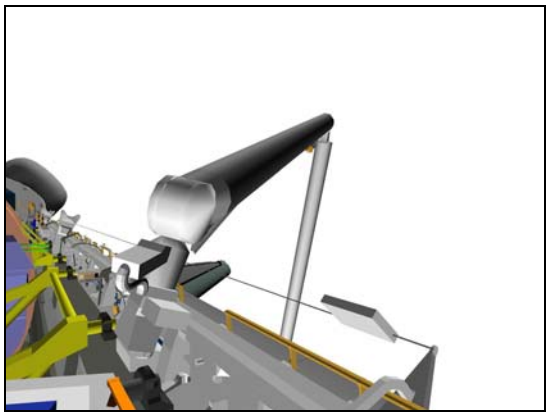

CCTV A (35,0)

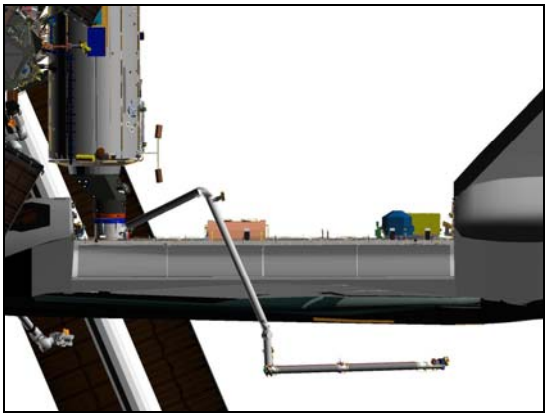

BIRD'S EYE

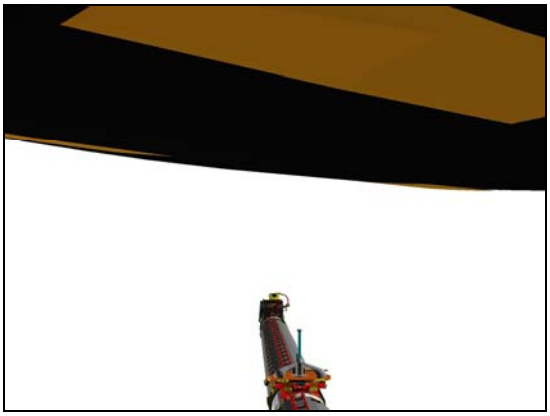

RSC

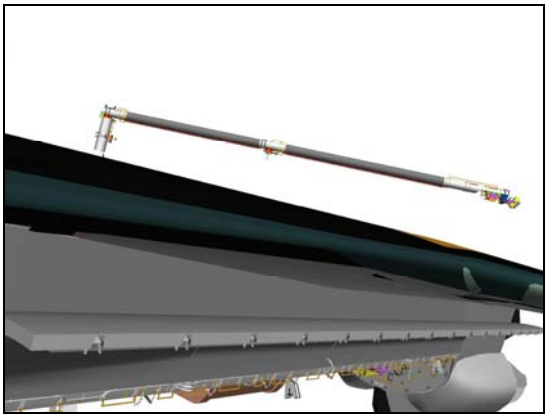

TIP ELBOW (-110,55)

5.1 LDRI SETUP

Wait 90 seconds after “BRAKES - ON”, then:

A7U VIDEO OUT MON2 pb – push
IN PL2(VPU) pb – push
CAMR CMD PAN: +81
TILT: -56
PAN/TILT to view area of interest.

√MCC for correct AOI in FOV
VIDEO OUT – not MON 2

5.2 IDC SCAN

NOTE

If GMT does not update during Ops, an attempt to shut down/restart A31p should be made. Restarting the A31p may require LCH power cycle.

√MCC for AOI in FOV prior to ‘Stop Scan’

A31P sel ‘Stop Scan’

Perform OPERATION (IDC Cue Card, PHOTO/TV) step 3
Use “Black Tile – Day” or “Black Tile – Night” per real-time environment

A31p Sel ‘Power off’ on IDC GUI

L10(VTR) STOP pb – push (no red ●)

5.3 LCS SCAN

C3 S-BAND PM ANT – UL AFT

LCC/ A31p
‘Scanning’ ‘Detailed Area Scan’
sel –Area Scan 15
cmd Start Area Scan (Verify Scan Status: Complete)
‘Scanning’ ‘Detailed Area Scan’
sel – Area Scan 16
cmd Start Area Scan (Verify Scan Status: Complete)
‘Scanning’ ‘Detailed Area Scan’
sel – Area Scan 18
cmd Start Area Scan (Verify Scan Status: Complete)

sel – File
cmd Close All

C3 S-BAND PM ANT – GPC

6. SCAN 3 (TILES DAMAGED JUST AFT OF LARGE DAMAGE SITE AND TILE DAMAGED AFT OF MAIN LANDING GEAR DOOR) (IDC AND LCS)

NOTE

Clearance to Payload Bay Door is approx 56 inches at end of OCAS. This is viewable with the ELBOW camera.

On MCC GO,

SM 94 PDRS CONTROL

END POS – ITEM 18 -1 3 0 7 +1 6 3 -1 9 1 EXEC
ATT – ITEM 21 +4 +3 1 4 +7 EXEC
CMD CK – ITEM 25 EXEC (GOOD)

BRAKES – OFF (tb-OFF)
MODE – OPR CMD, ENTER (READY lt on)

After PROCEED, if motion no longer apparent but POR is within 1 in/1 deg and IN PROG lt - on:
AUTO SEQ – STOP

AUTO SEQ – PROCEED (IN PROG lt on)

When AUTO SEQ IN PROG lt – off:
BRAKES – ON (tb-ON)

SCAN 3 POSN:

	X	Y	Z	PITCH	YAW	ROLL	PL ID
√	-1307	+163	-191	4	314	7	2
	SY	SP	EP	WP	WY	WR	
√	+45.7	+30.6	-102.8	-7.9	+10.9	-72.7	

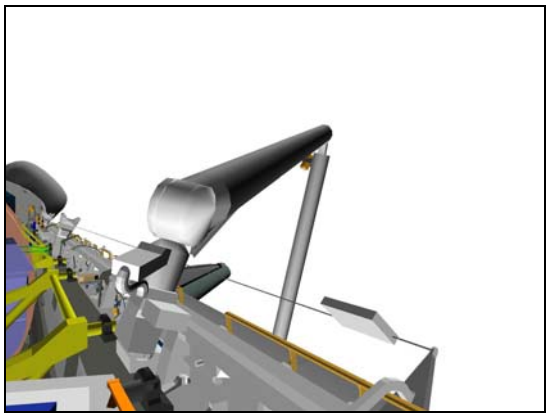

CCTV A (35,0)

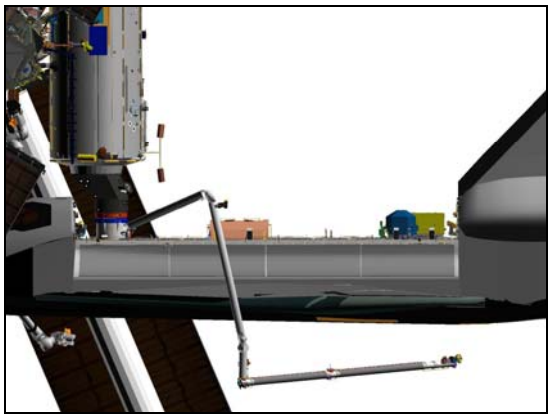

BIRD'S EYE

RCS

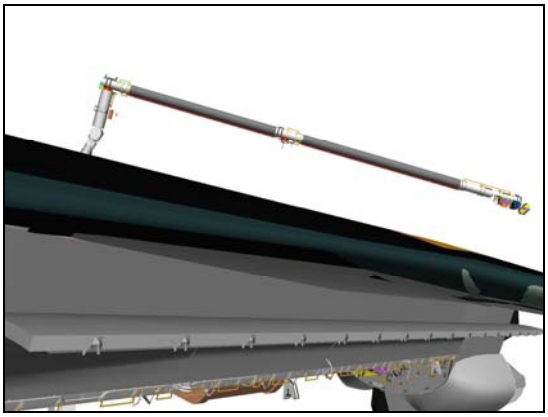

TIP ELBOW (-110,55)

TILES DAMAGED JUST AFT OF LARGE DAMAGE SITE

TILE DAMAGED AFT OF PRIORITY LOCATION 1

6.1 LDRI SETUP

Wait 90 seconds after “BRAKES - ON”, then:

A7U
VIDEO OUT MON2 pb – push
IN PL2(VPU) pb – push
CAMR CMD PAN: +81
TILT: -56
PAN/TILT to view area of interest.

√MCC for correct AOI in FOV
VIDEO OUT – not MON 2

L10(VTR)
REC pb – push, hold
PLAY pb – push, simo (red ●)

6.2 IDC SCAN

NOTE

If GMT does not update during Ops, an attempt to shut down/restart A31p should be made. Restarting the A31p may require LCH power cycle.

Perform IDC SOFTWARE ACTIVATION (IDC Cue Card, PHOTO/TV) step 3

Perform OPERATION (IDC Cue Card, PHOTO/TV) step 2
√MCC for AOI FOV prior to ‘Scan Hi-Res’

Perform OPERATION (IDC Cue Card, PHOTO/TV) step 3
Use “Black Tile – Day” or “Black Tile – Night” per real-time environment

A31p
Sel ‘Power off’ on IDC GUI

6.3 LCS SCAN

C3
S-BAND PM ANT – UL FWD

LCC/
A31p
‘Scanning’ ‘Detailed Area Scan’
sel –Area Scan 15
cmd Start Area Scan (Verify Scan Status: Complete)
‘Scanning’ ‘Detailed Area Scan’
sel – Area Scan 16
cmd Start Area Scan (Verify Scan Status: Complete)
‘Scanning’ ‘Detailed Area Scan’
sel – Area Scan 18
cmd Start Area Scan (Verify Scan Status: Complete)

C3
S-BAND PM ANT – GPC

L10(VTR)
STOP pb – push (no red ●)

7. <u>SCAN 4 (TILE DAMAGED AFT OF MAIN LANDING GEAR DOOR) (IDC AND LCS)</u>

On MCC GO,

SM 94 PDRS CONTROL
END POS – ITEM 18 -1 3 3 6 +1 6 6 -1 9 1 EXEC
ATT – ITEM 21 +5 +3 0 9 +8 EXEC
CMD CK – ITEM 25 EXEC (GOOD)

BRAKES – OFF (tb-OFF)
MODE – OPR CMD, ENTER (READY lt on)

After PROCEED, if motion no longer apparent but POR is within 1 in/1 deg and IN PROG lt - on:
AUTO SEQ – STOP

AUTO SEQ – PROCEED (IN PROG lt on)

When AUTO SEQ IN PROG lt – off:
BRAKES – ON (tb-ON)

SCAN 4 POSN:

	X	Y	Z	PITCH	YAW	ROLL	PL ID
√	-1336	+166	-191	5	309	8	2
	SY	SP	EP	WP	WY	WR	
√	+41.7	+24.9	-83.4	-22.7	+11.6	-73.6	

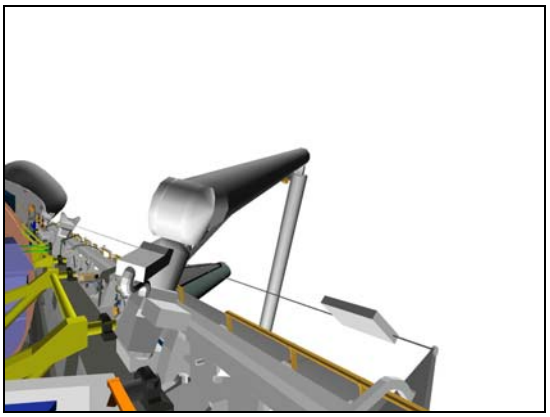

CCTV A (35,0)

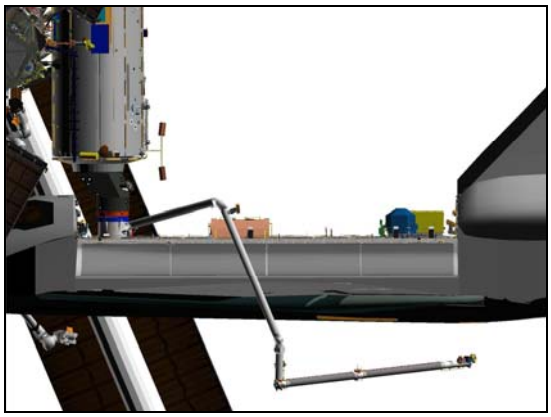

BIRD'S EYE

RSC

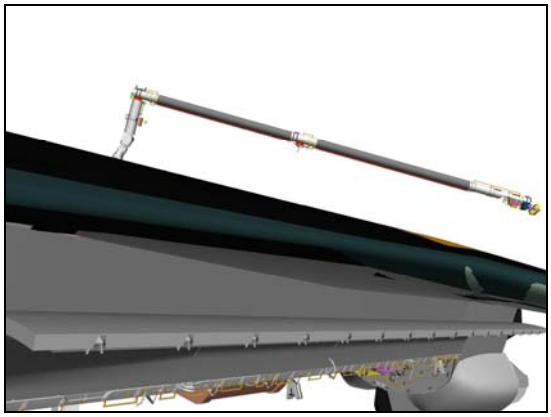

TIP ELBOW (-110,55)

TILE DAMAGED AFT OF PRIORITY LOCATION 1

7.1 <u>LDRI SETUP</u>
Wait 90 seconds after “BRAKES - ON”, then:

A7U VIDEO OUT MON2 pb – push
IN PL2(VPU) pb – push
CAMR CMD PAN: +81
TILT: -56
PAN/TILT to view area of interest.

√MCC for correct AOI in FOV
VIDEO OUT – not MON 2

L10(VTR) REC pb – push, hold
PLAY pb – push, simo (red ●)

7.2 IDC SCAN

NOTE

If GMT does not update during Ops, an attempt to shut down/restart A31p should be made. Restarting the A31p may require LCH power cycle.

Perform IDC SOFTWARE ACTIVATION (IDC Cue Card, PHOTO/TV) step 3

Perform OPERATION (IDC Cue Card, PHOTO/TV) step 2
√MCC for AOI FOV prior to 'Scan Hi-Res'

Perform OPERATION (IDC Cue Card, PHOTO/TV) step 3
Use "Black Tile – Day" or "Black Tile – Night" per real-time environment

A31p Sel 'Power off' on IDC GUI

L10(VTR) STOP pb – push (no red ●)

7.3 LCS SCAN

C3 S-BAND PM ANT – UL FWD

LCC/ 'Scanning' 'Detailed Area Scan'
A31p sel –Area Scan 15
cmd Start Area Scan (Verify Scan Status: Complete)
'Scanning' 'Detailed Area Scan'
sel – Area Scan 16
cmd Start Area Scan (Verify Scan Status: Complete)
'Scanning' 'Detailed Area Scan'
sel – Area Scan 18
cmd Start Area Scan (Verify Scan Status: Complete)

sel – File
cmd Close All

C3 S-BAND PM ANT – GPC
A1R FM ANT – GPC

7.4 LDRI DEACTIVATION

A7U VIDEO OUT MUX 1 L pb – push (MIDDECK lt on)
LDRI MODE 1 pb – push
VIDEO OUT MON2 pb – push
IN PL2(VPU) pb – push

8. MANEUVER TO HANDOFF

Mon 1	Elbow
Dwnlnk	A
Mon 2	B
DTV	RSC
A31p	PI LOOB (Tip Elbow)

On MCC GO,

BRAKES – OFF (tb-OFF)
MODE – SINGLE, ENTER

Mnvr to OBSS HANDOFF posn:

	SY	SP	EP	WP	WY	WR
Scan 5 Posn	+41.7	+24.9	-83.4	-22.7	+11.6	-73.6
1: WY +					+21.0	
2: WR +						+25.0
3: SP +		+73.5				
4: EP –			-94.3			
5: SY –	-9.2					
6: WR –						-65.7
7: WP –				-57.7		
OBSS Handoff	-9.2	+73.5	-94.3	-57.7	+21.0	-65.7

X	Y	Z	PITCH	YAW	ROLL	PL ID
-1030	+492	-526	2	270	348	2

*display singularity

BRAKES – ON (tb-ON)

Notify SSRMS Operator, SRMS at OBSS Handoff posn, GO for maneuver to Handoff Pre-grapple position