STS-118 / 13A.1

FD 03 Execute Package

MSG	Page(s)	Title
012A	1 - 2	FD03 Summary Timeline **(pdf)**
013A	3 - 14	FD03 Flight Plan Revision **(pdf)**
014A	15 - 16	FD03 Mission Summary **(pdf)**
015	17 - 19	FD03 Transfer Message **(pdf)**
016	20 - 21	Updated EMU Consumables Cue Card **(pdf)**
017	22 - 23	Fluid Jumper Install Get-Ahead **(pdf)**
018	24	FD03 EVA Notes **(pdf)**
019	---	FD02 MMT Summary **(pdf - Electronic Only)**
020A	25	FD01 Conjunction Summary **(pdf)**
021	26	OGS Jumper Info **(pdf)**
022	27	FD03 SPACEHAB Viewport Violations **(pdf)**
023	28 - 32	FD03 RELMO and MNVR PADS **(pdf)**
009	33 - 38	13A.1 DOUG Setup **(pdf)**

Approved by FAO: *Jaime Marshik*

Last Updated: Aug 10 2007 9:54AM GMT
JEDI *(**J**oint **E**xecute package **D**evelopment and **I**ntegration), v2.04.0003*

REPLANNED 08/10/07 03:29:47

NO EXERCISE WITH S5 GRAPPLED BY SRMS & SSRMS

GMT 08/10/07 (222)
β= 48.09
MET Day 001

11 12 13 14 15 16 17 18 19 20 21 22 12 13 14 15 16 17 18 19 20 21 22 23 002/00

FD03

STS-118

CDR KELLY	SLEEP	MNVR∆	POST SLEEP	POD*	GRPB	PWRUP	∆NC4	ISS RNDZ OPS	∆Ti	∆RPM	APPROACH T/L	DOCKING*	MNVR TEA	HOAT	GRPB	PWRDN	SSPTS	VERIF	WLCM	SFTY BRF	N2*	O2^	N2*	O2 P/B CONFIG
PLT HOBAUGH	SLEEP	POST SLEEP	GRPB	PWRUP	IMU	ISS RNDZ OPS	APPROACH T/L	HATCH LEAK CK STS	GRPB	PWRDN	SSV-3	HATCH OPEN	WLCM	SFTY BRF	SPGRMS	SGRPLS	SGRMS	OPCU	ACT	XFER
MS1 CALDWELL	SLEEP	SLVA	LOG	POST SLEEP	EXERCISE	ISS RNDZ OPS	OTU*	SSV-2	ISS RNDZ OPS	APPROACH T/L	DOCKING*	POST RNDZ PGSC CNFG	PCS	S-STS SETUP	S5	GRPL	SRMS S5 UN-BERTH	WLCM	SFTY BRF	SRMS MVR S5 H/O	S5 UNGPL	XFER
MS2 MASTRACCHIO	SLEEP	POST	SLEEP	SIMO INIT	POST SLEEP	SIMO TERM	POST SLEEP	EXERCISE	ISS RDZ OPS	APPROACH T/L	DOCKING*	HATCH LEAK CK STS	A/L PREP INGR	S5	GRPL	SRMS S5 UN-BERTH	WLCM	SFTY BRF	SRMS MVR S5 H/O	E-LK PREP	REBA	C/O	EVA TL XFR
MS3 WILLIAMS	SLEEP	SLVA	LOG	POST SLEEP	CMA	ISS RDZ OPS	EMU	RMVL	EXERCISE	APPROACH T/L	DOCKING*	POST RNDZ PGSC CNFG	A/L PREP INGR	HATCH OPEN	WLCM	SFTY BRF	EMU XFER TO ISS	REBA#	E-LK PREP	REBA	C/O	EVA TL XFR
MS4 MORGAN	SLEEP	SLVA	POST SLEEP - SHAB	XFR UPDAT	POST	SLEEP	COND S/U	SHAB PREP FOR DOCK	EXERCISE	P/TV02 DOCK OPS	DOCKING*	H/L ICOM CFG	P/TV 04 S/U	SHAB POST DOCK RCNFG	WLCM	SFTY BRF	PTV 05 S/U	S5 UNGPL	XFER
MS5 DREW	SLEEP	CDM#	POST SLEEP	EXERCISE	SHAB PREP FOR DOCK	MRLIN	EMU	RMVL	P/TV02 S/U DOCK	P/TV02 DOCK OPS	DOCKING*	PTV06 S/U (S5)	PCS	S-STS SETUP	CDM#	SHAB POST DOCK RCNFG	WLCM	SFTY BRF	RPM*	SODF XFER	CBM	DATIL	REBA#	XFER

EXP 15

ISS CDR YURCHIKHIN	SLEEP (8.5 HRS)	POST SLEEP	DPC	VRFY P/TV S/U	ГАНК	EXERCISE TVIS	MEAL	400MM	RBARM	FILM	IMAG*	EXERCISE RED	CAMR*	HATCH OPEN	WLCM	SFTY BRF	RPM*	EVA DCS CNFG	IMS EDIT	♣
FE-1 KOTOV	SLEEP (8.5 HRS)	POST SLEEP	DPC	VRFY P/TV S/U	⊕	СТИМУЛ	♦	EXERCISE RED	MEAL	800MM	RBARM	FILM	PMA2 CFG	DOCK*	EXERCISE TVIS	AK 1M SMPL	WLCM	SFTY BRF	IWIS DEACT	EMU XFER TO ISS	REBA#	REBA	C/O
FE-2 ANDERSON	SLEEP (8.5 HRS)	POST SLEEP	LAB**	MSS**	DPC	EXERCISE TVIS + RED	IWIS S/U	MEAL	VTIDEOR	TIMER	MEAL	DOCK	VIDEO	HATCH LK CK-ISS	HATCH OPEN	WLCM	SFTY BRF	SPGRMS	JRNL	SGRPLS	SGRMS	E-LK PREP	O2 P/B CONFIG

STS

DAY/NIGHT

ORBIT 24 25 26 27 28 29 30 31 32

TDRS W -171 E -46 Z -275

ORB ATT -ZLV -XVV | -ZLV +YVV | RNDZ | DK | BIAS -XLV -ZVV

SSRMS WS1 PDGF1

NOTES

#DEACT *A HTR RCFG *WNDW CLS ⊕C&T-RPM COMM-CNFG ♦ЭЛЕК ТРОН *ACT *D/L *AUDIO #BATT C/O *RPM D/A ^CLOSE O2 ORIFICE *INIT *TERM #INSTALL ♣COX MNT

*DOCKING(1/19:17)

*Image Xfer

08/10/07 03:29:47 **REPLANNED**

GMT 08/10/07 (222) 23 08/11 01 02 03 04 05 06 07 08 09 10
β = 45.75 002/00 01 02 03 04 05 06 07 08 09 10 11 12
MET Day 002

STS-118	FD03 CDR KELLY	O2 P/B CONFIG	FES#	EVA PROC RVW		PRE SLEEP CK HUM SEP	PMC A/G	PRE SLEEP			SLEEP
	PLT HOBAUGH	XFER	CGBA5 XFER MCIU^	EVA PROC RVW		PRE SLEEP					SLEEP
	MS1 CALDWELL	XFER	DOCK PLYBK	EVA PROC RVW	EVA1 TOOL	PRE SLEEP					SLEEP
	MS2 MASTRACCHIO	♣ EVA1 TOOL	PRE SLEEP	EVA PROC RVW	PRE SLEEP		MASK PB/TOOL CONFIG	PRE SLEEP			SLEEP
							10.2 DPRS	ISS A/L CAMPOUT @ 10.2 psi			
	MS3 WILLIAMS	⊕ EVA1 TOOL	BATT	EVA PROC RVW	PRE SLEEP		MASK PB/TOOL CONFIG	PRE SLEEP			SLEEP
	MS4 MORGAN	XFER	XFER TAGUP	EVA PROC RVW	XFER BRIEF	PRE SLEEP - SHAB					SLEEP
	MS5 DREW	XFER	XFER TAGUP	EVA PROC RVW	MRLIN CCMA	PRE SLEEP					SLEEP
EXP 15	ISS CDR YURCHIKHIN	COЖ MNT	RPM*	EVA PROC RVW	DPC	PREP WORK	PRE SLEEP				SLEEP (8.5)
	FE-1 KOTOV	СОГС ЗЛЕК ТРОН ON	EXDL	EVA PROC RVW	DPC	PREP WORK	PRE SLEEP				SLEEP (8.5)
	FE-2 ANDERSON	O2 P/B CONFIG		EVA PROC RVW	DPC	PREP WORK	PRE SLEEP				SLEEP (8.5)

STS

DAY/NIGHT

ORBIT 32 33 34 35 36 37 38 39 40

TDRS W -171 E -46 Z -275

ORB ATT BIAS -XLV -ZVV

SSRMS WS1 PDGF1

NOTES
♣EVA TL XFR
⊕EVA TL XFR
#OFF
*Hardcard Return
^FILTER CK

MSG INDEX

MSG NO.	TITLE
009	13A.1 DOUG Setup
012	FD03 Summary Timeline
013	FD03 Flight Plan Revision
014	FD03 Mission Summary
015	FD03 Transfer Message
016	Updated EMU Consumable Cue Card
017	Fluid Jumper Install Get-Ahead
018	FD03 EVA Note
019	FD02 MMT Summary (Electronic Only)
020	FD01 Conjunction Summary
021	OGS Jumper Info
022	FD03 SPACEHAB Viewport Violations
023	FD03 RELMO and MNVR PADS

1. Exercise Constraints:

   A. The generic exercise constraints that apply to the entire docked timeframe are listed in the table below.

Constraint
RED limited to 3 sec (squats and heel raises) and 2 sec (situps) between repetitions
HC-1 limited to 3 sec (torso bending and rowing) and 2 sec (hammer throw and forearm bending) between repetitions
Use of theraband or any other exercise band while exercising on Shuttle Ergometer or CEVIS is prohibited

   B. The table below summarizes the Shuttle and ISS exercise constraints that are specific for today. These constraints are also noted in your timelines for your reference.

Activity	Exercise Constraints	
	Shuttle	ISS
S5 HANDOFF	No exercise while both arms are grappled to S5	No exercise while both arms are grappled to S5

2. For today's cryo config, O2 Tanks 1, 5, and H2 Tanks 2, 5, will be active with dual heaters. We will plan on performing Manual Heater Ops for O2 TK2 starting on FD4 and continuing for several days to utilize the cryo in that tank and provide quantity balancing. You can review EPS SSR-201 at your leisure for this operation.

   R1 CRYO O2 MANF VLV TK1 - OP (tb-OP)
   H2 MANF VLV TK2 - OP (tb-OP)

3. SIMO SUPPLY/WASTE DUMP:
   At MET 1/13:15, perform a simo supply and waste water dump using SUPPLY/WASTE WATER DUMP (ORB OPS, ECLS) p. 5-2. MCC will TMBU limits in Steps B and K.

   The supply dump duration will be 60 minutes. The SPLY H2O Dumpline Purge Device can be found in the CHCK.

   Dump waste to 5%. Nozzle open time will be ~25 minutes.

4. When viewing your e-mail, don't forget to move all messages that you want to keep from your INBOX, SENT ITEMS and WORK RELATED folders to your Personal Folders. This will keep your mail files smaller and will reduce the time required to uplink them following the mail synchs.

5. We have updated all PGSCs with the current HazMat files.

6. MSG 022 contains the SPACEHAB viewport violations for today. Please post that message next to the viewport. There are no callouts in the Flight Plan referencing those times.

7. MSG 009 has been uplinked for your reference. It contains the SSRMS DOUG setup notes for each SSRMS activity during the docked mission.

8. REPLACE PAGES 2-6, 2-8, AND 3-20 THROUGH 3-29.

STS-118 FD03

GMT Date 08/10 (222) | W | TDRSE | Z | DORB | ORB | MET Day 001 | STS ATI | CDR KELLY | PLT HOBAUGH | MS1 CALDWELL | Notes

FD03 EZ ACTIVITIES
TEPC(STATUS CHECK)
(ORB OPS, CREW SYS)Step A6
OCAC Filter Inspect
Hard Reboot PGSCs (Except WLES & WORLDMAP)

SLEEP | SLEEP | SLEEP

< -ZLV+YVV(13:00)

POST-SLEEP ACTIVITY (ORB OPS, CREW SYS) | POST-SLEEP ACTIVITY (ORB OPS, CREW SYS) | SALIVA COLLECT(ORB OPS, SDBI)
FLIGHT SLEEP LOG(ORB OPS, SDBI)
POST-SLEEP ACTIVITY (ORB OPS, CREW SYS)

A A14 RCS/OMS HTR L POD -B OFF
-A AUTO
R POD -B OFF
-A AUTO

RCS/OMS POD HTR RECONFIG A
PRIORITY PWRUP GRP B(ORB PKT,PRIOR PWRDN) Steps 12,10,9,6(Triple G2), and 5 (In Step 12, Recover IMU 1) | PRIORITY PWRUP GRP B(ORB PKT,PRIOR PWRDN) Steps 12,10,9,6(Triple G2), and 5 (In Step 12, Recover IMU 1)
RENDEZVOUS TIMELINE (RNDZ, RENDEZVOUS T/L) | IMU STAR OF OPPTY ALIGN(ORB OPS,GNC)
RENDEZVOUS TIMELINE (RNDZ, RENDEZVOUS T/L)

UPDATE H2O WASTE DUMP QTY

TRANSITION TO RNDZ C/L AT MET 01/14:20

< NC4 (1/15:08)

EXERCISE

STS-118 FD03

GMT Date 08/10 (222) | W | TDRSE | Z | DORB | ORB | MET Day 001 | STS ATI

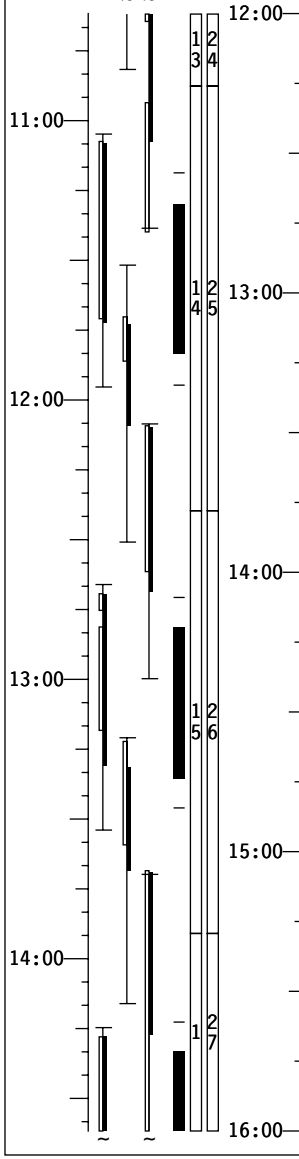

MET	STS ATI	MS2 MASTRACCHIO	MS3 WILLIAMS	MS4 MORGAN	MS5 DREW	Notes
12:00	-ZLV -XVV	SLEEP	SLEEP	SLEEP	SLEEP	
13:00	-ZLV +YVV	POST-SLEEP ACTIVITY (ORB OPS, CREW SYS) SUPPLY/WASTE WATER DUMP (ORB OPS, ECLS) Init Supply/Waste Dump Ref. MSG 013, Item 3 POST-SLEEP ACTIVITY (ORB OPS, CREW SYS)	SALIVA COLLECT(ORB OPS, SDBI) FLIGHT SLEEP LOG(ORB OPS, SDBI) POST-SLEEP ACTIVITY (ORB OPS, CREW SYS)	SALIVA COLLECT(ORB OPS, SDBI) POST-SLEEP ACTIVITY (ORB OPS, CREW SYS) SH POST-SLEEP CONFIG (SH OPS, ON-ORBIT)	CDM DEACT(ORB OPS, CDM DTO) POST-SLEEP ACTIVITY (ORB OPS, CREW SYS)	
14:00		SUPPLY/WASTE WATER DUMP (ORB OPS, ECLS) Term Supply/Waste Dump Ref. MSG 013, Item 3 POST-SLEEP ACTIVITY (ORB OPS, CREW SYS)				
15:00	RNDZ			DAILY TRANSFER LIST UPDATE Ref. MSG 015		
16:00				POST-SLEEP ACTIVITY (ORB OPS, CREW SYS) SHUTTLE COND COLLECT(ORB OPS, ECLS) Perform SETUP; Ref. MSG 005	EXERCISE	

STS-118 FD03

GMT Date 08/10 (222) | W | TDRSE | Z | DORB 1 2 3 4 | ORB 27 28 29 30 | MET Day 001 | STS ATI

CDR KELLY | PLT HOBAUGH | MS1 CALDWELL | Notes

16:00

RENDEZVOUS TIMELINE
(RNDZ, RENDEZVOUS T/L)

RENDEZVOUS TIMELINE
(RNDZ, RENDEZVOUS T/L)

15:00

EXERCISE

< Ti (16:38)

RENDEZVOUS TIMELINE
(RNDZ, RENDEZVOUS T/L)

17:00

SSP1 OIU PWR - OIU 1 ON, √tb-UP
SSV OUTRATE - 2
RENDEZVOUS TIMELINE
(RNDZ, RENDEZVOUS T/L)

UPLINK
TFL 192

RNDZ PET 00:00 (Ti)
AT MET 01/16:38

16:00

RNDZ

18:00

APPROACH
(CUE CARD, RNDZ)

APPROACH
(CUE CARD, RNDZ)

APPROACH
(CUE CARD, RNDZ)

UPLINK
Ø21 Only
Box B1

17:00

19:00

DOCKING (19:17)

UPLINK
Ø21 Only
Box C2,C3,D11

RETURN TO FLIGHT PLAN

18:00

DK

A Note time of DAP:AUTO, MET 1/____:____
At 10 & 20 min after AUTO,
DAP:FREE > 2 sec, then DAP:AUTO

MNVR (TRK)BIAS -XLV -ZVV
TG=2 BV=5 P=157 Y=3 OM=179
A12/FREE/VERN Init TRK
DAP:FREE > 2 sec, then DAP:AUTO A

POST DOCKING HATCH LEAK CHECK
(RNDZ, APDS)

POST RNDZ PGSC CONFIG
Config PGSCs per EVA/RMS Usage Chart

20:00

STS-118 FD03

GMT Date 08/10 (222) | W | TDRSE | Z | DORB | ORB | MET Day 001 | STS ATI

MS2 MASTRACCHIO	MS3 WILLIAMS	MS4 MORGAN	MS5 DREW	Notes
POST-SLEEP ACTIVITY (ORB OPS, CREW SYS)	POST-SLEEP ACTIVITY (ORB OPS, CREW SYS)	SHUTTLE COND COLLECT(ORB OPS, ECLS) Perform SETUP; Ref. MSG 005	EXERCISE	
	CCM-A STATUS CK(PL OPS, CCM-A)	SPACEHAB PREP FOR DOCKING (SH OPS, DOCKING)	SPACEHAB PREP FOR DOCKING (SH OPS, DOCKING)	
	RENDEZVOUS TIMELINE (RNDZ, RENDEZVOUS T/L)			
EXERCISE			MERLIN STAT CK(PL OPS,MERLIN/SPEGIS)	
	EMU REMOVAL Disconnect EMUs from AAPs, stow in Middeck		EMU REMOVAL Disconnect EMUs from AAPs, stow in Middeck	
			P/TV02 DOCK (P/TV, SCENES) SETUP	
RENDEZVOUS TIMELINE (RNDZ, RENDEZVOUS T/L)		EXERCISE		
	EXERCISE		P/TV02 DOCK (P/TV, SCENES) OPS	
		P/TV02 DOCK (P/TV, SCENES) OPS		
APPROACH (CUE CARD, RNDZ)				
	APPROACH (CUE CARD, RNDZ)			
RETURN TO FLIGHT PLAN				
POST DOCKING HATCH LEAK CHECK (RNDZ, APDS)	POST RNDZ PGSC CONFIG Configure PGSCs per EVA/RMS Usage Chart	JNT OPS: 6.109 H/L ICOM AUDIO Steps 1, 5, & 6	P/TV06 S5 UNBERTH (P/TV, SCENES) SETUP	

Time scale: 15:00, 16:00, 17:00, 18:00; MET: 16:00, 17:00, 18:00, 19:00, 20:00

STS ATI: RNDZ, DK

DORB: 1, 2, 3, 4; ORB: 27, 28, 29, 30

STS-118 FD03

GMT Date 08/10 (222) | W | TDRSE | Z | DORB | ORB | MET Day 001 | STS ATT

CDR KELLY	PLT HOBAUGH	MS1 CALDWELL	Notes
MNVR (TRK)BIAS -XLV -ZVV	POST DOCKING HATCH LEAK CHECK (RNDZ, APDS)	POST RNDZ PGSC CONFIG Config PGSCs per EVA/RMS Usage Chart	
JNT OPS: 3.111 H/O ATT CNTL ORBITER TO CMG TA		JNT OPS: 6.107 PCS SETUP-SHUTTLE	
PRIORITY PWRDN GRP B(ORB PKT,PRIOR PWRDN) Steps 6(Single G2 - Perform after mnvr complete) & 12(IMU 1-STBY) O6 S TRK PWR-Z - OFF	PRIORITY PWRDN GRP B(ORB PKT,PRIOR PWRDN) Steps 6(Single G2 - Perform after mnvr complete) & 12(IMU 1-STBY) O6 S TRK PWR-Z - OFF SSV OUTRATE - 3 JNT OPS: 2.106 HATCH OPEN AND DUCT INSTALL (BYPASS CONFIG) √MCC Step 1 complete, Steps 2-11	S5 GRAPPLE (PDRS, NOMINAL S5 OPS)	UPLINK 321 Only Box C2, D2
SSPTS ODS CONNECTOR VERIF A15 ODS MATE X1,X2 (two) - ON √MCC then - OFF		S5 UNBERTH (PDRS, NOMINAL S5 OPS)	UPLINK TFL 199
WELCOME	WELCOME	WELCOME	
SAFETY BRIEF	SAFETY BRIEF	SAFETY BRIEF	
	ROBO: 1.100 SSRMS MANEUVER TO S5 PRE-GRAPPLE		
N2 RPRS USING P/L N2 VLV [A] (ORB OPS,ECLS) Steps 1-6 CLOSE O2 BLEED ORIFICE MO69M LEH O2 8 vlv - CL	[A] MCC will TMBU SM limits	S5 HANDOFF (PDRS, NOMINAL S5 OPS)	
	ROBO: 1.110 SSRMS S5 GRAPPLE		NO EXERCISE WHILE S5 GRAPPLED BY SRMS & SSRMS
[B] SSPTS OPCU ACT On MCC Go: Activate OPCU 1 and 2 In Step 3: For OPCU 1 and 2 adjust voltage 17 increments UP for both		S5 UNGRAPPLE (PDRS, NOMINAL S5 OPS) Ungrapple & MNVR to S5 Install view posn	
	SSPTS OPCU ACT (ORB OPS, EPS) [B]		
N2 REPRESS USING P/L N2 VALVES [A] (ORB OPS, ECLS) Steps 7-12 JNT OPS: 3.120 PREBREATHE USING SHUTTLE O2 SETUP	TRANSFER Ref MSG 015 & SH Xfer List: Item 106	TRANSFER Ref. Transfer List & MSG 015	

Time scale: 19:00, 20:00, 21:00, 22:00, 23:00, 00:00

Attitude: 20:00, 21:00, 22:00, 23:00, 00:00

BIAS -XLV -ZVV

Notes: NO EXERCISE WHILE S5 GRAPPLED BY SRMS & SSRMS

STS-118 FD03

GMT Date 08/10 (222) | W E Z | DORB 4 5 6 | ORB 30 31 32 | MET Day 001 | STS ATI BIAS-XLV-ZVV

MS2 MASTRACCHIO

- POST DOCKING HATCH LEAK CHECK (RNDZ, APDS)
- A/L PREP FOR INGRS-BYPASS CONFG (RNDZ, APDS)
- S5 GRAPPLE (PDRS, NOMINAL S5 OPS)
- S5 UNBERTH (PDRS, NOMINAL S5 OPS)
- WELCOME
- SAFETY BRIEF
- A ISS RPM IMAGE TRANSFER On MCC GO: Retrieve RPM image card from ISS and place in KFX PGSC
- S5 HANDOFF (PDRS, NOMINAL S5 OPS)
- EVA SYS: 1.305 EQUIP LOCK PREP Steps 7-34 (In Step 34: confirm PBAs-4 isolated crew)
- EVA SYS: 1.403 REBA POWERED HARDWARE CHECKOUT
- EVA TOOL XFER TO ISS (EVA,A/L CONFIG) Ref MDDK Xfer List: Item 39

MS3 WILLIAMS

- POST RNDZ PGSC CONFIG Configure PGSCs per EVA/RMS Usage Chart
- A/L PREP FOR INGRS-BYPASS CONFG (RNDZ, APDS)
- JNT OPS: 2.106 HATCH OPEN AND DUCT INSTALL (BYPASS CONFIG) √MCC Step 1 complete, Steps 2-11
- WELCOME
- SAFETY BRIEF
- EMU TRANSFER TO ISS (EVA, A/L CONFIG) Ref MDDK Xfer List:Items 35-38, 40-42
- EVA SYS: 1.307 REBA INST/REMOV Installation steps
- EVA SYS: 1.305 EQUIP LOCK PREP Steps 7-34 (In Step 34: confirm PBAs-4 isolated crew)
- EVA SYS: 1.403 REBA POWERED HARDWARE CHECKOUT
- EVA TOOL XFER TO ISS (EVA,A/L CONFIG) Ref MDDK Xfer List: Item 39

MS4 MORGAN

- P/TV04 INGRESS/EGRESS (P/TV, SCENES) SETUP
- SPACEHAB RECONFIG POST DOCKING (SH OPS, DOCKING)
- WELCOME
- SAFETY BRIEF
- P/TV05 ISS INTERNAL OPS (S/U) (P/TV, SCENES) SETUP: BPSMU and RWS
- S5 UNGRAPPLE (PDRS, NOMINAL S5 OPS) Ungrapple & MNVR to S5 Install view posn
- TRANSFER Ref MSG 015 & SH Xfer List: Items 159-163

MS5 DREW

- P/TV06 S5 UNBERTH (P/TV, SCENES) SETUP
- JNT OPS: 6.107 PCS SETUP-SHUTTLE
- CDM SETUP & BATT C/O(ORB OPS) Steps 3-12 for Location 2
- SPACEHAB RECONFIG POST DOCKING (SH OPS, DOCKING)
- WELCOME
- SAFETY BRIEF
- ISS RPM IMAGE TRANSFER A
- SODF TRANSFER Ref MDDK Xfer List: Item 46 Deploy new JEE Cue Cards at A/L and LAB FWD HATCH
- CBTM STATUS CHECK (PL OPS, CBTM)
- EVA SYS: 1.307 REBA INST/REMOV Installation steps
- TRANSFER Ref. Transfer List & MSG 015

Notes

NO EXERCISE WHILE S5 GRAPPLED BY SRMS & SSRMS

STS-118 FD03

GMT Date 08/10 (222) | W | TDRSE | Z | DORB | ORB | MET Day 002 | STS ATI | CDR KELLY | PLT HOBAUGH | MS1 CALDWELL | Notes

23:00 00:00 01:00 02:00

6 32 7 33 8 34 9 35

00:00 01:00 02:00 03:00 04:00

BIAS-XLV-ZVV

CDR KELLY

JNT OPS: 3.120 PREBREATHE USING SHUTTLE O2 SETUP

On MCC GO:
L1 FLASH EVAP CNTLR PRI B-OFF

EVA PROCEDURE REVIEW
REF: EVA 1 BRIEFING CARD (EVA, TIMELINES)

Ref. MSG 018

PRE-SLEEP ACTIVITY (ORB OPS, CREW SYS)

√ HUM SEP for H2O Accumulation

PRIVATE MEDICAL CONFERENCE
Perform via PRIVATE A/G2

PRE-SLEEP ACTIVITY (ORB OPS, CREW SYS)

PLT HOBAUGH

TRANSFER
Ref MSG 015 &
SH Xfer List: Item 106

CGBA-5 TRANSFER
Ref MDDK Xfer List: Items 3 & 727

L17 Check MCIU filter screen

EVA PROCEDURE REVIEW
REF: EVA 1 BRIEFING CARD (EVA, TIMELINES)

Ref. MSG 018

PRE-SLEEP ACTIVITY (ORB OPS, CREW SYS)

MS1 CALDWELL

TRANSFER
Ref. Transfer List & MSG 015

PLAYBACK (DIGITAL)
(P/TV, CUE CARD)
DOCKING
KU TDRW (00:19-00:35)
(00:40-00:43)

EVA PROCEDURE REVIEW
REF: EVA 1 BRIEFING CARD (EVA, TIMELINES)

Ref. MSG 018

PRE EVA 1 TOOL CONFIG (EVA, TIMELINES)

PRE-SLEEP ACTIVITY (ORB OPS, CREW SYS)

STS-118 FD03

GMT Date 08/10 (222) | W | TDRSE | Z | DORB | ORB | MET Day 002 | STS ATI | MS2 MASTRACCHIO | MS3 WILLIAMS | MS4 MORGAN | MS5 DREW | Notes

23:00 | 00:00 | 01:00 | 02:00 | 03:00 | 04:00

DORB: 6, 7, 8, 9 — ORB: 32, 33, 34, 35

BIAS-XLV-ZVV

MS2 MASTRACCHIO	MS3 WILLIAMS	MS4 MORGAN	MS5 DREW
PRE EVA 1 TOOL CONFIG (EVA, TIMELINES)	PRE EVA 1 TOOL CONFIG (EVA, TIMELINES)	TRANSFER Ref MSG 015 & SH Xfer List: Items 159-163	TRANSFER Ref. Transfer List & MSG 015
PRE-SLEEP ACTIVITY (ORB OPS, CREW SYS)	EMU BATTERY CHANGEOUT Ref. MSG 018 & 016	DAILY STS/ISS CREW TRANSFER TAGUP	DAILY STS/ISS CREW TRANSFER TAGUP
EVA PROCEDURE REVIEW REF: EVA 1 BRIEFING CARD (EVA, TIMELINES) Ref. MSG 018	EVA PROCEDURE REVIEW REF: EVA 1 BRIEFING CARD (EVA, TIMELINES) Ref. MSG 018	EVA PROCEDURE REVIEW REF: EVA 1 BRIEFING CARD (EVA, TIMELINES) Ref. MSG 018	EVA PROCEDURE REVIEW REF: EVA 1 BRIEFING CARD (EVA, TIMELINES) Ref. MSG 018
PRE-SLEEP ACTIVITY (ORB OPS, CREW SYS)	PRE-SLEEP ACTIVITY (ORB OPS, CREW SYS)	DAILY TRANSFER BRIEFING	MERLIN STAT CK(PL OPS,MERLIN/SPEGIS) CCM-A STATUS CK(PL OPS, CCM-A)
		PRE-SLEEP ACTIVITY (ORB OPS, CREW SYS)	PRE-SLEEP ACTIVITY (ORB OPS, CREW SYS)
		SH PRE-SLEEP CONFIG (SH OPS, ON-ORBIT)	
EVA SYS: 2.305 10.2 PSIA CAMPOUT MASK PREBREATHE REF: PRE EVA 1 TOOL CONFIG (EVA, TIMELINES)	EVA SYS: 2.305 10.2 PSIA CAMPOUT MASK PREBREATHE REF: PRE EVA 1 TOOL CONFIG (EVA, TIMELINES)		

STS-118 FD03

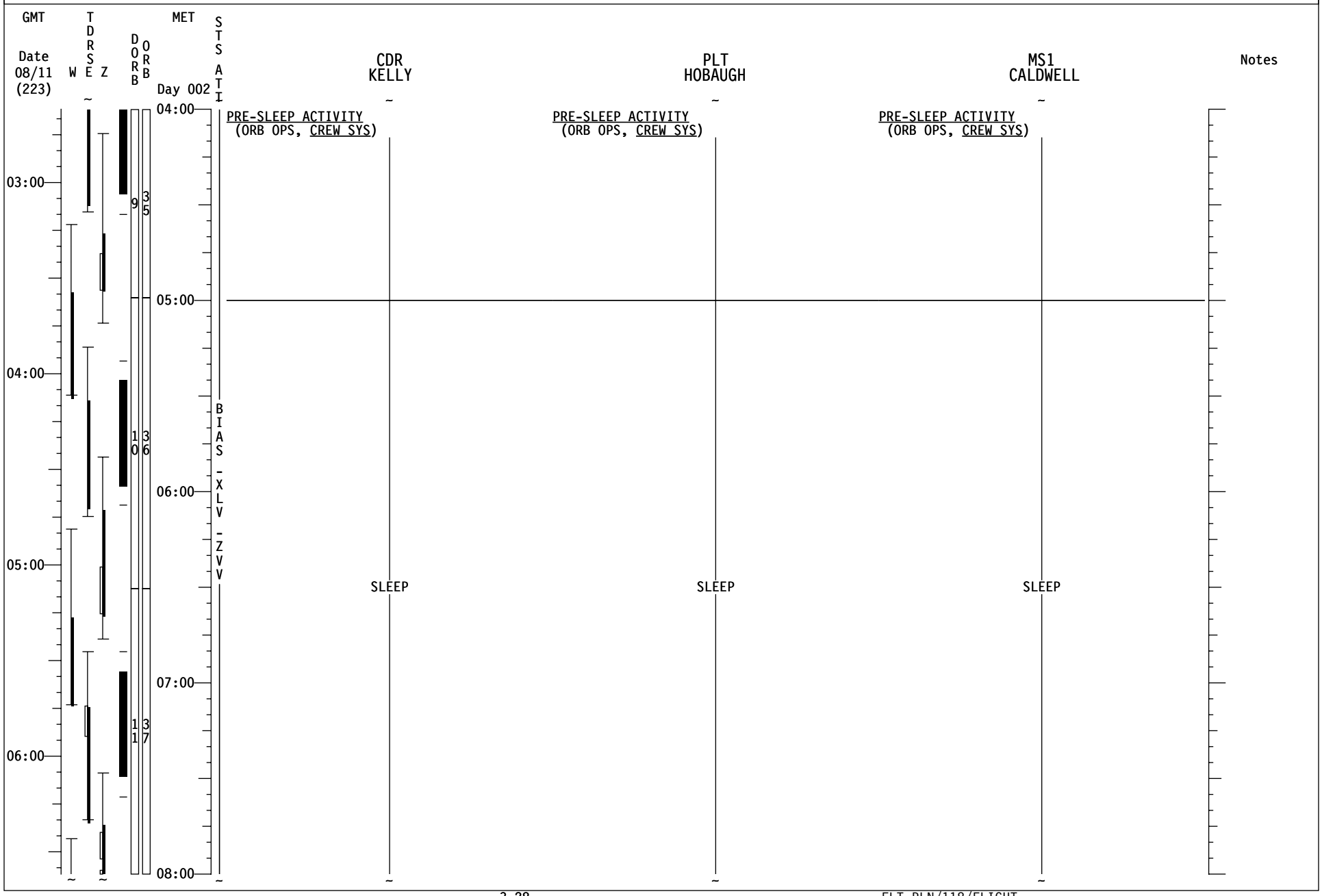
GMT
Date 08/11 (223)
W
TDRSE
Z
DORB
ORB
MET
Day 002
STS ATI
CDR KELLY
PLT HOBAUGH
MS1 CALDWELL
Notes
03:00
04:00
05:00
06:00
04:00
05:00
06:00
07:00
08:00
9 35
10 36
11 37
BIAS -XLV -ZVV
PRE-SLEEP ACTIVITY (ORB OPS, CREW SYS)
PRE-SLEEP ACTIVITY (ORB OPS, CREW SYS)
PRE-SLEEP ACTIVITY (ORB OPS, CREW SYS)
SLEEP
SLEEP
SLEEP

STS-118 FD03

GMT Date 08/11 (223) | W | TDRS E | TDRS Z | DORB 9 | DORB 10 | DORB 11 | ORB 35 | ORB 36 | ORB 37 | MET Day 002 | STS ATI

BIAS -XLV -ZVV

MS2 MASTRACCHIO	MS3 WILLIAMS	MS4 MORGAN	MS5 DREW	Notes
EVA SYS: 2.305 10.2 PSIA CAMPOUT MASK PREBREATHE	EVA SYS: 2.305 10.2 PSIA CAMPOUT MASK PREBREATHE	PRE-SLEEP ACTIVITY (ORB OPS, CREW SYS)	PRE-SLEEP ACTIVITY (ORB OPS, CREW SYS)	
REF: PRE EVA 1 TOOL CONFIG (EVA, TIMELINES)	REF: PRE EVA 1 TOOL CONFIG (EVA, TIMELINES)	SH PRE-SLEEP CONFIG (SH OPS, ON-ORBIT)		
PRE-SLEEP ACTIVITY (ORB OPS, CREW SYS)	PRE-SLEEP ACTIVITY (ORB OPS, CREW SYS)			
SLEEP	SLEEP	SLEEP	SLEEP	

Good Morning Endeavour!

Thanks for the great inspection yesterday. Everyone is very pleased with your great work on the survey!

We are all set for rendezvous. Have fun!

YOUR CURRENT ORBIT IS: 186 X 170 NM

<u>NOTAMS:</u>

EDW – EDWARDS: RWY 15/33 ELS ONLY. RWY 18L NOT USABLE.
NOR – NORTHRUP: RWY 17/35 ELS ONLY (DAMP). RWY 05/23 RED.
YHZ – HALIFAX: RWY 14/32 CLOSED & RWY 05/23 LIMITED TO 7,600' - 10 AUG 1130-2100Z.
WAK – WAKE ISLAND: CLOSED DUE TO RECONSTRUCTION.
YYR – GOOSE BAY: RWY 08/26 CLOSED. 16/34 AVAILABLE.
ZZA – ZARAGOZA: INSTALLING MOBILE NATO BARRIER.
IKF – KEFLAVIK: NO AGREEMENT FOR USE.
AWG – RIO GALLEGOS: NO AGREEMENT FOR USE.
BEN – NOT RECOMMENDED – POLITICALLY UNSTABLE. RUNWAY NOT MAINTAINED (DESERTED).

<u>NEXT 2 PLS OPPORTUNITIES:</u>

EDW22 ORB 33 – 2/01:19 (SKC 230/**19P26,** 2nd OPP: 230/16P23)
NOR17 ORB 48 – 3/00:08 (SCT070 SCT250 160/7P11)

<u>OMS TANK FAIL CAPABILITY:</u>
PRE-TI
L OMS FAIL: YES
R OMS FAIL: YES

POST-TI
L OMS FAIL: YES (SHALLOW TARGETS)
R OMS FAIL: YES (SHALLOW TARGETS)

<u>LEAKING OMS PRPLT BURN:</u>
PRE-TI
L OMS LEAK: ALWAYS OUT-OF-PLANE
R OMS LEAK: ALWAYS OUT-OF-PLANE

POST-TI
L OMS LEAK: BURN OUT-OF-PLANE AN+76 <= TIG <= AN+24
OTHERWISE BURN RETROGRADE
R OMS LEAK: BURN OUT-OF-PLANE AN+73 <= TIG <= AN+26
OTHERWISE BURN RETROGRADE

OMS QUANTITIES(%)
PRE-TI
L OMS OX = 47.2 R OMS OX = 44.9
FU = 47.3 FU = 44.9
POST-TI
L OMS OX = 46.0 R OMS OX = 44.9
FU = 46.0 FU = 44.9

SUBTRACT I'CNCT COUNTER FOR CURRENT OMS QUANTITIES

DELTA V AVAILABLE:

OMS	429 FPS
ARCS (TOTAL ABOVE QTY1)	37 FPS
TOTAL IN THE AFT	466 FPS
ARCS (TOTAL ABOVE QTY2)	66 FPS
FRCS (ABOVE QTY 1)	33 FPS
AFT QTY 1	84 %
AFT QTY 2	46 %

SYSTEM	FAILURE	IMPACT	WORK AROUND
GNC	ADTA 2 BITE (Discrete Input Good) annunciated when powered up for Elevon Park.	None. ADTA will work nominally and does not downmode the ADTA in the PASS or BFS.	If the BITE is still present during FCS C/O, additional high and low self tests may be requested to clear the indication.

Good morning Barb, Al & Dave,

Attached are the return Transfer List pages and reference items. We've also incorporated a few other changes. We are working on approval for returning some LHAs and BBAs the ISS crew R&R'd yesterday. Look for those in the next few days.

The Transfer List Excel file, FD03_TransferList_STS118.xls, is located on the KFX machine in **C:\OCA-up\transfer**.

For ISS, the Transfer List Excel file, FD03_TransferList_STS118.xls, is located in **K:\OCA-up\transfer**.

We've identified a problem with the Transfer List excel file when it is opened (we expect this to happen on both PGSCs and SSCs). When you open the excel file, you may receive the two options: "Disable Macros" or "Cancel". Choose "Disable macros". The sort tab and Find on All Sheets macros will not execute. However, you can still search for an item by using "Ctrl F". This problem is due to macro security settings and we are working to resolve this issue. We'll keep you informed of the status.

For today - FD03 Choreography

- Incorporate uplinked return plan in Transfer List books.

Middeck

- Item 46 (Al): Transfer ODF from MF57K to ISS.
- Items 35-42 (Rick, Dave & Oleg): Transfer EVA items from MDDK to ISS:
  - EVA bags of stuff
  - EMUs

Spacehab

- Item 106: (PLT) Transfer Coldbag from AC08 to ISS (to make room for returning CGBA2)
- Items 159-163: Begin transferring PF Rack Front items to ISS.
  - Transfer 2.0 CTB to LAB which contains spare RPCM for EVA2

Middeck/Spacehab:

- Items 3 & 727 (PLT): Swap CGBAs (CGBA5 from MDDK to Lab; CGBA2 from LAB to SH)

Please update the Middeck Transfer List as follows:

In **LAYOUTS** tab:
Replace page ML-1
Add page ML-2

In **MDDK RSPLY REALTIME ADDITIONS** tab:
Replace Resupply Page 9

In **RETURN** tab:
Add pages Return Page 1 through Return Page 6

In **MDDK RTN REALTIME ADDITIONS** tab:
Add Return Page 7

In **REFERENCES** tab:
Replace pages MD REF-1 through MD REF-4

Please update the Spacehab Transfer List as follows:

In **LAYOUTS** tab:
Add pages SL-5 through SL-8
Add pages SL-9 through SL-14

In **RESUPPLY** tab:
Replace following pages:
    Resupply Page 17
    Resupply Page 18
Make Pen and Ink update to Resupply Page 24:
    Item 173: In comments column, crossout “PF15”; replace with “SF17”

In **SWAP** tab
Replace following pages:
    Swap Page 7
    Swap Page 8
    Swap Page 14

In **RETURN** tab:
Add pages Return Page 8 through Return Page 25

In **SPACEHAB RTN REALTIME ADDITIONS** tab:
Add Return Page 26

In **REFERENCES** tab:
Replace pages SH REF-1 through SH REF-4
Replace page SH REF-5
Replace page SH REF-7
Replace page SH REF-8
Add page SH REF-9

For tomorrow - FD04 Choreography

Spacehab

- Items 159-163 (remaining items): Finish transferring PF Rack Front items to ISS.
  - Transfer Transponder 1.0 CTB to Node for EVA3
  - Temp stow FGB Solar Array Retraction Device foam for MISSE rtn packing.
- Items 102 & 105: Remove and transfer CTBS from AC03, AC06 to ISS
- Items 113-118: Move 5MLE launched at AP01 to AC03 and transfer contents to ISS
- Items 119-122.5 (Al): Move 5MLE launched at AP04 to AP01 and transfer contents to ISS
  - Temp stow PWRs on MDDK for fill on FD5
  - Swap wrenches in ISS IVA Toolbox in Node 1; add old ones to return bag 431
- Item 132.1 (Al): Transfer EPO KIT C to MDDK for EPO video

Middeck

- MDDK: Items 7-11: Unpack 5MLE Bag F (MD CEIL PORT 2)
  - Transfer CHeCS 1.0 CTB for RAD deploy (ISS crew) on FD6

Call us with any questions. Remember to stay flexibly organized ☺

- The Transfer Team

STS-118 CONSUMABLES TRACKING CUE CARD (Front)

EV1 Mt	EVA	LiOH (s/n) (b/c)	METOX (s/n) (b/c)	EMU Battery (s/n)	REBA (s/n) (b/c)	HL Battery (s/n)	ERCA (s/n) (Address)	SAFER (s/n)	PGT (s/n)	PGT Spare (s/n)
EMU 3015 L - HUT	1	Record s/n	N/A	2038[1]	1003	1015/1017	1010 16	1005	1004	1006
	2	N/A	0012 NO b/c	2039[2]	1003	1015/1017	1010 16	1005	1004	1006
	3	N/A	0017 7811J	2038[3]	1003	1015/1017	1010 16	1005	1004	1006
	↓	EVA 1 LiOH	N/A	2039	N/A	N/A	N/A	N/A	N/A	N/A

EV2 Wm	EVA	LiOH (s/n) (b/c)	METOX (s/n) (b/c)	EMU Battery (s/n)	REBA (s/n) (b/c)	HL Battery (s/n)	ERCA (s/n) (Address)	SAFER (s/n)	PGT (s/n)	PGT Spare (s/n)
EMU 3017 L - HUT	1	Record s/n	N/A	2041[1]	1004	1019/1021	1007 18	1006	1005	N/A
	2	N/A	0013 7794J	2040[2]	1004	1019/1021	1007 18	1006	1005	N/A
	4	N/A	0020 7795J	2041[3]	1004	1015/1017	1010 16	1005	1004	1006
	↓	EVA 1 LiOH	N/A	2040	N/A	N/A	N/A	N/A	N/A	N/A

EV3 Ad	EVA	LiOH (s/n) (b/c)	METOX (s/n) (b/c)	EMU Battery (s/n)	REBA (s/n) (b/c)	HL Battery (s/n)	ERCA (s/n) (Address)	SAFER (s/n)	PGT (s/n)	PGT Spare (s/n)
EMU 3008 XL - HUT	3	N/A	0015 7686J	2077[3]	1005	1019/1021	1007 18	1006	1005	N/A
	4	N/A	0021 7814J	2063[3]	1005	1019/1021	1007 18	1006	1005	N/A

Notes: [1] Charge FD05 for EVA 3 & Spare [2] Charge FD07 for Return [3] Leave discharged post-EVA

STS-118 CONSUMABLES TRACKING CUE CARD (Back)

Campout Metox

EVA 1	s/n 0007 b/c 7802J	s/n 0011 b/c 7792J
EVA 2 – 4	s/n 0016 b/c 7796J	s/n 0019 b/c 7807J

Post-EVA EMU H_2O Recharge

PWRs:
(use in order until empty)

s/n 1018 s/n 1025 s/n 1024

Waste Water CWC:

s/n 1059

Record IRU Quantity (lbm)

EVA 1

EVA 2

EVA 3

EVA 4

Post-EVA Metox Regens

FD 6, 8, & 10

s/n 0016 b/c 7796J s/n 0019 b/c 7807J

BSA Battery Recharge

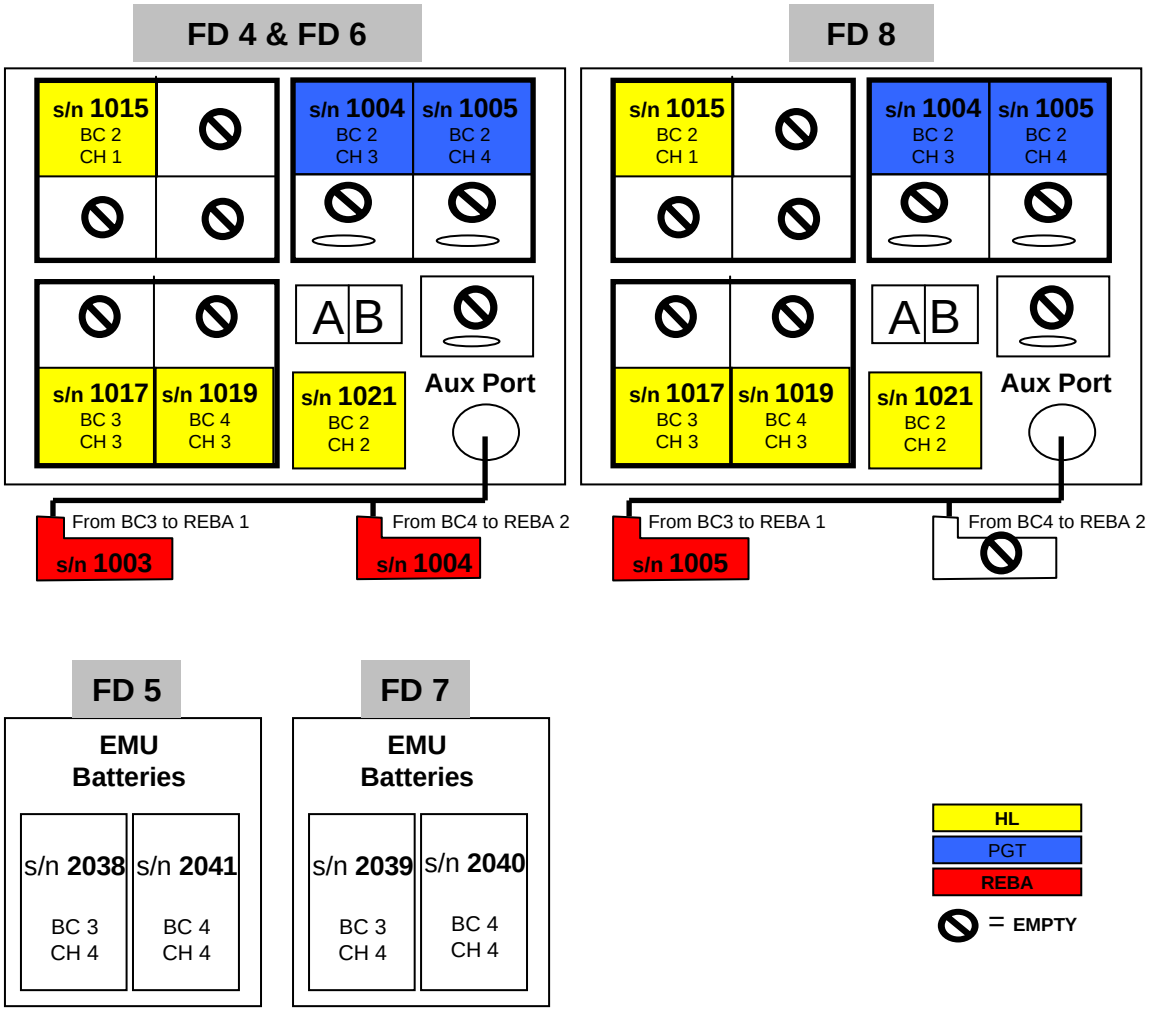

Metox / Battery Install

FD 5: Configure Mt and Wm EMUs for EVA 2 per cue card

FD 7: Configure Mt EMU for EVA 3 and Wm EMU for EVA 4 per cue card

FD 9: Prep Mt EMU for Return (↓) and Ad EMU for EVA 4 per cue card

S1/S3 & P1/P3 FLUID JUMPER INSTALL (00:30)

IV	EV (FF)	EV (FF)
IV: √S1 (P1) TRRJ locked	WARNING The 2ft KOZ for the S1 Radiator Beam begins just nadir of the umbilical tray. If TRRJ can not be locked, then body position must be maintained on tray or zenith.	WARNING The 2ft KOZ for the P1 Radiator Beam begins just nadir of the umbilical tray. If TRRJ can not be locked, then body position must be maintained on tray or zenith.
	CAUTION QDs expsed to direct sun can overtemp in 6 minutes. Shading by EMU or thermal shrouds can lengthen acceptable time with bootie removed.	CAUTION QDs expsed to direct sun can overtemp in 6 minutes. Shading by EMU or thermal shrouds can lengthen acceptable time with bootie removed.
DEMATE QD 1. √ Fwd white band visible, button up 2. Demate QD (pull back on release ring) MATE QD 1. Inspect QDs for FOD or damage 2. √ Dentent button up 3. √ Fwd white band not visible 4. Assess side loads 5. Mate QD; √ Fwd white band visible 6. Perform snap back test (√ Fwd white band visible) 7. Perform pull test 8. Perform gap check (visual) OPEN QD VALVE 1. Press button, move bail fwd (open valve) 2. √ Aft white band visible, button up 3. Verify detent button can be depressed	S1/S3 Fluid Jumper Install (00:30) 1. Translate to S1/S3 Face 6 (nadir) interface 2. Open shroud on S1 nadir umbilical tray 3. Open TA clamp 4. BRT to HR 3215 5. For QDs F56 & F57, open thermal booties and perform DEMATE QD steps in IV column (removes Fluid Jumper from S1) 6. Close TA clamp 7. Open thermal bootie and remove QD cap from M3 on S1 panel A503; stow in trash bag 8. Perform MATE QD steps (IV column) to mate QD F57 to M3 on S1 panel A503 9. For QD F57, perform OPEN VALVE steps (IV column) 10. Reinstall thermal booties 11. BRT to HR 3010 12. Open thermal bootie and remove QD cap from M1 on S3 panel A501; stow in trash bag 13. Perform MATE QD steps (IV column) to mate QD F56 to M1 on S3 panel A501 14. For QD F56, perform OPEN VALVE steps (IV column) 15. Reinstall thermal booties 16. Perform WVS survey of jumper connections 17. Replace S1 nadir umbilical tray shroud 18. Inspect EMU gloves	P1/P3 Fluid Jumper Install (00:30) 1. Translate to P1/P3 Face 6 (nadir) interface 2. Open shroud on P1 nadir umbilical tray 3. Open TA clamp 4. BRT to HR ____ 5. For QDs F186 & F187, open thermal booties and perform DEMATE QD steps in IV column (removes Fluid Jumper from P1) F186 is on M2 Panel A503; F187 is on M1 Panel A504 6. Close TA clamp 7. Open thermal bootie and remove QD cap from M3 on P1 panel A503; stow in trash bag 8. Perform MATE QD steps (IV column) to mate QD F186 to M3 on P1 panel A503 9. For QD F186, perform OPEN VALVE steps (IV column) 10. Reinstall thermal booties 11. BRT to HR ____ 12. Open thermal bootie and remove QD cap from M1 on P3 panel A501; stow in trash bag 13. Perform MATE QD steps (IV column) to mate QD F187 to M1 on P3 panel A501 14. For QD F187, perform OPEN VALVE steps (IV column) 15. Reinstall thermal booties 16. Perform WVS survey of jumper connections 17. Replace P1 nadir umbilical tray shroud 18. Inspect EMU gloves

FLUID JUMPER INSTALL TASK DATA SHEET

P1 to P3 Fluid Line – Stowed Config

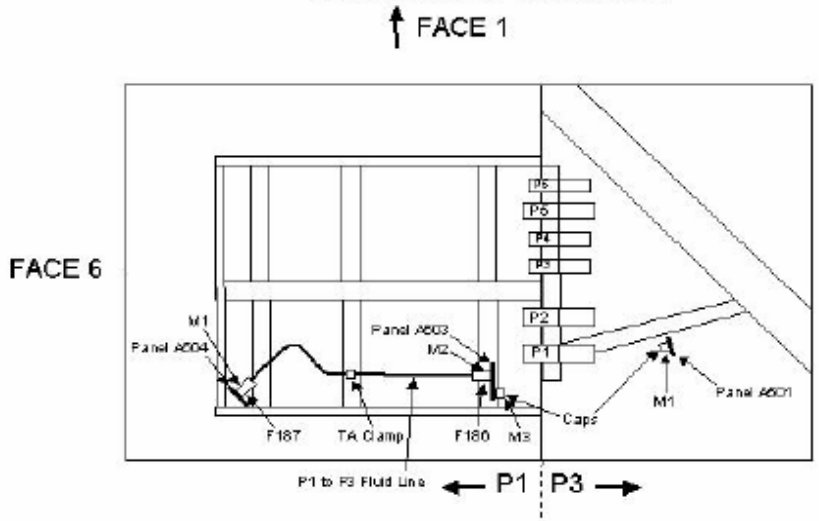

P1 to P3 Fluid Line – Deployed Config

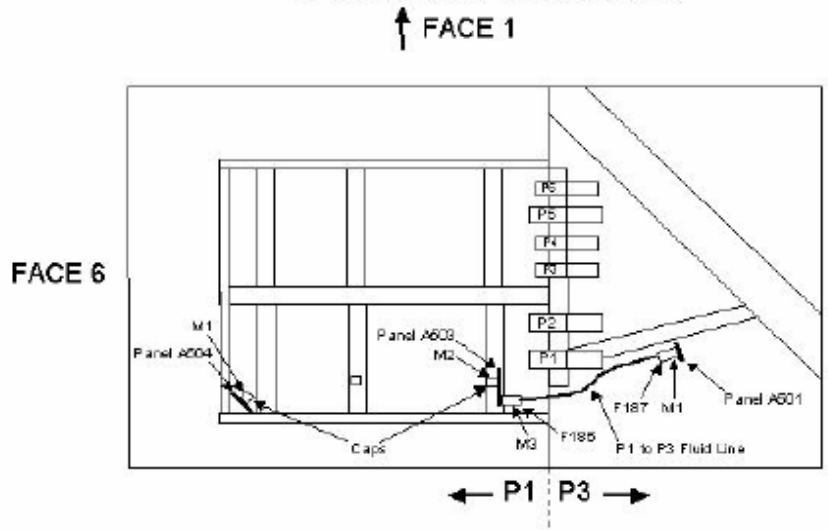

Notes:
1. No ammonia in jumper or behind any males; lines contain nitrogen only – no risk of contamination

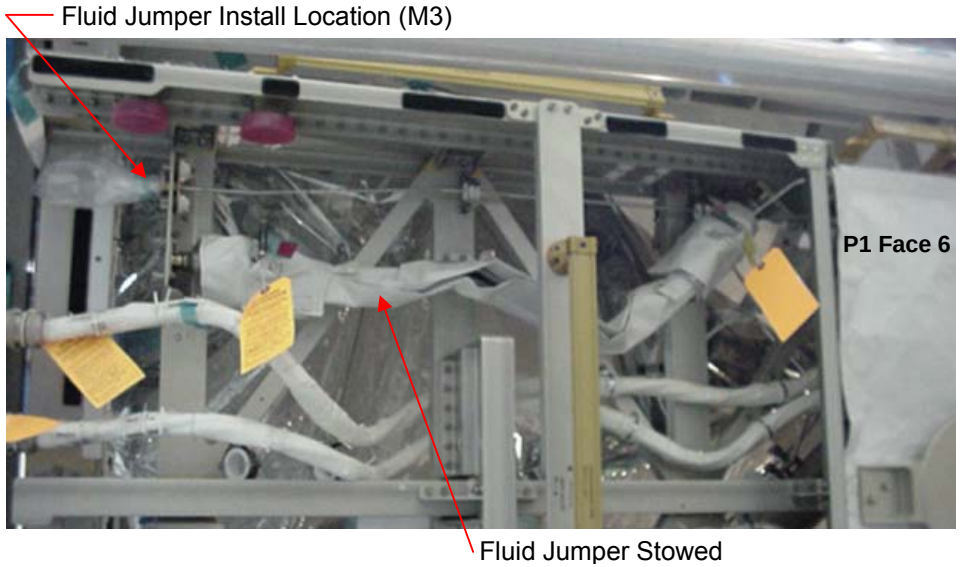

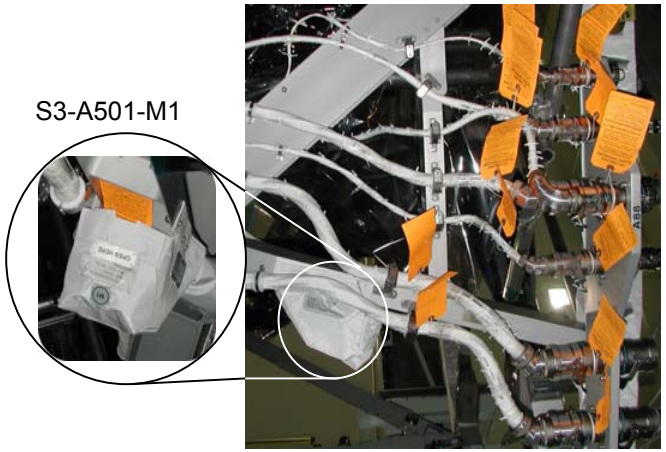

Ammonia Jumper Connection (S3-A501-M1)

Rick, Dave & Tracy, we have a couple of last minute notes and reminders before EVA1 tomorrow. We're looking forward to seeing you put all that training to work. Have a great EVA!

- Rick while translating underneath the MT/MBS there are some ungrounded connecters (issue briefed during quarantine). The connectors are ~ 2ft zenith of the UMA HRs you translate on, please stay nadir of the UMAs as you translate to avoid contacting these connecters.
- Tracy - we have uplinked the S1/S3 & P1/P3 Fluid Jumper Get Ahead Procedures (MSG 017 or ISS 15-0894). Please print it out and add it after 7-144 in the EVA FS. Priorities of get aheads have not changed; you are still go on the pre-flight list.

Also, the EMU batteries launched in the EMUs have a lower total charge capacity than the ones currently on ISS. To take full advantage of having LiOH on EVA 1, we want you to swap to higher capacity batteries so that battery power will not be your expected limiting consumable. The batteries you remove will be used on EVA 2. We have provided you with an updated Consumables Tracking Cue Card which contains the new battery usage and recharge plan for the rest of the mission.

Dave - we have scheduled a 10 min block of time called "BATTERY CHANGEOUT" for the following updates. It is scheduled right after the EVA 1 Tool Config.

- Please tape the uplinked pages (MSG 016 or ISS 15-0893) to your current Consumables Tracking Cue Card
- Install EMU batteries for EVA 1 according to the new plan using ISS EVA SYS 1.515 EMU METOX/LIOH/BATTERY REPLACEMENT. As a reminder, the ISS batteries are in the "Batteries" mesh bag located in the Equipment Lock.
- For our ground based consumables tracking we will need to know the LiOH s/n's that are in the EMU's. When you swap the batteries, please call those down to us.

FD 1 Conjunction during Payload Bay Door Opening Timeframe:

While you were busy opening the payload bay doors on FD 1, the MCC Ascent Team was monitoring a conjunction with a spent Delta rocket body that was in a 952 nm x 165 nm elliptical orbit with perigee just below that of the orbiter. The normal pre-launch screening process which evaluates the shuttle trajectory through two hours MET was executed per the normal MCC and USSTRATCOM procedures. This rocket body trajectory was cleared for launch and was outside the criteria that would have required the launch time to be adjusted to the next even minute.

After the OMS-2 burn was executed, the Ascent FDO passed the updated orbiter state vector to USSTRATCOM per standard procedures. After the standard USSTRATCOM evaluation process, which typically takes a minimum of 40 minutes to execute, a conjunction with the closest approach occurring at 0/01:34 MET was reported. The total miss distance was 2.3 km with a very close predicted radial miss of 0.1 km. The MCC received notice from USSTRATCOM approximately 14 minutes prior to this close conjunction. Because of the large uncertainty in the orbiter state vector in this post OMS-2 timeframe along with the limited time to plan and clear a maneuver, a burn was not performed.

On FD 2, a best estimate of the orbiter trajectory was developed using state vectors obtained from rev 2 orbit determination. Based on these state vectors the actual miss distance was 0.6 km in the radial direction with a total miss distance of 1.2 km. This reconstruction places the conjunction outside of the criteria for which the crew would be notified and for which a maneuver to clear the conjunction would be executed. This is not surprising based on previous studies of OMS-2 navigation accuracy, which were discussed by the Ascent Team on FD 1.

In fact, we have always known there is a vulnerability to changes in conjunctions in the post MECO and post OMS-2 timeframe because of the inherit navigation errors associated with accelerating the launch vehicle to orbital velocities and establishing the initial post OMS-2 orbit. Once a valid orbit state vector is available on rev 2, the orbit process is not subject to these errors, so this scenario is not applicable for the remainder of the STS-118 mission.

Steve Stich
STS-118 Ascent/Entry Flight Director

MSG 021 - OGS JUMPER INFO

During a ground analysis audit of ISS power jumpers, the Oxygen Generation System Sec Pwr jumper connector shells were found to not provide proper fault bonding. This improper fault bonding could allow the connector shell to become energized and become a shock hazard.

You will not have any nominal operations that bring you in contact with this jumper, but we wanted to be sure you were aware of the issue. If DAUI troubleshooting is performed, MS-5 and FE-2 should use care when working in this area. ISS Crew is aware of the issue.

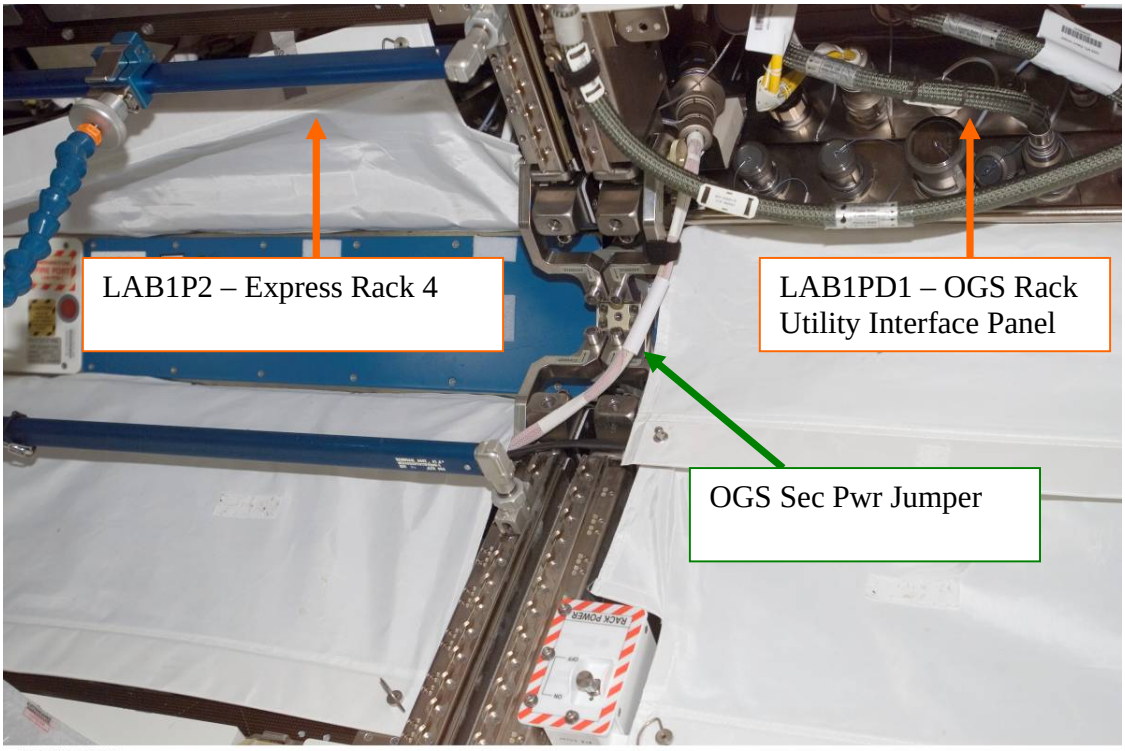

ISS014E11135

END OF PAGE 1 OF 1, MSG 021

MSG 022 - FD03 SPACEHAB VIEWPORT VIOLATIONS

MET	CONSTRAINT	ACTION
1/14:45 – 1/15:15	Sun in FOV	If Viewport open, HTR – OFF
1/16:15 – 1/16:50	Sun in FOV	If Viewport open, HTR – OFF
1/18:20 – 1/18:50	Sun in FOV	If Viewport open, HTR - OFF

FLIGHT NOTE

TO: FD, CAPCOM, FAO, RENDEZVOUS, PROP, GC
FROM: FDO
SUBJECT: MANEUVER TIGS

COPIES: 1

	MET	
NC-4	001:15:08:41.360	
NCC	001:15:40:55.000	
TI	001:16:38:37.000	PET = 0:0 ; SS - 36 MIN
MC1	001:16:58:37.000	
MC2	001:17:28:31.000	ET = 0:0
MC3	001:17:45:31.000	MC2 + 17 MIN
MC4	001:17:55:31.000	MC2 + 27 MIN
DOCK	001:19:16:44.000	

LONG RANGE RELATIVE MOTION

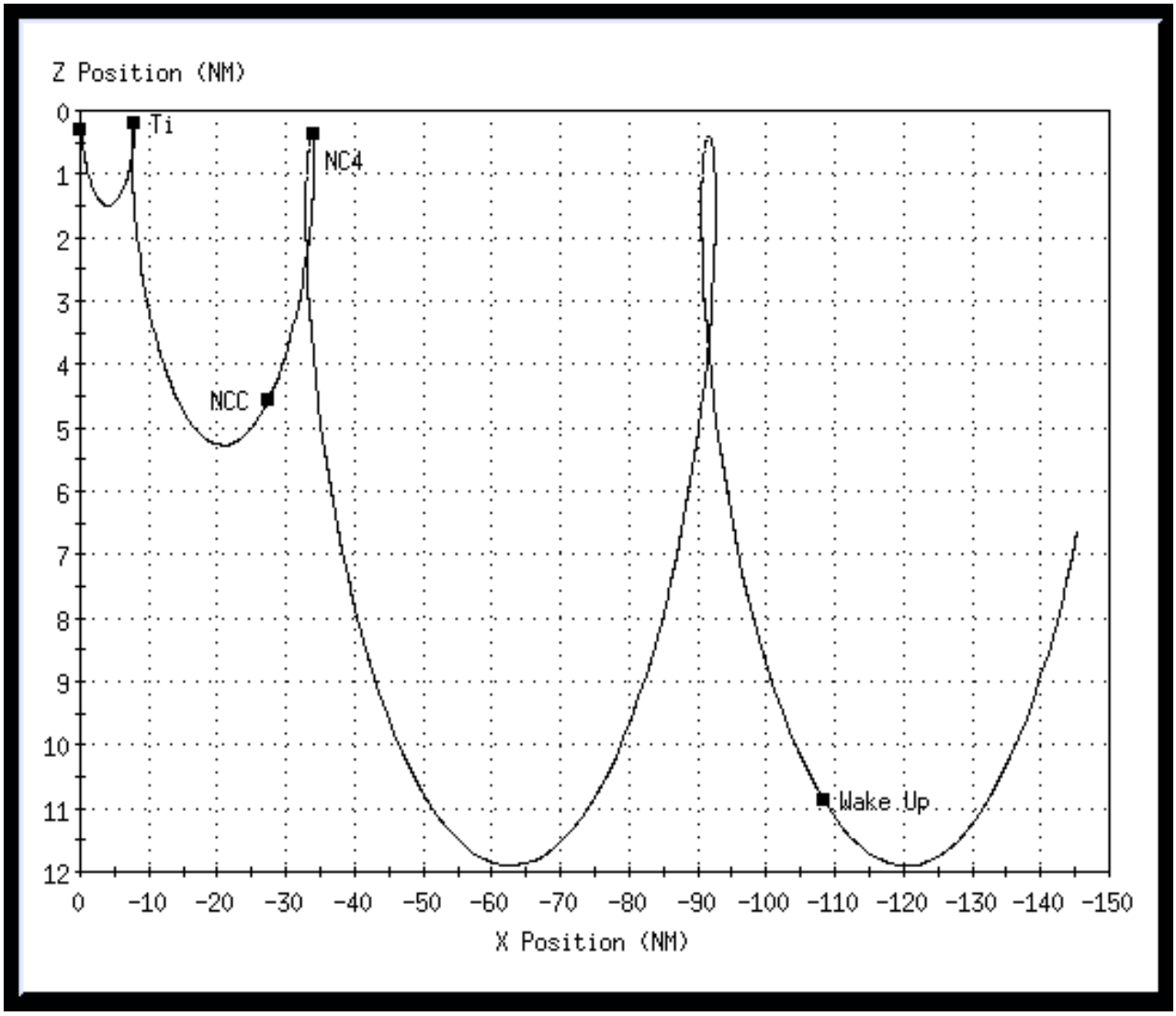

SHORT RANGE RELATIVE MOTION

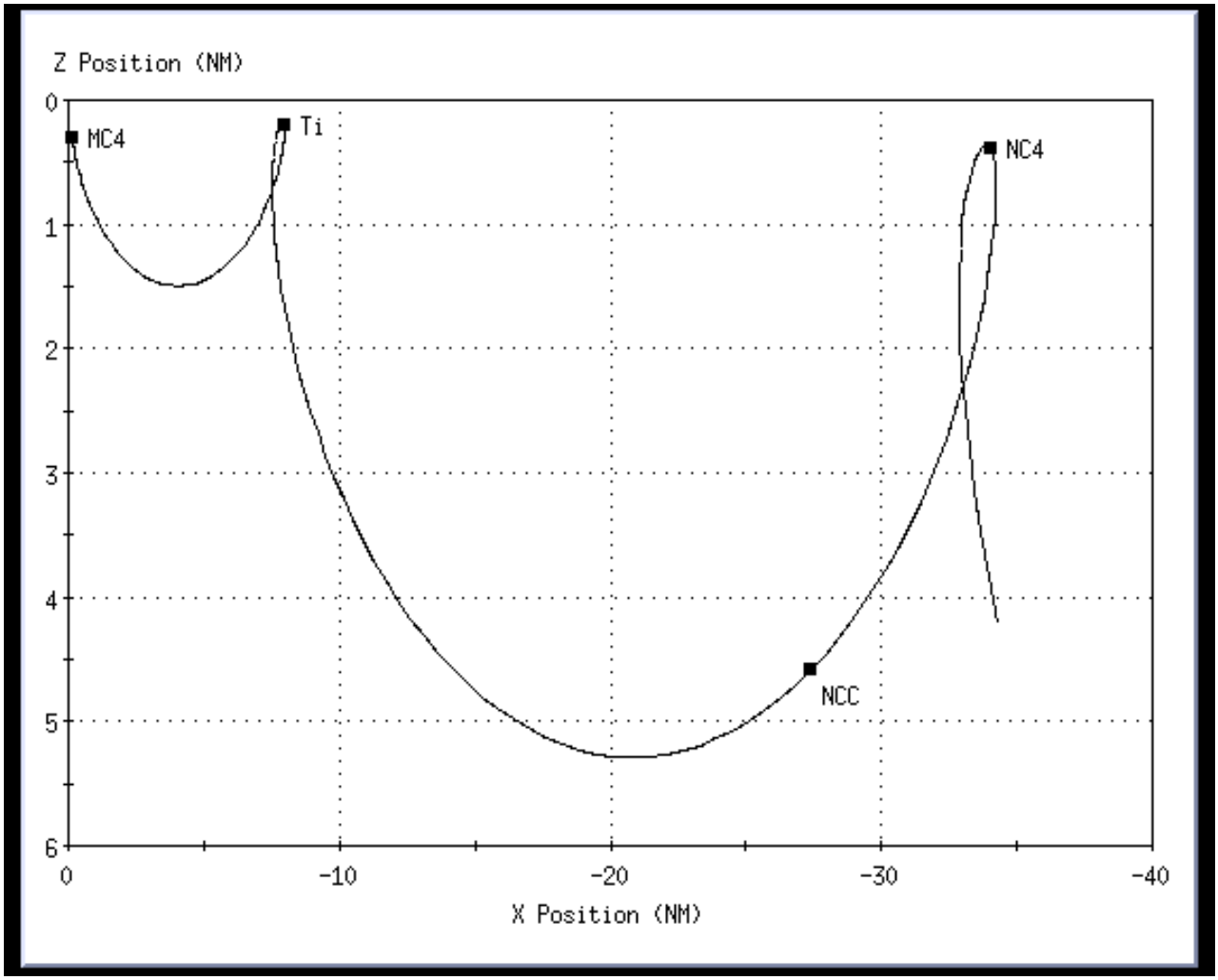

MSG 023 - FDO3 RELMO AND MNVR PADS

PRELIMINARY ORBIT MANEUVER PAD FOR NC-4 (RNDZ 3-2)

OMS BOTH	1	
L	2	
R	3	X
RCS SEL	4	
TV ROLL	5	000
TRIM LOAD P	6	(+)0.6
LY	7	(+)4.6
RY	8	(-)4.8
WT	9	247906
TIG	10	01/15:08:41.4
TGT PEG 7 ΔVX	19	(+)011.5
ΔVY	20	(+)000.0
ΔVZ	21	(+)000.1

RCS SEL: [ ] +X [ ] -X [ ] MULTI-AXIS

BURN ATT		
R	24	143
P	25	206
Y	26	326

ΔVTOT		011.5
TGO		00:15
VGO	X	(+)010.9
VGO	Y	(-)002.3
VGO	Z	(+)003.0

	HA	HP
TGT	186	(+)177

NOTES

OMS GMBL CK:

	PRE	POST-BURN
L PRI		X
L SEC		
R PRI		X
R SEC		
NONE	X	

RCS I'CNCT:
- [ ] L OMS → RCS
- [ ] R OMS → RCS
- [X] NONE

DOWN MODE OPTIONS:
- [ ] 2 OMS → 1 OMS
- [X] 1 OMS → RCS
- [ ] NONE

OMS HE REG TEST: [ ] NONE

	L GPC	L OP	L CL	R GPC	R OP	R CL
A					X	
B						X

-X RCS BURNS:

	BURN ATT				LVLH ATT		
P	15	N	/	A	R	N	/ A
Y	16	N	/	A	P	N	/ A
OM	17	N	/	A	Y	N	/ A

ORBIT BURN MONITOR

GPC FILL-INS 1 (3)
- [X] CRIT BURN
- [ ] NON-CRIT BURN

MAX TIG SLIP ___ MIN.
- [ ] DO NOT UPDATE TIG
- [ ] UPDATE TIG AFTER ___ MIN.

NOTES

Treat loss of GPC3 as 2nd gimbal fail on the right

PRELIMINARY ORBIT MANEUVER PAD FOR Ti (RNDZ 3-6)

OMS BOTH	1	
L	2	X
R	3	
RCS SEL	4	
TV ROLL	5	000
TRIM LOAD P	6	(+)0.6
LY	7	(+)4.6
RY	8	(-)4.8
WT	9	247615
TIG	10	01/16:38:37.0
TGT PEG 7 ΔVX	19	(+)006.7
ΔVY	20	(+)000.2
ΔVZ	21	(+)000.2

RCS SEL: +X / -X / MULTI-AXIS

BURN ATT

R	24	152
P	25	214
Y	26	346

ΔVTOT	006.7
TGO	00:08
VGO X	(+)006.3
VGO Y	(+)001.3
VGO Z	(+)001.7

	HA	HP
TGT	186	(+)180

NOTES

OMS GMBL CK:

	PRE	POST-BURN
L PRI		
L SEC		
R PRI		
R SEC		
NONE	X	X

RCS I'CNCT:
- [ ] L OMS → RCS
- [ ] R OMS → RCS
- [X] NONE

DOWN MODE OPTIONS:
- [ ] 2 OMS → 1 OMS
- [X] 1 OMS → RCS
- [ ] NONE

OMS HE REG TEST: [ ] NONE

	L GPC	L OP	L CL	R GPC	R OP	R CL
A		X				
B			X			

-X RCS BURNS:

	BURN ATT				LVLH ATT		
P 15	N	/	A	R	N	/	A
Y 16	N	/	A	P	N	/	A
OM 17	N	/	A	Y	N	/	A

ORBIT BURN MONITOR

GPC FILL-INS 1 (3)
- [X] CRIT BURN
- [ ] NON-CRIT BURN

TIG SLIP: If Ti not started by nominal TIG + ___ min (G34 as reqd), reload original TIG and go to Ti DELAY, 5-27

Max Ti DELAY TIG slip ___ min.
- [ ] DO NOT UPDATE TIG
- [ ] UPDATE TIG AFTER ___ MIN.

Ti DELAY

TGT PEG 7 ΔVX	19	(-)
ΔVY	20	(-)
ΔVZ	21	(-)

NEW Ti (BASETIME) 01/18:09:57.0

NOTES

Generic DOUG Startup

1. For stand-alone procedure review, perform {15-0681 1.301 DOUG Startup Procedure}, step 2 (Uplinked Procedures: POC)

2. For SSRMS real-time support, perform {15-0681 1.301 DOUG Startup Procedure}, step 1 (Uplinked Procedures: POC)
   2.1 Set SSC volume such that tones are audible.

3. Complete these steps as needed:
   3.1 Display > Puddle Plot Shoulder/Wrist
   3.2 Shift+V to bring up the Proximity display
   3.3 Display > Show SSRMS Target

Notes:
1. Use the Home Key to activate Page Up and Page Down scrolling of SSRMS targets. You will need to configure the SRMS position manually using JntSystems > RMS.
2. Use Page Up and Page Down keys to scroll through Target selections.
3. When using the Reconfig > STS118_EVA1, 2, 3, and 4 menu items while in stand-alone procedure review mode, both SSRMS positions and RMS positions might not match the most current joint angles. SSRMS and RMS targets from the Options menu will have the correct positions. In real-time mode, the PCS will drive SSRMS joint angle telemetry (but not Base LEE/PDGF location) and these reconfig options will only affect models for the rest of the mated stack. Also note that these reconfig options will move the JimboCam eyepoint, but the user can reconfigure that eyepoint as required.
4. Make sure CAPS LOCK is OFF to ensure that JimboCam translational commands function normally.

DOUG Setup for FD 3

4. Configure models:
   4.1 Reconfig > STS118_EVA1 > Pre_EVA1_Configuration

Procedure	Step	SSRMS	Comment
1.100 SSRMS MANEUVER TO S5 PREGRAPPLE	2	1.100 Step 2 - 13A.1 docking	
	3	1.100 Step 3 - S5 pregrapple	
1.110 SSRMS S5 GRAPPLE	4	1.110 Step 4 - S5 handoff	Reconfig > STS118_EVA1 > S5_Handoff_Position_(from _SRMS)

DOUG Setup for FD 4

5. Configure models:
   5.1 Reconfig > STS118_EVA1 > S5_Handoff_Position_(from_SRMS)
   5.2 JntSystems > RMS > to install viewing position joint angles

6. NOTE: Because of uncertainty in the actual positions of the S4 SARJ for this task in {15-0681 1.301 DOUG Startup Procedure}, step 1.9 (Uplinked Procedures: POC) select ‘SSRMS’ instead of ‘Station’. To manually position the S4 SARJ position command JntSystems > SOLAR_ARRAY_ALPHA > STBD to the position reported by MCC-H.

Procedure	Step	SSRMS	Comment
1.120 SSRMS S5 INSTALL	2	1.120 Step 2 - S5 Install intermediate	
	3	1.120 Step 3 - SJ to S5 pre-install	
	5	1.120 Step 5 - S5 launch lock removal	Reconfig > STS118_EVA1 > Remove/Replace_S5_INBD _Launch_Locks
	6	1.120 Step 6 - S5 softdock	Reconfig > STS118_EVA1 > Install_S5
	8	1.120 Step 8 - S5 GF clearance	
	9.1	1.120 Step 9.1 - PVRGF intermediate	
	9.2	1.120 Step 9.2 - PVRGF viewing	Use Reconfig > STS118_EVA1 menu options as desired to follow EV actions
1.130 SSRMS MANEUVER FOR TRANSLATE TO WS4	2	1.130 Step 2 - Stbd SAW clearance	
	3	1.130 Step 3 - SJ to MT translate intermediate	
	4	1.130 Step 4 - MT Translate	

<u>DOUG Setup for FD 5</u>

7. Configure models:
   - 7.1 Reconfig > STS118_EVA2 > Pre_EVA2_Configuration
   - 7.2 Reconfig > SSRMS > SSRMS_BASE_A
   - 7.3 Reconfig > SSRMS > SSRMS->MBS_PDGF1
   - 7.4 Reconfig > SSRMS > MT_to_WORKSITE_4
   - 7.5 (If FI required) JntSystems > RMS > to OBSS pregrapple at handoff joint angles
   - 7.6 (If FI not required) JntSystems > RMS > to precradle joint angles

If focused inspection is required, use the following table:

Procedure	Step	SSRMS	Comment
1.200 SSRMS OBSS UNBERTH AND HANDOFF	2	1.200 Step 2 - Berthed OBSS intermediate pregrapple	
	3	1.200 Step 3 - Berthed OBSS pregrapple	
	5	1.200 Step 5 - Berthed OBSS grappled	Reconfig > ORBITER_INSPECTION > OBSS_GF2_to_SSRMS
	9	1.200 Step 9 - OBSS low hover	
	10	1.200 Step 10 - OBSS clear UHF antenna	
	11	1.200 Step 11 - OBSS handoff	Reconfig > ORBITER_INSPECTION > OBSS_GF1_to_SRMS JntSystems > RMS > to OBSS grapple at handoff posn

	14.3	1.200 Step 14.3 - OBSS GF backoff	
1.210 SSRMS FOCUSED INSPECTION SUPPORT	1	1.210 Step 1 - OBSS survey support	
	2.1	1.210 Step 2.1 - SJ to FWD orbiter viewing	
	2.1	1.210 Step 2.1 - SJ to MID orbiter viewing	
	2.1	1.210 Step 2.1 - SJ to AFT orbiter viewing	
	4	1.210 Step 4 - OBSS handoff pregrapple	
1.220 SSRMS OBSS HANDOFF AND BERTH	3.4	1.220 Step 3.4 - OBSS grapple	Reconfig > ORBITER_INSPECTION > OBSS_GF2_to_SSRMS JntSystems > RMS > to precradle position
	4	1.220 Step 4 - OBSS clear UHF antenna	
	6	1.220 Step 6 - OBSS low hover	
	8	1.220 Step 8 - OBSS berthed	Reconfig > ORBITER_INSPECTION > OBSS_to_STBD_MPMs
	12.3	1.220 Step 12.3 - OBSS grapple fixture backoff	
1.230 SSRMS WALKOFF PDGF1 TO LAB PDGF	2	1.230 Step 2 - Lab PDGF pregrapple intermediate	
	3	1.230 Step 3 - SJ to Lab PDGF pregrapple	
	5	1.230 Step 5 - Lab PDGF grapple	
	6	1.230 Step 6 - MBS PDGF1 grapple	Reconfig > SSRMS > SSRMS_BASE_B Reconfig > SSRMS > SSRMS->LAB_PDGF
	7.4	1.230 Step 7.4 - MBS PDGF 1 pregrapple	
	8	1.230 Step 8 - LAB/ESP-2 clearance	
	9	1.230 Step 9 - Overnight park position	

If focused inspection is NOT required, use the following table:

Procedure	Step	SSRMS	Comment
2.200 SSRMS MANEUVER TO LAB PDGF PREGRAPPLE INTERMEDIATE - NO FI	1	2.220 Step 1 - MT Translate	
	2	2.220 Step 2 - (No FI) Lab PDGF pregrapple intermediate	
1.230 SSRMS WALKOFF PDGF1 TO LAB PDGF	3	1.230 Step 3 - SJ to Lab PDGF pregrapple	
	5	1.230 Step 5 - Lab PDGF grapple	
	6	1.230 Step 6 - MBS PDGF1 grapple	
	7.4	1.230 Step 7.4 - MBS PDGF 1 pregrapple	Reconfig > SSRMS > SSRMS_BASE_B Reconfig > SSRMS > SSRMS->LAB_PDGF
	8	1.230 Step 8 - LAB/ESP-2 clearance	
	9	1.230 Step 9 - Overnight park position	

<u>DOUG Setup for FD 6</u>

8. Configure models:
   - 8.1 Reconfig > STS118_EVA2 > Pre_EVA2_Configuration
   - 8.2 Verify using JntSystems > RMS > Get Current Pos that the RMS is in the viewing position, else configure as appropriate

Procedure	Step	SSRMS	Comment
1.300 SSRMS CMG R&R EVA SUPPORT	2	1.300 Step 2 - Airlock approach	
	3	1.300 Step 3 - SJ to APFR install/ingress	From this point on use Reconfig > STS118_EVA2 menu options (in sequence) to follow EV actions.
	4	1.300 Step 4 - SJ to airlock approach	
	5	1.300 Step 5 - Payload bay access	
	6	1.300 Step 6 - ESP-3 CMG/FRAM removal	
	6	1.300 Step 6 - Payload bay access	
	7	1.300 Step 7 - ESP-2 clearance	
	8	1.300 Step 8 - ESP-2 CMG/FRAM install	
	9.1	1.300 Step 9.1 - ESP-2 clearance	
	9.1	1.300 Step 9.1 - Z1 intermediate 1	
	9.2	1.300 Step 9.2 - Z1 intermediate 2	
	9.3	1.300 Step 9.3 - Z1 access	
	10	1.300 Step 10 - CMG handoff	
	10	1.300 Step 10 - APFR egress	
	10	1.300 Step 10 - CMG handoff 2	

	10	1.300 Step 10 - Z1 access	
	11.1	1.300 Step 11.1 - Z1 intermediate 2	
	11.2	1.300 Step 11.2 - Z1 intermediate 1	
	11.3	1.300 Step 11.3 - ESP-2 clearance	
	12	1.300 Step 12 - Failed CMG install	
	12	1.300 Step 12 - ESP-2 clearance	
	13.1	1.300 Step 13.1 - Airlock approach	
	13.2	1.300 Step 13.2 - SJ to APFR egress/removal	
	14.1	1.300 Step 14.1 - Airlock backoff	
	14.2	1.300 Step 14.2 - Airlock clearance	
1.400 SSRMS WALKOFF LAB PDGF TO PDGF2	2	1.400 Step 2 - Z1 intermediate 1	
	3	1.400 Step 3 - PDGF2 intermediate	
	4	1.400 Step 4 - SJ to MBS PDGF2 pregrapple	
	5	1.400 Step 5 - MBS PDGF 2 grapple	

<u>DOUG Setup for FD 7</u>

9. Configure models:
   - 9.1 Reconfig > STS118_EVA3 > Pre_EVA3_Configuration
   - 9.2 Reconfig > SSRMS > SSRMS_BASE_A
   - 9.3 Reconfig > SSRMS > SSRMS->MBS_PDGF2
   - 9.4 Reconfig > SSRMS > MT_to_WORKSITE_7

Procedure	Step	SSRMS	Comment
1.400 SSRMS WALKOFF LAB PDGF TO PDGF2	8	1.400 Step 8 - Lab PDGF pregrapple	
	9	1.400 Step 9 - SJ to ESP-3 pregrapple intermediate	
	10	1.400 Step 10 - ESP-3 pregrapple	JntSystems > RMS > to ESP-3 handoff joint angles Reconfig > ESP3 > ESP3_to_SRMS
1.410 SSRMS ESP3 HANDOFF	3	1.410 Step 3 - ESP-3 handoff	Reconfig > ESP3 > ESP3_to_SSRMS JntSystems > RMS > to ESP3 install viewing joint angels
1.420 SSRMS ESP-3 INSTALL	2	1.420 Step 2 - ESP-3 preinstall	
	5	1.420 Step 5 - ESP-3 RTL	
	6	1.420 Step 6 - ESP-3 Install	Reconfig > ESP3 > ESP3_to_P3_UCCAS_Zenith
	8	1.420 Step 8 - ESP-3 GF backoff	
1.430 SSRMS ESP3 MANEUVER FOR TRANSLATE TO WS4	2	1.430 Step 2 - MT Translate	

DOUG Setup for FD 8

10. Configure models:
    10.1 Reconfig > STS118_EVA3 > Pre_EVA3_Configuration
    10.2 Verify using JntSystems > RMS > Get Current Pos that the RMS is in the viewing position, else configure as appropriate

Procedure	Step	SSRMS	Comment
1.500 SSRMS MANEUVER TO SASA START POSITION	2	1.500 Step 2 - SASA start intermediate	
	2	1.500 Step 2 - SJ to SASA start	
1.510 SSRMS SASA RELOCATE	2.1	1.510 Step 2.1 - APFR ingress	From this point on use Reconfig > STS118_EVA3 menu options to (in sequence) to follow EV actions.
	2.2	1.510 Step 2.2 - S1 clearance	
	3	1.510 Step 3 - P6 intermediate	
	4.1	1.510 Step 4.1 - SJ to SASA Base Bolt	
	4.3	1.510 Step 4.3 - SJ to P1 JOCAS setup	
	5	1.510 Step 5 - P1 Approach	
	6	1.510 Step 6 - SASA Install	
	7	1.510 Step 7 - APFR reconfig	Verify that JntSystems > APFR_7 > is 12/PP/A/6 (if using the EVA3 menu items).
	7.1	1.510 Step 7.1 - EVA3 intermediate	
	7.2	1.510 Step 7.2 - CETA cart clearance	
	7.3	1.510 Step 7.3 - APFR egress/ingress	
1.520 SSRMS CETA CART RELOCATE	2	1.520 Step 2 - Port Zenith clearance	
	3	1.520 Step 3 - Zenith intermediate	
	4	1.520 Step 4 - Starboard zenith clearance	
	5	1.520 Step 5 - CETA cart delivery	
	6	1.520 Step 6 - Starboard zenith clearance	
	7	1.520 Step 7 - Zenith intermediate	
	8	1.520 Step 8 - Port Zenith clearance	
	9	1.520 Step 9 - CETA cart pickup	
	10	1.520 Step 10 - Port Zenith clearance	
	11	1.520 Step 11 - Zenith intermediate	
	12	1.520 Step 12 - Starboard Zenith intermediate	
	13	1.520 Step 13 - CETA Cart Delivery	
	14	1.520 Step 14 - APFR removal	
	14	1.520 Step 14 - SSRMS clearance	
	15	1.520 Step 15 - SJ to SSRMS park	