STS-115/12A

FD 02 Execute Package

MSG	Page(s)	Title
004A	1 - 2	FD02 Summary Timeline **(pdf)**
002A	3 - 13	FD02 Flight Plan Revision **(pdf)**
003A	14 - 15	FD02 Mission Summary **(pdf)**
005B	16 - 26	12A Photo/TV Stowage Matrix **(pdf)**
006	27 - 28	5.501 Attitude Control Constraints for P3P4 Install **(pdf)**
007	29	RCS Jet Reprioritization **(pdf)**
008	30 - 31	FD02 Flat Fields Procedure **(pdf)**
009	32 - 35	FD02 OBSS LDRI RCC SURVEY - STBD UNDOCKED Procedure Up
010A	36	FD02 Water Activity Summary **(pdf)**
011A	37 - 53	Ref Data Flight Supplement Updates **(pdf)**

Approved by FAO: *M. Scheib*

Last Updated: Sep 10 2006 5:14AM GMT
JEDI *(**J**oint **E**xecute package **D**evelopment and **I**ntegration), v2.04.0003*

FD02

GMT 09/10/06 (253)

MET Day 000

12 13 14 15 16 17 18 19 20 21 22 23 001/00

04 05 06 07 08 09 10 11 12 13 14 15

STS-115

CDR JETT	SLEEP	POST SLEEP	RCS	HTR*	CABT	OMS BURN	NC2	MNVR	ZLV	JETPR	POST SLEEP	IMU	POST SLEEP	CRYO O2 SNSR CK	MNVR	STBD	H2O CWC SU & FILL #1	WSB	MNVR	NOSE	CTWC	TERM	OMS POD	MEAL	FILTER CLEANING	MNVR	PORT	EXERCISE	REG*	MNVR*	REG*
PLT FERGUSON	SLEEP	POST SLEEP	OMS BURN	POST SLEEP	OBSS UNBERTH	FLAT	FIELD	OBSS STBD SURVEY	NOSE CAP SURVEY	MEAL	OBSS PORT SURVEY	OBSS BERTH	♣																		
MS1 TANNER	SLEEP	POST SLEEP	P/TV01 VIDEO SETUP	EMU C/O PREP	EMU C/O	MEAL	EVA PREP FOR XFR-ISS	P/TV01 VIDEO SETUP																							
MS2 BURBANK	SLEEP	POST SLEEP	PGSC SETUP (PART II)	OBSS UNBERTH	FLAT	FIELD	OBSS STBD SURVEY	NOSE CAP SURVEY	MEAL	OBSS PORT SURVEY	OBSS BERTH	⊕																			
MS3 PIPER	SLEEP	POST SLEEP	PGSC SETUP (PART II)	POST SLEEP	EMU C/O PREP	EMU C/O	MEAL	EVA PREP FOR XFR-ISS	XFER PREP																						
MS4 MACLEAN	SLEEP	POST SLEEP	OBSS UNBERTH	FLAT	FIELD	OBSS STBD SURVEY	NOSE CAP SURVEY	MEAL	OBSS PORT SURVEY	OBSS BERTH	♦																				

DAY/NIGHT

ORBIT	9	10	11	12	13	14	15	16
DAILY ORBIT	14	15	16	1	2	3	4	5

TDRS W -171.0 / E -46.0 / Z -275.0

ORB ATT: -ZLV -XVV; NC2; BIAS -ZLV -YVV; STBD SURVEY; NOSE CAP SURVEY; PORT SURVEY; BIAS -ZLV -XVV

*CONFIG

*OPEN

NOTES

♣UPPR SURFA
⊕UPPR SURFA
♦UPPR SURFA
*CLOSE
*EE Survey

FD02

GMT 09/10/06 (253) 16 17 18 19 20 21 22 23 09/11 01 02 03

MET Day 001 001/00 01 02 03 04 05 06 07 08 09 10 11 12

STS-115

CDR JETT	PRE SLEEP	PMC A/G	C/L CMR INSTL	MNVR	INRTL	PRE SLEEP	NC3 RCS BURN	MNVR	ZLV	I-CNCT	FUCTUR	FLOAD	PRE SLEEP	SLEEP									
PLT FERGUSON	UPPR SURFACE SURVEY		PRE SLEEP	LDRI DNLK		PRE SLEEP	RCS BURN	PRE SLEEP						SLEEP									
MS1 TANNER			C/L CMR INSTL	ODS RING EXT		PRE SLEEP		LDRI DNLK	PRE SLEEP					SLEEP									
MS2 BURBANK	UPPR SURFACE SURVEY		WLES*	RNDZ TOOLS C/O		PRE SLEEP								SLEEP									
MS3 PIPER	XFER PREP			RNDZ TOOLS C/O		PRE SLEEP								SLEEP									
MS4 MACLEAN	UPPR SURFACE SURVEY			ODS RING EXT		PRE SLEEP								SLEEP									

DAY/NIGHT

ORBIT	17	18	19	20	21	22	23	24
DAILY ORBIT	6	7	8	9	10	11	12	13

TDRS W -171.0 / E -46.0 / Z -275.0

ORB ATT: INRTL COMM — NC3 — -ZLV -XVV

*RNDZ PREP

NOTES

MSG INDEX

MSG NO.	TITLE
02	FD02 Flight Plan Revision
03	FD02 Mission Summary (13-1175)
04	FD02 Summary Timeline
05	12A Photo/TV Stowage Matrix (13-1060B)
06	5.501 Attitude Control Constraints for P3P4 Install (13-1176)
07	RCS Jet Reprioritization
08	FD02 Flat Fields Procedure
09	FD02 OBSS LDRI RCC SURVEY - STBD UNDOCKED Procedure Update
10	FD02 Water Activity Summary
11	Ref Data Flight Supplement Updates

1. OBSS UNBERTH (PDRS, OBSS NOM OPS), step 9b on FS 3-8 should be updated as follows:

   WAS:

   VIDEO OUT MON 1 pb - push

   IS:

   VIDEO OUT MUX 1 L pb - push (MIDDECK lt on)

2. MSG009 contains replacement pages for the PDRS book. Please replace pages FS 3-35 through FS 3-38.

3. MSG 011 contains replacement pages for section 1 of the REF Data FS book. Please replace pages FS 1-1 through FS 1-16.

4. 12A Photo\TV Stowage Matrix Message 005B (13-1060B) contains the stowage information for the ISS Photo\TV hardware required for shuttle Photo\TV procedures throughout the flight.

5. FES Shutdown During Ascent

   Prior to FES activation at SRB Sep, the Evap Out Temps for both Freon Loops along with the Hi Load Duct Temps dropped significantly. This was caused by water in the ducts from the recent rains. This water along with the water vapor in the air inside the FES cores and ducts evaporated and caused the drop in temps. This is an explained condition seen on many flights. The FES community uses the term "precooling" to describe this phenomenon. Both sets of Hi Load duct heaters were selected (A/B) to warm up the ducts to prevent ice formation. This action was successful in recovering the Hi Load duct temperatures.

   Post SRB Sep the FES was commanded ON, but the Evap Out Temps were not yet stable due to the "precooling" effect and caused the FES to shutdown. Once FES Pri A was cycled OFF and back to GPC, the FES worked nominally throughout the remainder of ascent and Post Insertion and continues to perform nominally.

6. REPLACE PAGES 3-8 THROUGH 3-17.

STS-115 (FD02)

GMT Date 09/10 (253) | TDRS W E Z | DORB ORB | MET Day 000 | STS ATI | CDR JETT | PLT FERGUSON | MCC | NOTES

12:00

04:00

13:00 SLEEP | SLEEP

05:00

14:00 POST-SLEEP ACTIVITY (ORB OPS, CREW SYS) | POST-SLEEP ACTIVITY (ORB OPS, CREW SYS) √ HUM SEP for H2O Accumulation

06:00

15:00 RCS REGULATOR RCNFG (ORB OPS, RCS)

RCS/OMS HEATER CONFIG A

CABIN TEMP CNTL RECONFIG 2(1) (ORB OPS, ECLS)

ON-ORBIT OMS BURN (ORB OPS, OMS) | ON-ORBIT OMS BURN (ORB OPS, OMS) | UPDATE ORBITAL MNVR PAD

07:00 < NC2 TIG (0/15:52:12) | < NC2 TIG (0/15:52:12)

16:00 MNVR (TRK) BIAS -ZLV, -YVV TG=2 BV=3 OM=110 A1/AUTO/VERN Init TRK | POST-SLEEP ACTIVITY (ORB OPS, CREW SYS)

FD02 EZ ACTIVITIES:
OCAC FILTER Inspect
HARD Reboot PGSCs (Not KFX,DOUG)

A A14 RCS/OMS HTR L POD - A OFF
- B AUTO
R POD - A OFF
- B AUTO

STS-115 (FD02)

GMT Date 09/10 (253) | TDRS W E Z | DORB 14 15 16 | ORB 9 10 11 | MET Day 000 | STS ATI -ZLV -XVV NC2

MS1/EV1 TANNER | MS2/EV3 BURBANK | MS3/EV2 PIPER | MS4/EV4 MACLEAN | NOTES

12:00
04:00
05:00
06:00
07:00
13:00
14:00
15:00
16:00

SLEEP (MS1/EV1, MS2/EV3, MS3/EV2, MS4/EV4)

POST-SLEEP ACTIVITY (ORB OPS, CREW SYS) (MS1/EV1)

POST-SLEEP ACTIVITY (ORB OPS, CREW SYS) (MS2/EV3)

POST-SLEEP ACTIVITY (ORB OPS, CREW SYS) (MS3/EV2)

POST-SLEEP ACTIVITY (ORB OPS, CREW SYS) (MS4/EV4)

PGSC SETUP (PART II)
Setup remaining PGSCs
PGSC NETWORK
(ORB OPS, PGSC)
PGSC HARD DISK LATE UPDATE
(ORB OPS, PGSC)

STS-115 (FD02)

GMT Date 09/10 (253) | TDRS W E Z | DORB | ORB | MET Day 000 | STS ATT

CDR JETT

16:00
- MNVR (TRK) BIAS -ZLV, -YVV
  TG=2 BV=3 OM=110 A1/AUTO/VERN Init TRK
- JET REPRIORITIZATION
  REF MSG 007
- POST-SLEEP ACTIVITY
  (ORB OPS, CREW SYS)

BIAS -ZLV -YVV

- IMU STAR OF OPPTY ALIGN (ORB OPS)
- POST-SLEEP ACTIVITY
  (ORB OPS, CREW SYS)

17:00

- CRYO 02 TK HTR SNSR CK
  (ORB OPS, EPS)
- MNVR STBD SURVEY
  TG=4 BV=5 P=0 Y=49 OM=145
  A14/AUTO/VERN Init TRK on MCC GO

18:00

STBD SURVEY

- SHUTTLE/ISS H2O CNTR FILL (Init #1)
  (ORB OPS, ECLS)
  Ref MSG 010
- R2 BLR CNTLR/HTR (three) - B

19:00

- MNVR NOSE CAP SURVEY
  TG=4 BV=5 P=331 Y=0 OM=265
  A14/AUTO/VERN Init TRK on MCC GO
- SHUTTLE/ISS H2O CNTR FILL
  (ORB OPS, ECLS)
  Terminate CWC fill
- P/TV08 EXTERNAL SRVY (S/U) (P/TV, SCENES)
  Step 1-Sunlit OMS POD
- P/TV08 EXTERNAL SRVY (OPS)
  (P/TV, SCENES) Item 1

MEAL

20:00

PLT FERGUSON

- POST-SLEEP ACTIVITY
  (ORB OPS, CREW SYS)
- OBSS UNBERTH
  (PDRS, OBSS NOM OPS)
  REF MSG 002, Item 1
- OBSS ITVC/LDRI FLAT FIELD
  (PDRS, OBSS NOM OPS)
  REF MSG 008
- OBSS LDRI RCC SURVEY - STBD
  (PDRS, OBSS NOM OPS)
  REF MSG 009
- OBSS LDRI RCC SURVEY-NOSE CAP
  (PDRS, OBSS NOM OPS)

MCC

NOTES

- UPLINK
  β21+Mask+
  Box A2
  -27<AZ<110
  -90<EL<0
  Box A3
  -81<AZ<110
  -67<EL<-10
- DTV-ON
- UPLINK
  β21+Mask+
  Box A4
  -122<AZ<110
  -90<EL<45
- UPLINK
  β21 ONLY

08:00 09:00 10:00 11:00

DORB: 16, 11, 1, 12, 2, 13, 3, 14

STS-115 (FD02)

GMT Date 09/10 (253) | W | TDRS E | Z | DORB | ORB | MET Day 000 | STS ATI | MS1/EV1 TANNER | MS2/EV3 BURBANK | MS3/EV2 PIPER | MS4/EV4 MACLEAN | NOTES

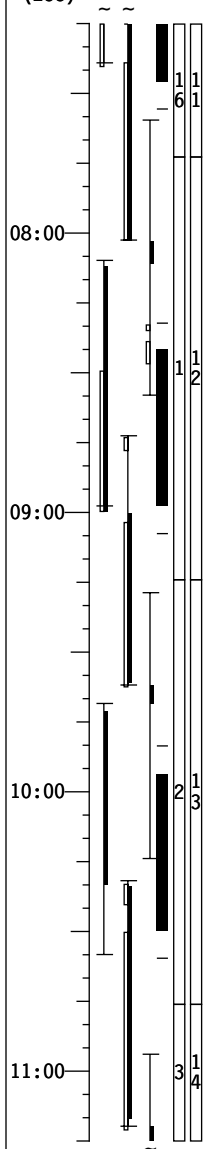

MS1/EV1 TANNER

16:00
POST-SLEEP ACTIVITY
(ORB OPS, CREW SYS)

BIAS-ZLV-YVV
P/TV01 VIDEO SETUP
(PHOTO/TV, SCENES)

WVS INITIAL SETUP w/o ERCAs
(PHOTO/TV, WVS)
Steps 1-3,5

17:00

18:00
EMU CHECKOUT PREP
(EVA, AIRLOCK CONFIG)
Prepare AIRLOCK for checkout

STBD SURVEY
EMU CHECKOUT
(EVA, CHECKOUTS)
Perform for 2 EMUs

19:00

20:00

MS2/EV3 BURBANK

PGSC SETUP (PART II)
Setup remaining PGSCs
PGSC NETWORK
(ORB OPS, PGSC)
DCS FILE DNLK
(PHOTO/TV, DCS 760)
ET PHOTO DNLK
PGSC HARD DISK LATE UPDATE

OBSS UNBERTH
(PDRS, OBSS NOM OPS)
REF MSG 002, Item 1

OBSS ITVC/LDRI FLAT FIELD
(PDRS, OBSS NOM OPS)
REF MSG 008

OBSS LDRI RCC SURVEY - STBD
(PDRS, OBSS NOM OPS)
REF MSG 009

OBSS LDRI RCC SURVEY-NOSE CAP
(PDRS, OBSS NOM OPS)

MS3/EV2 PIPER

PGSC SETUP (PART II)
Setup remaining PGSCs
PGSC NETWORK
(ORB OPS, PGSC)
PGSC HARD DISK LATE UPDATE
(ORB OPS, PGSC)

POST-SLEEP ACTIVITY
(ORB OPS, CREW SYS)

EMU CHECKOUT PREP
(EVA, AIRLOCK CONFIG)
Prepare AIRLOCK for checkout

EMU CHECKOUT
(EVA, CHECKOUTS)
Perform for 2 EMUs

MS4/EV4 MACLEAN

POST-SLEEP ACTIVITY
(ORB OPS, CREW SYS)

OBSS UNBERTH
(PDRS, OBSS NOM OPS)
REF MSG 002, Item 1

OBSS ITVC/LDRI FLAT FIELD
(PDRS, OBSS NOM OPS)
REF MSG 008

OBSS LDRI RCC SURVEY - STBD
(PDRS, OBSS NOM OPS)
REF MSG 009

OBSS LDRI RCC SURVEY-NOSE CAP
(PDRS, OBSS NOM OPS)

STS-115 (FD02)

GMT Date 09/10 (253) | TDRS W E Z | DORB | ORB | MET Day 000 | STS ATI

12:00 13:00 14:00 15:00

3 14 4 15 5 16

20:00 21:00 22:00 23:00 00:00

NOSE CAP SURVEY

PORT SURVEY

CDR JETT

MEAL

FILTER CLEANING
(IFM, SCHEDULED MAINTENANCE)

MNVR PORT SURVEY
TG=4 BV=5 P=0 Y=334 OM=200
A14/AUTO/VERN Init TRK on MCC GO

EXERCISE

MO10W 14.7 CAB REG INLET SYS 1 vlv - OP
CAUTION: Do not remain in WCS area during high flow

MNVR (TRK) BIAS -ZLV, -XVV A
MO10W 14.7 CAB REG INLET SYS 1 vlv - CL

PLT FERGUSON

OBSS LDRI RCC SURVEY-NOSE CAP
(PDRS, OBSS NOM OPS)

MEAL

OBSS LDRI RCC SURVEY - PORT
(PDRS, OBSS NOM OPS)

OBSS BERTH
(PDRS, OBSS NOM OPS)

SRMS EE CAM CREW SRVY
(PDRS, OBSS NOM OPS)

MCC

A MNVR (TRK) BIAS -ZLV, -XVV
TG=2 BV=3 OM=15
A1/AUTO/VERN Init TRK

NOTES

UPLINK
β21+Mask+
Box A2
-27<AZ<110
-90<EL<0

UPLINK
β21+Mask+
Box A6
-93<AZ<110
-90<EL<32
Box A7
-149<AZ<44
32<EL<83

REPLANNED

STS-115 (FD02)

GMT Date 09/10 (253) | TDRS W E Z | DORB | ORB | MET Day 000 | STS ATI

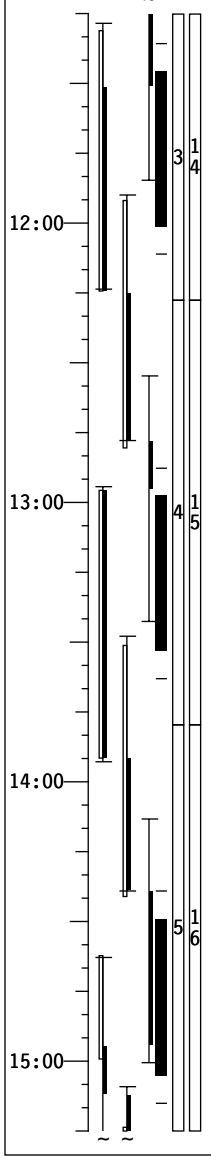

MET	STS ATI	MS1/EV1 TANNER	MS2/EV3 BURBANK	MS3/EV2 PIPER	MS4/EV4 MACLEAN	NOTES
20:00	NOSE CAP SURVEY	MEAL	OBSS LDRI RCC SURVEY-NOSE CAP (PDRS, OBSS NOM OPS)	MEAL	OBSS LDRI RCC SURVEY-NOSE CAP (PDRS, OBSS NOM OPS)	
21:00		EVA PREP FOR TRANSFER TO ISS (EVA, AIRLOCK CONFIG) Prepare EMU for Transfer and packing EVA bags. Rebundle EMUs as time allows.	MEAL	EVA PREP FOR TRANSFER TO ISS (EVA, AIRLOCK CONFIG) Prepare EMU for Transfer and packing EVA bags. Rebundle EMUs as time allows.	MEAL	
22:00	PORT SURVEY		OBSS LDRI RCC SURVEY - PORT (PDRS, OBSS NOM OPS)		OBSS LDRI RCC SURVEY - PORT (PDRS, OBSS NOM OPS)	
23:00		P/TV01 VIDEO SETUP (PHOTO/TV, SCENES)	OBSS BERTH (PDRS, OBSS NOM OPS)	TRANSFER PREP Ref. Transfer List	OBSS BERTH (PDRS, OBSS NOM OPS)	
00:00			SRMS EE CAM CREW SRVY (PDRS, OBSS NOM OPS)		SRMS EE CAM CREW SRVY (PDRS, OBSS NOM OPS)	

STS-115 (FD02)

GMT Date 09/10 (253) | TDRS W E Z | DORB 6 7 8 | ORB 17 18 19

MET Day 001 | STS ATI

MET	CDR JETT	PLT FERGUSON	MCC	NOTES
00:00	PRE-SLEEP ACTIVITY (ORB OPS, CREW SYS)	SRMS EE CAM CREW SRVY (PDRS, OBSS NOM OPS)		
BIAS				
-ZLV	06 √UHF MODE - OFF PRIVATE MEDICAL CONFERENCE			
16:00	C/L CAMR INSTALL (PHOTO/TV, C/L CAMR)	PRE-SLEEP ACTIVITY (ORB OPS, CREW SYS)		UPLINK β21+Mask
-XVV 01:00				
	MNVR INRTL COMM ATT TG=4 BV=5 P=0 Y=90 OM=210 A1/AUTO/VERN Init TRK PRE-SLEEP ACTIVITY (ORB OPS, CREW SYS)	PLAYBACK (DIGITAL) (PHOTO/TV, CUE CARD) LDRI SURVEYS KU TDRW (01:20 - 01:55)		
17:00				
INRTL COMM 02:00		PRE-SLEEP ACTIVITY (ORB OPS, CREW SYS)		
18:00				
	ON-ORBIT +X RCS BURN, MM202 (ORB OPS, RCS) In Step 1, establish L OMS to RCS I'CNCT	ON-ORBIT +X RCS BURN, MM202 (ORB OPS, RCS) In Step 1, establish L OMS to RCS I'CNCT		
NC3 03:00	< NC3 TIG (1/03:12:47)	< NC3 TIG (1/03:12:47)		
	MNVR (TRK) -ZLV, -XVV TG=2 BV=3 OM=0 A1/AUTO/VERN Init TRK I'CNCT TK SWITCH: FROM L OMS TO R OMS FEED FUTURE LOAD MNVR (TRK) -ZLV +YVV TG=2 BV=3 OM=270 A1/AUTO/VERN Init TRK (001/13:05)	PRE-SLEEP ACTIVITY (ORB OPS, CREW SYS) √ HUM SEP for H2O Accumulation (OPCL, RCS)		DTV-OFF
19:00				
04:00	PRE-SLEEP ACTIVITY (ORB OPS, CREW SYS)			

REPLANNED

STS-115 (FD02)

GMT Date 09/10 (253) | TDRS W E Z | DORB | ORB | MET Day 001 | STS ATI

MS1/EV1 TANNER	MS2/EV3 BURBANK	MS3/EV2 PIPER	MS4/EV4 MACLEAN	NOTES
	SRMS EE CAM CREW SRVY (PDRS, OBSS NOM OPS)	TRANSFER PREP Ref. Transfer List	SRMS EE CAM CREW SRVY (PDRS, OBSS NOM OPS)	
C/L CAMR INSTALL (PHOTO/TV, C/L CAMR)	PREP WLES FOR RNDZ TOOLS C/O (ORB OPS, WLE SENSORS)			
	RNDZ TOOLS CHECKOUT (RNDZ, RNDZ TOOLS)	RNDZ TOOLS CHECKOUT (RNDZ, RNDZ TOOLS)		UPLINK TGT SV
DOCKING MECH INITIALIZATION DOCKING MECH POWERUP DOCKING RING EXTENSION DOCKING MECH POWERDOWN (RNDZ, APDS NOMINAL)			DOCKING MECH INITIALIZATION DOCKING MECH POWERUP DOCKING RING EXTENSION DOCKING MECH POWERDOWN (RNDZ, APDS NOMINAL)	
PRE-SLEEP ACTIVITY (ORB OPS, CREW SYS)				UPLINK CNFG 763 TFL 192
	PRE-SLEEP ACTIVITY (ORB OPS, CREW SYS)	PRE-SLEEP ACTIVITY (ORB OPS, CREW SYS)	PRE-SLEEP ACTIVITY (ORB OPS, CREW SYS)	
PLAYBACK (DIGITAL) (PHOTO/TV, CUE CARD) LDRI SURVEYS KU TDRW (02:38 - 03:04) (03:17 - 03:30)				UPLINK CNFG 762 TFL 188
PRE-SLEEP ACTIVITY (ORB OPS, CREW SYS)				

Time scale: 16:00, 17:00, 18:00, 19:00; 00:00, 01:00, 02:00, 03:00, 04:00

STS ATI: BIAS -ZLV -XVV; INRTL COMM; NC3

ORB: 6 17; 7 18; 8 19

STS-115 (FD02)

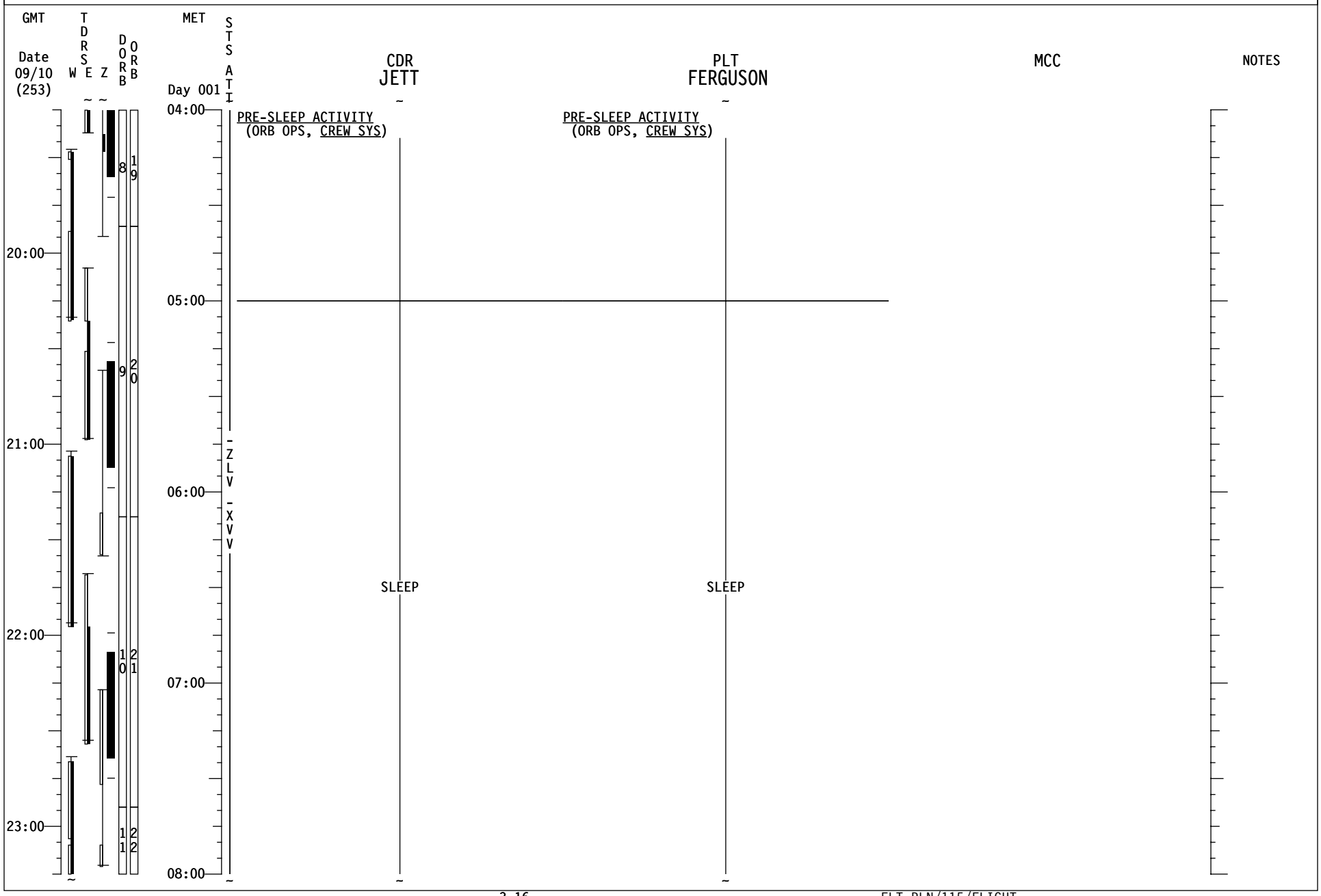
GMT
Date
09/10
(253)
W
T
D
R
S
E
Z
D
O
R
B
O
R
B
MET
Day 001
S
T
S
A
T
I
-
Z
L
V
-
X
V
V
CDR
JETT
PLT
FERGUSON
MCC
NOTES
PRE-SLEEP ACTIVITY
(ORB OPS, CREW SYS)
PRE-SLEEP ACTIVITY
(ORB OPS, CREW SYS)
SLEEP
SLEEP
04:00
05:00
06:00
07:00
08:00
20:00
21:00
22:00
23:00
8
9
10
11
19
20
21
22

REPLANNED

STS-115 (FD02)

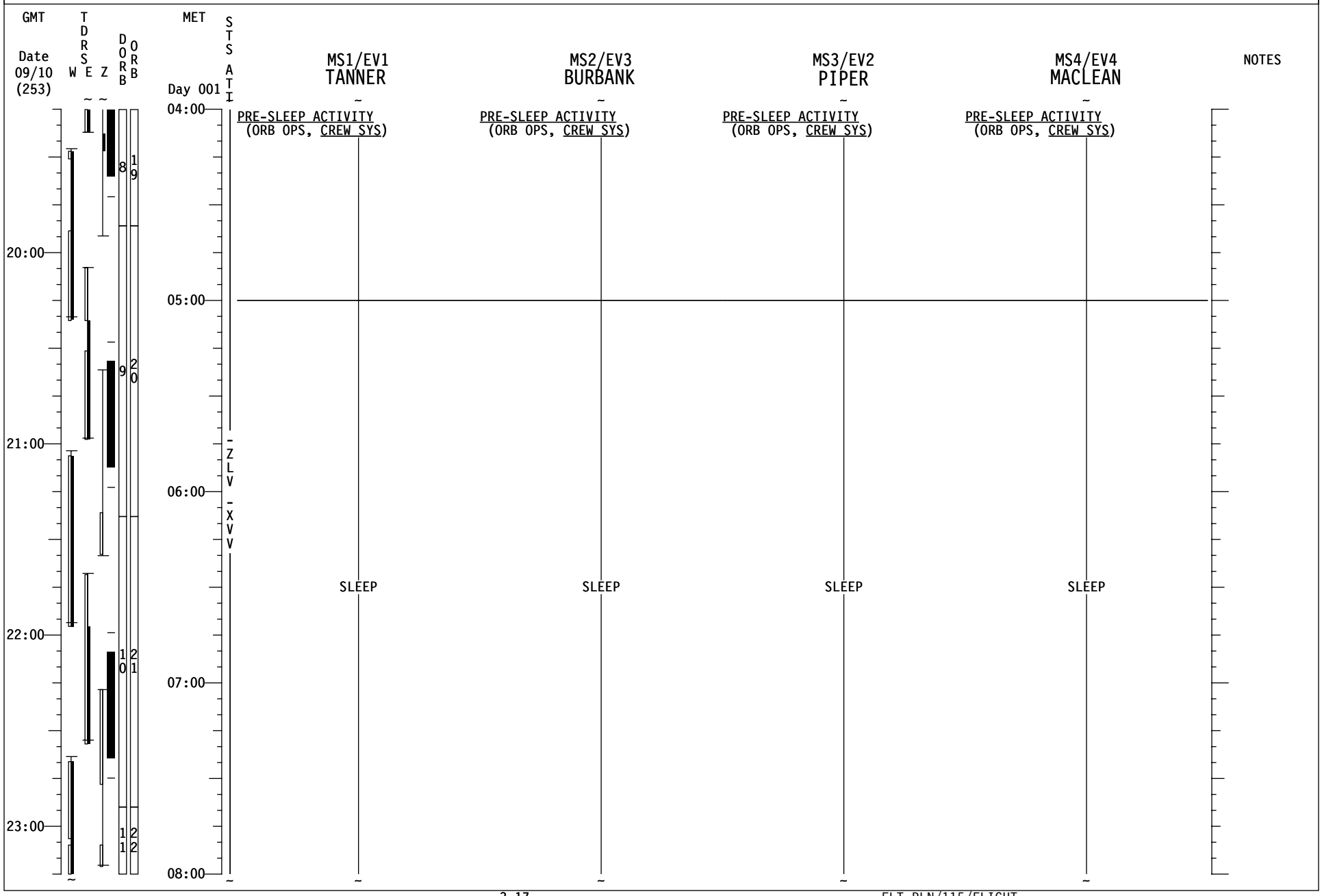

Good morning Atlantis! Congratulations on a marvelous launch and a smooth start of your mission! We know you are as happy as we are that the assembly of ISS is on its way again. Great job yesterday, be assured that we continue do our best to assist you where we can!

YOUR CURRENT ORBIT IS: 171 X 152 NM

NOTAMS:

AMBERLY (AMB) - CLOSED
ANDERSEN (GUA) - 06L/24R CLOSED, ALTERNATE 06R/24L
ANDERSON BACKUP VOR/DME UNZ100 CHANNEL CHANGED TO UNZ105
HALIFAX (YHZ) - CLOSED, ALTERNATE GREENWOOD (YZX)
HAO ATOLL (HAO) CH 85 OUT OF SERVICE
ISTRRES (FMI) - RUNWAY 33 DISTANCE MARKERS @ 300, 600, 900M
LAJES (LAJ) CH 45 OUT OF SERVICE
OCEANA (NTU) - RWY PREFERRED 32L FOR ISOLATION FROM AIR SHOW
ORMAND BEACH (OMN) CH 73 AZIMUTH OUT OF SERVICE
RIO GALLEGOS (AWG) - NOT APPROVED
SALISBURY (SBY) CH 49 AZIMUTH OUT OF SERVICE (PRIME TACAN FOR WALLOPS)
WAKE ISLAND (WAK) - CLOSED
WAKE ISLAND (AWK) CH 82 OUT OF SERVICE
WILMINGTON (ILM) - CLOSED

NEXT 2 PLS OPPORTUNITIES:

EDW22 ORB 17 – 1/00:56 (SKC, 190@05P08)
EDW22 ORB 33 – 2/01:15 (SKC, 200@04P06)

OMS TANK FAIL CAPABILITY:

PRE-NC3	POST NC-3
L OMS FAILS: YES (SHALLOW TARGETS)	L OMS FAILS: YES (SHALLOW TARGETS)
R OMS FAILS: YES (SHALLOW TARGETS)	R OMS FAILS: NO

LEAKING OMS PRPLT BURN:
AN = Ascending Node

PRE-NC3		POST-NC-3	
L OMS LEAK:	BURN OOP AN+ 69 <= TIG <= AN+31 OTHERWISE BURN RETRO	L OMS LEAK:	BURN OOP AN+68 <= TIG <= AN+34 OTHERWISE BURN RETRO
R OMS LEAK:	BURN OOP AN+69 <= TIG <= AN+32 OTHERWISE BURN RETRO	R OMS LEAK:	ALWAYS BURN RETRO

PRE-NC-3 OMS QUANTITIES(%)		POST NC-3 OMS QUANTITIES(%)	
L OMS OX = 35.4	R OMS OX = 35.4	L OMS OX = 35.4	R OMS OX = 35.4
FU = 36.3	FU = 36.1	FU = 36.3	FU = 36.1

SUBTRACT I'CNCT COUNTER FOR CURRENT OMS QUANTITIES

DELTA V AVAILABLE:

PRE-NC-3		POST-NC-3	
OMS	325 FPS	OMS	316 FPS
ARCS (TOTAL ABOVE QTY1)	50 FPS	ARCS (TOTAL ABOVE QTY1)	47 FPS
TOTAL IN THE AFT	375 FPS	TOTAL IN THE AFT	363 FPS
ARCS (TOTAL ABOVE QTY2)	78 FPS	ARCS (TOTAL ABOVE QTY2)	75 FPS
FRCS (ABOVE QTY 1)	65 FPS	FRCS (ABOVE QTY 1)	63 FPS
AFT QTY 1	97 %	AFT QTY 1	96 %
AFT QTY 2	59 %	AFT QTY 2	58 %

SYSTEM	FAILURE	IMPACT	WORK AROUND
APU	APU 3 EGT 2 was erratic during APU operation.	None.	None. APU 3 EGT 1 is available on BFS SM SYS SUMM 2.
EPS	Loss of Fuel Cell 1 coolant pump ΦA.	Loss of redundancy on Fuel Cell 1. Fuel Cell 1 pH sensor is unpowered with the cb open.	L4:C cb AC1 FC1 PUMPS ΦA was opened to protect against further damage and will remain open. If AC1 ΦB or ΦC is lost, Fuel Cell 1 shutdown will be required.
GNC	Speedbrake Ch 3 transient degradation of driver output. The momentary degradation of driver outputs generated a force fight several times during ascent and after powered flight.	Speedbrake Ch3 is considered failed for mission duration. The root cause of the problem is not known, and the rest of the actuators on ASA 3 have not been exonerated.	A bypass of Speedbrake channel 3 will keep the problem from generating a force fight and may be required for Entry.
PLBD 1	Stbd Dr Aft Close microsw failed on.	Stbd Dr will close single motor.	None. Mech SSR-6 available to regain motor 2 drive if needed.
PLBD 2	Port Dr Fwd Close microsw went off prematurely.	PBD CONFIG msg during opening.	None. MANUAL mode necessary for door closure if microsw not regained using AUTO mode.

The stowage matrices below are intended to help the shuttle and ISS crews stay in sync regarding usage of ISS P/TV equipment during the docked mission, as well as help the shuttle crew find station P/TV hardware required to set up scenes from the shuttle P/TV Checklist. FD01 & 02 activities do not directly affect shuttle crew members, but are included for a complete picture of activities affecting P/TV hardware in this timeframe. Activities highlighted in the list below in Pink are from the shuttle P/TV Checklist. Non-highlighted activities are ISS procedures.

NOTE: Restow all items back into the location that they came out of, unless otherwise stated in the matrices below.

12A Flight Day 1 Activities:
P/TV-DCS BATT-CHRG
P/TV-DCS BATT-SWAP
P/TV-BATT-STOW

12A Flight Day 2 Activities:
P/TV-RPM CAMERA-CNFG
P/TV-RPM CMCRDR-CNFG

12A Flight Day 3 Activities:
P/TV-H/W-S/U-VRFY
P/TV05 ISS INTERNAL SETUP (STS Photo/TV, SCENES)
F5 EVA CAMR S/U (STS Photo/TV, Nikon F5)
760 EVA-CAMR ONLY S/U (STS Photo/TV, DCS 760 EVA CAMR)

12A Flight Day 6 Activities:
EVA IR CAMERA SETUP (STS Photo/TV, EVA IR CAM)

12A Flight Day 7 Activities:
760 EVA - CAMR ONLY DISASSEMBLY (STS Photo/TV, DCS 760 EVA CAMR)
EVA F5 DEACTIVATION

12A Flight Day 1 Activities:

P/TV-DCS BATT-CHRG P/TV-DCS BATT-SWAP						
P/TV 122 ORBITER APPROACH/R-BAR PITCH MANEUVER						
Type: Standard			IMS Plan: No			
#	**LOCATION**	**ITEM NAME**	**P/N**	**S/N**	**B/C**	**Notes**
1	**ISS DEPLOYED**	DCS Rechargeable Battery [QTY 10]	SDZ33112993-802	-	-	QTY 8 to be used for RPM QTY 2 for STS-115 EVA 1.
2	**LAB1D3**	DCS 760 Batt Chgr/Pwr Supply	SEZ33112994-301	1006	00015461J	Installed in the LAB at UOP4.
3		28VDC Power Adapter Cable 6'	SEZ33112998-301	1005	00008329J	
4		DCS 760 Batt Chgr/Pwr Supply	SEZ33112994-301	1008	00015426J	
5		28VDC Power Adapter Cable 6'	SEZ33112998-301	1002	00008331J	

P/TV-BATT-STOW						
N/A						
Type: Restow			IMS Plan: No			
1	**LAB1D3**	DCS Rechargeable Battery [QTY 2]	SDZ33112993-802	-	-	Temp stow at battery charger for STS-115 EVA 1.
2	**SM**	DCS Rechargeable Battery [QTY 8]	SDZ33112993-802	-	-	Temp stow in SM for RPM use.

12A Flight Day 2 Activities:

P/TV-RPM CAMERA-CNFG						
P/TV 122 ORBITER APPROACH/R-BAR PITCH MANEUVER						
Type: Standard			IMS Plan: No			
#	LOCATION	ITEM NAME	P/N	S/N	B/C	Notes
1	**ISS DEPLOYED** Continued on next page	DCS 760 Camera [QTY 3]	SEZ33113001-302	1039 1015 1012	00045526J 00045510J 00045509J	-S/N 1039 to be used as PRIME camera for 800MM lens. -S/N 1015 to be used as PRIME camera for 400MM lens. -S/N 1012 to be used as back-up camera. This camera will be used for the 12A EVAs.
2		400mm Lens [QTY 2]	SED33105842-301	5007 5008	00018608J 003435J	
3		2x Teleconverter Lens [QTY 2]	SED33104530-303	5003 5004	- 00018609J	
4		DCS Rechargeable Battery [QTY 8]	SDZ33112993-802	-	-	Gathered and temp stowed in SM on FD01. -QTY 3 used to keep accurate time/date in cameras. -QTY 2 to be used in Prime DCS 760 Cameras (installed during Step 7). -QTY 1 to be used in Back-up DCS 760 Camera (installed during Step 7). -QTY 2 used as back-up.

5	**ISS DEPLOYED**	1GB EVA Flash Card [QTY 5]	SEZ33118356-301	-	-	These were formatted for use in DCS 760s during RPM. -QTY 2 cards will be in each of the prime cameras. -QTY 1 card will be in the backup camera.
6	**ISS DEPLOYED** OR **LAB1D3** 1.0 CTB: STILL/DIGITAL CABLES AND ACCESSORIES, S/N 1057, B/C 002900J	PCMCIA 1GB Microdrive [QTY 3]	SEZ33112992-301	-	-	These were formatted on GMT 240. -QTY 1 card will be in the backup camera. -Use remaining QTY 2 cards as loose backups.
7		PCMCIA 1GB Microdrive	SEZ33112992-301	-	-	This will be used to load the firmware on the Camera, and is not one of the ones to be formatted for RPM use.
8	**ISS DEPLOYED** OR **LAB1D3** 1.0 CTB: VIDEO CABLES AND ACCESSORIES, S/N 1069, B/C 003857J	Lens Cloth Kit	SED33102528-330	-	-	
9	**NOD1O4_D2** 0.5 CTB: FCE SPARES, S/N 1220, B/C 010401J	Timer/Stopwatch [QTY 2]	528-20760-2	-	-	
10	**CREW PREFERENCE**	Wet or Dry Towels	-	-	-	

P/TV-RPM CMCRDR-CNFG						
6.201 PD100 NOMINAL SETUP						
Type: Standard			IMS Plan: No			
#	**LOCATION**	**ITEM NAME**	**P/N**	**S/N**	**B/C**	**Notes**
1	**ISS DEPLOYED**	PD100 Camcorder	SEZ16103293-301	-	-	**REPORT** S/N Used.
2	**LAB1D3** 1.0 CTB: ISS PHOTO TV RESUPPLY BAG, S/N 1076, B/C 004070J	Mini DVCAM Tape	SED33111489-305	-	-	Install tape into Camcorder.
Type: Restow			IMS Plan: No			
3	**LAB1D3** 1.0 CTB: ISS PHOTO TV RESUPPLY BAG, S/N 1076, B/C 004070J	Mini DVCAM Tape	SED33111489-305	-	-	**RESTOW** in ‘Return to Houston Imagery” ziplock

12A Flight Day 3 Activities:

NOTE: ALL ITEMS LISTED BELOW HAVE BEEN DEPLOYED ON FD 1 AND FD 2. FOR VERIFICATION OF HARDWARE USE ONLY!

P/TV-H/W-S/U-VRFY						
N/A						
Type: Standard			IMS Plan: No			
#	**LOCATION**	**ITEM NAME**	**P/N**	**S/N**	**B/C**	**Notes**
1	**ISS DEPLOYED** Continued on next page	DCS 760 Camera [QTY 3]	SEZ33113001-302	1039 1015 1012	00045526J 00045510J 00045509J	-S/N 1039 to be used as PRIME camera for 800MM lens. -S/N 1015 to be used as PRIME camera for 400MM lens. -S/N 1012 to be used as back-up camera.
2		400mm Lens [QTY 2]	SED33105842-301	5007 5008	00018608J 003435J	Installed on Prime Cameras.
3		2x Teleconverter Lens [QTY 2]	SED33104530-303	5003 5004	- 00018609J	-QTY 1 installed on the 800 mm camera. -QTY 1 for use as back-up.
4		DCS Rechargeable Battery [QTY 8]	SDZ33112993-802	-	-	Gathered and temp stowed in SM on FD01. -QTY 3 used to keep accurate time/date in cameras. -QTY 2 to be used in Prime DCS 760 Cameras (installed during Step 7). -QTY 1 to be used in Back-up DCS 760 Camera (installed during Step 7). -QTY 2 used as back-up.

5	**ISS DEPLOYED**	1GB EVA Flash Card [QTY 5]	SEZ33118356-301	-	-	These are to be installed in the DCS 760 Cameras during the RPM. -QTY 2 cards will be in each of the prime cameras. -QTY 1 card will be in the backup camera.
6		PCMCIA 1GB Mircodrive [QTY 3]	SEZ33112992-301	-	-	-QTY 1 card will be in the backup camera. -Use remaining QTY 2 cards as loose backups.
7		Lens Cloth Kit	SED33102528-330	-	-	
8		Timer/Stopwatch [QTY 2]	528-20760-2	-	-	
9	**CREW PREFERENCE**	Wet or Dry Towels	-	-	-	

1

P/TV05 ISS INTERNAL SETUP (STS Photo/TV, SCENES)						
N/A						
Type: Standard			IMS Plan: No			
#	**LOCATION**	**ITEM NAME**	**P/N**	**S/N**	**B/C**	**Notes**
1	**LAB1 FWD ENDCONE** DOCKING MECHANISM ACCESSORY KIT	Audio #1 Cables	-	-	-	
2		42ft BPSMU Cable	SED16102418-317	5012	00063172J	
3		35ft BPSMU Cable	SED16102418-323	5050	00063176J	
4		44ft BPSMU Cable	SED16102418-325	5046	00063178J	
5		22ft BPSMU Cable	SED16102418-321	1009	00063175J	
6		4ft BPSMU Cable	SED16102418-315	1016	00063170J	
7		BPSMU/CCU Adapter	SED16102418-309	5028	-	
8		RWS 1	-	-	-	**REPORT** S/N or B/C of cables to MCC-H
9		VIU/CM Camcorder Video Cable 15'	SED39122269-301	-	-	
10		BNC Video Cable	SED39122260-320	-	-	
11		RWS 2	-	-	-	
12		VIU/CM Camcorder Video Cable 15'	SED39122269-301	-	-	
13		BNC Video Cable	SED39122260-320	-	-	
14		BPSMU	SED16102419-301	-	-	**REPORT** S/N or B/C to MCC-H
15		Drag Through QD	-	-	-	
16		Drag Through QD Station Half	SEG33117340-301	1002	00050541J	
17		Drag Through QD Orbiter Half	SEG33117339-301	1002	-	

F5 EVA CAMR S/U (STS Photo/TV, Nikon F5)						
NA						
Type: Standard			IMS Plan: No			
#	**LOCATION**	**ITEM NAME**	**P/N**	**S/N**	**B/C**	**Notes**
1	**A/L1O** 1.0 CTB: EVA CAMERA ACCESSORIES S/N 1221, B/C 006717J	Thermal Blanket, Camera Mtg Assy	SED33117417-301	1001	-	
2		Camera Mounting Assy	SED33113695-302	1038	-	
3		28mm EVA Lens	SED33105019-301	1004	-	Ensure Circular Polar 52mm w/o Glass (i.e. bumper) is installed on lens. Additional bumpers can be found in the P/TV Resupply Kit.
4	**A/L1O** 0.5 CTB: ISS PHOTO/TV EVA HARDWARE, S/N 1043, B/C 003925J	F5 Camera	SED33110611-307	1014	00008068J	
5		F5 EVA Thermal Blanket	SED33105013-301	1002	-	
6		EVA Action Finder	SED33110611-327	-	008051J	
7	**FGB Behind Panel 424** 0.5 CTB: Battery Locker, S/N 1190, B/C 006639J	1.5V Battery Size AA [QTY 8]	528-41350-3	-	-	

NOTE: The 35mm Film used for this camera is shuttle film, and must be transferred to station for use.

760 EVA-CAMR ONLY S/U (STS Photo/TV, DCS 760 EVA CAMR)						
NA						
Type: Standard			IMS Plan: No			
#	**LOCATION**	**ITEM NAME**	**P/N**	**S/N**	**B/C**	**Notes**
1	**ISS DEPLOYED**	DCS 760 Camera	SEZ33113001-302	1012	00045509J	Use the camera that was the back-up camera for the RPM activities.
2		1GB EVA Flash Card [QTY 2]	SEZ33118356-301	-	-	**REPORT** S/N to MCC-H.
3	**A/L1O** 1.0 CTB: EVA CAMERA	Thermal Blanket, Camera Mtg Assy	SED33117417-301	1003	-	
4		Camera Mounting Assy	SED33113695-302	1040	-	
5		EVA Action Finder	SED33110611-327	-	00008051J	

6	ACCESSORIES S/N 1221, B/C 006717J	EVA Camera Blanket	SEZ33113449-301	-	-	**REPORT** S/N to MCC-H.
7		28mm, 35mm, 50mm Lens Cap	SEZ33113449-303	Crew Pref	-	**REPORT** S/N to MCC-H.
8	**A/L1O** 1.0 CTB: EVA CAMERA ACCESSORIES S/N 1221, B/C 006717J	28mm EVA Lens	SED33105019-301	1002	-	Ensure Circular Polar 52mm w/o Glass (i.e. bumper) is installed on lens. Additional bumpers can be found in the P/TV Resupply Bag.
9	**ISS DEPLOYED** OR **LAB1D3** 1.0 CTB: VIDEO CABLES AND ACCESSORIES S/N 1069, B/C 003857J	Lens Cloth Kit	SED33102528-330	-	-	
10	**LAB1D3**	DCS Rechargeable Battery [QTY 2]	SDZ33112993-802	-	-	Temp stowed at battery charger.
11		PCMCIA 1GB Microdrive	SEZ33112992-301	Crew Pref	-	**Report** S/N to MCC-H. Card will be used to load the camera firmware.

12A Flight Day 6 Activities:

EVA IR CAMERA SETUP (STS Photo/TV, EVA IR CAM)						
NA						
Type: Standard			IMS Plan: No			
#	LOCATION	ITEM NAME	P/N	S/N	B/C	Notes
1	A/L1 Crewlock	EVA IR Camera	1257950-701	1002	-	This camera should have required flash card installed.
2	TBD	EHIP Battery Pack	SEG39130223-303	-	-	Location and S/N will be give to you prior to the activity.

12A Flight Day 7 Activities:

760 EVA - CAMR ONLY DISASSEMBLY (STS Photo/TV, DCS 760 EVA CAMR)						
NA						
Type: RESTOW			IMS Plan: No			
#	LOCATION	ITEM NAME	P/N	S/N	B/C	Notes
1	Deployed	DCS 760 Camera	SEZ33113001-302	1012	-	Re-install standard viewfinder, and deploy for nominal use.
2	LAB1D3	DCS Rechargeable Battery	SDZ33112993-802	-	-	Deploy for use at battery charger.
3	A/L1O 1.0 CTB: EVA CAMERA ACCESSORIES S/N 1221, B/C 006717J	1GB EVA Flash Card [QTY 2]	SEZ33118356-301	-	-	Remove from camera. After imagery downlink is complete stow card separately in CTB B/C 006717J.
4		EVA Action Finder	SED33110611-327	-	00008051J	
5		EVA Camera Blanket	SEZ33113449-301	-	-	
6		28mm, 35mm, 50mm Lens Cap	SEZ33113449-303	Crew Pref	-	Leave installed on EVA Camera Blanket
7		Thermal Blanket, Camera Mtg Assy	SED33117417-301	1003	-	Remove mount from camera but keep the

8		Camera Mounting Assy	SED33113695-302	1040	-	Thermal Blanket installed on the Camera Mounting Assy. Stow in CTB B/C 006717J.
9		28mm EVA Lens	SED33105019-301	1002	-	

EVA F5 DEACTIVATION						
NA						
Type: Restow			IMS Plan: No			
#	**LOCATION**	**ITEM NAME**	**P/N**	**S/N**	**B/C**	**Notes**
1	**A/L1O** 1.0 CTB: EVA CAMERA ACCESSORIES S/N 1221, B/C 006717J	Thermal Blanket, Camera Mtg Assy	SED33117417-301	1001	-	Remove mount from camera but keep the Thermal Blanket installed on the Camera Mounting Assy.
2		Camera Mounting Assy	SED33113695-302	1038	-	
3		28mm EVA Lens	SED33105019-301	1004	-	
4	**A/L1O** 0.5 CTB: ISS PHOTO/ TV EVA HARDWARE, S/N 1043, B/C 003925J	F5 Camera	SED33110611-307	1014	00008068J	
5		F5 EVA Thermal Blanket	SED33105013-301	1002	-	
6		EVA Action Finder	SED33110611-327	-	008051J	
7	**Crew Preference**	1.5V Battery Size AA [QTY 8]	528-41350-3	-	-	Use batteries as you would like.

NOTE: Film must be transferred back to Shuttle for return.

13-1176 (MSG 006) 5.501 ATTITUDE CONTROL CONSTRAINTS FOR P3P4 INSTALL

(RBT FS/12A/FIN 3) Page 1 of 2 pages

P3/4 CONFIG \ ATTITUDE CONTROL & OPS [1]		STS ATTITUDE CONTROL		ISS ATTITUDE CONTROL [16] [19]			OPERATIONS [19]						
		VRCS	PRCS	CMG - TA		THRUSTERS ONLY	CREW EXERCISE (ISOLATED OR UNISOLATED) [17]	EVA OPS ON P3P4 [18]	REBOOST (STS, SM, PROG)	UNDOCKING (STS/RS)	DOCKING (STS/RS)	PORT SARJ/ P4 BGA ROTATION	MT TRANS/ SRMS OPS/ SSRMS OPS
				MOM MGMT NO DESATS	USTO								
P3/4 BERTHED IN PAYLOAD BAY		A12/1	B12/2	OK	OK	OK	OK	OK	OK [9]	OK	OK		OK
SRMS OPS	MNVR FROM BERTH TO LOW HOVER (CLEARANCE < 2 FT/5 FT) [2]	NOT OK	NOT OK	OK	NOT OK	NOT OK	OK						OK [12]
	MNVR FROM BERTH TO LOW HOVER (CLEARANCE > 2 FT/5 FT) [2]	NOT OK	NOT OK	OK	OK	OK	OK		NOT OK				OK [12]
	AT P3/4 LOW HOVER	A12/1		OK	OK	OK	OK						OK [12]
	MNVR TO AUTO SEQ START	NOT OK	NOT OK	OK	OK	OK	OK		NOT OK				OK [12]
	AT P3/4 AUTO SEQ START	A12/1		OK	OK	OK	OK						OK [12]
	MNVR TO HANDOFF POSITION	NOT OK	NOT OK	OK	OK	OK	OK		NOT OK				OK [12]
	AT HANDOFF POSITION WITH SSRMS UNGRAPPLED	A15/5		OK	OK	OK	OK						OK [12]
SIMO	AT HANDOFF WITH BOTH SRMS & SSRMS GRAPPLED			OK									
SSRMS OPS	AT HANDOFF WITH SRMS UNGRAPPLED	NOT OK		OK	OK	OK	OK		NOT OK [15]	OK	NOT OK		OK [12]
	MNVR TO INTERMEDIATE POSITION	NOT OK	NOT OK	OK	OK	NOT OK	OK		NOT OK				OK [12]
	AT INTERMEDIATE POSN	A15/6		OK	OK	OK	OK		NOT OK [15]	OK	NOT OK		OK [12]
	MNVR TO PRE-INSTALL POSITION	NOT OK	NOT OK	OK	OK	NOT OK	OK		NOT OK				OK [12]
	AT P3/4 PRE-INSTALL	A15/6		OK	OK	OK	OK		NOT OK [15]	OK	NOT OK		OK [12]
	MNVR TO RTL POSITION	NOT OK	NOT OK	OK	NOT OK	NOT OK	OK		NOT OK				OK [12]
SSAS OPS	AT READY TO LATCH POSITION	NOT OK	NOT OK	OK	NOT OK	NOT OK	NOT OK	NOT OK [14]	NOT OK	NOT OK	NOT OK		OK [6] [13]
	SECOND PHASE/THIRD STAGE CAPTURE COMPLETE (CLAW FULLY CLOSED)	A12/3	NOT OK	OK	OK [10]	NOT OK	OK [8]	OK [7]	NOT OK	NOT OK	NOT OK		OK [6] [13]
	SSAS CLAW FULLY CLOSED & ANY SINGLE SSAS BOLT [3]	A12/3	NOT OK	OK	OK [10]	NOT OK	OK [8]	OK [7]	NOT OK	NOT OK	NOT OK		OK [6] [13]
	COMBINATION OF TWO BOLTS FULLY TIGHT (1-2, 1-4 OR 2-4) & CLAW FULLY CLOSED [3]	A12/3	NOT OK	OK	OK [10]	NOT OK	OK [8]	OK [7]	NOT OK	NOT OK	NOT OK		OK [6] [13]
	COMBINATION OF TWO BOLTS FULLY TIGHT (3-1, 3-2 OR 3-4) & CLAW FULLY CLOSED [3]	A12/3	NOT OK	OK	OK [10]	OK [10]	OK [8]	OK [7]	NOT OK [11]	OK	NOT OK		OK [6]
	ANY 3 FULLY TIGHT BOLTS [3] [4]	A12/3	B12/4	OK	OK	OK	OK	OK	OK	OK	OK	OK	OK [6]
	4 BOLTS FULLY TIGHT [3] [5]	A12/3	B12/4	OK	OK	OK	OK	OK	OK	OK	OK	OK	OK

NOTES:

[1] KEY: ☐ – ACS OR OPS ALLOWED ■ – ACS OR OPS NOT ALLOWED ▨ – NOT ANALYZED

[2] MINIMUM DISTANCE CONSTRAINT IS 2 FT FOR VRCS AND SM THRUSTERS, 5 FT FOR PRCS.

[3] REFERENCE RULE {12A_C10-2}, SSAS BOLT FULLY TIGHT DEFINITION. THE LOAD CONSTRAINTS CAN BE SUPPORTED BY MBA BOLTS OR EVA INSTALLED SSAS CONTINGENCY BOLT KITS. EACH SSAS INTERFACE IS CERTIFIED TO SUPPORT LOADS AS DOCUMENTED WITH UP TO TWO CONTINGENCY BOLT KITS INSTALLED.

[4] THIS CONFIGURATION CAN TOLERATE ALL EXPECTED LOADS UNTIL THE MATING OF ADDITIONAL TRUSS SEGMENTS.

[5] THE NOMINAL PLAN IS TO OPEN THE CAPTURE LATCH AFTER AT LEAST FOUR BOLTS ARE FULLY TIGHT. A FAILED CLOSED CAPTURE LATCH CAN SUPPORT NEAR TERM LOADS BUT THE LONG TERM LOAD CARRYING CAPABILITY OF THE INTERFACE MAY BE AFFECTED.

[6] MT/CETA CANNOT TRANSLATE ACROSS SSAS INTERFACE UNTIL ALL FOUR BOLTS ARE CONSIDERED FULLY TIGHT PER RULE {12A_C10-2} SSAS BOLT FULLY TIGHT DEFINITION

[7] CAN ONLY SUPPORT EVA LOADS ON P3/P4 TRUSS WHEN CREWMEMBER IS INBOARD OF SARJ. NO APFR BASED OPERATIONS ON P3.

[8] ORBITER ERGOMETER NOT ALLOWED. ALL ISS EXERCISE OK.

[9] CONFIG 3 (VRCS) ONLY REBOOST ALLOWED

[10] SM JETS ALLOWED, PROGRESS JETS NOT ALLOWED

[11] SM MAIN ENGINE AND ORBITER REBOOST NOT ALLOWED. PROGRESS R&D IS ALLOWED.

[12] SRMS/SSRMS OPERATIONS ACCEPTABLE. MT TRANSLATION NOT ACCEPTABLE.

[13] SRMS OPERATIONS ACCEPTABLE. NOT APPLICABLE FOR SSRMS/MT OPERATIONS.

[14] EVA OPERATIONS FOR MANUAL SSAS CAPTURE LATCH CLOSURE AND PRD INSTALLATION ACCEPTABLE.

[15] STS REBOOST NOT ALLOWED. ISS REBOOST, EXCEPT FOR SM MAIN ENGINE, IS ALLOWED.

[16] REFERENCE RULE {C2-65} MATED FES DUMP CONSTRAINTS FOR TIMEFRAMES ON FD3 AND FD4 TO AVOID TERMINATING OR INITIATING FES DUMPS. THESE CONSTRAINTS ARE TO AVOID SIGNIFICANT INCREASES IN MOMENTUM WHEN MOMENTUM MANAGEMENT IS THE ONLY ALLOWABLE CONTROL MODE.

[17] IF THERE IS AN EVA WHILE THE ORBITER IS CONTROLLING ATTITUDE WITH PRCS JETS, ONLY TVIS EXERCISE IS ALLOWED DURING THE EVA.

[18] MAXIMUM EVA LOADS ARE NOT PERMITTED DURING ORBITER PRCS MANEUVER OF THE ISS OR DURING PRCS TWO OR THREE-JET ATTITUDE HOLD. MAXIMUM EVA LOADS INCLUDE APFR INGRESS, VIGOROUS APFR MOTIONS, AND CREW KICK-OFFS.

[19] REFERENCE CSA-SS-MOA-F12A_003 REV D, CSA-SS-MOA-F12A-004 REV B

Please perform the following jet reprioritizations:

GNC 23 RCS

ITEM 1 EXEC (Fwd Page)
ITEM 8 EXEC - twice (Places F1L in last priority)
ITEM 12 EXEC - twice (Places F2R in last priority)
ITEM 20 EXEC - twice (Places F2U in last priority)
ITEM 32 EXEC - twice (Places F3F in last priority)
ITEM 34 EXEC - twice (Places F2F in last priority)
ITEM 4 + 3 EXEC (Update Pri Jet Fail Limit to 3)

ITEM 2 EXEC (Left Page)
ITEM 18 EXEC - twice (Places L2U in last priority)
ITEM 16 EXEC - twice (Places L4U in last priority)
ITEM 26 EXEC - twice (Places L2D in last priority)
ITEM 32 EXEC - twice (Places L1A in last priority)

ITEM 3 EXEC (Right Page)
ITEM 18 EXEC - twice (Places R2U in last priority)
ITEM 16 EXEC - twice (Places R4U in last priority)
ITEM 26 EXEC - twice (Places R2D in last priority)
ITEM 30 EXEC - twice (Places R1A in last priority)

OBSS ITVC/LDRI FLAT FIELDS

NOTE

Assumed starting posn is OBSS Hover. Flat Field imagery is used to characterize sensor response. Daylight is NOT required

1. SETUP

SM 94 PDRS CONTROL

PL ID – ITEM 3 +2 EXEC
INIT ID – ITEM 24 +2 EXEC

A7U VIDEO OUT MUX 1 L pb – push (MIDDECK lt on)
√LDRI MODE 6 pb – push (flickering LDRI video)

VIDEO OUT DTV pb – push (PL2 lt on)
OUT MON2 pb – push
IN PL2(VPU) pb – push

√PAN: +103
TILT: -270

2. MNVR TO FLAT FIELD POSN

NOTE

Tilt (lo rate) LDRI positive and negative between -270 and -250 during arm mnvr. Goal is to vary tilt to image white upper surface during mnvr.

RHC RATE – VERN (RATE MIN tb-ON)
BRAKES – OFF (tb-OFF)
MODE – ORB LD, ENTER

On MCC GO,
L10(VTR) REC pb – push, hold
PLAY pb – push, simo (red ●)

Mnvr to FLAT FIELD posn:

X	Y	Z	PITCH	YAW	ROLL	PL ID
-1001	+303	-501	0	0	24	2
SY	SP	EP	WP	WY	WR	
-89.6	+44.5	-84.6	-45.4	0.0	+109.6	

BRAKES – ON (tb-ON)

L10(VTR) STOP pb – push (no red ●)

SM 94 PDRS CONTROL

PL ID – ITEM 3 +3 EXEC
INIT ID – ITEM 24 +3 EXEC

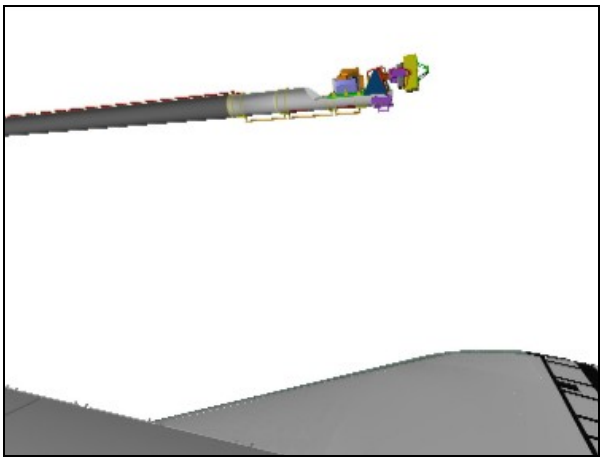

CCTV C (70,-5)

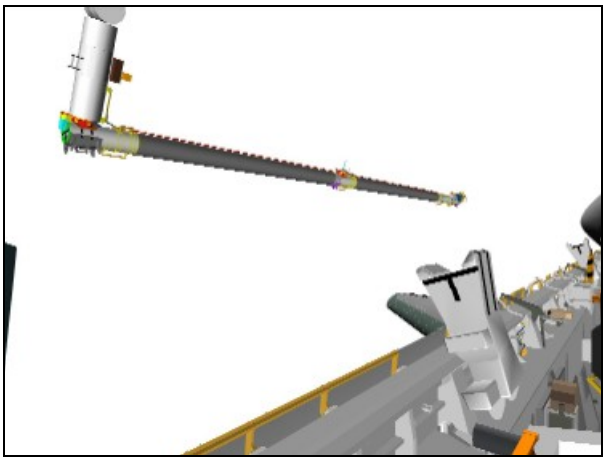

CCTV D (-40,0)

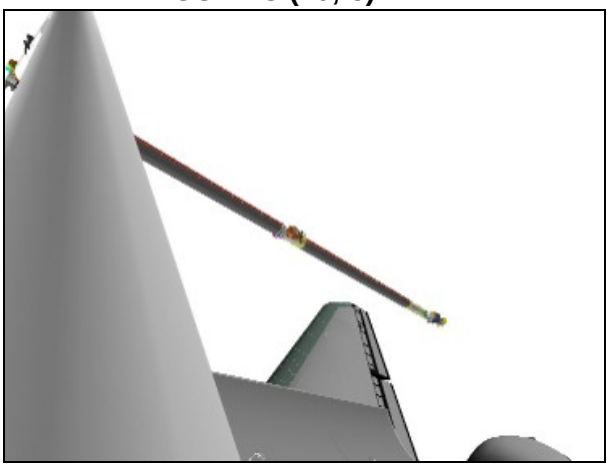

ELBOW (25,-35)

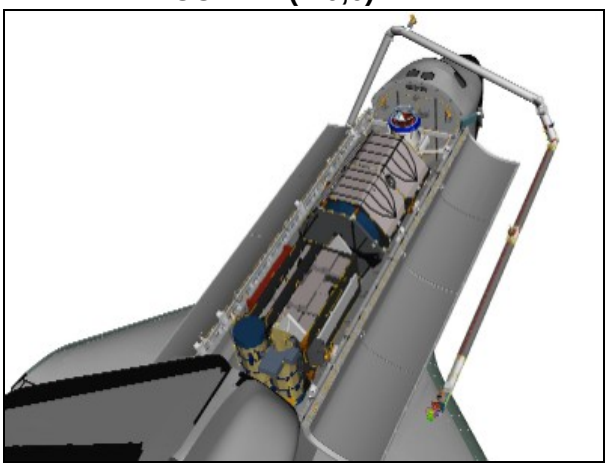

BIRD'S EYE

3. <u>MNVR TO STBD SURVEY ATTITUDE</u>
   MNVR to STBD SURVEY attitude per FLIGHT PLAN
   Go to OBSS LDRI RCC SURVEY – STBD UNDOCKED

(MSG 009)

4. STBD LDRI ACAS, PREPARE FOR SECTION 2

NOTE

Between Pts 5 and 7, arm adjusts for survey of Zones 1 & 2.
Section 2 then scans Zones 1 & 2, Panels 22 → 1.
At Pt 6, Upper Arm-to-APAS = 20.6 in.
At Pt 7, Upper Arm-to-P3/P4 = 12.7 in.
Time between Pts 5 and 7 ~ 2:50 min

AUTO SEQ – PROCEED (IN PROG lt on)

Pt	X	Y	Z	PITCH	YAW	ROLL	●	
5P	**-1255**	**+502**	**-281**	**326**	**352**	**67**		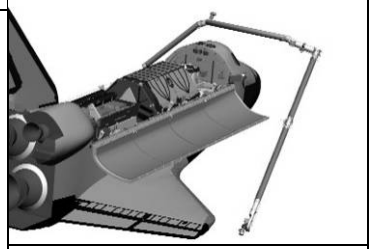
6	-1255	+502	-220	346	352	67		
7P	**-1358**	**+477**	**-220**	**346**	**347**	**16**		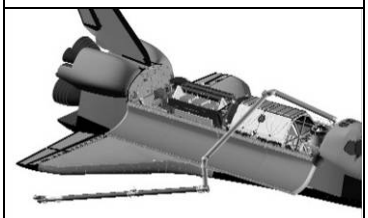

5. LCS/IDC CHARACTERIZATION

NOTE

LCS and IDC characterization images are obtained here to assess LCS and IDC sensor performance while looking at RCC

a. LCS Characterization

Allow arm motion to damp-out for 30 sec, then:

LCC/A31p sel'Scanning' 'Detailed Area Scan'
sel – Area Scan 14
cmd Start Area Scan (verify Scan Line - Done)

sel – Area Scan 16
cmd Start Area Scan (verify Scan Line - Done)

sel – Area Scan 17 LDA
cmd Start Area Scan (verify Scan Line - Done)

b. IDC Characterization

LCC/A31p Minimize, do not close LCC software
Sel 'Shuttle Apps' > 'IDC'

NOTE

Expect 'iport probe failed' message at first pwr on attempt.
If message persists, see troubleshooting section

(MSG 009)	
	Sel ‘Power On’ (pause 3 sec) Sel ‘Power On’
	√‘Use AE’ checked Sel ‘Scan Lo-Res’
A7U	VIDEO OUT MON2 pb – push IN PL2 (VPU) pb – push
	PAN: +82 (left) TILT: -55 (up)
-	PAN/TILT to illuminate IDC FOV
LCC/A31p	Resize and posn AE box on RCC (pause 2 sec) Sel ‘Scan Hi-Res’ Sel ‘Stop Scan’ after 30 sec √‘Waiting for User Command’ displayed
	Sel ‘RCC-Day’ or ‘RCC-Night’ from drop-down menu per real-time conditions Sel ‘Acquire Set’ √‘Acquiring Set’ displayed √‘Waiting for User Command’ displayed after set

(MSG 009)

6. STBD LDRI ACAS, CONTINUE WITH SECTION 2

NOTE
At Pt 12, Upper Arm-to-APAS = 19 in.
Time between Pts 7 and 12 ~ 4:00 min

Section 2 Clearance Views	Cameras
OBSS-to-PLBD	C[2], D[1], ELBOW[4], RSC[3]
OBSS-to-Wing	D[1], ELBOW[4], RSC
[1]Good until X ~ -1275 [2]Good until X ~ -1200	[3]PLBD enters FOV at X ~ -1145 [4]Good until X ~ -1130

A7U VIDEO OUT MON2 pb – push
IN PL2(VPU) pb – push

PAN: +80 (left)
TILT: -65 (up)

PAN/TILT to match LDRI view shown below

Note PAN/TILT: _____, _____

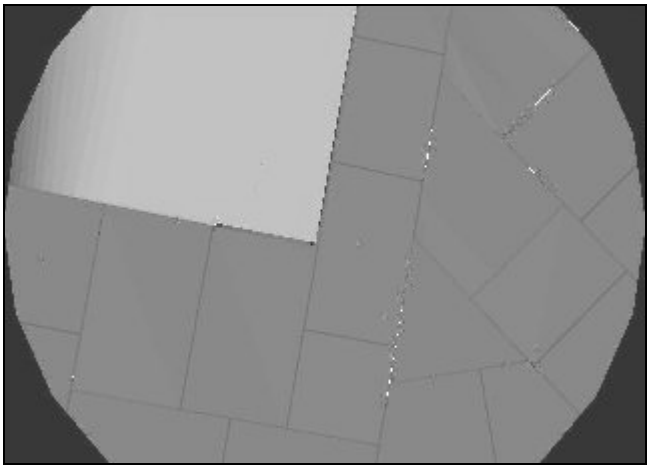

LDRI (80,-65)

VIDEO IN – as desired (not PL2)

LCC/A31p Sel 'Scan Hi-Res'

L10(VTR) REC pb – push, hold
PLAY pb – push, simo (red ●)

(MSG 009)

On MCC GO,
AUTO SEQ – PROCEED (IN PROG lt on)

Pt	X	Y	Z	PITCH	YAW	ROLL	●	
7P	**-1358**	**+477**	**-220**	**346**	**347**	**16**		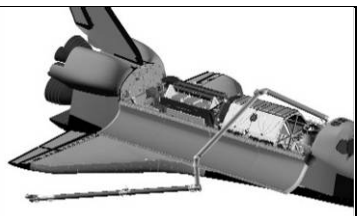
8	-1316	+463	-220	346	347	16		
9	-1294	+464	-222	346	347	19		
10	-1061	+218	-201	334	12	22	¼	
11	-1004	+200	-205	332	20	27		
12P	**-930**	**+220**	**-225**	**323**	**19**	**54**		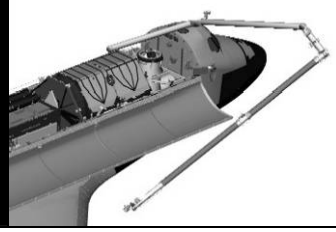

LCC/A31p Sel ‘Stop Scan’
Sel ‘Power Off’

7. <u>STBD LDRI ACAS, SECTION 3</u>

<u>NOTE</u>
VTR not stopped between Sections 2 & 3. Section 3 scans RCC Zones 2 & 3, Panels 1 → 22. Run time ~ 4:55 min

Section 3 Clearance Views	Cameras
OBSS-to-PLBD	C[2], D[3], ELBOW, RSC[1]
OBSS-to-Wing	D, ELBOW, RSC
[1]PLBD leaves FOV at X ~ -1130 [2]Good after X ~ -1110 [3]Good after X ~ -1212	

Today there will be one CWC fill. For today's fill, use any of the following CWCs: 1029, 1053, 1066, 1072, 1073, 1077, or 1078 located in Middeck Floor Port 1.

FD02 Shuttle/ISS H2O Container Fill Details

The Shuttle/ISS H2O Container Fill scheduled for CDR at MET 0/18:05 should contain the following details:

Perform EQUIP PREP and WATER TRANSFER HOSE PURGE (ORB OPS, ECLS) p5-25 then

SHUTTLE/ISS H2O CONT FILL INIT #1
Ag Biocide is req'd.
Sample is req'd.
Fill Duration: ~52 minutes
Report Serial Number and Barcode to MCC.

After the fill is complete, insert green label in CWC window; apply decals to CWC ends; and mark CWC serial number on the end decals. Temp stow the CWC. It will be transferred to the ISS on FD 4.

LOCKER STOWAGE

STS-115 FLT DECK STOWAGE ..... FS 1-2
MIDDECK STOWAGE ..... FS 1-4
LIGHTWEIGHT MAR ..... FS 1-14
CONSUMABLES ..... FS 1-15

STS-115 FLT DECK STOWAGE

C4A

FDF

C4F

FDF

R3A

FDF

R3F

FDF

L10 UPPER

AVIU
Batt Charger, DCS
Cables
- DCS 7V DC Pwr, 15 ft
- DCS 28V DC Pwr, 6 ft

Tapes
- Digital Video (117)
- Sony Video (11)

VPU Plug, Green

L10 LOWER

Cable, BNC-BNC Video
DTV w/Tape

L11

OIU
PDIP 2

L12

PDIP 1
SSP 1/SSP 2

R12

SPAS/OPP/OBSS
VPU

A16

Bag, 35mm Camera
- Bag, Dry Wipe Assy (2)
- Batts
  - Button (CR2025) Assy
  - NiMH (3)
- Cable Assy, Shutter Release w/Extension
- Camera, 35mm w/Film
- Card, PCMCIA Micro Drive, 1 GB (4)
- Film, 35mm (27, 1 installed)
- Flash, 35mm (2)
- Flash Cord
- Flash Memory Storage Device, EVA (15)

A16

(Cont)
Bag, 35mm Camera (Cont)
- Lens
  - 16mm
  - 20-35mm
  - 28mm
  - 50mm
  - 180mm w/Bumper

Bag, Core Camcorder
- Adapters
  - BNC-RCA (2)
  - BNC-T (2)
  - RCA-BNC (2)
  - TWINDX (2)
- AVIU
- Batts
  - AA (62)
  - Li-ION (6)
  - Silver Oxide, 1.5V (2)
- Batt Charger, Li-ION
- Bracket, Multiuse
- Cables
  - AVIU Video
  - Digital CC Video/Pwr, 15 ft
  - IEEE 1394 4-Pin Firewire
  - PD100 A/V Adapter
  - RCA-RCA (2)

STS-115 FLT DECK STOWAGE (Cont)

A16

(Cont)
- Bag, Core Camcorder (Cont)
  - Cables (Cont)
    - Video IN/OUT
    - VIU/CM-CC Video, 15 ft (2)
    - VPU Patch
    - Y-C
  - Headphones
  - Lens, PD100 Wide Conversion
  - Microphone w/Batt
  - Remote, PD1
  - Tapes
    - Digital Video (36)
    - Sony PDV-184ME (5)
- Bungee (2)
- Cable, PILOT RS-232 Pwr/Data Y
- PILOT Hand Controller

A17

- Bag, DTV Camera
  - Bracket, HUD
  - Cables
    - ATU Recorder w/Stereo-to-Mono Audio Adapter
    - Balanced Video
    - BNC Video
    - BPSMU A/V Patch
    - Digital CC Video/Pwr, 15 ft

A17

(Cont)
- Bag, DTV Camera (Cont)
  - Cables (Cont)
    - DTV IEEE 1394 to Female
    - DTV IEEE 1394 to Male
    - DTV IEEE 1394 w/Batt Adapter
    - IEEE 1394, 15 ft (2)
    - IEEE 1394 Crew Cabin (2)
    - Mini-Cam/AVIU Adapter
    - Mini-Cam On-Orbit w/Extension
    - VIU/CM-CC Video, 15 ft
  - Camera, Mini-Cam (Spare)
  - Converter, IVA 1394 (2)
  - Kit, DTV MUX Fuse (5-5A, 3-2A)
    - Adapters
      - MUX Coax Torque
      - MUX Short Coax Torque
    - Wrench, Combination, 7/16 in
  - Lens
    - 6mm Mini-Cam
    - 12mm Mini-Cam
  - Transformer, Bal/Unbal
- Bag, Camcorder #2
  - AVIU (2)
  - Batt, Li-ON (12)
  - Cables
    - Digital CC Vid/Pwr, 15 ft (2)
    - PD100 A/V Adapter
    - VIU/CM-CC Video, 15 ft (2)

A17

(Cont)
- Bag, Camcorder #2 (Cont)
  - Camcorder, PD100 w/Tape
  - Film, 35mm (27)
  - Lens, PD100 Wide Conversion
  - Recorders
    - V10 w/Tape
    - V10 Digital Video w/Tape
  - Tape, Digital Video (84)
- Pry Bar
- Quick Don Mask (4)

STS-115 MIDDECK STOWAGE

FORWARD LOCKERS

MF14E

Food, Menu
Food, Menu

MF14G

Food, Menu
Food, Menu

MF14H

Food, Menu
Food, Menu

MF14K

Food, Menu
Food, Menu

MF14M

Food, Menu
Food, Menu

MF14O

Food, Menu
Food, Menu

MF28E

Tray, Color Printer (2)
ACTEX (2)
Adapter, Dash 2
Filter, Microbe (Spare)
Hoses
- ACTEX
- Filter Hose Assy

Microbial Check Valve

MF28G

IFM Tools

MF28H

Bag, Saline (2)
Cable, Biomed (2)
Container, Sharps
Kits
- Dosimeter
- Electrode
- Medical Accessory
- Operational Bioinstrumentation System

Restraint (4)

MF28H

(Cont)
Subpacks
- Airway
- Drug
- EENT
- IV Administration
- Saline Supply
- Trauma

MF28K

Bags
- Helmet Stowage (3)
- Inflight Stowage, Restraint (3)
- Jettison Stowage (3)

Bracket, Multiuse (3)
Bungee, Adjustable (5)
Desk, PGSC (3)
Kit, Comm
- Cables
  - Comm, 4 ft
  - Comm, 14 ft
- Mic, Handheld (3)
- VLHS (2)

FORWARD LOCKERS (Cont)

MF28K

(Cont)
Mirror
O2 Bleed Orifice
PIP Pin (12)
PIP Pin, Escape Pole (Spare)
Tape, Gray, 1 in
Tape, Gray, 2 in
Ziplock Bag, 8 in (20)
Ziplock Bag, 12 in (8)

MF28M

Bag, Elbow (9)
Towels (40)
Washcloths (38)

MF28O

Air Sample Bottle (2)
Bag, Chemical Resistant (2)
Breaker Bar, Pallet Removal
Breakout Box
Cushion, Fastener Retainer
Duxseal

MF28O

(Cont)
Kits
- Foam Applicator (2)
- RMS D&C IFM

Lubricant
Turnbuckles (3)

MF43C

Batts
- AA
- BPSMU (3)
- LIDAR (2)

Batt Cap/Fuse Assy
BPSMU
Cables
- BNC-BNC
- BPSMU/CCU Adapter
- PGSC Pwr, 6 ft
- RS-232 HHL Data (2)
- SSV to PDIP/CIP (2)

Kit, SSV Fuse
LIDAR
LIDAR w/Nightscope
SSV Compression Encoder
Transformer, Bal/Unbal

MF43E

Clothing, CDR

MF43G

Bags
- Helmet Stowage (2)
- Inflight Stowage Restraint (6)
- Jettison Stowage (4)

Bungee, Adjustable (2)
Canister, WCS (Coffee Can)
Covers
- HUD (2)
- Parachute (6)

Filter, UV Side Hatch
G-Suit (2)
Hoses
- Personal Hygiene
- WCS Canister

Kit, Shuttle Emergency Eye Wash
Locking Device, Side Hatch
Mirror
Neck Ring Pad (2)
Switch Guard, Computer
Trash Bag, Utility (2)

FORWARD LOCKERS (Cont)

MF43H

G-Suit (4) | SODF

MF43K

Bag, Emesis (13)
Dry Wipes (40 pkg)
Gloves (2 pkg)
Gloves, Shoulder Length (1 pkg)
Prefilter, Conical (20)
Towels (2)
Trash Bag, Coffee Can (8 pkg)
Washcloths (8)
Wet Washes (18 pkg)

MF43M

Adapter, Bends Treatment (BTA)
Batts
- AA (30)
- NiMH (4)

Camera, DCS 760 w/card
Card, PCMCIA Micro Drive, 1 GB
COAS
- Filter Ni-CR

Dosimeter, Audio
Light Shade (2)
Photo Floodlight

MF57A (VOL A)

Food, Pantry
- Accessories
- Utensils

MF57C

Clothing, MS3

MF57E

Food, Fresh
Food, Fresh

MF57G

Clothing, MS2

MF57H

FDF

MF57K

FDF | SODF

MF57M

Clothing, MS4

MF71C

Clothing, PLT

MF71E

CTB, RCC Palettes
- Crack Repair Palette Assy (2)

PHK, Community
Receiver, RF Antenna
Receiver Assy (2)
Relay Assy (3)

MF71G

Cups (24)
Ice Pac (7)

MF71H

Bags (4)
Cable, Pwr DC, 20 ft
Vacuum Cleaner
- Tools
  - Cabin Fan Filter
  - Crevice
  - DDU Filter
  - Flex Hose/Suction Hose
  - Flex Modular
  - Hose Adapter

FORWARD LOCKERS (Cont)

MF71K

Clothing, MS1

MF71M

Clothing, Entry | Crew Care Pkg
Light Stick, Red |

MF71O

ALCO Pad (2)
Braycote
CWC
Hose, Condensate Y-Y
Kits
- CSA-CP
- Docking Mechanism
- Formaldehyde Monitor (FMK)

SUPA, OHS (13)
Towel

AFT LOCKERS

MA9D

Bag Assy, RCC Double Cold
- Cartridge, NOAX (2)
- ICE PAC (9)

MA9F

Drug Pack, Advanced Life Support
Kit, ISS Medical Access (IMAK)
Kit Assy
- Defibrillator Resupply
- ISS PCBA Cartridge
- Surface Sampler

Monitor, CSA-O2 (2)
Packet Assy, Petri Dish (5)

MA9G

Access Point Assy, Proxim
Cables
- A31p Enhanced/Pwr (2)
- OPP-LCS RJ45
- PGSC DC Pwr, 10 ft (2)
- RS-422 Extension
- Video IN/OUT

Card, PC RANGELAN2 (6)

MA9G

(Cont)
PC Board, OCA
PGSC
- STS8 – RSAD/BU LAN

Pwr Supply, DC (3)

MA9J

Adapter, RS-422 (4)
Camera, A31p Ultraport (2)
Card, Dual Port PCMCIA (3)
PGSCs
- STS3 – KFX
- STS4 – DOUG
- STS5 – RPOP

Pwr Supply, DC (4)

MA9L

Batt Charger, EMU Advanced
CD Carry Case
HDD Module Assy (2)
Kit, IVA Ammonia Detection

MA9N

Kit, Personal Hygiene (PHK) (6)
Chem Lights
- Green (27)
- Red (28)

Computer Desk, Inflight (3)
Kit, Contaminant Cleanup
Fiberscope, Video
Fiberscope Light Source
Kit, Re-Entry (2)
Restraints
- Foot Loop (Spare) (6)
- Seat (Spare) (2)

Trash Bag, WMC (Spare)

MA16D

Bag, In-Suit Drink Modified (14)

MA16F

GAP Cylinder (12)
GAP Handle

AFT LOCKERS

MA16G

Batt, HRM (5)
Chest Strap, HRM (2)
Dual Ice Regular (5)
GAP Cylinder (2)
Hand Crank
Kits
- Saliva (3)
- Saliva Collection (5)

Log Books
- SDBI 1490B (5)
- SDBI Sleep

Watch, Actilight (6)

MA16J

Bag, WVS Camcorder
- Adapter, Stereo-to-Mono Audio
- AVIU (2)
- Cables
  - ATU Recorder
  - Balanced Video (4)
  - Digital CC Vid/Pwr, 15 ft (2)
  - PCMCIA/WIB Remote (2)
  - VIU/CM-CC Video, 15 ft (2)
- Card, Dual-Port RS-422
- Recorder, V10 Digital Video w/Tape (2)
- Tape, Digital Video (40)

MA16J

(Cont)
Bag, General Purpose Computer
- Binoculars
  - 8x20 Opera
  - 20x60S
- Bracket, Multiuse (2)
- Bracket Base, Multiuse
- Bracket Clamp, Multiuse (3)
- Camera Mounts
  - Loc-Line Adapter Plate
  - Loc-Line Flex

MA16L

Crew Support

MA16N

Crew Clothing

STS-115 MIDDECK STOWAGE (Cont)

WASTE MGMT COMPARTMENT

Adapter, Urine QD
Bag, Emesis (7)
Prefilter, Conical (20)
Sanitation Agent (2)
Scraper Tool
Towels (36)
Urinal Funnel, Female (Oblong)
Urinal Funnel, Female (Round)
Urinal Funnel, Male (6)
Washcloths (32)
WCS Tool
Bag, Elbow (16)
Clothing, 1st Day (6)
Trash Bag, Aux Wet
Dry Wipes, Multi-Purpose (33 pkg)
Gloves (2 pkg)
Trash Bag, Coffee Can (10 pkg)
Wet Washes (6 pkg)

VOL 3B (MA73J)

Batts
- AAA (14)
- Li-ION (2, 1 installed)
- NiMH (2, 1 installed)

Cable, VIU LCD, 20 ft

VOL 3B (MA73J)

(Cont)
Camcorder, PD100 w/Tape
Camera, DCS 760 w/Card
- Card, PCMCIA, 1 GB

Flash
Lens
- 28-70mm
- 400mm

Monitor, LCD w/Batts
OCAC
Quick Don Mask (2)
Spotlight

VOL D (MD52C)

Adapter, Winch Hook
Caddy, Velcro/Tape
Cutters
- General Purpose
- Tube

Payload Retention Device (2)
PFR Attachment Device
Mitten, Adjustable Thermal (4)
Snatch Block (2)
Socket, PB Articulating
Tether, Adjustable Equipment (2)
Tools
- E.T. Umbilical Door
- RMS Shoulder Brace Release

VOL D (MD52C)

(Cont)
Tool Bags
- 3-Point Latch Stowage
- Centerline Latch

Tool Caddies
- 1/2-in Box Ratchet
- Bolt Pullers/Vise Grip Pliers
- Compound Cutter/Needle Nose Pliers
- EVA Adjustable Wrench 4-in Ratchet Extension
- General Purpose (2)
- Hammer/Chisel Long Probe
- PDU Disc/Loop Pin Puller
- Prybar/EVA Forceps
- Radiator Extension/Drive Ratchet

Trash Bag, EVA (2)
Wrench, MPM Ratchet

VOL E (MD76C)

OFK/PPK

VOL F (MD76M)

Trash Bag, Wet

STS-115 MIDDECK STOWAGE (Cont)

VOL G (MD80R)

Bag, Apollo Fecal (40)
CUCD, Male (54)
CWC (2)
Filter, OBF
Gloves (1 pkg)
Pull-Ups (24)
Ziplock Bag, 13x18 (8)

LiOH VOL (MD52M)

Canisters
- ATCO
- LiOH (29)

EXTERNAL AIRLOCK

PORT
- EMU – EV2 (see EVA C/L)

STBD
- EMU – EV1 (see EVA C/L)

AIRLOCK FLOOR BAG

Bags
- ACBSP
- ISS Photo/TV
- Jettison Stowage (2)

Bolt Retainer, BGA (8)
Cable, EWIS
Camera, EMU RF (ERCA)

AIRLOCK FLOOR BAG

(Cont)
EWIS Handrail Antenna Assy (2)
Hose, Integrated
MWS Key Strap Assy
SGANT KU Antenna Heatshield
Shunting Adapter Assy, SSU
Shunting Plug Assy, SSU (2)
Wire Ties, EVA (45)

VOL H (MD23R)

INBOARD
- See EVA C/L

OUTBOARD
- See EVA C/L

MA12B (WINDOW SHADE BAG)

Bag, Window Shade
- Bag, IFM Cont Hose and Cable Kit
  - Adapter, Yellow/Red
  - Cables
    - AC Pwr Cont Transfer, 15 ft
    - DC Harness, 24 ft (2)
    - DC Pigtail Connector (2)
    - IFM Remote Control
  - Clamp, Various Sizes (14)
  - Gloves, Clean Room

MA12B (WINDOW SHADE BAG)

(Cont)
Bag, Window Shade (Cont)
- Bag, IFM Cont Hose and Cable Kit (Cont)
  - Hoses
    - 1/4 in (6 ft)
    - 3/8 in (6 ft)
    - Cont Blue/Blue
    - Cont Red/Red
    - Cont Yellow/Yellow
    - CWC Contingency
    - O2 Contingency
  - Protective Cover Wireway (3)
  - Water Equipment Assy
    - Filter, Wand Extender Assy
    - Galley Needle (Spare)
    - Separator, Water/Gas (2)
    - Supply Water Dump Line Purge Assy
    - Water Dispenser, Contingency
- Panel Covers
  - A8
    - Fasteners (6)
    - Lower
    - Upper

STS-115 MIDDECK STOWAGE (Cont)

MA12B (WINDOW SHADE BAG)

(Cont)
Bag, Window Shade (Cont)
- Panel Covers (Cont)
  - R2
    - Elastic Tie Downs
    - Snap Ties (2)
    - Standoffs (5)
    - Stiffeners (2)
- Shade, CCTV Monitor (2)
- Window Shades, Ovhd (2)

MIDDECK CEILING

E (PORT 1)
- Allen Driver, 5/32-in Short Ball End
- Caddy, MWS Tool
- Crack Repair Pallet (2)
- EVA Punch Tool
- EVA Thermal Sensor
- EVA Wipes (5)
- Gauge, Ruler & Protuberance
- Gun, Manual Crack Repair w/Thermal Cover (2)
- Kits
  - Emittance Wash Applicator (2)
  - Gel Brush (2)
- Modular MWS RH Swingarm Assy

MIDDECK CEILING

(Cont)
E (PORT 1) (Cont)
- Scrapers
  - RCC CRM 2-in Stiff (4)
  - RCC CRM 5-in Wide (2)
- Tethers
  - 85-ft Safety (2)
  - Adjustable Equipment (3)
  - Body Restraint
  - Retractable Equipment (8)
  - Ring Extender (2)
- Trash Bag, EVA Large
- Valve, Flow Shut Off (2)

F (PORT 2)
- Adapter, DTV Torque (2)
- Bag, Crack Repair
  - EVA Thermal Sensor
  - EVA Wipes (6)
  - Gun, Manual Crack Repair (2)
  - Scrapper, RCC CRM (6)
  - Trash Bag, EVA
- CCC (4)
- Downlink Data MUX
- DTV Tool Pouch
- Vertical Interval Processor
- VTR, Sony–DSR–25
- Wrench, DTV Combination

MIDDECK CEILING

(Cont)
G (STBD 1)
- Batts
  - EHIP
  - PGT (2)
- Communications Center Assy (2)
- Gloves, Phase VI (12)
- Kit, EV Crew Options (2)
- LCVG (3)
- Leg Assy (2)
  - FAR Protective Cover (4)
- Leg Sizing Ring Protective Pouch (2)
  - Leg Sizing Ring, 0.5 in
  - Leg Sizing Ring, 1.5 in
- SAFER Hand Controller
- Tethers
  - Adjustable Fuse (2)
  - Retractable Equipment (2)
  - Waist (4)
- Wrench, Adjustable IVA 6 in
- Wrist Disconnect Protective Cover (12)

STS-115 MIDDECK STOWAGE (Cont)

MIDDECK CEILING

(Cont)

H (STBD 2)
- Bag, Ergometer Accessories
  - Shoes
  - Shorts
- Banner, Boeing
- Baseplate Assy, Modified (2)
- Gimbal Assy, Modified (2)
- MWS, Key Strap Assy
- REBA
- Tethers
  - Adjustable Equipment (2)
  - Adjustable Fuse

MIDDECK FLOOR

A (PORT 1)
- CTB, EMCS EC
  - EMCS EC (12)
- CTB, EMCS/EMU Filters
  - EMCS EC (4)
  - Filter, EMU 3-Micron (4)
- CWC, H2O Xfer (7)
- Defibrillator
- Kits
  - Microbiology Water Analysis (3)
  - Mineral Syringe, H2O Xfer
  - Sample Purge, H2O Xfer
  - Silver Syringe, H2O Xfer

MIDDECK FLOOR

(Cont)

B (PORT 2)
- Bag, Empty 10 MLE

C (STBD 1)
- Camcorder, Sony 750 HDTV
- CTB, Triple Empty
- CTB, Robot Gateway
  - Bar Code Kit
  - Bumper Ring
  - Bumper Ring, Wide Angle Lens
  - Cable
    - Channel A-RHC
    - Channel A-THC
    - Channel B-RHC
    - Channel B-THC
    - ISS, OCA2A
    - NTSC A/V Breakout
    - Rotaiu Pwr
    - RS232
    - Sony HDW-750, Pwr/Signal
  - Crew Restraint Set
  - RHC, ORU Assy-RWS
  - SoRGE Test Kits
    - Flux Core A (4)
    - Flux Core B (4)
    - Solid Core (4)
  - THC, ORU Laptop Support Assy
  - Ziplock Bags, Press-N-Seal (60)
- Crew Preference Ziplock
- Dictionary, English/Russian
- L-Wrench, 1/2-in
- Laptop Support Assy
- Socket, 1/4-in
- Space Video Gateway

STS-115 LIGHTWEIGHT MAR

ML60B

Cables
- CCTV Cabin, 20 ft
- RS-232 PGSC
- TV Controller/CIP
- TV Controller/CTVM

Camera, Centerline (Prime)
Feeler Gauge (4)
Harness, Camera (Prime)
Screw/Washer Assy
TVCU

ML60E

Adapter
- BNC-RCA Phono
- BNC Straight
- RS-422 (2)

Cables
- Ethernet, 3 ft (2)
- Ethernet, 25 ft (2)
- Fuel Cell PCMMU (2)
- OCA Interface, 25 ft
- PCMMU, 24 ft
- PDIP RS-422 Y Data, 24 ft
- PGSC DC Pwr, 6 ft (3)
- PGSC DC Pwr,10 ft
- PGSC DC Pwr, 25 ft
- RS-422 Extension, 10 ft
- RS-422 Y, 15 ft

ML60E

(Cont)
Cables (Cont)
- Video IN/OUT
- VIU/CM-CC Video, 15 ft
- VLHS to VTS Interface (2)

Cards
- Dual Port PCMCIA RS-422 (4)
- Ethernet PCMCIA Adapter (5)
- EVA Flash Memory (15)
- Micro Drive Assy PCMCIA (8)
- TRIPORT PCMCIA RS-422/MCIU (2)

Disk Case, External Floppy (2)
- Disk, Removable Floppy

Ethernet T Connector (2)
Ethernet Terminator
Expansion Unit Assy, Selectadock 1
STS-1 OCA Router
STS-2 PCMMU/WINDECOM
STS-6 CREWMAIL/World Map
STS-7 RSAD

ML60J

Assy, TRAD
- Bag, CIPAA Containment
- CIPAA Sack, Multipurpose (2)

Ethernet T Connector
Nozzle Assy

ML60J

(Cont)
Printer, Color w/Cartridge
- AC W Pwr
- Cables
  - Ethernet, 3 ft
  - Extension AC, 15 ft
  - Parallel Data, 25 ft
- Ink Cartridges
  - Black (2)
  - Color (2)
- Paper, Color Printer (2)

Washcloth

ML60M

Camera, Centerline (Backup)
Harness, Camera (Backup)
Leak Detector, Ultrasonic
- Acoustic Tip
- Adapter
- Batt, 9V (2)
- Concentrator
- Extension Probe (3)
- Headset
- Receiver
- Transmitter

STS-115 CONSUMABLES

Item	Location		Total Qty
Contingency Urine/Fecal Collection Devices:			
CUCDs (male)	Vol G (MD80R)		54
Apollo Fecal Bags	Vol G (MD80R)		40
Pull-Ups	Vol G (MD80R)		24
Dry Wipes, Multi-Purpose (24/pkg) (22/cm/day)	Waste Mgmt Compartment	33 pkg	792
	MF43K	40 pkg	960
			1752
Elbow Bags	Waste Mgmt Compartment		16
	MF28M		9
			25
Emesis Bags	Waste Mgmt Compartment		7
	MF43K		13
			20
Gloves (50/pkg) (2/cm/day)	Waste Mgmt Compartment	2 pkg	100
	Vol G (MD80R)	1 pkg	50
	MF43K	2 pkg	100
			250
Gloves, Shoulder Length	MF43K	1 pkg	25
Prefilters, Conical	Waste Mgmt Compartment		20
	MF43K		20
			40
Sanitation Agent	Waste Mgmt Compartment	bottles	2
SUPA, OHS	MF71O		13
Towels (1/cm/day)	Waste Mgmt Compartment		36
	MF28M		40
	MF43K		2
			78
Trash Bags (Coffee Can Bags) (10/pkg) (2/cm/day)	Waste Mgmt Compartment	10 pkg	100
	MF43K	8 pkg	80
			180

NOTE: The qty/day is based on 6 crewmembers and 13 days

STS-115 CONSUMABLES (Cont)

Item	Location		Total Qty
Washcloths	Waste Mgmt Compartment		32
(1/cm/day)	MF28M		38
	MF43K		8
			78
Wet Washes – (40/pkg)	Waste Mgmt Compartment	6 pkg	240
(12/cm/day)	MF43K	18 pkg	720
			960

NOTE: The qty/day is based on 6 crewmembers and 13 days