# STS-114/LF1

## *FD 07 Execute Package*

| MSG | Page(s) | Title |
|---|---|---|
| 059A | 1 - 16 | FD07 Flight Plan Revision **(pdf)** |
| 060 | 17 - 18 | FD07 Mission Summary **(pdf)** |
| 061 | 19 - 40 | FD07 Transfer Message **(pdf)** |
| 062A | 41 | FD07 EVA 2 Procedure Updates **(pdf)** |
| 063 | 42 - 50 | Middeck Stowage Bag Maps **(pdf)** |
| 064 | 51 - 71 | FD06 MMT Summary **(pdf)** |
| 065A | 72 | FD07 Water Activity Summary **(pdf)** |

***Approved by FAO:*** *L. DeLapp*
***OPS Plan:*** *J. Alape*

*Last Updated: Aug 1 2005 12:50AM GMT*
***JEDI*** *(**J**oint **E**xecute package **D**evelopment and **I**ntegration), v2.04.0003*

MSG INDEX


| MSG NO. | TITLE |
|---|---|
| 59 | FD07 Flight Plan Revision |
| 60 | FD07 Mission Summary (11-0677) |
| 61 | FD07 Transfer Message (11-0678) |
| 62 | FD07 EVA 2 Procedure Updates (11-0680A) |
| 63 | Middeck Stowage Bag Maps (11-0681) |
| 64 | FD06 MMT Summary (11-0682) (Electronic Only) |
| 65 | FD07 Water Activity Summary |


1. Post Sleep Cryo Config

   On MCC go:

   R1 CRYO O2,H2 MANF VLV TK2 (two) - OP (tb - OP)

   After next step, expect message S68 O2 TK P 4.

   A11 CRYO TK4 HTRS O2,H2 A, B (four) - AUTO

   A15 CRYO TK5 HTR O2 A - OFF
   H2 A,B (two) - OFF

   On MCC go:

   A11 CRYO TK4 HTRS O2 B - OFF

2. Good luck to the EVA guys. Wanted to remind you that your complement of TCUs is three, the same as the number of nominally scheduled EVAs. Looking ahead, it may be a good idea to make sure that your TCUs from either EVA 1 or 2, be placed in a location to allow them to dry in support of a possible EVA 4.

3. The following are recommendations to the EVA Crewmembers for closing the Shuttle airlock hatch:

   a. Do not use the actuator handle to pull the hatch closed as it is not designed for the pull load.
   b. Do not use the hatch hinges to pull the hatch closed as these are potential pinch points.
   c. The latch pushrods around the perimeter of the hatch are acceptable handholds. A tether (cloth portion) may be looped around the pushrods to provide an easier grasp.

   Please use your best effort to obtain video of the hatch closure.

   STS-121 EVA crewmembers were involved in generating these recommendations.

4. During your maneuver to the CMG R&R Setup Position yesterday, we noticed in the downlinked video that the tool stanchion attached to the APFR in Node 1 WIF 5 is in an unexpected configuration. We have run through procedure 1.512 EVA - CMG R&R with the tool stanchion in a configuration that closely matches the downlinked video and are confident that there will be no clearance issues. The clearance between the SSRMS Tip Boom and the tool stanchion is expected to be greater than 3 feet the entire time you're maneuvering around the Z1 worksite. The SSRMS Base Elbow camera provides an excellent clearance view.

5. The Wing Leading Edge Sensors (WLES) continue to function nominally. Despite the cold temperatures, units in the STBD wing continue to respond (exceeding our expectations). Since our last report, the WLES team has been conducting a series of environment and systems characterization tests that are designed to confirm the sensor settings for on-orbit operations. The final round of these characterizations began last night during your sleep. Once the characterizations are complete, we will begin continuous or near-continuous on-orbit operations until WLES battery capacity is depleted.

6. There are no exercise constraints for FD07

7. REPLACE PAGES 2-14A THROUGH 2-15B AND 3-68 THROUGH 3-77.

07/31/05 18:55:31 **REPLANNED**

GMT 08/01/05 (213) 03 04 05 06 07 08 09 10 11 12 13 14

MET Day 005 12 13 14 15 16 17 18 19 20 21 22 23 006/00

**STS-114**

| | | |
|---|---|---|
| CDR COLLINS | SLEEP | **FD07** POST SLEEP; OIU; PMC A/G; 10.2*; POST SLEEP; EXERCISE; EVA2 INHBT; DAP13; ATTHO*; 14.7 REPR; ATTHO*; DAP12; CWC INIT9; CWC TERM; CWC INIT10; MEAL; CWC TERM; CWC INIT11; CWC TERM; DAP13; ATTHO*; WVSPD |
| PLT KELLY | SLEEP | SALIVA; POST SLEEP; FCMS C/O; EXERCISE; ISS; INGRS; RWS; EVA SSRMS SUPPORT; ISS; EGRS |
| MS1 NOGUCHI | SLEEP | POST SLEEP - GIRA; EVA PREP; EMU PURGE P/B; DEPRS; EGRS/ SETUP; **EVA 2 (6:30)** EVA2 CMG R&R; CLEANUP/ INGRESS |
| MS2 ROBINSON | SLEEP | POST SLEEP; EVA PREP; EMU PURGE P/B; DEPRS; EGRS/ SETUP; EVA2 CMG R&R; CLEANUP/ INGRESS |
| MS3 THOMAS | SLEEP | POST SLEEP; EVA PREP; EMU PURGE P/B; DEPRS; IVA SUPPORT |
| MS4 LAWRENCE | SLEEP | SALIVA; LOG; POST SLEEP; EVA PREP; XFER REVIEW; P/TV07 EVA S/U; EXERCISE; ISS; INGRS; RWS; EVA SSRMS SUPPORT; ISS; EGRS |
| MS5 CAMARDA | SLEEP | SALIVA; LOG; POST SLEEP; 10.2*; POST SLEEP; XFER REVIEW; EXERCISE; 14.7 REPR; TRANSFER; MEAL; TRANSFER |

**ISS**

| | | |
|---|---|---|
| ISS CDR KRIKALEV | SLEEP | POSTSLEEP-ISS; PROEP WORK; DPC; ♣; PROEP WORK; COЖ; XFER REVIEW; TVIS; TRANSFER; MIDDAY-MEAL; TRANSFER |
| FE-1 PHILLIPS | SLEEP | POSTSLEEP-ISS; PROEP WORK; DPC; PROEP WORK; BSA-T; ⊕; TVIS; EXERCISE RED; TRANSFER; MIDDAY-MEAL; TRANSFER |

DAY/NIGHT

ORBIT 88 89 90 91 92 93 94 95

TDRS E -46.0 W -171.0 Z -275.0

ORB ATT BIAS -XLV -ZVV

NOTES

♣СОГС-БМП-Ф1-МНТ-INIT *CMG TO STS *CMG TO STS

*10.2 MAINT ⊕EVA-EQUIP-LOCK-CNFG *STS TO CMG

*10.2 MAINT 2-14A FLT PLN/114/FLIGHT

# ISS-11 SHORT TERM PLAN PAYLOAD PAGE

CT 07/31/05 (212) 22 03 | 23 04 | 08/01 05 | 01 06 | 02 07 | 03 08 | 04 09 | 05 10 | 06 11 | 07 12 | 08 13 | 09 14

GMT 08/01/05 (213)

**ISS**

| | | | | | | | | |
|---|---|---|---|---|---|---|---|---|
| DAY/NIGHT | | | | | | | | |
| ORBIT | 2275 | 2276 | 2277 | 2278 | 2279 | 2280 | 2281 | 2282 |
| DAILY ORBIT | 15 | 16 | 1 | 2 | 3 | 4 | 5 | 6 |
| TDRS AVAIL | | | | | | | | |
| VHF | ALL VHF | ALL VHF | ALL VHF | ALL VHF | ALL VHF | ALL VHF | ALL VHF | |

**KUSYS**

LOCK-OPS-RECORDER
IMS-AUTO-IMPRT/EXPRT
OCA-MAIL-SYNC

**SBD**

UHF-1-ACT
RS-CONTG-TLM
AUDIO-UHF OPS-CNFG
ACS-INH-AUTO-H/O-RS
AR-MCA ZERO-CAL
DPC
MSS-POWERUP
C&T-VIDEO CNFG
EVA2 INHIBIT PAD
ACS-CMG-DATA-DUMP
O2-HP-VLV-OPEN
FMS-CALIBRATION
ISS-RAP DPRS-INH
ACS-CMG/STS ATT-H/O
LOCK-OPS-RECORDER
ACS-STS/CMG ATT-H/O
ACS-AH-MOM-MGMT-USTO
CMG-SAT-THRSHOLD
ACS-CMG1-SHUTDOWN
ISS-RAP DPRS-ENA
SSRMS-OCAS-DUMP
CMG1-ON-ORBIT-C/O
CPO-MAMS DATA-D/L
ACS-CMG1 STARTUP
C&T-VIDEO-DECONFG

**UNTPL**

PCG STES-010-GROWTH
EXPRS1-SYS-PWR/THERM
EXPRS4-SYS-PWR/THERM
MAMS-P/L-NOM OPS
SAMS-ICU/D1-OPS
SAMS-RTS/D1-OPS
SAMS-RTS/D2-OPS
PRO-EXPRS FILE-CMD
CPO-MAMS DATA-D/L

**RS**

**MCC**

MCC-H FCT H/O (3/1)
RS-CONTG-TLM
MCC-M EVA2 INH COMPL
MCC-H FCT H/O (1/2)
ACS-STS/CMG ATT-H/O
ACS-AH-MOM-MGMT-USTO

ISS ATTITUDE: -XVV +ZLV TEA

*CMG TO STS
*STS TO CMG
*STS TO CMG
*CMG TO STS

NOTES:

07/31/05 18:55:31 **REPLANNED**

GMT 08/01/05 (213) FD7 | MET Day 006

| | | 006/00 | 01 | 02 | 03 | 04 | 05 | 06 | 07 | 08 | 09 | 10 | 11 | 12 |
|---|---|---|---|---|---|---|---|---|---|---|---|---|---|---|
| STS-114 | CDR COLLINS | ATTHO* / DAP12 | XFER 3 CWC | | PRE SLEEP | | PMC A/G | PRE SLEEP | | SLEEP | | | | |
| STS-114 | PLT KELLY | INGRS / POST | TRANSFER | | PRE SLEEP | | | | | SLEEP | | | | |
| STS-114 | MS1 NOGUCHI | ♣ / RPRS | POST EVA W/H2O | | PRE SLEEP - GIRA | | | | | SLEEP | | | | |
| STS-114 | MS2 ROBINSON | ⊕ / RPRS | POST EVA W/H2O | | TETHER / REBA-I | PRE SLEEP | | | | SLEEP | | | | |
| STS-114 | MS3 THOMAS | ♦ / RPRS | POST EVA W/H2O | | TETHER / REBA-I | PRE SLEEP | | | | SLEEP | | | | |
| STS-114 | MS4 LAWRENCE | INGRS / POST | TRANSFER | | PRE SLEEP | | | | | SLEEP | | | | |
| STS-114 | MS5 CAMARDA | DCS DIS ASSY | TRANSFER | | PRE SLEEP | XFER / TAGUP / XFER / CALL | | PRE SLEEP | | SLEEP | | | | |
| ISS | ISS CDR KRIKALEV | VELO + HC | DAILY PLN RVW | PREP / WORK | ® | DPC | XFER / TAGUP | ♥ | Δ | PRESLEEP-ISS | | SLEEP | | |
| ISS | FE-1 PHILLIPS | TRANSFER | ♠ | PREP / WORK | DAILY / PRVW | DPC | PRESLEEP-ISS | | | | | SLEEP | | |

DAY/NIGHT

ORBIT: 96 | 97 | 98 | 99 | 100 | 101 | 102 | 103

TDRS: E -46.0, W -171.0, Z -275.0

ORB ATT: BIAS -XLV -ZVV

NOTES

♣CLEANUP/ INGRESS ®PRESLEEP-ISS ♥PRESLEEP-ISS
⊕CLEANUP/ INGRESS ΔСОГС-БМП-Ф1-MNT-END
♦IVA SUPPORT ♠EVA-EQUIP-LOCK-DCNFG 2-15A
*STS TO CMG

FLT PLN/114/FLIGHT

# ISS-11 SHORT TERM PLAN PAYLOAD PAGE

CT 08/01/05 (213) 10 11 12 13 14 15 16 17 18 19 20 21

GMT 08/01/05 (213) 15 16 17 18 19 20 21 22 23 08/02 01 02

**ISS**

| | | | | | | | | |
|---|---|---|---|---|---|---|---|---|
| DAY/NIGHT | | | | | | | | |
| ORBIT | 2283 | 2284 | 2285 | 2286 | 2287 | 2288 | 2289 | 2290 |
| DAILY ORBIT | 7 | 8 | 9 | 10 | 11 | 12 | 13 | 14 |
| TDRS AVAIL | | | | | | | | |
| VHF | | | | | ALL VHF | ALL VHF | ALL VHF | ALL VHF |

**KU SYS**

- LOCK-OPS-RECORDER: LOCK-OPS-RECORDER
- OCA-MAIL-SYNC: OCA-MAIL-SYNC; OCA-MAIL-SYNC
- IMS-AUTO-IM/EX W/PIP: IMS-AUTO-IM/EX W/PIP
- CHECS-KU-D/L: CHECS-KU-D/L

**SBD**

- ACS-CMG-DATA-DUMP: ACS-CMG-DATA-DUMP
- LOCK-OPS-RECORDER: LOCK-OPS-RECORDER
- C&T-VIDEO-DECONFG: C&T-VIDEO-DECONFG
- ISS-RAP DPRS-INH: ISS-RAP DPRS-INH
- ACS-STS/CMG ATT-H/O: ACS-STS/CMG ATT-H/O
- RS-CONTG-TLM: RS-CONTG-TLM; RS-CONTG-TLM; RS-CONTG-TLM
- MSS-POWERDOWN: MSS-POWERDOWN
- ACS-AH-MOM-MGMT-USTO: ACS-AH-MOM-MGMT-USTO
- IMV-DPRS-ENA: IMV-DPRS-ENA
- CMG-SAT-THRSHOLD: CMG-SAT-THRSHOLD
- UHF-1-DEACT: UHF-1-DEACT
- O2-HP-VLV-CLOSE: O2-HP-VLV-CLOSE
- AUDIO-UHF OPS-DCNFG: AUDIO-UHF OPS-DCNFG
- DPC: DPC
- ACS-ENA-AUTO-H/O-RS: ACS-ENA-AUTO-H/O-RS
- ACS-GNC-PPL-UPDATE: ACS-GNC-PPL-UPDATE
- CHECS-COMMANDING: CHECS-COMMANDING; CHECS-COMMANDING
- CDH-WEEKLY FILE-D/L: CDH-WEEKLY FILE-D/L
- ACS-CMG-SPINUP: ACS-CMG-S
- ACS-CMG-SURV-HTR-CL: ACS-CMG-SURV-HTR-CL
- SPS-DDCU-BDT: SPS-DDCU-BDT
- SBD-KEY-CHG: SBD-KEY-CHG

**UNTPL**

- PCG STES-010-GROWTH: PCG STES-
- EXPRS1-SYS-PWR/THERM: EXPRS1-SY
- EXPRS4-SYS-PWR/THERM: EXPRS4-SY
- MAMS-P/L-NOM OPS: MAMS-P/L-
- SAMS-ICU/D1-OPS: SAMS-ICU/
- SAMS-RTS/D1-OPS: SAMS-RTS/
- SAMS-RTS/D2-OPS: SAMS-RTS/
- PRO-EXPRS FILE-CMD: PRO-EXPRS FILE-CMD; PRO-EXPRS FILE-CMD

**RS**

**MCC**

- RS-CONTG-TLM: RS-CONTG-TLM; RS-CONTG-TLM; RS-CONTG-TLM
- ACS-AH-MOM-MGMT-USTO: ACS-AH-MOM-MGMT-USTO
- MCC-H FCT H/O (2/3): MCC-H FCT H/O (2/3)
- CHECS-COMMANDING: CHECS-COMMANDING; CHECS-COMMANDING
- CHECS-KU-D/L: CHECS-KU-D/L
- MCC-H FCT H/O (3/1): MCC-H FCT

ISS ATTITUDE: -XVV +ZLV TEA

*STS TO CMG

NOTES:

# STS-114 LF1 (FD 07)

**REPLANNED**

GMT Date 08/01 (213) | TDRS E W Z | ORB | MET Day 005 | STS ATI

**FD07**

| CDR COLLINS | PLT KELLY | MS1 NOGUCHI | MS2 ROBINSON | MCC |
|---|---|---|---|---|
| SLEEP | SLEEP | SLEEP | SLEEP | |
| | SALIVA COLLECT (ORB OPS, DSO) | | | |
| | **FD07 EZ ACTIVITIES**<br>**HARD REBOOT PGSCs (not WLES)**<br>OCAC FILTER INSPECT<br>TEPC (STATUS CK)<br>(ORB OPS, CREW SYS)<br>L17 Check MCIU Filter Screen | | | |
| POST-SLEEP ACTIVITY (ORB OPS, CREW SYS) | | POST SLEEP ACTIVITY (ORB OPS, CREW SYS)<br>GALLEY MORNING CONFIG (ORB OPS, ECLS) | POST-SLEEP ACTIVITY (ORB OPS, CREW SYS) | |
| OIU ACTIVATION (ORB OPS, OIU)<br>OIU-1 Step 3 ONLY | POST-SLEEP ACTIVITY (ORB OPS, CREW SYS) | | | |
| 06 √UHF MODE - OFF<br>A/G PRIVATE MEDICAL CONFERENCE | | | | |
| 10.2 PSI MAINTENANCE (EVA, 10.2 PSI CABIN) | | EVA PREP (EVA, EVA PREP) REF. MSG 021 ITEM 11 | EVA PREP (EVA, EVA PREP) REF. MSG 021 ITEM 11 | |
| POST-SLEEP ACTIVITY (ORB OPS, CREW SYS) | | | | |
| | FC MONITORING SYS (FCMS) OPS (ORB OPS, EPS) | | | |
| EXERCISE | | | | |

BIAS-XLV-ZVV

88 89 90

# STS-114 LF1 (FD 07)

**REPLANNED**

GMT Date 08/01 (213) | T D R S E W Z | O R B | MET Day 005 | STS ATI

**FD07**

| MS3 THOMAS | MS4 LAWRENCE | MS5 CAMARDA | MCC |
|---|---|---|---|
| SLEEP | SLEEP | SLEEP | |
| | SALIVA COLLECT (ORB OPS, DSO) | SALIVA COLLECT (ORB OPS, DSO) | |
| | FLIGHT SLEEP LOG (ORB OPS, DSO) | FLIGHT SLEEP LOG (ORB OPS, DSO) | |
| POST-SLEEP ACTIVITY (ORB OPS, CREW SYS) | POST-SLEEP ACTIVITY (ORB OPS, CREW SYS) | POST-SLEEP ACTIVITY (ORB OPS, CREW SYS) | |
| | | 10.2 PSI MAINTENANCE (EVA, 10.2 PSI CABIN) | |
| EVA PREP (EVA, EVA PREP) REF. MSG 021 ITEM 11 | EVA PREP (EVA, EVA PREP) REF. MSG 021 ITEM 11 | | |
| | | POST-SLEEP ACTIVITY (ORB OPS, CREW SYS) | |

BIAS-XLV-ZVV

Time axis: 12:00, 13:00, 14:00, 15:00, 16:00; GMT 03:00, 04:00, 05:00, 06:00; ORB 88, 89, 90

# STS-114 LF1 (FD 07)

**REPLANNED**

GMT Date 08/01 (213) | TDRS E W Z | ORB 90 91 92 93 | MET Day 005 | STS ATI

**CDR COLLINS**

EXERCISE

EVA 2 INHIBIT PAD
(EVA, EVA 2)

√DAP:FREE
Config DAP A,B to A13,B13 [A]
3.110 H/O ATT CONTROL CMG TO ORB
(JOINT OPS, MATED OPS)

BIAS-XLV-ZVV

CABIN REPRESS TO 14.7 PSI
(EVA, 10.2 PSI CABIN)
Steps 1-4 ONLY
MCC will TMBU S/W limits

3.111 H/O ATT CONTROL ORB TO CMG
(JOINT OPS, MATED OPS)

√DAP:FREE
ON MCC GO:Config DAP A,B to A12,B12

SHUTTLE/ISS H2O CONT FILL
(ORB OPS, ECLS) INIT #9
REF. MSG 065

SHUTTLE/ISS H2O CONT FILL
(ORB OPS, ECLS) TERM
Report Barcode & S/N to MCC

**PLT KELLY**

EXERCISE

ISS INGRESS-POST A/L DEPRESS
(EVA, DEPRESS/REPRESS)

RWS CONFIG

1.512 EVA - CMG R&R
(ROBOTICS, CMG R&R EVA SPT)

[A] WAIT a minimum of 30 secs after new DAP loads configured prior to procedural callout for DAP:AUTO

**MS1 NOGUCHI**

EMU PURGE/PREBREATHE
(EVA, EVA PREP)
REF. MSG 021 ITEM 12

AIRLOCK DEPRESS
(CUE CARD, DEPRESS/REPRESS)

EVA 2 EGRESS/SETUP
(EVA, EVA 2)

CMG R&R
(EVA, EVA 2)
REF. MSG 062

**MS2 ROBINSON**

EMU PURGE/PREBREATHE
(EVA, EVA PREP)
REF. MSG 021 ITEM 12

AIRLOCK DEPRESS
(CUE CARD, DEPRESS/REPRESS)

EVA 2 EGRESS/SETUP
(EVA, EVA 2)

CMG R&R
(EVA, EVA 2)
REF. MSG 062

**MCC**

UPLINK
30° + C1,C2,C3
BOX C1
-19<AZ<52
-67<EL<75
BOX C2
-41<AZ<-10
-25<EL<39
BOX C3
-72<AZ<-36
-4<EL<33

# STS-114 LF1 (FD 07)

**REPLANNED**

GMT Date 08/01 (213) | TDRS E W Z | ORB | MET Day 005 | STS ATI

MS3 THOMAS | MS4 LAWRENCE | MS5 CAMARDA | MCC

16:00

EMU PURGE/PREBREATHE
(EVA, EVA PREP)
REF. MSG 021 ITEM 12

TRANSFER REVIEW
Update Transfer List
per MSG 061

TRANSFER REVIEW
Update Transfer List
per MSG 061

07:00

P/TV07 EVA (SETUP)
(PHOTO/TV, SCENES)
CONFIG DTV FOR DNLK
L10(MUX) √MUX BYPASS - ACT
MUX/VTR/CC PWR - ON

EVA 2 INHIBIT PAD
(EVA, EVA 2)

17:00

EXERCISE

08:00

AIRLOCK DEPRESS
(CUE CARD, DEPRESS/REPRESS)

EXERCISE

CABIN REPRESS TO 14.7 PSI
(EVA, 10.2 PSI CABIN)
Steps 1-4 ONLY
MCC will TMBU S/W limits

18:00

ISS INGRESS-POST A/L DEPRESS
(EVA, DEPRESS/REPRESS)

09:00

RWS CONFIG

TRANSFER
Ref. MPLM TRANSFER LIST

IVA SUPPORT FOR EVA

19:00

1.512 EVA - CMG R&R
(ROBOTICS, CMG R&R EVA SPT)

10:00

MEAL

20:00

BIAS-XLV-ZVV

# STS-114 LF1 (FD 07)

**REPLANNED**

GMT Date 08/01 (213) | TDRS E W Z | ORB | MET Day 005 | STS ATI

## CDR COLLINS

- SHUTTLE/ISS H2O CONT FILL (ORB OPS, ECLS) INIT #10 REF. MSG 065
- MEAL
- SHUTTLE/ISS H2O CONT FILL (ORB OPS, ECLS) TERM Report Barcode & S/N to MCC
- SHUTTLE/ISS H2O CONT FILL (ORB OPS, ECLS) INIT #11 REF. MSG 065
- SHUTTLE/ISS H2O CONT FILL (ORB OPS, ECLS) TERM Report Barcode & S/N to MCC
- √DAP:FREE Config DAP A,B to A13,B13 [A]
- 3.110 H/O ATT CONTROL CMG TO ORB (JOINT OPS, MATED OPS)
- WVS PWRDN (PHOTO/TV, CUE CARD)

## PLT KELLY

- 1.512 EVA - CMG R&R (ROBOTICS, CMG R&R EVA SPT)
- ISS EGRESS FOR SHUTTLE EVA (EVA, DEPRESS/REPRESS)

## MS1 NOGUCHI

- CMG R&R (EVA, EVA 2) REF. MSG 062
- CLEANUP/INGRESS (EVA, EVA 2)

## MS2 ROBINSON

- CMG R&R (EVA, EVA 2) REF. MSG 062
- CLEANUP/INGRESS (EVA, EVA 2)

## MCC

BIAS-XLV-ZVV

[A] WAIT a minimum of 30 secs after new DAP loads configured prior to procedural callout for DAP:AUTO

# STS-114 LF1 (FD 07)

**REPLANNED**

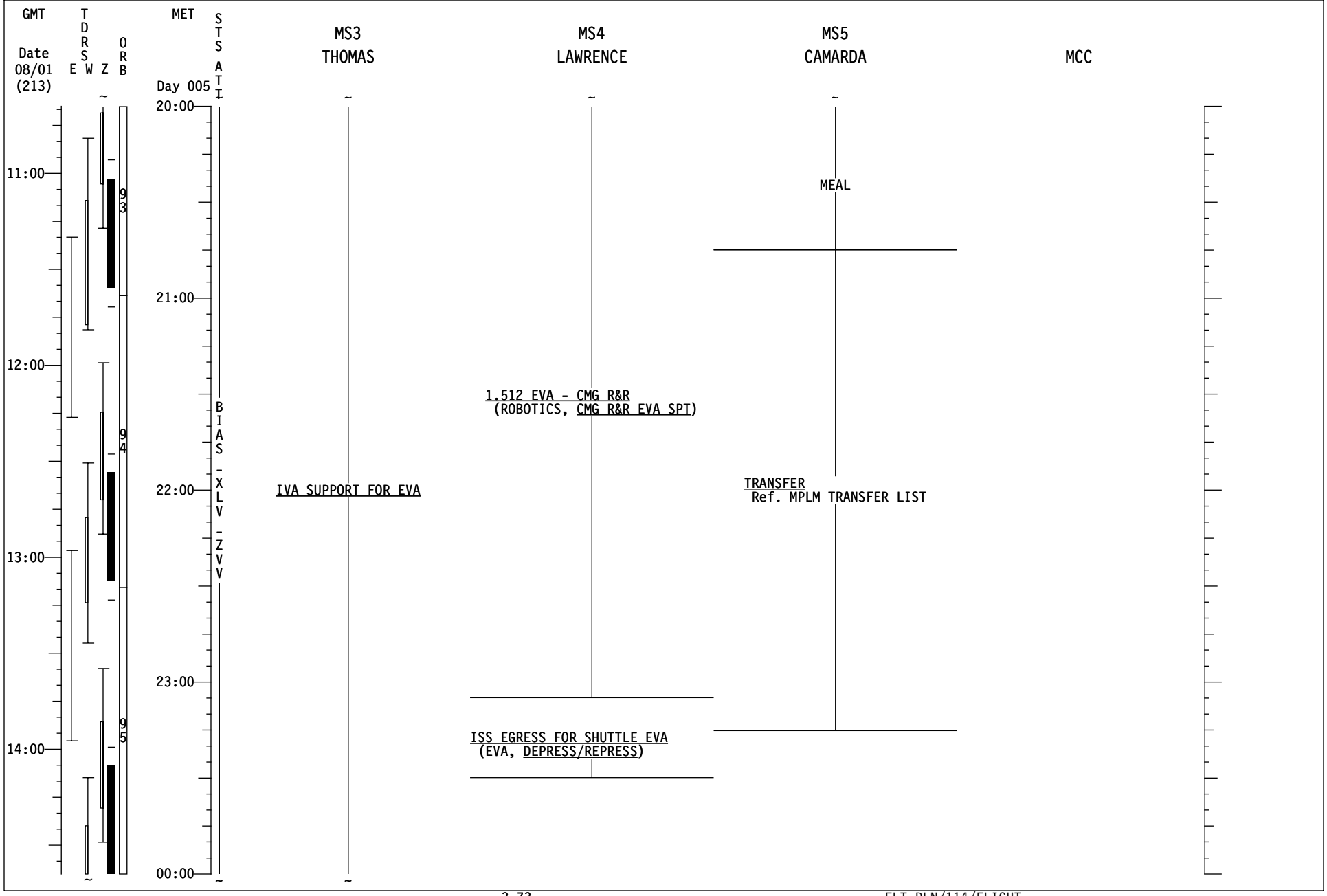

# STS-114 LF1 (FD 07)

**REPLANNED**

GMT Date 08/01 (213) | TDRS E W Z | ORB | MET Day 006 | STS ATI

## CDR COLLINS

3.111 H/O ATT CONTROL ORB TO CMG
(JOINT OPS, MATED OPS)
√DAP:FREE
On MCC GO: Config DAP A,B to A12,B12
CWC TRANSFER
Xfer 3 CWC bags to ISS

BIAS-XLV-ZVV
√ HUM SEP FOR H2O ACCUMULATION

PRE-SLEEP ACTIVITY
(ORB OPS, CREW SYS)

06 √UHF MODE - OFF
A/G PRIVATE MEDICAL CONFERENCE

PRE-SLEEP ACTIVITY
(ORB OPS, CREW SYS)

## PLT KELLY

ISS INGRESS-POST EVA
(EVA, DEPRESS/REPRESS)
Do not perform Step 14

TRANSFER
Ref. MPLM TRANSFER LIST

LDRI STATUS CHECK:
R12(VPU) Green Jumper - LDRI/ITVC
R12(OBSS) ITVC ENA - ON

PRE-SLEEP ACTIVITY
(ORB OPS, CREW SYS)

CONFIG ODS DRAG THROUGHS FOR SLEEP

## MS1 NOGUCHI

CLEANUP/INGRESS
(EVA, EVA 2)
AIRLOCK REPRESS
(CUE CARD, DEPRESS/REPRESS)
POST EVA
(EVA, POST EVA)
PERFORM:
EMU WATER RECHARGE/FILL VERIF

PRE-SLEEP ACTIVITY
(ORB OPS, CREW SYS)

GALLEY OVERNIGHT CONFIG
(ORB OPS, ECLS)

## MS2 ROBINSON

CLEANUP/INGRESS
(EVA, EVA 2)
AIRLOCK REPRESS
(CUE CARD, DEPRESS/REPRESS)
POST EVA
(EVA, POST EVA)
PERFORM:
EMU WATER RECHARGE/FILL VERIF

STOW EXPIRED SAFETY TETHERS
IN CTB

PRE-SLEEP ACTIVITY
(ORB OPS, CREW SYS)

## MCC

UPLINK
β21°+C1,C2,C3
BOX C1
-19<AZ<52
-67<EL<75
BOX C2
-41<AZ<-10
-25<EL<39
BOX C3
-72<AZ<-36
-4<EL<33

# STS-114 LF1 (FD 07)

**REPLANNED**

GMT Date 08/01 (213) | TDRS E W Z | ORB | MET Day 006 | STS ATI

MS3 THOMAS

00:00
IVA SUPPORT FOR EVA
AIRLOCK REPRESS
(CUE CARD, DEPRESS/REPRESS)
POST EVA
(EVA, POST EVA)
PERFORM:
EMU WATER RECHARGE/FILL VERIF

BIAS-XLV-ZVV
REBA BATTERY RECHARGE (INIT-In suit)
(EVA, EMU MAINT/RECHARGE)

PRE-SLEEP ACTIVITY
(ORB OPS, CREW SYS)

MS4 LAWRENCE

ISS INGRESS-POST EVA
(EVA, DEPRESS/REPRESS)
Do not perform Step 14
TRANSFER
Ref. MPLM TRANSFER LIST

PRE-SLEEP ACTIVITY
(ORB OPS, CREW SYS)

MS5 CAMARDA

SETUP: 760 EVA-CAMR W/FLASH
DISASSEMBLY (BETWEEN EVA)
(PHOTO/TV, DCS 760 EVA)
TRANSFER
Ref. MPLM TRANSFER LIST

PRE-SLEEP ACTIVITY
(ORB OPS, CREW SYS)
DAILY STS/ISS CREW
TRANSFER TAGUP
DAILY TRANSFER BRIEFING

PRE-SLEEP ACTIVITY
(ORB OPS, CREW SYS)

MCC

15:00 16:00 17:00 18:00
01:00 02:00 03:00 04:00
96 97 98

# STS-114 LF1 (FD 07)

**REPLANNED**

GMT Date 08/01 (213) | T D R S E W Z | O R B | MET Day 006 | STS ATI

CDR COLLINS | PLT KELLY | MS1 NOGUCHI | MS2 ROBINSON | MCC

04:00

PRE-SLEEP ACTIVITY (ORB OPS, CREW SYS)

PRE-SLEEP ACTIVITY (ORB OPS, CREW SYS)

CONFIG ODS DRAG THROUGHS FOR SLEEP

PRE-SLEEP ACTIVITY (ORB OPS, CREW SYS)

GALLEY OVERNIGHT CONFIG (ORB OPS, ECLS)

PRE-SLEEP ACTIVITY (ORB OPS, CREW SYS)

19:00 — 98

**CREW WAKEUP MET 6/12:30**

05:00

20:00 — 99

BIAS -XLV -ZVV

06:00

SLEEP | SLEEP | SLEEP | SLEEP

21:00

07:00 — 100

22:00

08:00 — 101

# STS-114 LF1 (FD 07)

**REPLANNED**

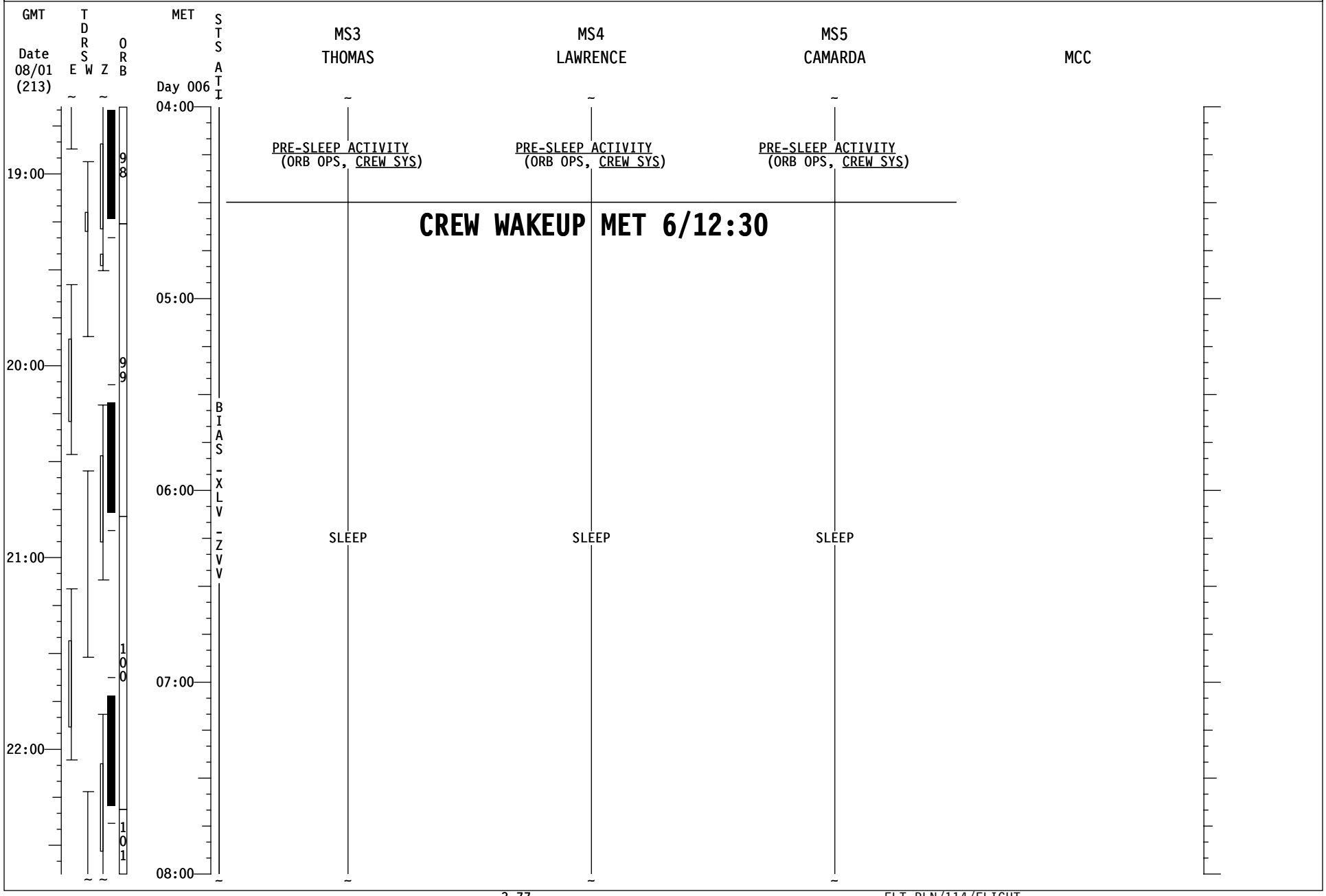

Good Morning Discovery!

Yesterday was another super day. Who would have thought that transfer could have been made to appear effortless! (Don't worry, we are cognizant of the attention to detail on your part that made this day go so smoothly. Thank you.)

Rack transfers are always amazing to watch from the ground. We look forward to a great day of MPLM packing tomorrow. Thanks for incarcerating the return bags in the MPLM.

All forecasts indicate that today will be a great day for a space stroll for a couple of EVA veterans. Enjoy your time outside.

You will see that there are some minor changes in today's EVA to better position us for potential changes to the EVA 3 timeline.

Management at the MMT press conference just used the phrase, "wildly successful", to describe STS 114. Just goes to show you that there are still adjectives left to be used!

Have a great day!

<u>ISS Summary</u>

1. CMG 2 continues to perform for us. CMG 2 and CMG 4 are in the Steering Law and holding attitude nicely.

2. Thanks for your hard work getting the HRF rack installed yesterday. We were able to later confirm that the foam block precluding good ground strap installation can be removed. The ISS crew will be rotating the rack again after you leave to remove the foam and get a good ground strap installation. In the meantime, all RPCs to the rack have been close-command inhibited to keep the rack unpowered.

YOUR CURRENT ORBIT IS: 194 X 187 NM

NOTAMS:

EDWARDS (EDW) – LAKEBED RWYS ELS ONLY - UNCERTIFIED
OCEANA (NTU) – RWY 23L/05R CLOSED
HALIFAX (YHZ) – RWY 06/24 CLOSED
GUAM (GUA) – RWY 06L/24R CLOSED
RIO GALLEGOS (AWG) – NOT APPROVED
ELMENDORF (EDF) – RWY 06/24 CLOSED
TINDAL (PTN) – RWY 14/32 CLOSED / TACAN TDL 70 UNUSABLE
HONOLULU (HNL) - TACAN HNL 95 UNUSABLE

NEXT 2 PLS OPPORTUNITIES:

EDW22 ORB 95 - 5/23:23
EDW22 ORB 110 - 6/22:14

OMS TANK FAIL CAPABILITY:

L OMS FAILS: NO
R OMS FAILS: NO

LEAKING OMS PRPLT BURN:

L OMS LEAK: ALWAYS BURN RETROGRADE
R OMS LEAK: ALWAYS BURN RETROGRADE

POST-TI OMS QUANTITIES(%)

L OMS OX = 35.2 R OMS OX = 36.6
FU = 35.6 FU = 37.3

SUBTRACT I'CNCT COUNTER FOR CURRENT OMS QUANTITIES

| DELTA V AVAILABLE: | WITH MPLM | NO MPLM |
|---|---|---|
| OMS | 319 FPS | 310 FPS |
| ARCS (TOTAL ABOVE QTY1) | 29 FPS | 31 FPS |
| TOTAL IN THE AFT | 348 FPS | 341 FPS |
| ARCS (TOTAL ABOVE QTY2) | 58 FPS | 63 FPS |
| FRCS (ABOVE QTY 1) | 28 FPS | 30 FPS |
| AFT QTY 1 | 82 % | 82% |
| AFT QTY 2 | 44 % | 44% |

THERE ARE NO FAILURE/IMPACT/WORK AROUNDS FOR TODAY.

Good morning Wendy, Charlie, and crew!

Thanks for a great job with transfer yesterday! We are happy to know that "the drones are droning away". Wendy, make sure to keep them well fed for tomorrow's "transfa" day!

There are a few change pages attached to the message today. The details of the changes are below. The MPLM Return Final Location Sort List is also attached to the message. Since the middeck locations are still changing, we will uplink the Middeck Return Final Location Sort List when we have the middeck plan.

The Transfer List Excel file, LF1_TransferList_FD07.xls, is located on the KFX machine in **C:\OCA-up\transfer.**

For ISS, the Transfer List Excel file, LF1_ TransferList_FD07.xls, is located in **K:\OCA-up\transfer.**

<u>Transfer Notes</u>
Hold-off on packing Return Bags 443 and 445 into the MPLM today. We are expecting a change to each of these bags and will let you know the plan tomorrow. We will also have more words for you on the single CTB of LiOH that is temp stowed on ISS (previous deleted Item #718).

<u>Changes to the Transfer List are noted below</u>
Middeck Return List:

- Items 807 and 482.3: Added half CTB (item 807) for packing the DCS 760 cameras. The cameras were moved from the swap list to under this item in the Real-time Additions.

MPLM Return List:

- Item 518.1: Item added in Return Bag 518.
- Item 715.3: Item deleted from return. (Trunnion covers not brought inside after EVA.)

Swap List:

- Item 482.3: Item moved to Middeck Real-time Additions section.

<u>Questions</u>
Were all items completed in Return Bag 482 per the Swap List? Items 482.4 and 482b should not be stowed until FD10.

-The Transfer Team-

# STS-114 / LF1 Swap List

| Chg Flag | ☑ | FD | Crew Initials | Item # | Item Name | Qty | Initial Stowage | Temp Stowage | Stowage at Undock | Tox Level | Wt (lbs) | PROCEDURES/**Constraints/** **Comments |
|---|---|---|---|---|---|---|---|---|---|---|---|---|
| | ☑ | 6 | | 719.1 | LiOH CARTRIDGE CANISTER [S/N 336] | 1 | NOD1P4_B2 (in CTB S/N 1009) | | MPL2P3_K1 [in above CTB] | 2 | Part of above | **Swapped per item 179.1. |
| | ☑ | 6 | | 719.2 | LiOH CARTRIDGE CANISTER [S/N 334] | 1 | CM1PO_4_417_1 | | MPL2P3_K1 (in above CTB) | 2 | Part of above | **Swapped per item 179.2. |
| | ☑ | 6 | | 124 | OUTER HATCH WINDOW COVER ASSEMBLY | 1 | MPL2A4_C1 | | Node Nadir Hatch Window, EVA side | N/A | 3.00 | **Handle with care. Do not scratch or smudge window cover.**<br><br>**Additional Velcro provided with new cover in the event that ground-installed Velcro does not completely align with Velcro on Node 1. Inform ground if this Velcro was used.<br><br>**Photo new cover once installed.<br><br>**Reference item 727 for completion of swap. |
| | ☑ | 6 | | 727 | OUTER HATCH WINDOW COVER ASSEMBLY | 1 | Node Nadir Hatch Window, EVA side | | MPL2A4_C1 | N/A | 3.00 | **Handle with care. Do not scratch or smudge window cover.**<br><br>**Pack in materials used to launch new cover. |
| | ☑ | 6 | | 114 | ISS PHOTO TV RESUPPLY BAG | 1 Sngl | MPL2A2_C1 | | LAB1O5_A2 | BA 2 | 25.95 | **No items swapped in this CTB. Stow launching Photo/TV Bag in location of returning Photo/TV bag.<br><br>**Reference item 482 for completion of swap. |
| | | | | 482 | Return Bag 482 [PHOTO/TV RESUPPLY] | 1 Sngl | LAB1O5_A2 | | Ext A/L Floor | BA 2 | 46.50 | **Gather the following photo/TV hardware and stow in this bag for return (items 482.1 - 482.5, 482b).** |
| | | | | 482.1 | Camcorder Assembly [PD100] [S/N 1001, 1010, 1011, 1012] | 4 | ISS deployed | | Ext A/L Floor (inside item 482) | BA 2 | PART OF ABOVE | |
| | | | | 482.2 | Digital Cassettes | 10 | ISS deployed | | Ext A/L Floor (inside item 482) | N/A | PART OF ABOVE | |
| X | | | | 482.3 | Item moved to Middeck Return ~~DCS 760 Camera Assemblies [S/N 1040, 1013]~~ | ~~2~~ | ~~ISS deployed~~ | | ~~Ext A/L Floor (inside item 482)~~ | ~~BA 2~~ | ~~PART OF ABOVE~~ | |

[ ] - indicates note added by Transfer Team (not seen on actual label)
* in Stowage at Undock - indicates ESP-2 layer
[ ] in Stowage Locations - indicates prior stowage locations

## STS-114 / LF1 Return Transfer List

| Chg Flag | ☑ | FD | Crew Initials | Item # | Item Name | Qty | Initial Stowage | Temp Stowage | Stowage at Undock | Tox Level | Wt (lbs) | PROCEDURES/**Constraints/** **Comments |
|---|---|---|---|---|---|---|---|---|---|---|---|---|
| | | | | 706 | Item moved to MPLM | | | | | | | |
| | | | | 707 | Starboard EMU [Krikalev] [S/N 3011] | 1 | ISS A/L | | MD Ceil Stbd | BA-2 | 324.29 | Transfer on FD10 per POST EVA TRANSFER AND RECONFIG (FDF: EVA FS, Airlock Config) |
| | | | **Middeck Real-Time Additions** | | | | | | | | | |
| | | | | 800 | PCG-STES Hardware | 1 Hlf | ISS | | MF43K | N/A | 8.89 | Transfer per procedure {PCG-STES TRANSFER ISS TO MDDK} (SODF:ASSY OPS: Transfer: Powered)<br><br>Gather the following PCG-STES hardware (items 800.1-800.3) and stow in half CTB retrieved from ISS. **Report CTB B/C to MCC-H** |
| | | | | 800.1 | PCG-STES Muffler [96M12647-1] | 1 | LAB1P2_G1 | | MF43K (inside item 800) | 0 | 5.8 | Transfer per procedure {PCG-STES TRANSFER ISS TO MDDK} (SODF:ASSY OPS: Transfer: Powered) |
| | | | | 800.2 | PCG-STES Power Adapter Cable [96M20602-1] | 1 | LAB1P2_G1 | | MF43K (inside item 800) | 0 | 0.35 | Transfer per procedure {PCG-STES TRANSFER ISS TO MDDK} (SODF:ASSY OPS: Transfer: Powered) |
| | | | | 800.3 | PCG-STES RS422 Adapter Cable [96M20601-1] | 1 | LAB1P2_G1 | | MF43K (inside item 800) | 0 | 0.24 | Transfer per procedure {PCG-STES TRANSFER ISS TO MDDK} (SODF:ASSY OPS: Transfer: Powered) |
| X | | | | 807 | DCS 760 Camera Bag | 1 Hlf | Aft ZSR | | TBD | | | **Report barcode or S/N of the half CTB used. |
| X | | | | 482.3 | DCS 760 Camera Assemblies [S/N 1040, 1013] | 2 | ISS deployed | | TBD (inside item 807) | BA 2 | | **Camera moved to this bag from item #482. |

[ ] - indicates note added by Transfer Team (not seen on actual label)
* in Stowage at Undock - indicates items that do not return if ESP-2 not installed on ISS
[ ] in Stowage Locations - indicates prior stowage locations

# STS-114 / LF1 Return Transfer List

| Chg Flag | ☑ | FD | Crew Initials | Item # | Item Name | Qty | Initial Stowage | Temp Stowage | Stowage at Undock | Tox Level | Wt (lbs) | PROCEDURES/**Constraints/** **Comments |
|---|---|---|---|---|---|---|---|---|---|---|---|---|
| | | | | 515 | Return Bag 515 [L&M TOOLS] | 1 Hlf | NOD1D4 (Rack Front) | | MPL2S4_K2 | N/A | 20.00 | **See following line items for ops. |
| | | | | 515.1 | HRM Ziplock | 1 | See Swap List | | MPL2S4_K2 (inside item 515) | N/A | part of above | **Ziplock packed per swap tab. |
| | | | | 515.2 | Scopemeter Pressure Probe Kit [S/N 1002] | 1 | NOD1O3 (in CTB S/N 1202) | | MPL2S4_K2 (inside item 515) | N/A | part of above | **Pack Scopemeter Pressure Probe (Cal # M206129) and kit (S/N 1002) after FD04 ops complete.**<br><br>**Verify a Female QD is not stowed in Kit. If Female QD found, stow in Strange Tool Bag (located in NOD1O4_E1 with B/C 006653J) and inform MCC-H. |
| | | | | 516 | Return Bag 516 [CHeCS Return #3] | 1 Sngl | LAB1P4 (Rack Front) (Returning ZSR) | | MPL2F1_A1 | 0 | 22.90 | |
| | | | | 518 | Return Bag 518 [RS Return Bag 1] | 1 Sngl | FGB Wall | | MPL2F1_H1 | 0 | 37.90 | |
| X | | | | 518.1 | B1 Fan Unit | 1 | SM_235 | | MPL2F1_H1 | | 3.75 | **Stowed item inside bag 518 for return per ISS crew calldown |
| | | | | 519 | Return Item 519 [Lada Root Module] | 1 | FGB | | MPL2A1_A1 | 0 | 15.50 | |
| | | | | 520 | Return Item 520 [Lada Root Module] | 1 | FGB | | MPL2A1_A1 | 0 | 15.50 | |
| | | | | 521 | Return Bag 521 [Phillips Shuttle Return Items] | 1 Hlf | LAB1P4_F2 | | MPL2P3_B1 | N/A | 11.00 | |
| | | | | 522 | Return Bag 522 [EVA tether Return Bag] | 1 Hlf | LAB1P4 (Rack Front) | | MPL2P3_B2 | N/A | | |
| | | | **Non- Prepacked Bags/Items** | | | | | | | | | |
| | | | | 708 | 11/16" Box End Wrench Assy | 1 | | STS A/L | MPL2S3_G2* | N/A | 2.00 | **Comes in STS A/L after EVA 2. |
| | | | | 709 | APFR Ingress Aid Assy | 1 | | STS A/L | MPL2S3_G2* | N/A | 7.35 | **Comes in STS A/L after EVA 2. |
| | | | | 710 | Apollo Bags - 108 | 1 Zplk | MPL2S4_A1 | | MPL2S4_A1 | N/A | 15.20 | **Ziplock was launched in this location. Do NOT transfer unless CSCS. |

[ ] - indicates note added by Transfer Team (not seen on actual label)
* in Stowage at Undock - indicates items that do not return if ESP-2 not installed on ISS
[ ] in Stowage Locations - indicates prior stowage locations

## STS-114 / LF1 Return Transfer List

| Chg Flag | ☑ | FD | Crew Initials | Item # | Item Name | Qty | Initial Stowage | Temp Stowage | Stowage at Undock | Tox Level | Wt (lbs) | PROCEDURES/**Constraints/** **Comments |
|---|---|---|---|---|---|---|---|---|---|---|---|---|
| | | | | 711 | Bowersox RTH #2<br>[S/N 1286] | 1 Sngl | LAB1P4_Aft<br>(Returning ZSR) | | MPL2P2_D2 | N/A | 30.00 | |
| | | | | 712 | BU #1<br>[Budarin Crew Pref]<br>[S/N 1123] | 1 Sngl | LAB1P4_Aft<br>(Returning ZSR) | | MPL2F4_H1 | N/A | 30.00 | |
| | | | | 713 | Bu-2<br>[Budarin Crew Pref]<br>[S/N 1049] | 1 Hlf | LAB1P4_Aft<br>(Returning ZSR) | | MPL2A1_K1 | N/A | 20.00 | |
| | | | | 714 | Empty Half CTBs | 1 Hlf | LAB1P4_Aft<br>(Returning ZSR) | | MPL2F1_K1 | N/A | 6.60 | **Retrieve three empty half CTBs from LAB1P4 aft (Returning ZSR). Pack two empty half CTBs into the third CTB for return. |
| X | | | | 715 | Excess Integration | 1 Sngl | ISS Staged | | MPL2S4_G2* | N/A | 39.2<br>~~40.0~~ | **Pack following line items before stowing.<br><br>**Retrieve single CTB from ISS. **Report CTB B/C to MCC-H** |
| | | | | 715.1 | ESP-2 Dust Covers | 7 | Brought in from EVA | | MPL2S4_G2* (inside item 715) | N/A | Part of Above | **Comes in after EVA 1 and 3. |
| | | | | 715.2 | CMG Dust Covers | 4 | Brought in from EVA | | MPL2S4_G2* (inside item 715) | N/A | Part of Above | **Comes in after EVA 2. |
| X | | | | 715.3 | Item Deleted<br>~~Trunnion Covers~~ | ~~2~~ | ~~Brought in from EVA~~ | | ~~MPL2S4_G2* (inside item 715)~~ | ~~N/A~~ | ~~Part of Above~~ | ~~**Comes in after EVA 1.~~ |
| | | | | 715.4 | CMG/Z1 Shims | 4 | Brought in from EVA | | MPL2S4_G2* (inside item 715) | N/A | Part of Above | **Comes in after EVA 2. |
| | | | | 715.5 | CMG/FSE Shims | 4 | Brought in from EVA | | MPL2S4_G2* (inside item 715) | N/A | 0.28 | **Comes in after EVA 2. |
| | | | | 716 | GPS Antenna | 1 Sngl | Brought in from EVA | | MPL2F3_H1 | N/A | 23.00 | **Comes in STS A/L after EVA 1.<br><br>**Pack returning GPS Antenna in single CTB used for launched antenna.<br><br>**Reference item 118 for resupply item. |

[ ] - indicates note added by Transfer Team (not seen on actual label)
* in Stowage at Undock - indicates items that do not return if ESP-2 not installed on ISS
[ ] in Stowage Locations - indicates prior stowage locations

| Chg Flag | ☑ | FD | Crew Initials | Item # | Item Name | Qty | Initial Stowage | Temp Stowage | Stowage at Undock | Tox Level | Wt (lbs) | PROCEDURES/**Constraints/** **Comments |
|---|---|---|---|---|---|---|---|---|---|---|---|---|
| **A1 Rack** | | | | | | | | | | | | |
| | | | | 415 | Return Bag 415<br>[ISSI & PUFF] | 1 Sngl | LAB1P4_E2/F2<br>(Returning ZSR) | | MPL2A1_A1 | BA-2 | 39.07 | |
| | | | | 519 | Return Item 519<br>[Lada Root Module] | 1 | FGB | | MPL2A1_A1 | | 15.5 | |
| | | | | 520 | Return Item 520<br>[Lada Root Module] | 1 | FGB | | MPL2A1_A1 | | 15.5 | |
| | | | | 428 | Return Item 428<br>[KURS Electronics Unit] | 1 | FGB Deck | | MPL2A1_C1 | N/A | 149.36 | **KURS not packed in triple.<br><br>**Ensure ovals "eyes" are facing you when packing into the M-bag. |
| | | | | 505 | Return Bag 505<br>[PGT/Hydrazine] | 1 Sngl | LAB1P4<br>(Rack Front) | | MPL2A1_C1 | BA-2 | 24 | **Remove foam from RSP as required to stow CTB. Stow removed foam in any RSR location for return. |
| | | | | 433 | Return Item 433<br>[TOCA Supply Kit] | 1 | LAB1O4_A1 | | MPL2A1_H1 | 1 | 22 | |
| | | | | 455 | Return Item 455<br>[Food Containers] | 17 | NOD1D4_K2 | | MPL2A1_H1 | N/A | 37.4 | |
| | | | | 475 | Return Item 475<br>[Acoustic Countermeasures Kit (ACK)] | 1 Hlf | LAB1P4_F1<br>(Returning ZSR) | | MPL2A1_H1 | N/A | 11.62 | |
| | | | | 400 | Return Bag 400<br>[KURS Electronics Unit] | 1 Trpl | FGB Deck | | MPL2A1_K1 | N/A | 155.56 | **Ensure ovals "eyes" are facing you when packing into the M-bag. |
| | | | | 713 | Bu-2<br>[Budarin Crew Pref]<br>[S/N 1049] | 1 Hlf | LAB1P4_Aft<br>(Returning ZSR) | | MPL2A1_K1 | N/A | 20 | |

| Chg Flag | ☑ | FD | Crew Initials | Item # | Item Name | Qty | Initial Stowage | Temp Stowage | Stowage at Undock | Tox Level | Wt (lbs) | PROCEDURES/**Constraints/** **Comments |
|---|---|---|---|---|---|---|---|---|---|---|---|---|
| **A2 Rack** | | | | | | | | | | | | |
| | | | | 440 | Return Bag 440<br>[IRED Canister - Aft] | 1 Dbl | NOD1P1 | | MPL2A2_A1 | N/A | 52.5 | |
| | | | | 429 | Return Item 429<br>[KURS Electronics Unit] | 1 | FGB Deck | | MPL2A2_C1 | N/A | 149.36 | **KURS not packed in triple.<br><br>**Ensure ovals "eyes" are facing you when packing into the M-bag. |
| | | | | 401 | Return Bag 401<br>[KURS Electronics Unit] | 1 Trpl | FGB Deck | | MPL2A2_H1 | N/A | 155.56 | **Ensure ovals "eyes" are facing you when packing into the M-bag. |
| | | | | 418 | Return Bag 418<br>[HRF Media Kit/PGBA Stow] | 1 Sngl | LAB1P4_E2/ F2<br>(Returning ZSR) | | MPL2A2_K1 | 1 | 41.01 | |
| | | | | 458 | Return Bag 458<br>[Chiao Crew Pref] | 1 Sngl | LAB1P4_A2/D2<br>(Returning ZSR) | | MPL2A2_K1 | N/A | 20 | |
| | | | | 459 | Return Bag 459<br>[Chiao Crew Pref] | 1 Sngl | LAB1P4_A2/D2<br>(Returning ZSR) | | MPL2A2_K1 | N/A | 20 | |
| | | | | 460 | Return Bag 460<br>[Sharipov Crew Pref] | 1 Sngl | LAB1P4_A2/D2<br>(Returning ZSR) | | MPL2A2_K1 | N/A | 20 | |
| | | | | 461 | Return Bag 461<br>[Sharipov Crew Pref] | 1 Sngl | LAB1P4_A2/D2<br>(Returning ZSR) | | MPL2A2_K1 | N/A | 20 | |

| Chg Flag | ☑ | FD | Crew Initials | Item # | Item Name | Qty | Initial Stowage | Temp Stowage | Stowage at Undock | Tox Level | Wt (lbs) | PROCEDURES/**Constraints/** **Comments |
|---|---|---|---|---|---|---|---|---|---|---|---|---|
| **A3 Rack** | | | | | | | | | | | | |
| | | | | 470 | Return Item 470<br>[Arctic Freezer] | 1 | LAB1P2_D2 | | MPL2A3_A1 | | 61.63 | **Recommend ISS crewmember perform this activity.<br><br>**Remove [4] locker fasteners using:<br>1) High Torque Locker Tool (LAB1O1_M1)<br>2) 1/4" Socket, 1/4" Drive<br>(ISS Tool Box Drawer 2)<br>3) 1/4" Ratchet Wrench<br>(ISS Tool Box Drawer 2)<br><br>Install Vent Closeout Panel [2], P/N 683-46111-1 (LAB1O1_M1), onto the EXPRESS Rack after ARCTIC is removed. |
| | | | | 430 | Return Item 430<br>[KURS Electronics Unit] | 1 | FGB Deck | | MPL2A3_C1 | N/A | 149.36 | **KURS not packed in triple.<br><br>**Ensure ovals "eyes" are facing you when packing into the M-bag. |
| | | | | 402 | Return Bag 402<br>[KURS Electronics Unit] | 1 Trpl | FGB Deck | | MPL2A3_H1 | N/A | 155.56 | **Ensure ovals "eyes" are facing you when packing into the M-bag. |
| | | | | 804 | Return Item 804<br>KURS Electronics Unit | 1 | FGB Deck | | MPL2A3_K1 | N/A | 149.91 | **S/N of returning KURS to be provided by MCC-M.<br><br>**Use triple CTB launched in MPLM for packing KURS. Reference item #163. |

| Chg Flag | ☑ | FD | Crew Initials | Item # | Item Name | Qty | Initial Stowage | Temp Stowage | Stowage at Undock | Tox Level | Wt (lbs) | PROCEDURES/**Constraints/** **Comments |
|---|---|---|---|---|---|---|---|---|---|---|---|---|
| **A4 Rack** | | | | | | | | | | | | |
| | | | | 446 | Return Bag 446<br>[Pump Package Assembly] | 1 | LAB1D1<br>(Behind Rack) | | MPL2A4_C1 | | 190.6 | |
| | | | | 727 | OUTER HATCH WINDOW COVER ASSEMBLY | 1 | See Swap List | | MPL2A4_C1 | N/A | 3 | **Reference Swap List for instructions. |
| | | | | 405 | Return Bag 405<br>[KURS Electronics Unit] | 1 SH Gold Bag | FGB Deck | | MPL2A4_H1 | N/A | 152.86 | **Ensure ovals "eyes" are facing you when packing into the M-bag. |
| | | | | 404 | Return Bag 404<br>[KURS Electronics Unit] | 1 Trpl | FGB Deck | | MPL2A4_K1 | N/A | 155.56 | **Ensure ovals "eyes" are facing you when packing into the M-bag. |

| Chg Flag | ☑ | FD | Crew Initials | Item # | Item Name | Qty | Initial Stowage | Temp Stowage | Stowage at Undock | Tox Level | Wt (lbs) | PROCEDURES/**Constraints/** **Comments |
|---|---|---|---|---|---|---|---|---|---|---|---|---|
| **F1 Rack** | | | | | | | | | | | | |
| | | | | 516 | Return Bag 516<br>[CHeCS Return #3] | 1 Sngl | LAB1P4<br>(Rack Front)<br>(Returning ZSR) | | MPL2F1_A1 | | 22.9 | |
| | | | | 720 | LiOH (2)<br>[STS-111 65 and STS-111 59] | 1 Sngl | NOD1D4_D2 | | MPL2F1_A1 | 2 | 22.63 | **For Wendy and Charlie only.<br><br>Reference LIOH CUE CARD<br><br>**Expired and used canisters.<br><br>**Retrieve single CTB (or two half CTBs) from ISS. Report CTB B/C to MCC-H |
| | | | | 725 | MISSE PEC #1 with Wrapper | 1 | Brought in from EVA | | MPL2F1_C1 | | 75.62 | Transfer after EVA 3.<br><br>Place MISSE PEC #1 into one inner bag for return.<br><br>Clamps do NOT return on LF1. Remove pip pin to release clamp. Stow clamps with the two collars brought up on LF1 in half CTB stowed in NOD1O4_E2 (reference item 38 and 39). |
| | | | | 726 | MISSE PEC #2 with Wrapper | 1 | Brought in from EVA | | MPL2F1_C1 | | 62.39 | Transfer after EVA 3.<br><br>Place MISSE PEC #2 into one inner bag for return.<br><br>Clamps do NOT return on LF1. Remove pip pin to release clamp. Stow clamps with the two collars brought up on LF1 in half CTB stowed in NOD1O4_E2 (reference item 38 and 39). |
| | | | | 406 | Return Bag 406<br>[KURS Amps #1] | 1 Sngl | FGB Deck | | MPL2F1_H1 | N/A | 64.19 | |
| | | | | 436 | Return Bag 436<br>[PUFF Disp. Mouthpiece Kits/HRF Personal Kits] | 1 Sngl | LAB1O1_J2 | | MPL2F1_H1 | BA-2 | 17.5 | |
| | | | | 513 | Return Item 513<br>[INTERFACE UMBILICAL ASSEMBLY] | 1 | LAB1P1_D | | MPL2F1_H1 | N/A | 26 | |
| | | | | 518 | Return Bag 518<br>[RS Return Bag 1] | 1 Sngl | FGB Wall | | MPL2F1_H1 | | 37.9 | |
| X | | | | 518.1 | B1 Fan Unit | 1 | SM_235 | | MPL2F1_H1 | | 3.75 | **Stowed item inside bag 518 for return per ISS crew calldown |

| Chg Flag | ☑ | FD | Crew Initials | Item # | Item Name | Qty | Initial Stowage | Temp Stowage | Stowage at Undock | Tox Level | Wt (lbs) | PROCEDURES/**Constraints/** **Comments |
|---|---|---|---|---|---|---|---|---|---|---|---|---|
| | | | | 501 | Return Bag 501<br>[KURS Electronics Unit] | 1 Trpl | FGB Deck | | MPL2F1_K1 | N/A | 155.56 | **Ensure ovals "eyes" are facing you when packing into the M-bag. |
| | | | | 714 | Empty Half CTBs | 1 Hlf | LAB1P4_Aft<br>(Returning ZSR) | | MPL2F1_K1 | N/A | 6.6 | **Retrieve three empty half CTBs from LAB1P4 aft (Returning ZSR). Pack two empty half CTBs into the third CTB for return. |

| Chg Flag | ☑ | FD | Crew Initials | Item # | Item Name | Qty | Initial Stowage | Temp Stowage | Stowage at Undock | Tox Level | Wt (lbs) | PROCEDURES/**Constraints/** **Comments |
|---|---|---|---|---|---|---|---|---|---|---|---|---|
| **F3 Rack** | | | | | | | | | | | | |
| | | | | 432 | Return Item 432<br>[High Accuracy Rate Sensor (GIVUS)] | 1 | FGB 221_1<br>(behind FGB panel) | | MPL2F3_A1 | N/A | 52.9 | |
| | | | | 447 | Return Bag 447<br>[RS Data Bank] | 1 Sngl | FGB Deck | | MPL2F3_A1 | N/A | 36.41 | |
| | | | | 416 | Return Bag 416<br>[HRF PUFF Experiment Supplies] | 1 Sngl | LAB1P4_C1<br>(Returning ZSR) | | MPL2F3_C1 | | 21.27 | |
| | | | | 431 | Return Item 431<br>[KURS Electronics Unit] | 1 | FGB Deck | | MPL2F3_C1 | N/A | 149.36 | **KURS not packed in triple.<br><br>**Ensure ovals "eyes" are facing you when packing into the M-bag. |
| | | | | 442 | Return Item 442<br>[HEPA filter] | 1 | LAB1P1_C1 | | MPL2F3_C1 | N/A | 4.47 | **Pack in filter foam that launched in this location.<br><br>**Reference item 133 for launched filters. |
| | | | | 488 | Return Item 488<br>[LHA] | 1 | LAB1P4_G<br>(Returning ZSR) | | MPL2F3_C1 | | 2.76 | **Pack in HEPA filter foam that launched in this location. |
| | | | | 489 | Return Item 489<br>[LHA] | 1 | LAB1P4_G<br>(Returning ZSR) | | MPL2F3_C1 | | 2.76 | **Pack in HEPA filter foam that launched in this location. |
| | | | | 490 | Return Item 490<br>[LHA] | 1 | LAB1P4_G<br>(Returning ZSR) | | MPL2F3_C1 | | 2.76 | **Pack in HEPA filter foam that launched in this location. |
| | | | | 437 | Return Bag 437<br>[TOCA] | 1 Foam Box | LAB1O4_A1 | | MPL2F3_H1 | BA-2 | 55.23 | |
| | | | | 716 | GPS Antenna | 1 Sngl | Brought in from EVA | | MPL2F3_H1 | N/A | 23 | **Comes in STS A/L after EVA 1.<br><br>**Pack returning GPS Antenna in single CTB used for launched antenna.<br><br>**Reference item 118 for resupply item. |
| | | | | 497 | Return Bag 497<br>[KURS Electronics Unit] | 1 Trpl | FGB Deck | | MPL2F3_K1 | N/A | 155.56 | **Ensure ovals "eyes" are facing you when packing into the M-bag. |

| Chg Flag | ☑ | FD | Crew Initials | Item # | Item Name | Qty | Initial Stowage | Temp Stowage | Stowage at Undock | Tox Level | Wt (lbs) | PROCEDURES/**Constraints/** **Comments |
|---|---|---|---|---|---|---|---|---|---|---|---|---|
| **F4 Rack** | | | | | | | | | | | | |
| | | | | 453 | Return Item 453<br>[Elektron Liquid Unit] | 1 | NOD1P4 | | MPL2F4_A1 | BA-2 | 330 | To stow Elektron in M-bag, remove middle back piece of foam and one portion of front foam and stow in any RSR location for return.<br><br>Ensure all straps & zippers on M-bag are fully secure for return. |
| | | | | 443 | Return Bag 443<br>[EMU Gloves-5pr] | 1 Sngl | LAB1D5 | | MPL2F4_H1 | N/A | 47.25 | |
| | | | | 493 | Return Bag 493<br>[CHeCS Return #2] | 1 Sngl | LAB1P1_C1 | | MPL2F4_H1 | 1 | 33.2 | |
| | | | | 712 | BU #1<br>[Budarin Crew Pref]<br>[S/N 1123] | 1 Sngl | LAB1P4_Aft<br>(Returning ZSR) | | MPL2F4_H1 | N/A | 30 | |
| | | | | 728 | Pettit Return #1<br>[S/N 1189] | 1 Sngl | LAB1P4_Aft<br>(Returning ZSR) | | MPL2F4_H1 | N/A | 20 | |

| Chg Flag | ☑ | FD | Crew Initials | Item # | Item Name | Qty | Initial Stowage | Temp Stowage | Stowage at Undock | Tox Level | Wt (lbs) | PROCEDURES/**Constraints/** **Comments |
|---|---|---|---|---|---|---|---|---|---|---|---|---|
| **P2 Rack** | | | | | | | | | | | | |
| | | | | 724 | Mineral Syringe Kit<br>[S/N 1001] | 1 Zplk | [MPL2S3_A1] | Middeck | MPL2P2_A1 | | 4.14 | **Mineralization kit used on Middeck. Stow after ops complete on FD09.<br><br>**Reference item 154 for resupply item. |
| | | | | 732 | Silver Biocide Syringe Kit<br>[S/N 1003] | 1 Zplk | [MF43C] | Middeck | MPL2P2_A1 | | 1.34 | **Silver Biocide Syringe Kit used on Middeck. Stow after ops complete. Kit will be empty for return.<br><br>**Reference item 28 for resupply item. |
| | | | | 483 | Return Item 483<br>[BP/ECG] | 1 | See Swap List | | MPL2P2_B1 | | 26.5 | **Reference Swap List for instructions. |
| | | | | 434 | Return Bag 434<br>[MCA Mass Spectrometer] | 1 Sngl | LAB1P4_D1<br>(Returning ZSR) | | MPL2P2_B2 | | 53.2 | |
| | | | | 468 | Return Item 468<br>[HRF LEMS Kit #2] | 1 | LAB1O1_G2 | | MPL2P2_D1* | | 14.55 | |
| | | | | 469 | Return Bag 469<br>[Water Bags] | 1 Sngl | LAB1P1_D | | MPL2P2_D1* | BA-2 | 22.32 | |
| | | | | 480 | Return Bag 480<br>[Water Bags] | 1 Sngl | LAB1P4_A1/B1<br>(Rack Front)<br>(Returning ZSR) | | MPL2P2_D1* | | 13.6 | **See following line item for ops. |
| | | | | 480b | PWR<br>[S/N 1008] | 1 | LAB1P4<br>(inside item 480) | | MPL2P2_D1*<br>(inside item 480) | | part of above | PWR is vented per the Flight Plan. Ensure PWR is empty before stowing. |
| | | | | 407 | Return Bag 407<br>[KURS Amps #2] | 1 Sngl | FGB Deck | | MPL2P2_D2 | N/A | 58.61 | |
| | | | | 421 | Return Bag 421<br>[Foale Crew Preference Clothing] | 1 Hlf | LAB1O4_C2 | | MPL2P2_D2 | N/A | 20 | |
| | | | | 711 | Bowersox RTH #2<br>[S/N 1286] | 1 Sngl | LAB1P4_Aft<br>(Returning ZSR) | | MPL2P2_D2 | N/A | 30 | |
| | | | | 721 | LiOH (6) | 1 Trpl | | Middeck<br>(LiOH Box) | MPL2P2_G1 | 2 | 65 | **For Wendy and Charlie only.<br><br>Reference LIOH CUE CARD.<br><br>**Use triple CTB launched in MPLM for packing LiOH. Reference item 132. |
| | | | | 422 | Return Bag 422<br>[Foale Shuttle Return Items] | 1 Hlf | LAB1O4_C1 | | MPL2P2_G2* | N/A | 20 | |
| | | | | 425 | Return Bag 425<br>[Fincke Crew Preference Clothing] | 1 Sngl | LAB1O5_B1 | | MPL2P2_G2* | N/A | 20 | |
| | | | | 504 | Return Bag 504<br>[EVA Return Bag] | 1 Sngl | LAB1P4<br>(Rack Front)<br>(Returning ZSR) | | MPL2P2_G2* | | 30 | |

| Chg Flag | ☑ | FD | Crew Initials | Item # | Item Name | Qty | Initial Stowage | Temp Stowage | Stowage at Undock | Tox Level | Wt (lbs) | PROCEDURES/**Constraints/** **Comments |
|---|---|---|---|---|---|---|---|---|---|---|---|---|
| | | | | 499 | Return Bag 499 [IRED Can Fore] | 1 Dbl | NOD1P1 | | MPL2P2_K1 | N/A | 52.5 | |
| | | | | 441 | Return Bag 441 [IRED Canister - Fore] | 1 Dbl | NOD1P1 | | MPL2P2_K2 | N/A | 52.5 | |
| | | | | 445 | Return Bag 445 [EMU Gloves] | 1 Sngl | LAB1D5 | | MPL2P2_K2 | N/A | 37.6 | |

| Chg Flag | ☑ | FD | Crew Initials | Item # | Item Name | Qty | Initial Stowage | Temp Stowage | Stowage at Undock | Tox Level | Wt (lbs) | PROCEDURES/**Constraints/** **Comments |
|---|---|---|---|---|---|---|---|---|---|---|---|---|
| **P3 Rack** | | | | | | | | | | | | |
| | | | | 734 | Zero G Stowage Rack [ZSR] | 1 | [LAB1P4] | MPLM empty bay | MPL2P3* (Attached on front of RSR) | N/A | 69.51 | Do not mount ZSR for return until all prepack return items and CTBs have been removed from ZSR and all returning items in MPL2P3 rack have been stowed.<br><br>Mount ZSR on front of RSR per procedure: {1.105 LAB ZERO G STOWAGE RACK (ZSR) RETURN} (SODF: CSS: Crew Support Equipment)<br><br>**Reference item 148 for ZSR/RSR Brackets. |
| | | | | 477 | Return Bag 477 [HRF Renal/Urine Collection Kit] | 1 Sngl | LAB1P4_B1 (Returning ZSR) | | MPL2P3_B1 | 1 | 47.78 | |
| | | | | 521 | Return Bag 521 [Phillips Shuttle Return Items] | 1 Hlf | LAB1P4_F2 | | MPL2P3_B1 | N/A | 11 | |
| | | | | 474 | Return Bag 474 [Return to Houston] | 1 Sngl | LAB1P4_A1 (Returning ZSR) | | MPL2P3_B2 | BA-2 | 28.76 | |
| | | | | 522 | Return Bag 522 [EVA tether Return Bag] | 1 Hlf | LAB1P4 (Rack Front) | | MPL2P3_B2 | N/A | | |
| | | | | 464 | Return Bag 464 [Malenchenko Return #1] | 1 Sngl | LAB1D5 | | MPL2P3_D1* | N/A | 20 | |
| | | | | 717 | LiOH (1) | 1 Hlf | | Middeck (LiOH Box) | MPL2P3_D1* | 2 | 11.5 | **For Wendy and Charlie only.<br><br>Reference LIOH CUE CARD |
| | | | | 414 | Return Bag 414 [EV ARM] | 1 Hlf | LAB1P4 (Rack Front) (Returning ZSR) | | MPL2P3_D2 | 4 | 14.1 | |
| | | | | 457 | Return Item 457 [Water Sampler and Archiver] | 1 | NOD1O1 | | MPL2P3_D2 | | 33 | |
| | | | | 476 | Return Item 476 [HRF LEMS Kit #1] | 1 | LAB1O3_D1 | | MPL2P3_D2 | N/A | 13.18 | |
| | | | | 427 | Return Bag 427 [Padalka Crew Preference Clothing] | 1 Sngl | NOD1S4_D2 | | MPL2P3_G1 | N/A | 20 | |
| | | | | 481 | Return Bag 481 [CHeCS Return #1] | 1 Sngl | LAB1P4_E1/F1 (Rack Front) (Returning ZSR) | | MPL2P3_G1 | BA-2 | 28.13 | |
| | | | | 481f | CD CARRYING CASE | 1 | SM 2_229 | | MPL2P3_G1 (inside item 481) | | part of above | |
| | | | | 424 | Return Bag 424 [Fincke Crew Preference] | 1 Sngl | LAB1O4_D | | MPL2P3_G2* | N/A | 20 | |
| | | | | 454 | Return Item 454 [FOOD CONTAINERS] | 20 | NOD1S4_D1/E1 | | MPL2P3_G2* | N/A | 44 | |

| Chg Flag | ☑ | FD | Crew Initials | Item # | Item Name | Qty | Initial Stowage | Temp Stowage | Stowage at Undock | Tox Level | Wt (lbs) | PROCEDURES/**Constraints/** **Comments |
|---|---|---|---|---|---|---|---|---|---|---|---|---|
| | | | | 479 | Return Bag 479<br>[RTH 1 (Return to Houston)] | 1 Hlf | LAB1P4_B1<br>(Returning ZSR) | | MPL2P3_K1 | BA-2 | 30 | |
| | | | | 719 | LiOH (2)<br>[S/N 336 and 334] | 1 Sngl | See Swap List | | MPL2P3_K1 | 2 | 22.63 | **Reference Swap List for instructions. |
| | | | | 733 | Sox #1<br>[S/N 1001] | 1 Sngl | LAB1P4_Aft<br>(Returning ZSR) | | MPL2P3_K1 | N/A | 20 | |
| | | | | 722 | LiOH (6) | 1 Trpl | | Middeck<br>(LiOH Box) | MPL2P3_K2 | 2 | 65 | **For Wendy and Charlie only.<br><br>Reference LIOH CUE CARD<br><br>**Use triple CTB launched in MPLM for packing LiOH. Reference item 132. |

| Chg Flag | ☑ | FD | Crew Initials | Item # | Item Name | Qty | Initial Stowage | Temp Stowage | Stowage at Undock | Tox Level | Wt (lbs) | PROCEDURES/**Constraints/** **Comments |
|---|---|---|---|---|---|---|---|---|---|---|---|---|
| **S3 Rack** | | | | | | | | | | | | |
| | | | | 729 | Pettit Return #2<br>[S/N 1050] | 1 Sngl | LAB1P4_Aft<br>(Returning ZSR) | | MPL2S3_B1 | N/A | 30 | |
| | | | | 423 | Return Bag 423<br>[Kaleri Shuttle Return Items] | 1 Hlf | LAB1P4_E1<br>(Returning ZSR) | | MPL2S3_B2 | N/A | 20 | |
| | | | | 478 | Return Item 478<br>[BCSS Cryodewar and Caddy] | 2 | LAB1O2_D1 | | MPL2S3_B2 | BA-2 | 31.74 | **Retrieve both the BCSS Cryodewar and BCSS Cryodewar/Fixative Caddy from this location. |
| | | | | 456 | Return Item 456<br>[Food Containers] | 20 | NOD1D4_K2 | | MPL2S3_D1* | N/A | 44 | |
| | | | | 463 | Return Item 463<br>[Lu Return #2] | 1 Sngl | LAB1D5 | | MPL2S3_D1* | N/A | 20 | |
| | | | | 471 | Return Bag 471<br>[Autoclave Units] | 1 Hlf | NOD1O1 | | MPL2S3_D2 | BA-2 | 58.27 | |
| | | | | 507 | Return Item 507<br>[11A EVA Return] | 1 Sngl | LAB1P4<br>(Rack Front)<br>(Returning ZSR) | | MPL2S3_D2 | N/A | 22.32 | |
| | | | | 801 | EVA Large Trash Bag<br>[S/N 1002] | 1 | Tool Pregather CTB | | MPL2S3_D2 | TBD | 3.6 | |
| | | | | 730 | SAFER<br>[S/N 1006] | 1 | ISS A/L<br>(in SAFER Stowage Bag) | | MPL2S3_G1 | 1 | 72.1 | Remove SAFER from Stowage Bag and then transfer. Stowage Bag remains in ISS A/L.<br><br>Stow switchguard on Hand Controller. Stow Hand Controller deployed, inhibitor installed.<br><br>Remove and trash old SAFER Checkout Results Cue Card. |
| | | | | 411 | Return Bag 411<br>[RPCM] | 1 Hlf | LAB1P4_D1<br>(Returning ZSR) | | MPL2S3_G2* | N/A | 30.22 | |
| | | | | 420 | Return Bag 420<br>[ZCG/InSpace Payload Hardware] | 1 Sngl | LAB1O3_B2 | | MPL2S3_G2* | BA-2 | 25.15 | |
| | | | | 708 | 11/16" Box End Wrench Assy | 1 | | STS A/L | MPL2S3_G2* | N/A | 2 | **Comes in STS A/L after EVA 2. |
| | | | | 709 | APFR Ingress Aid Assy | 1 | | STS A/L | MPL2S3_G2* | N/A | 7.35 | **Comes in STS A/L after EVA 2. |

| Chg Flag | ☑ | FD | Crew Initials | Item # | Item Name | Qty | Initial Stowage | Temp Stowage | Stowage at Undock | Tox Level | Wt (lbs) | PROCEDURES/**Constraints/** **Comments |
|---|---|---|---|---|---|---|---|---|---|---|---|---|
| | | | | 706 | SAFER<br>[S/N 1003] | 1 | ISS A/L<br>(in SAFER Stowage Bag) | | MPL2S3_K1 | 1 | 72.1 | Remove SAFER from Stowage Bag and then transfer.<br><br>Stow switchguard from launched SAFER on this returning SAFER Hand Controller. Stow Hand Controller deployed, inhibitor installed.<br><br>Remove and trash old 'SAFER Checkout Results Cue Card'.<br><br>**Ref Safer Drawing in MSG 051 for correct orientation. Cut side piece of SAFER foam to fit in RSR.<br><br>**Item moved from Middeck Return to MPLM Return. |
| | | | | 496 | Return Bag 496<br>[БСММ Array Matching Device Unit] | 1 Hlf | FGB Wall | | MPL2S3_K2 | N/A | 11.7 | |
| | | | | 498 | Return Bag 498<br>[IRED Can Aft] | 1 Dbl | NOD1D4_G1 | | MPL2S3_K2 | N/A | 52.5 | |

| Chg Flag | ☑ | FD | Crew Initials | Item # | Item Name | Qty | Initial Stowage | Temp Stowage | Stowage at Undock | Tox Level | Wt (lbs) | PROCEDURES/**Constraints/** **Comments |
|---|---|---|---|---|---|---|---|---|---|---|---|---|
| **S4 Rack** | | | | | | | | | | | | |
| | | | | 710 | Apollo Bags - 108 | 1 Zplk | MPL2S4_A1 | | MPL2S4_A1 | N/A | 15.2 | **Ziplock was launched in this location. Do NOT transfer unless CSCS. |
| | | | | 426 | Return Bag 426<br>[Padalka Crew Pref] | 1 Sngl | NOD1S4_E2 | | MPL2S4_B1 | N/A | 20 | |
| | | | | 467 | Return Item 467<br>[VOA OMI Kit] | 1 | LAB1O5_F1 | | MPL2S4_B1 | BA-2 | 23.5 | |
| | | | | 473 | Return Bag 473<br>[Return To Houston] | 1 Hlf | LAB1P4_A1<br>(Returning ZSR) | | MPL2S4_B2 | N/A | 18.81 | |
| | | | | 485 | Return Bag 485<br>[Subsa Hardware] | 1 Sngl | LAB1S4_D2 | | MPL2S4_B2 | | 29.45 | |
| | | | | 462 | Return Item 462<br>[Lu Return #1] | 1 Sngl | LAB1D5 | | MPL2S4_D1* | N/A | 20 | |
| | | | | 731 | Safety Tethers [8]<br>[S/N 1001, 1002, 1003, 1004, 1005, 1014, 1010, 1012] | 1 Hlf | Brought in from EVA | | MPL2S4_D1* | N/A | 35.7 | Transfer after EVA 3. |
| | | | | 805 | Respiratory Support Pack (RSP)<br>[S/N 1004] | 1 | LAB1D4_D1 | | MPL2S4_D1* | TBD | 9.8 | Do not stow unil RSP ops complete per timeline. |
| | | | | 438 | Return Bag 438<br>[TVIS Hardware Bag #3] | 1 Sngl | LAB1P4_A2/B2<br>(Rack Front)<br>(Returning ZSR) | | MPL2S4_D2 | | 44.71 | |
| | | | | 439 | Return Item 439<br>[Electronics Box Assembly] | 1 | LAB1P4_C1<br>(Returning ZSR) | | MPL2S4_D2 | N/A | 21 | **Stow in foam box launched in this location. |
| | | | | 723 | LiOH (6) | 1 Trpl | | Middeck<br>(LiOH Box) | MPL2S4_G1 | 2 | 65 | **For Wendy and Charlie only.<br><br>Reference LIOH CUE CARD<br><br>**Use triple CTB launched in MPLM for packing LiOH. Reference item 132. |
| | | | | 465 | Return Bag 465<br>[Malenchenko Return #2] | 1 Sngl | LAB1D5 | | MPL2S4_G2* | N/A | 20 | |
| X | | | | 715 | Excess Integration | 1 Sngl | ISS Staged | | MPL2S4_G2* | N/A | 39.2 | **Pack following line items before stowing.<br><br>**Retrieve single CTB from ISS. Report CTB B/C to MCC-H |
| | | | | 715.1 | ESP-2 Dust Covers | 7 | Brought in from EVA | | MPL2S4_G2*<br>(inside item 715) | N/A | Part of Above | **Comes in after EVA 1 and 3. |
| | | | | 715.2 | CMG Dust Covers | 4 | Brought in from EVA | | MPL2S4_G2*<br>(inside item 715) | N/A | Part of Above | **Comes in after EVA 2. |
| | | | | 715.4 | CMG/Z1 Shims | 4 | Brought in from EVA | | MPL2S4_G2*<br>(inside item 715) | N/A | Part of Above | **Comes in after EVA 2. |
| | | | | 715.5 | CMG/FSE Shims | 4 | Brought in from EVA | | MPL2S4_G2*<br>(inside item 715) | N/A | 0.28 | **Comes in after EVA 2. |

| Chg Flag | ☑ | FD | Crew Initials | Item # | Item Name | Qty | Initial Stowage | Temp Stowage | Stowage at Undock | Tox Level | Wt (lbs) | PROCEDURES/**Constraints/** **Comments |
|---|---|---|---|---|---|---|---|---|---|---|---|---|
| | | | | 413 | Return Bag 413<br>[CSLM Return Hardware] | 1 Sngl | LAB1P2_J1 | | MPL2S4_K1 | | 62.18 | |
| | | | | 444 | Return Bag 444<br>[EMU Gloves] | 1 Hlf | NOD1O1 | | MPL2S4_K1 | N/A | 19 | |
| | | | | 508 | Return Item 508<br>[Torque Wrench] | 1 | LAB1P4<br>(Returning ZSR) | | MPL2S4_K1 | N/A | 4 | |
| | | | | 806 | HEPA Filter | 3 | ISS Installed | | MPL2S4_K1 | | 4.47 | Do not stow unil R&R'd per timeline. |
| | | | | 419 | Return Bag 419<br>[12P Miscellaneous] | 1 Hlf | LAB1O1_D1 | | MPL2S4_K2 | | 9.64 | |
| | | | | 484 | Return Bag 484<br>[EMU Gloves] | 1 Hlf | LAB1P4_D2<br>(Returning ZSR) | | MPL2S4_K2 | N/A | 27.4 | |
| | | | | 515 | Return Bag 515<br>[L&M TOOLS] | 1 Hlf | NOD1D4<br>(Rack Front) | | MPL2S4_K2 | N/A | 20 | **See following line items for ops. |
| | | | | 515.1 | HRM Ziplock | 1 | See Swap List | | MPL2S4_K2<br>(inside item 515) | N/A | part of above | **Ziplock packed per swap tab. |
| | | | | 515.2 | Scopemeter Pressure Probe Kit<br>[S/N 1002] | 1 | NOD1O3<br>(in CTB S/N 1202) | | MPL2S4_K2<br>(inside item 515) | N/A | part of above | Pack Scopemeter Pressure Probe (Cal # M206129) and kit (S/N 1002) after FD04 ops complete.<br><br>**Verify a Female QD is not stowed in Kit. If Female QD found, stow in Strange Tool Bag (located in NOD1O4_E1 with B/C 006653J) and inform MCC-H. |

| Chg Flag | ☑ | FD | Crew Initials | Item # | Item Name | Qty | Initial Stowage | Temp Stowage | Stowage at Undock | Tox Level | Wt (lbs) | PROCEDURES/**Constraints/** **Comments |
|---|---|---|---|---|---|---|---|---|---|---|---|---|
| **MPLM Installed** | | | | | | | | | | | | |
| | | | | 486 | Return Item 486<br>[Baseplate Ballast Assembly] | 1 | LAB1P4_G<br>(Returning ZSR) | | MPLM Installed | N/A | 6 | **Installed in MPLM standoff per Flight Plan. |
| | | | | 487 | Return Item 487<br>[Baseplate Ballast Assy] | 1 | LAB1P4_G<br>(Returning ZSR) | | MPLM Installed | N/A | 6 | **Installed in MPLM standoff per Flight Plan. |
| **MPLM Clean-up** | | | | | | | | | | | | |
| | | | | 735 | Portable Breathing Apparatus (PBA) | 1 | | Deployed in MPLM | NODE Port (PBA locker) | N/A | 4.86 | PBA remains on ISS in the NODE locker.<br><br>{1.105 MPLM EGRESS} (SODF:MPLM: Nominal)<br><br>**Ref MPLM Setup Item 100. |
| | | | | 736 | Portable Fire Extinguisher (PFE) | 1 | | Deployed in MPLM | NOD1P2 (PFE locker) | 1 | 16.28 | PFE remains on ISS in the NODE locker.<br><br>{1.105 MPLM EGRESS} (SODF:MPLM: Nominal)<br><br>**Ref MPLM Setup Item 101. |
| | | | | 737 | PIVOT PINS/KBARS | 1 Hlf | | Deployed in MPLM | NOD1P4_A2 | N/A | 17.51 | **Pivot pins used to rotate MPLM RSPs.<br><br>**Bag contains two sets of pivot pins for bays 1 & 4 (outer) and two for bays 2 & 3 (inner).<br><br>** Ref MPLM Setup item 102. |
| | | | | 738 | ISS MPLM KIT<br>[CTB S/N 1207] | 1 Hlf | | Deployed in MPLM | NOD1O4_A1 | N/A | N/A | **Includes seat track studs, bungees and mesh bag.<br><br>** Ref MPLM Setup item 103. |
| | | | | 739 | Bungees Ziplock Bag | 1 | | Deployed in MPLM | FGB_226_1 | N/A | N/A | ** Ref MPLM Setup item 104. |
| | | | | 740 | SODF/FDF clips | crew pref | | Deployed in MPLM | STS Crew Accessory Bag | N/A | N/A | ** Ref MPLM Setup item 105. |
| | | | | 741 | MPLM Bungees | All | | Deployed in MPLM | NOD1O4_A1 (inside ISS MPLM Kit) (CTB S/N 1207) | N/A | N/A | |
| | | | | 742 | MPLM Seat Track Studs | All | | Deployed in MPLM | NOD1O4_A1 (inside ISS MPLM Kit) (CTB S/N 1207) | N/A | N/A | |

**MSG 062A (11-0680A) - FD07 EVA 2 PROCEDURE UPDATES**



Good Morning! Your EVA team is ready and excited for the EVA today but has a few torque updates and requests. Since we had problems on EVA 1 with releasing some bolts, we have gotten approval to increase the nominal release torque of the following:

REMOVE FAILED CMG (EVA, TIMELINES), pg FS 7-31, EV 1 step 6 and EV 2 step 5:
WAS: **PGT[A4, CCW2, 30.5]**
IS: **PGT[A5, CCW2, 30.5]**

REMOVE NEW CMG, (EVA, TIMELINES), pg FS 7 - 32, EV 1 step 4 and EV 2 step 11:
WAS: **PGT[A4, CCW2, 30.5]**
IS: **PGT[A5, CCW2, 30.5]**

In addition, there have been discussions about modifications to EVA 3 due to changes in priorities. Therefore, we would like you to be prepared to perform the following get-aheads during EVA 2 on MCC GO:

1. CLEANUP/INGRESS (EVA, TIMELINES), pg FS 7-36, EV 1 column after step 6, add:
   6a. Retrieve round scoop from the port ETSD lid.

The ISS Program would like to bring the failed S1 RJMC home as early as possible due to its failure being much earlier than expected. The return of this RJMC will allow us to determine the failure prior to 12A when two additional RJMCs launch. The round scoop is attached to a microconical fitting on the outside of the toolbox, and it will be used for RJMC remove on EVA 3. Since you did such a great job on EVA 1 with the MISSE retrievals, we believe that the RJMC could be added without extending EVA 3 past 6:30. Much more information will be sent up for you to review on FD08.

2. Pg FS 7-36, EV 2 column after step 9 add:
   9a. Retrieve Prybar/Forceps caddy from the Aft Tray of the port TSA.
   9b. Close and latch all four TSA latches.

You can look at TSA LAYOUT (EVA, TOOLS AND STOWAGE), pg FS 8-2 to see the TSA layout. We want to bring in the caddy so that we can reconfigure the forceps if needed for the gap filler task if that is deemed necessary.

3. Remove the APFR off of the SSRMS and place on Toolbox # 1 (pg. FS 7-46, EV 1 step 17 and 19. The WIF adapter needs to come back into the A/L). Removal of the APFR will allow for an SSRMS walk-off to the MT if necessary for the gap filler task.

4. Relocation of the CETA cart APFR to Lab WIF 09 (pg FS 7-51, EV 2 steps 1-5). This is a get-ahead for STS-121.

5. Installation of the wire tie on the FHRC MLI.

6. Return of the two PRDs on toolboards to the A/L ETSDs. You can look at TOOLBOX PANEL AND SLOT LABELS(EVA, TOOLS AND STOWAGE) pg FS 8-39 for the layout of the ETSD. The PRDs would go in slot 7, one in each A/L ETSD

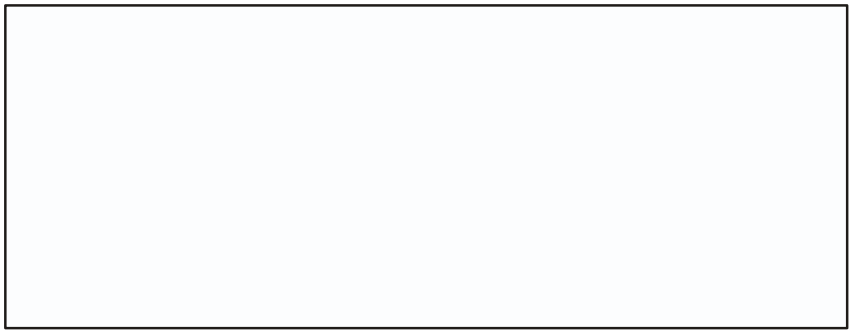

Bag A - TBR

---

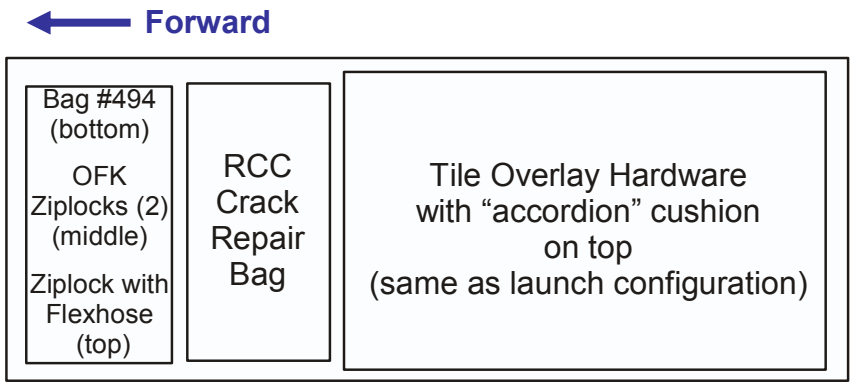


Bag B
(SED32108752-303)

---

Bag C - Same as Launch

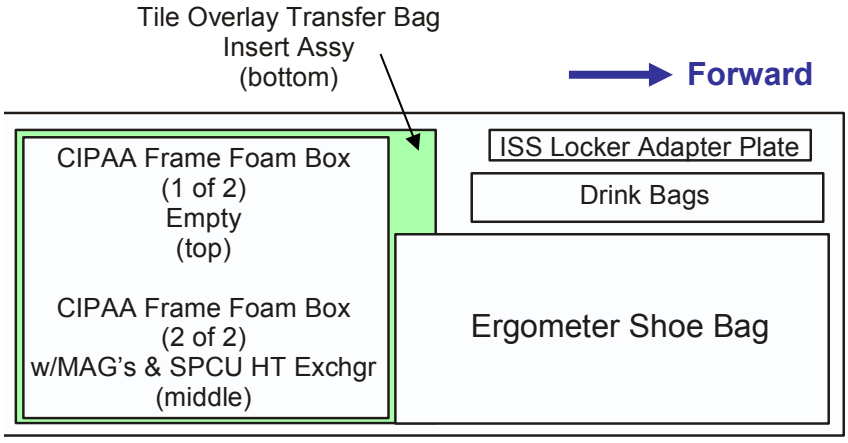


Bag D
(SED32108714-308)

Please do not add any more to this bag. The STBD Bag stack weight and c.g. limits are maximized.

---

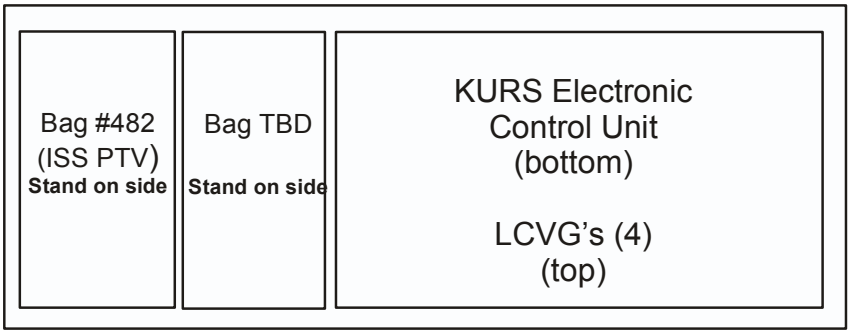


External A/L
Floor Bag

| REV | ZONE | DESCRIPTION OF CHANGE |
|---|---|---|
| E | | 1. EFFECT: STS-114;AUTH: EVA-00034R12 21497-ICA-0013/CHIT 3013<br>2. ADDED -303 RETURN ASSY<br>3. ADDED NEW ITEMS 22-31 IN -303 ASSY<br>4. ADDED NOTES 7 & 8<br>5. ADDED 2 SHEETS<br>6. UPDATED F/D & F/D |

| QTY REQ | QTY REQ | CODE IDENT | PART NUMBER | NOMENCLATURE | LOCATION | SOURCE | NO |
|---|---|---|---|---|---|---|---|
| 5 | 5 | | SED33118813-714 | STUFFED BAG ASSY | | | 18 |
| 5 | 5 | | SED33118813-728 | STUFFED BAG ASSY | | | 17 |
| 5 | 5 | | SED33118813-712 | STUFFED BAG ASSY | | | 16 |
| 5 | 5 | | SED33118813-726 | STUFFED BAG ASSY | | | 15 |
| 5 | 5 | | SED33118813-710 | STUFFED BAG ASSY | | | 14 |
| | | | | | | | 13 |
| 1 | 1 | | SJD33118869-601 | OVERLAY IVA PRACTICE KIT | | | 12 |
| 1 | 1 | | SED33118804-301 | OVERLAY TEMPLATE ASSY | | | 11 |
| 1 | 1 | | SED33118656-301 | OVERLAY TILE REPAIR ASSY | | | 10 |
| 1 | 1 | | 528-33952-1 | SPECIAL CUSHION, RCC/ TILE OVERLAY | | | 9 |
| | | | | | | | 8 |
| 2 | 2 | | SED33118867-301 | OTR PIN CUSHION | | | 7 |
| 1 | 1 | | SED33118825-301 | TORQUE INDICATOR DRIVER | | | 6 |
| 1 | 1 | | SED33118547-301 | LOW TORQUE STEPPER CLUTCH | | | 5 |
| 50 | 50 | | SDD33118808-702 | RETENTION PIN ASSEMBLY | | | 4 |
| 1 | 1 | | SED33118750-301 | CRACK REPAIR BAG | | | 3 |
| 1 | 1 | | SEG46117193-302 | CTB HALF, CREW CARE PACKAGE | | | 2 |
| REF | REF | | V828-660208-059/ V850-000110-043 | 5 MLE STWG BAG | | | 1 |
| | | | | | | | |
| 303 | 302 | | SED32108752 | RCC/TILE OVERLAY | | | |

8. ITEMS (27) SURFACE SAMPLER KIT, (28) CDMK, (29) PORTABLE CLINICAL BLOOD ANALYZER, (30) ISS MEDICAL ACCESSORIES KIT & (31) VALVE ASSEMBLY, GRAB SAMPLER WERE PRE-PACKED IN ITEM (26) CTB HALF BY CREW.

5 7. ITEM (22) ZIPLOCK BAG (24X24) CONTAINS ITEMS (23) INTEGRATED FLEXHOSE, (24) WASTE WATER BULKHEAD & (25) QUICK DISCONNECT COUPLING AND IS TO BE PLACED ON TOP OF ITEM (26) CTB HALF AS BEST FITS.

6. KSC USA/FCE TO PLACE TWO 13 X 18 ZIPLOCK BAGS OF OVERFLOW OFK INTO 5 MLE STOWAGE BAG.

4 5. KSC USA/FCE TO REMOVE (7) OF THE (9) SPECIAL CUSHION, RCC/ TILE OVERLAY PARTS 4-16.

3 4. USA/FCE TO PLACE:

QTY=5 (14) & QTY=1 (15) INTO APPROPRIATE ZIPLOCK BAG.

QTY=4 (15) & QTY=4 (16) INTO APPROPRIATE ZIPLOCK BAG.

QTY=1 (16) & QTY=5 (17) INTO APPROPRIATE ZIPLOCK BAG.

ALL QTY'S OF (18), (19), (20) & (21) INTO APPROPRIATE ZIPLOCK BAG.

ATTACH VELCRO HOOK TO CENTER OF EACH BAG.

2 3. USA/FCE TO PLACE "TILE" INTO APPROPRIATE ZIPLOCK BAG. ATTACH VELCRO HOOK TO CENTER OF BAG.

1 2. USA/FCE TO PLACE QTY 50 (4) RETENTION PIN ASSEMBLY INTO APPROPRIATE ZIPLOCK BAG. ATTACH VELCRO HOOK TO CENTER OF BAG.

1. WHEN MORE THAN ONE PART NUMBER IS SHOWN, THE SUBSEQUENT PART NUMBER(S) IS/ARE AN ACCEPTABLE SUBSTITUTE.

NOTES: UNLESS OTHERWISE SPECIFIED

UNLESS NOTED OTHERWISE DIM ARE IN INCHES, TOL ARE:
.0 ± .1 .000 ± .005
.00 ± .02 ANGULAR ± .5°

SURFACE FINISH IN MICROINCHES RMS UNLESS NOTED OTHERWISE ✓

NEXT ASSY AS ALLOCATED

DWG FILENAME SED32108752.DRW

DRAWING TYPE Flight CCCD

| SIGNATURES | | DATE |
|---|---|---|
| DR | KEITH CAMPBELL | 7-29-05 |
| ENG | | |
| CH | JANET AGEE | 7-29-05 |
| APP | Y. CARMONA | 07/29/05 |
| QE | | |
| MATL | | |
| STRESS | | |
| AUTH | | |
| FINAL APP | | 7/29/05 |

NATIONAL AERONAUTICS AND SPACE ADMINISTRATION

LYNDON B. JOHNSON SPACE CENTER HOUSTON, TEXAS

RCC/TILE OVERLAY

PROJECT SHUTTLE

| SIZE | CAGE CODE | DWG NO | REV |
|---|---|---|---|
| C | 21356 | SED32108752 | E |

SCALE N/A ORG MO FMT P02MAY04 SHEET 1 OF 4

STATUS: Check for DCNs against the drawing.

| QTY REQ | QTY REQ | CODE IDENT | PART NUMBER | NOMENCLATURE | LOCATION | SOURCE | NO |
|---|---|---|---|---|---|---|---|
| 5 | | | SDD46108778-301 | VALVE ASSEMBLY, GRAB SAMPLER | | | 31 |
| 2 | | | SEG52100803-301 | ISS MEDICAL ACCESSORIES KIT | | | 30 |
| 1 | | | KLSI220032-301 | PORTABLE CLINICAL BLOOD ANALYZER | | | 29 |
| 1 | | | SEG46117195-302 | CDMK | | | 28 |
| 2 | | | SEM46109455-308 | SURFACE SAMPLER KIT | | | 27 |
| 1 | | | SEG33111836-303<br>SEG33111836-301 | CTB HALF | | | 26 |
| 1 | | | 683-16348-811 | QUICK DISCONNECT COUPLING | | | 25 |
| 1 | | | 683-16348-810 | WASTE WATER BULKHEAD FEEDTHROUGH CAP | | | 24 |
| 1 | | | 683-56836-31 | INTEGRATED FLEXHOSE ASSY | | | 23 |
| 1 | | | 528-50000-8 | ZIPLOCK BAG (24 X 24) | | | 22 |
| 5 | 5 | | SED33118813-732 | STUFFED BAG ASSY | | | 21 |
| 5 | 5 | | SED33118813-716 | STUFFED BAG ASSY | | | 20 |
| 5 | 5 | | SED33118813-730 | STUFFED BAG ASSY | | | 19 |
| | | | | | | | |
| 303 | 302 | | SED32108752 | RCC/TILE OVERLAY | | | |

| SIZE | CAGE CODE | DWG NO | REV |
|---|---|---|---|
| C | 21356 | SED32108752 | E |
| SCALE N/A | ORG MO | FMT P02MAY04 | SHEET 2 OF 4 |

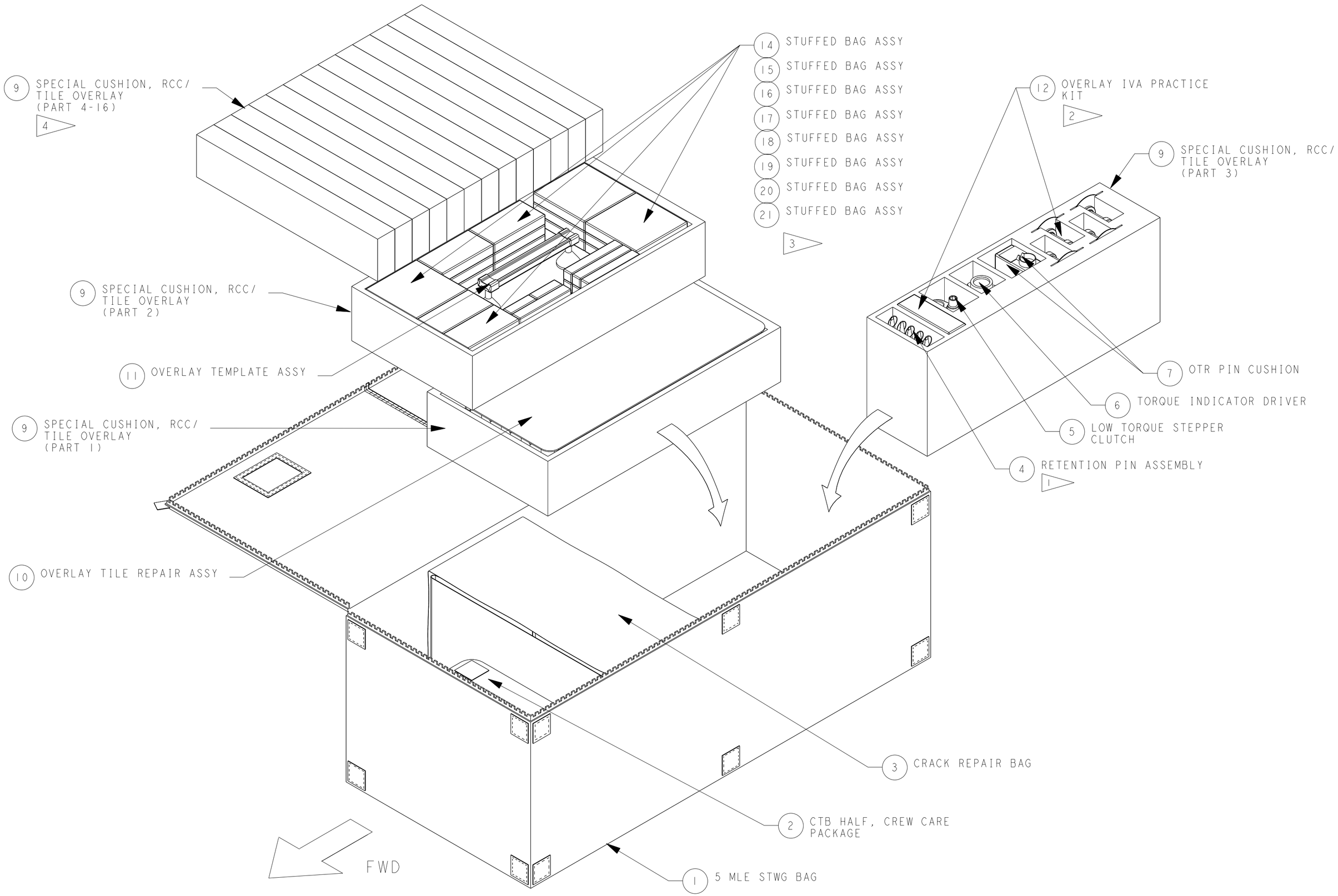


## -302 ASSY

| SIZE | CAGE CODE | DWG NO | REV |
|---|---|---|---|
| C | 21356 | SED32108752 | E |
| SCALE N/A | ORG MO | FMT P02MAY04 | SHEET 3 OF 4 |

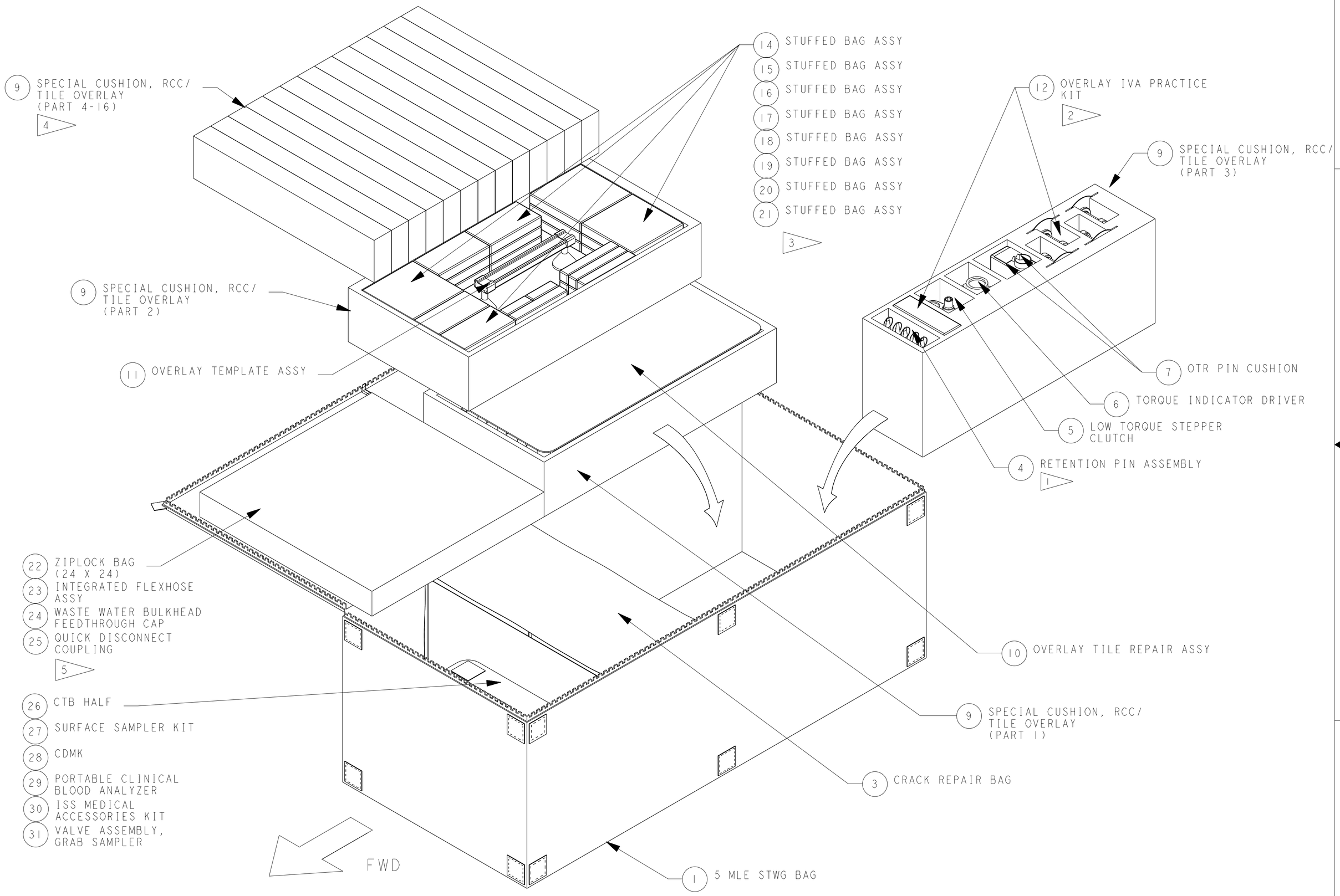


## -303 ASSY

| SIZE | CAGE CODE | DWG NO | REV |
|---|---|---|---|
| C | 21356 | SED32108752 | E |
| SCALE N/A | ORG MO | FMT P02MAY04 | SHEET 4 OF 4 |

| REV | ZONE | DESCRIPTION OF CHANGE |
|---|---|---|
| J | | 1. EFFECT: STS-114;<br>AUTH: EVA-00034R12/EVA-0051R17<br>2. ADDED RETURN ASSY -308<br>3. ADDED ITEMS 5,11,12,13,14,15,16<br>4. ADDED NEW SHEET<br>5. UPDATED P/L & F/D |

| QTY REQ | QTY REQ | CODE IDENT | PART NUMBER | NOMENCLATURE | LOCATION | SOURCE | NO |
|---|---|---|---|---|---|---|---|
| 1 | | | 683-16347-825 | 3/8 INCH GAMAH PLUG | | | 16 |
| 1 | | | 2351350-1-1 | HEAT EXCHANGER, SPCU | | | 15 |
| 1 | | | SEG46119082-301 | ISS LOCKER ADAPTER PLATE | | | 14 |
| 6 | | | 0110-110110-03 | MODIFIED DISPOSABLE INSUIT DRINK BAG | | | 13 |
| 1 | | | SED33118866-301 | EVA TRANSFER BAG INSERT ASSY | | | 12 |
| 1 | | | SED32105425-307 | ERGOMETER SHOE & ACCESSORY BAG ASSY | | | 11 |
| 1 | 1 | | 528-33960-1 | SPECIAL CUSHION, TVIS TORQUE WRENCH | | | 10 |
| | 1 | | SEG33116504-301 | TVIS TORQUE WRENCH | | | 9 |
| | 1 | | 8386A | VELOCICALC METER | | | 8 |
| | 1 | | SED46115810-303 | TVIS FLYWHEEL CASE | | | 7 |
| | 1 | | SED46113530-305 | TRANSFER CASE ASSY | | | 6 |
| 6 | | | SED13101720-709 | MAXIMUM ABSORPTION GARMENT III | | | 5 |
| | 2 | | SV828550-2 | TILE REPAIR BACKPACK FRAME | | | 4 |
| 5 | 5 | | SED33116397-703 | WIPE, EVA | | | 3 |
| 1 | 1 | | 528-33928-5 | SPECIAL CUSHION, TILE REPAIR FRAME (8 PARTS) | | | 2 |
| REF | REF | | V828-660208-059<br>V850-000110-043 | 5 MLE STWG BAG | | | 1 |
| | | | | | | | |
| 308 | 307 | | SED32108714 | SM MD STWG BAG CONTENTS INSTL | | | |

6. KSC USA/FCE TO ADD FILLER FOAM OR MODIFY CUSHION AS REQUIRED.

5. KSC USA/FCE TO REMOVE EVA WIPES FROM CIPA DISCARD CONTAINER (P/N=SED33117130-301) AND PLACE INTO 12 X 12 ZIPLOCK BAG. ATTACH VELCRO HOOK TO CENTER OF BAG. PLACE IN CUSHION.

3 4. PLACE (9) TVIS TORQUE WRENCH INTO APPROPRIATE ZIPLOCK BAG. ATTACH VELCRO HOOK TO CENTER OF BAG.

2 3. MINI-CELL FOAM ADDED TO CUTOUT FOR ITEM (7) TVIS FLYWHEEL CASE.

1 2. PLACE ITEM (8) VELOCICALC METER INTO APPROPRIATE ZIPLOCK BAG. ATTACH VELCRO HOOK TO CENTER OF BAG.

1. WHEN MORE THAN ONE PART NUMBER IS SHOWN, THE SUBSEQUENT PART NUMBER(S) IS/ARE AN ACCEPTABLE SUBSTITUTE.

NOTES: UNLESS OTHERWISE SPECIFIED

UNLESS NOTED OTHERWISE DIM ARE IN INCHES, TOL ARE:
.0 ± .1 .000 ± .005
.00 ± .02 ANGULAR ± .5°

SURFACE FINISH IN MICROINCHES RMS UNLESS NOTED OTHERWISE ✓

NEXT ASSY AS ALLOCATED

DWG FILENAME SED32108714.DRW

DRAWING TYPE Flight CCCD

| SIGNATURES | | DATE |
|---|---|---|
| DR | KEITH CAMPBELL | 7-26-05 |
| ENG | | |
| CH | KEN MOULDER | 7-26-05 |
| APP | Y. CARMONA | 07/29/05 |
| QE | | |
| MATL | | |
| STRESS | | |
| AUTH | | |
| FINAL APP | | 7/29/05 |

**NATIONAL AERONAUTICS AND SPACE ADMINISTRATION**

LYNDON B. JOHNSON SPACE CENTER HOUSTON, TEXAS

SM MD STWG BAG CONTENTS INSTL

PROJECT SHUTTLE

| SIZE | CAGE CODE | DWG NO | REV |
|---|---|---|---|
| C | 21356 | SED32108714 | J |

SCALE N/A ORG MO FMT P02MAY04 SHEET 1 OF 4

**STATUS: Check for DCNs against the drawing.**

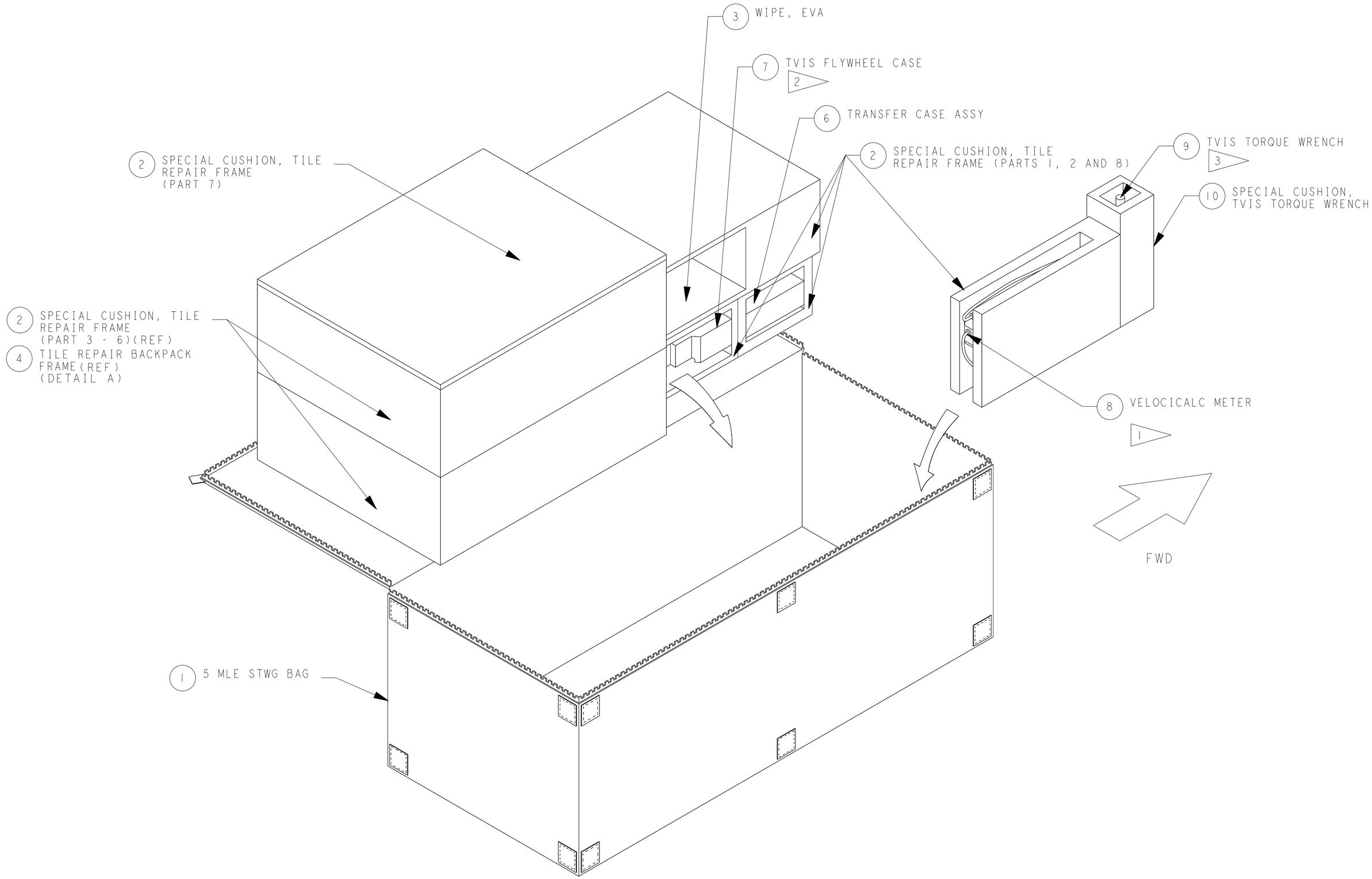


## -307 ASSY

| SIZE | CAGE CODE | DWG NO | REV |
|---|---|---|---|
| C | 21356 | SED32108714 | J |
| SCALE N/A | ORG MO | FMT P02MAY04 | SHEET 2 OF 4 |

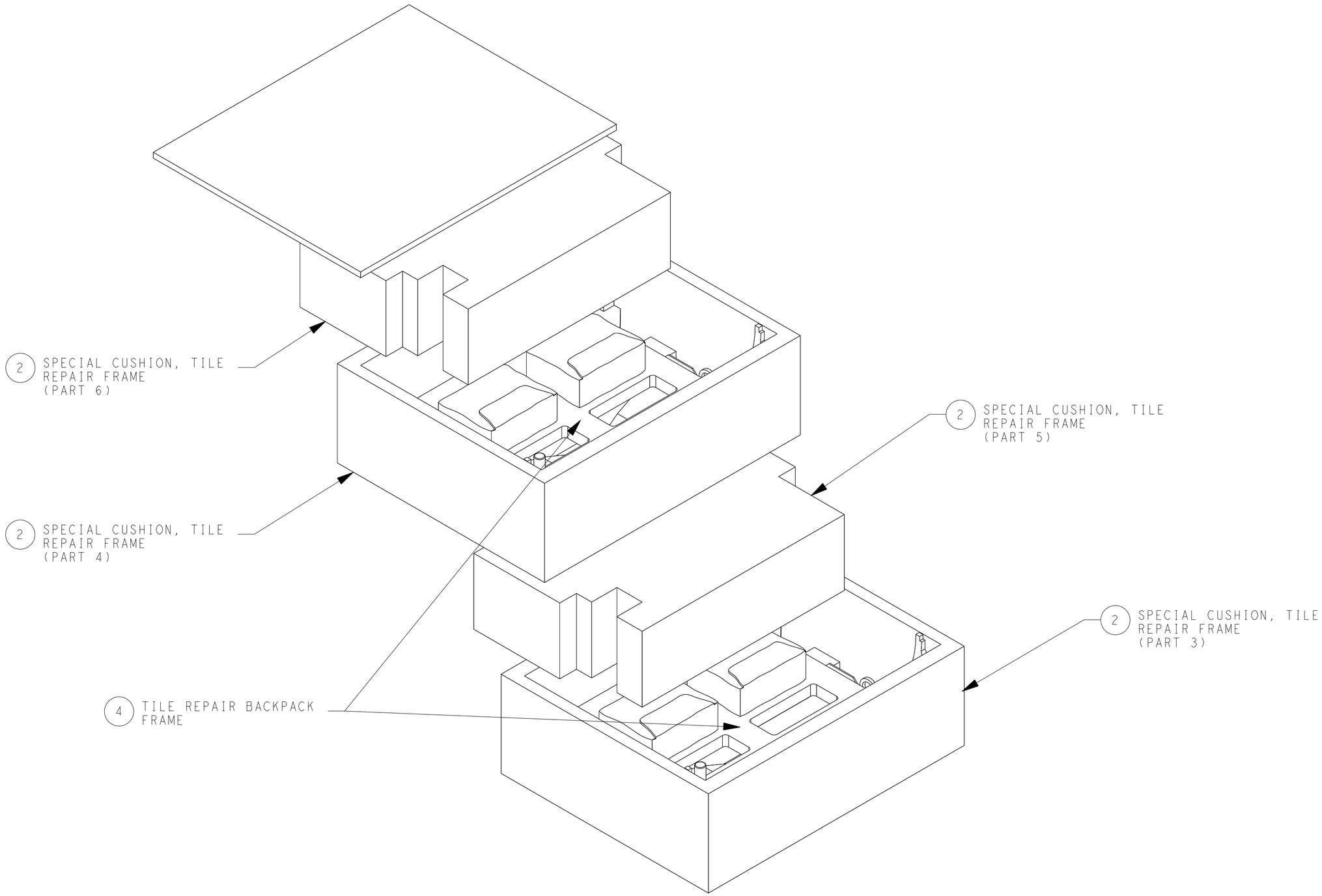


**DETAIL A**

| SIZE | CAGE CODE | DWG NO | REV |
|---|---|---|---|
| C | 21356 | SED32108714 | J |
| SCALE N/A | ORG MO | FMT P02MAY04 | SHEET 3 OF 4 |

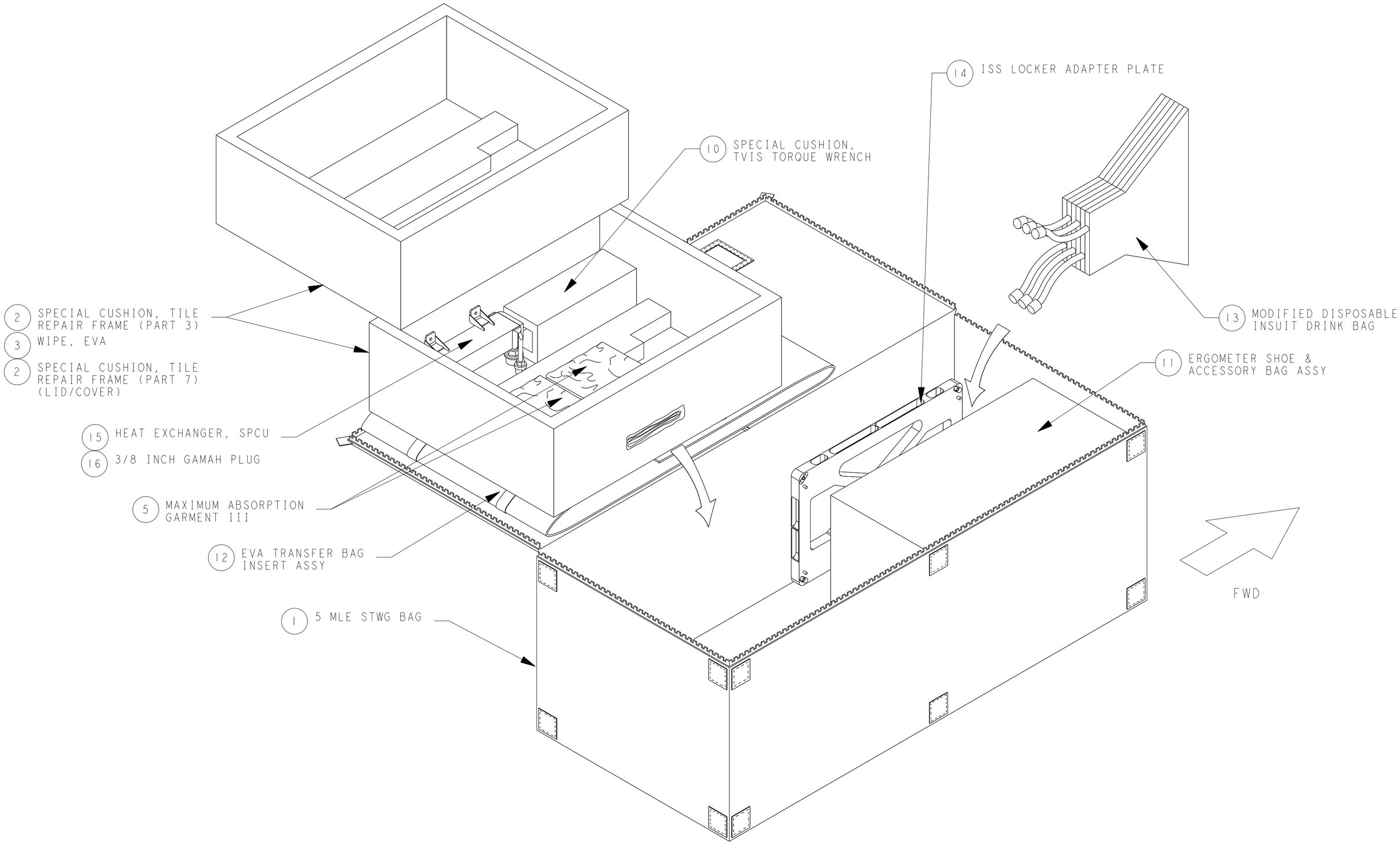


## -308 ASSY

| SIZE | CAGE CODE | DWG NO | REV |
|---|---|---|---|
| C | 21356 | SED32108714 | J |
| SCALE N/A | ORG MO | FMT P02MAY04 | SHEET 4 OF 4 |

Here are the summary results of the FD6 MMT.

The team reiterated that all of the TPS tile has been cleared for entry, save for the ongoing gap filler discussion. The OPO team has a little more work to do to verify that the W1 blanket will not pose a hazard to other parts of the vehicle (eg the vertical stabilizer) if all or part of it becomes detached during entry. We expect that answer at the FD7 MMT on Monday.

The team reviewed a lot of RCC data today, and all areas of interest (AOI) have been cleared for entry. As with the tile, the final check for the RCC pertains to the expected heating conditions that could result from tripping the BL early, and/or having ABLT. Because of the position of the 2 protruding gap fillers on the left and right side nose tiles, the team is analyzing the possibility of having early transition to turbulent (higher heated) flow washing onto portions of the RCC. For an early transition we are looking at the possibility of this on one or both wings, depending on whether we have ABLT or just early transition. The team is working very hard toward resolution on this for the FD7 MMT on Monday.

As we mentioned to you yesterday, in the mean time the team is also working on a potential EVA task to deal with the protruding gap fillers. The leading candidate for this would be an added task to EVA 3, and if required we'll offer more details after the FD7 MMT on Monday, if in fact we are unable to clear the concern for flying entry with the gap fillers protruding.

Finally, the KSC team gave an extensive report today on the conditions of the launch pad, MLP, FSS, and surrounding facility areas. It was noted by the pad experts that this is perhaps the cleanest post-launch condition on record, yet another testimony of the many RTF improvements coming to fruition.

Finally, we are including in your mail two presentations, one from the TPS tile experts given to the FD5 MMT on Saturday, and one from the RCC experts presented to the FD6 MMT on Sunday. They were quite lengthy and detailed so we're leaving out some of the backup charts, but if you have questions don't hesitate to ask.

# Flight Day 5 TPS Damage Assessment

Damage Assessment Team

# Composite Lower Surface Damage Sites Requiring DAT Evaluation

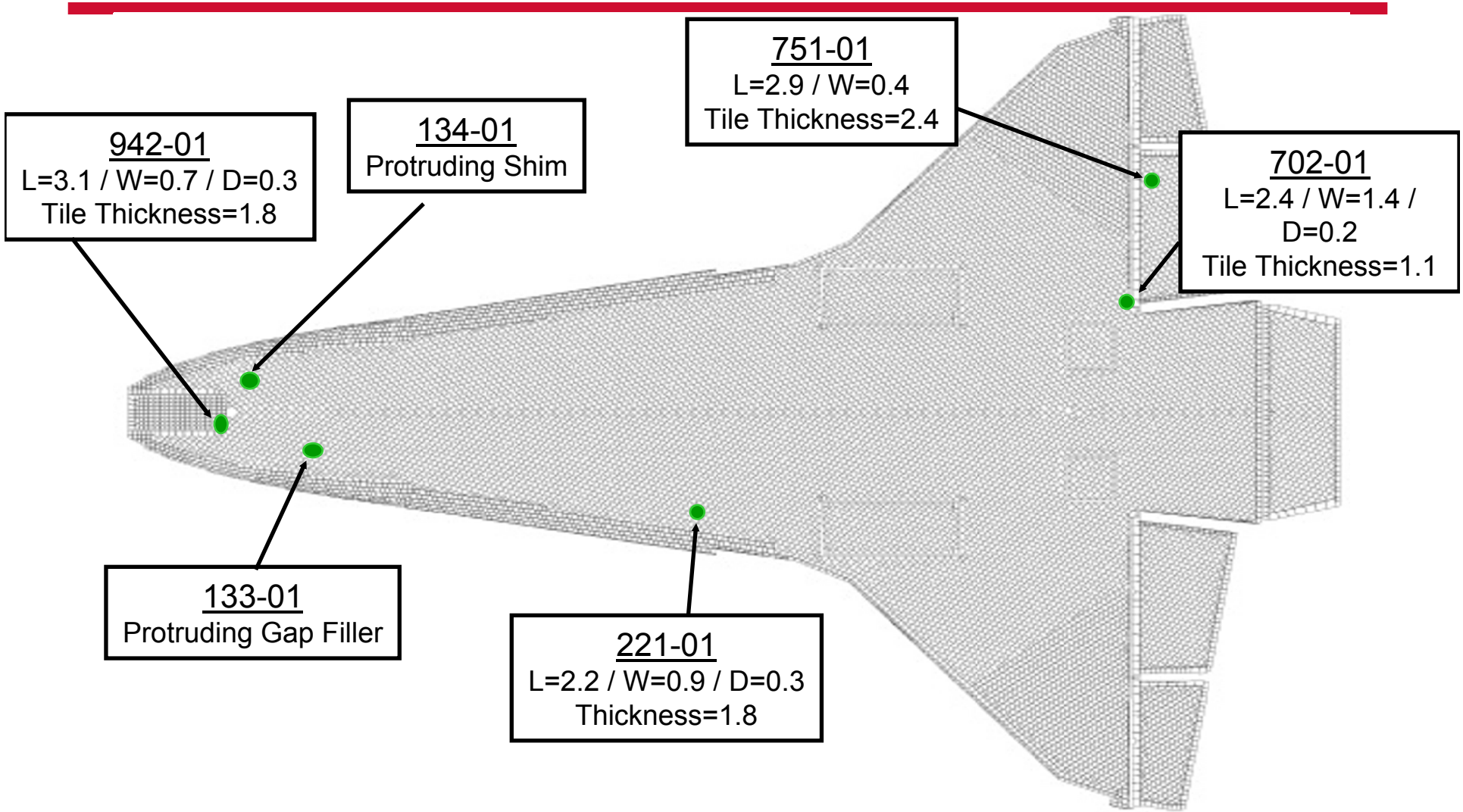

# Upper Surface Damage Site

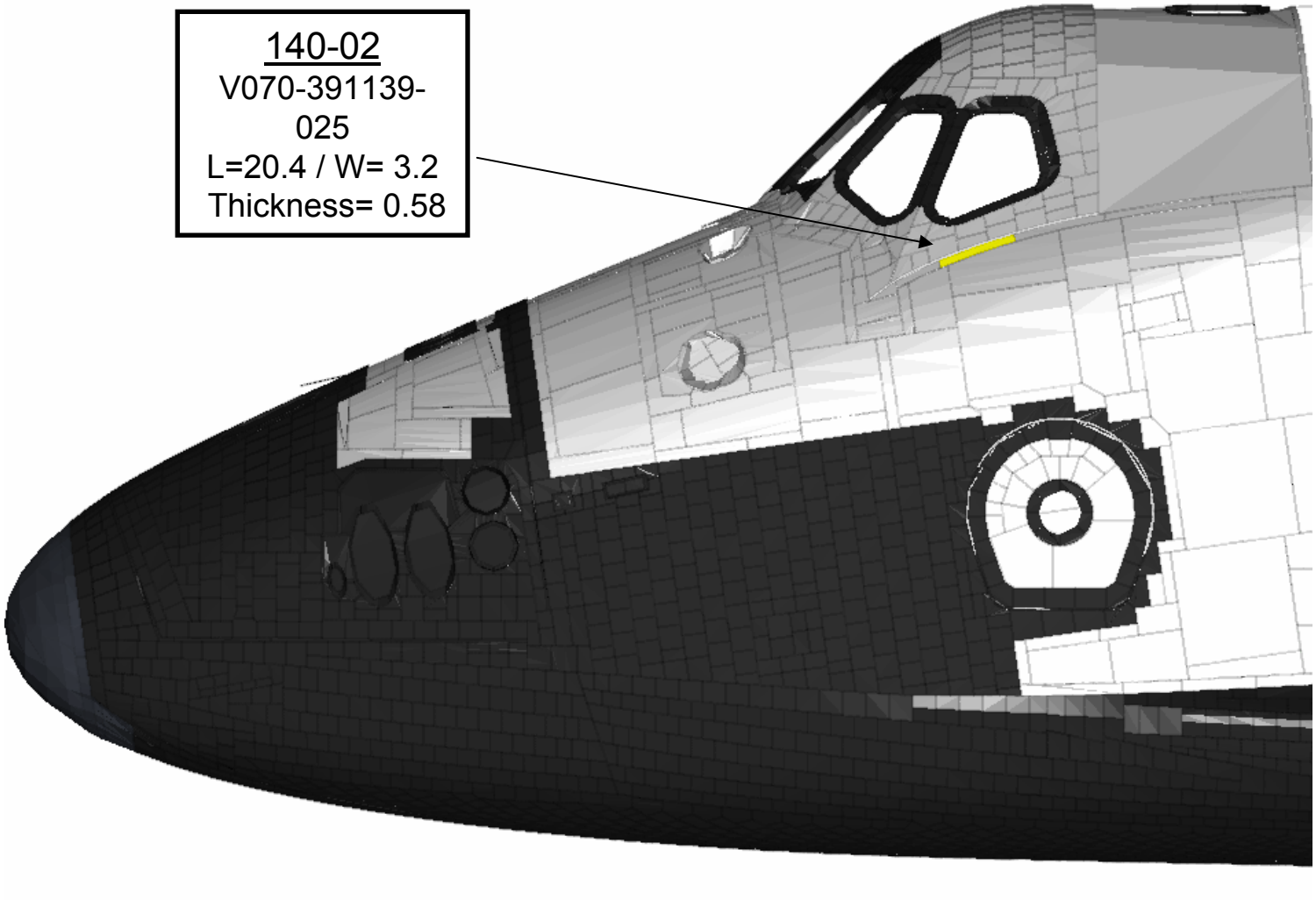

# Window 1 Blanket D-114-RPM-140-02

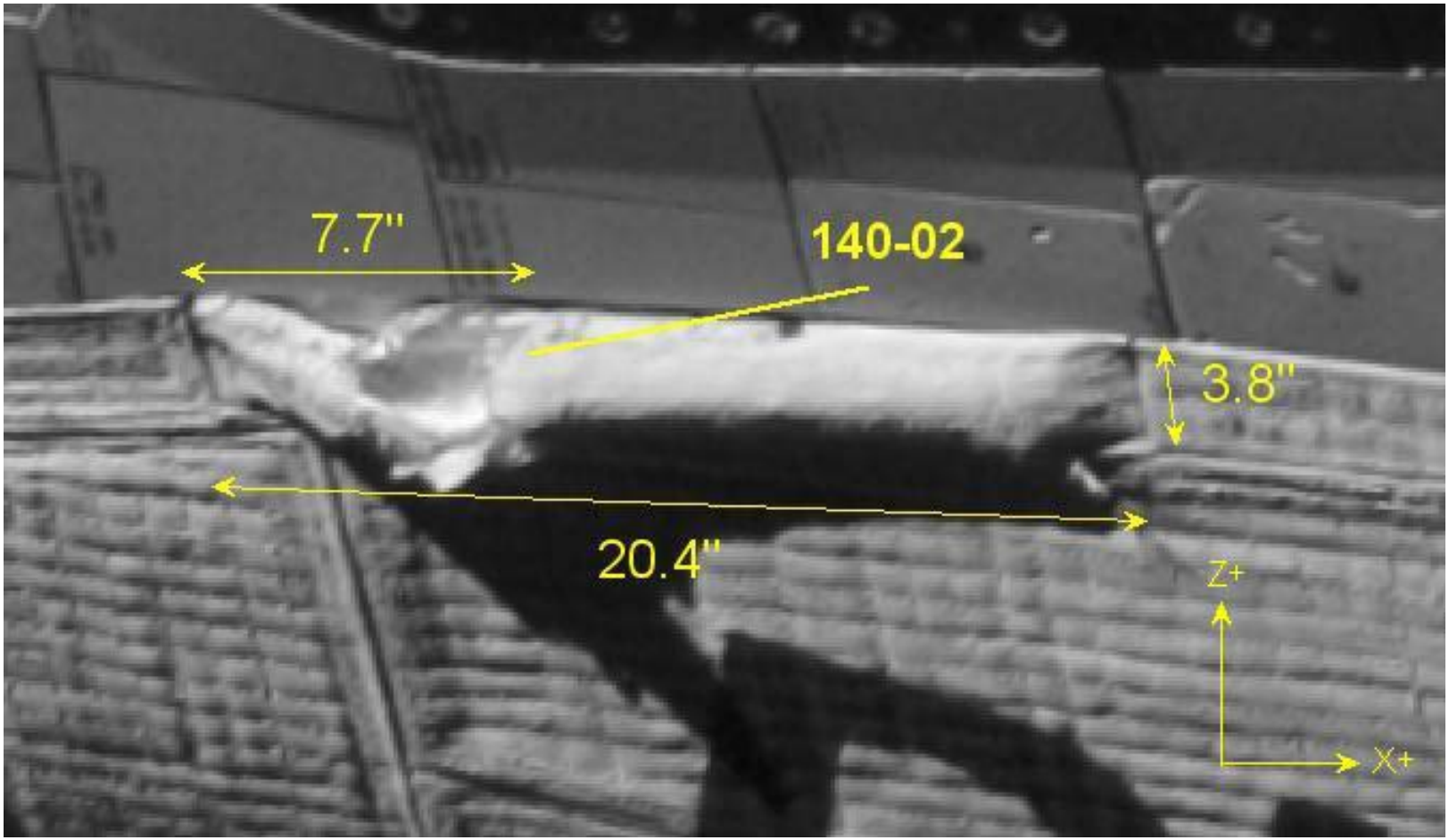

# STS-114 Damaged Side Window Blanket Predicted Nominal Entry Temperatures

| Material | Temperature Limit | | Peak Temperature (ºF) | |
|---|---|---|---|---|
| | Multi-Use | Single Use | **Damaged** | **Undamaged** |
| LI-900 Node 7 | 1200 | 2100 | **574** | **561** |
| LI-900 Node 16 | 1200 | 2100 | **495** | **445** |
| LI-900 Node 25 | 1200 | 2100 | **438** | **363** |
| SIP Node 116 | 550 | 625 | **251** | **168** |
| | | | | |
| FI Blanket Node 61 | 1500 | 1800 | **643** | **624** |
| FI Blanket Node 151 | 1500 | 1800 | **582** | **491** |
| FI Blanket Node 241 | 1500 | 1800 | **517** | **367** |
| FI Blanket Node 1061 | 1500 | 1800 | **372** | **198** |
| | | | | |
| IML/RTV Node 115 | 550 | 625 | **320** | **124** |
| **Al Structure** Node 2065 | 350 | 350 | **298** | **123** |

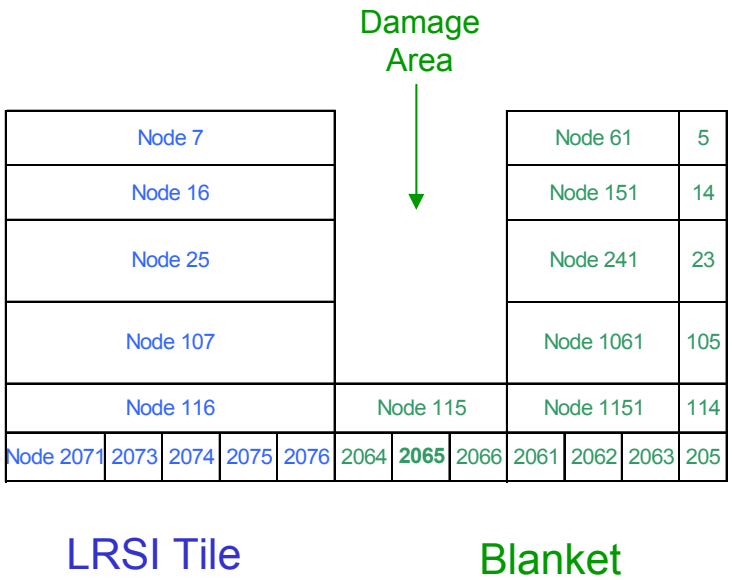


- Aluminum structure predicted to be 52 degrees below limit
- Independent JSC-Thermal Branch analysis corroborates results

# RH NLGD Tile Damage

**D-114-RPM-942-01**

942-01
L=3.1 / W=0.7 / D=0.3
Tile Thickness=1.8

# RH NLGD Damage Analysis

- Parameters
  - Cavity Dimensions 2.1 x 0.85 x 0.3d; entry 60°; exit 53°, sidewall 86°
    - Model set-up requires both sidewalls to be equal, so highest angle was chosen to yields conservative approach
  - Keq 130/146
  - Bump factors utilized on exit wall (thermal barrier)

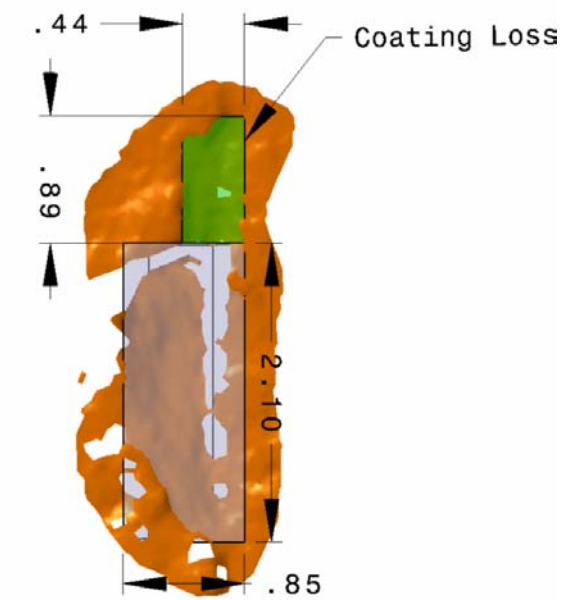


**Flow Direction**

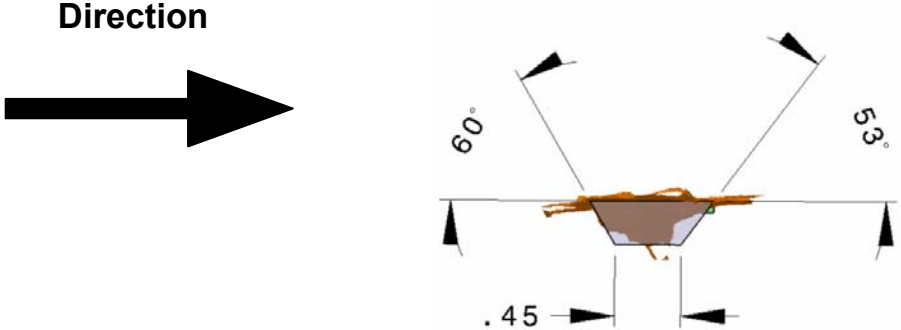

# RH NLGD Damage Analysis

- Cavity Results

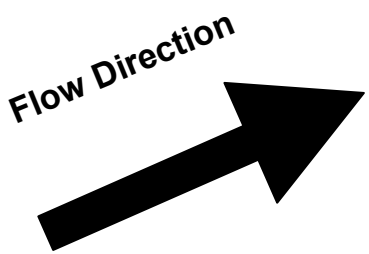


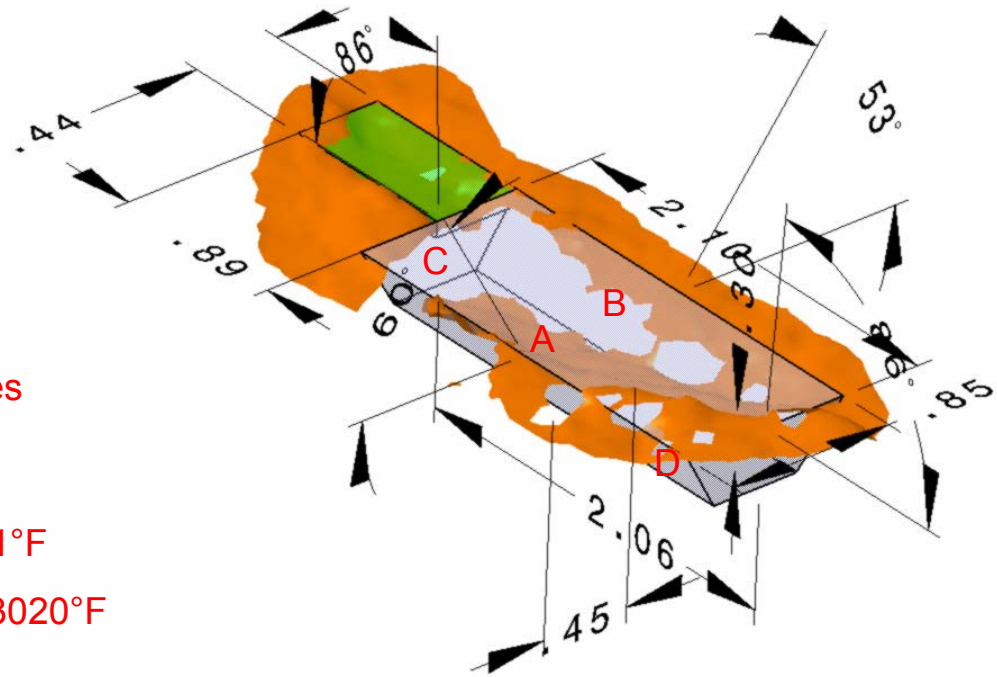


Cavity Area Peak Temperatures

A = Cavity Floor = 2846°F

B = Thermal Barrier = 2771°F

C = Exposed Gap Filler = 3020°F

D = Entry Wall = 2824°F

# STS-114
# Protuberance Assessment Activities

- Flight History
  - Organize story on temp response of STS-28 and STS-73 and relevance to STS-114
- Uncertainty Assessment of BLT Correlation
  - Uncertainty in correlation for previous flight data
  - Uncertainty in predicted BLT for STS-114 protuberances
  - Comparison of predicted BLT using heritage Boeing methodology and RTF develop methodology
- Inputs on need for follow-on OBSS Inspection
  - Discussion between BLT Team and Imaging Team
  - Provide Recommendation for potential OBSS inspection

# Early BLT for STS-114

- Flight History provides significant confidence that STS-114 will experience BLT at/prior to Mach 18
  - STS-73 BLT @ Mach 18.5 (weight similar to STS-114)
  - STS-28 BLT @ Mach 18
  - Application of BLT correlations to conditions above Mach ~18 is extrapolation
- BLT Team will recommend an upper limit Mach number for STS-114 assessment
  - Supports a Parametric study of BLT Time
  - Assessment of Elevated heating to RCC and TPS components needed
- Analyses Tools for aeroheating environments (XF0002)
  - Turbulent ***flight*** temperature data at Mach numbers above ~18 is not available
    - XF0002 calibrated to STS 1-5 flight data
    - XF0002 predictions are continually reviewed post-flight
  - Assessment of heating environments above Mach ~18 is extrapolation

# Protruding Chine Gap Filler

D-114-RPM-133-01

V070-391061-081, -088, -082

Tile Thickness:  2.0”

# Evaluation of High Roughness Effect on Orbiter Bottom Skin Structure

- **Protruding gap filler on STS-114 is predicted to cause very early transition to turbulent heating, raising temperatures on the bottom of the Orbiter**
- **The effect on structural margins evaluated with**
  - **No TPS damage is present**
  - **Local gradients from partial transition not included**
- **Internal loads are available for ISS Heavy Fwd trajectory with nominal (.130/.146) and high (.250) roughness with bottom sun Entry Interface temperatures**
  - **Can be compared to PE certification thermal cases**
  - **Above thermal loads have been combined with certification (2.5g/9.6fps) mechanical loads and reduced (2.0g/6fps) mechanical loads**
- **Combined loads were evaluated using the stress assessor tool (DTT) with no local thermal gradient (no TPS damage)**
  - **Skin panels on bottom surface excepting wing skin stringer and NLGD**

# Evaluation of High Roughness Effect on Orbiter Bottom Skin Structure

- **ISS Heavy Fwd with high roughness is nominally worse than PE certification, but maintains positive MS when combined with 2.0g/6fps mechanicals**
  - **ISS trajectory gives modest relief which is (more than) offset by higher roughness**
    - **Net is small loss of margin**
  - **Mid fuselage is most sensitive and have -.05 margin for cert mechanical and +.02 margin with 2.0g/6pfs mechanicals**

# Protruding Gap Filler Entry Heating

- Protruding gap filler can result in early asymmetric transition
- Flight control assessment is in work to evaluate impact of asymmetric boundary layer transition earlier than Mach 19
  - Entry GN&C is certified for asymmetric transition beginning at Mach 19
  - Aeroheating to provide earliest Mach number for consideration today
  - Aerodynamics is recommending maintaining Mach 19 ABLT values for higher Mach numbers
  - Flight control assessment with nominal aero combined with ABLT to be completed by Sunday
  - Flight control assessment with aerodynamic uncertainties combined with ABLT to be completed by Wednesday
    - This assessment will be run if trends for nominal assessment warrant further evaluation
- Development of load databases for partial transition was scheduled post-RTF
  - Evaluating options to assess impact of partial transition for STS-114

# LESS Subsystem Summary

## Flight Day 6 MMT

Mike Gordon, LESS SSM

7/31/2005

# Current Status



- **LESS/RCC PRT has reviewed four initial threats to the Wing Leading Edge RCC and the results are summarized as follows**

| WLE Panel | Original Issue | How Dispositioned | Result |
|---|---|---|---|
| 6-7L | WLEIDS #4 Probable Impact at 121s that was coincided with Radar Indications and SRB Separation | Reviewed FD2 OBSS Data | Black Spots on 6L & 7L |
| 7L Apex | Black Spots on ID 721L07-01 | Focused Inspection #1 | No SiC Damage Detected<br>See Focused Inspection Results |
| 7L Lower | Black Spots on ID 721L07-02 | Focused Inspection #2 | No SiC Damage Detected<br>See Focused Inspection Results |
| 6L Lower | Black Spots on ID 711L06-01 | Focused Inspection #3 | No SiC Damage Detected<br>See Focused Inspection Results |
| 19-20L | WLEIDS #8 Probable Impact at 50s that was coincided with Qmax | Reviewed FD2 OBSS Data for Panels 19-22L | Clean LDRI - No Issue |
| 10-11L | WLEIDS #7 Questionable Impact at 526s that coincided with ET Separation | Reviewed WLEIDS raw data files | No Impact Detected by WLE |
| 9-11R | ET Camera indicated foam releases at 155s that may have hit WLE | Reviewed FD2 OBSS Data<br>SE&I performed DTA | Clean LDRI Scans<br>Impact within KE Allowable<br>(FD3 SE&I MMT Report) |

# Current Status



- **LESS/RCC PRT has reviewed several black spot indications from Level 2 Processing of FD2 LDRI Data and requested a focused Inspection of a**

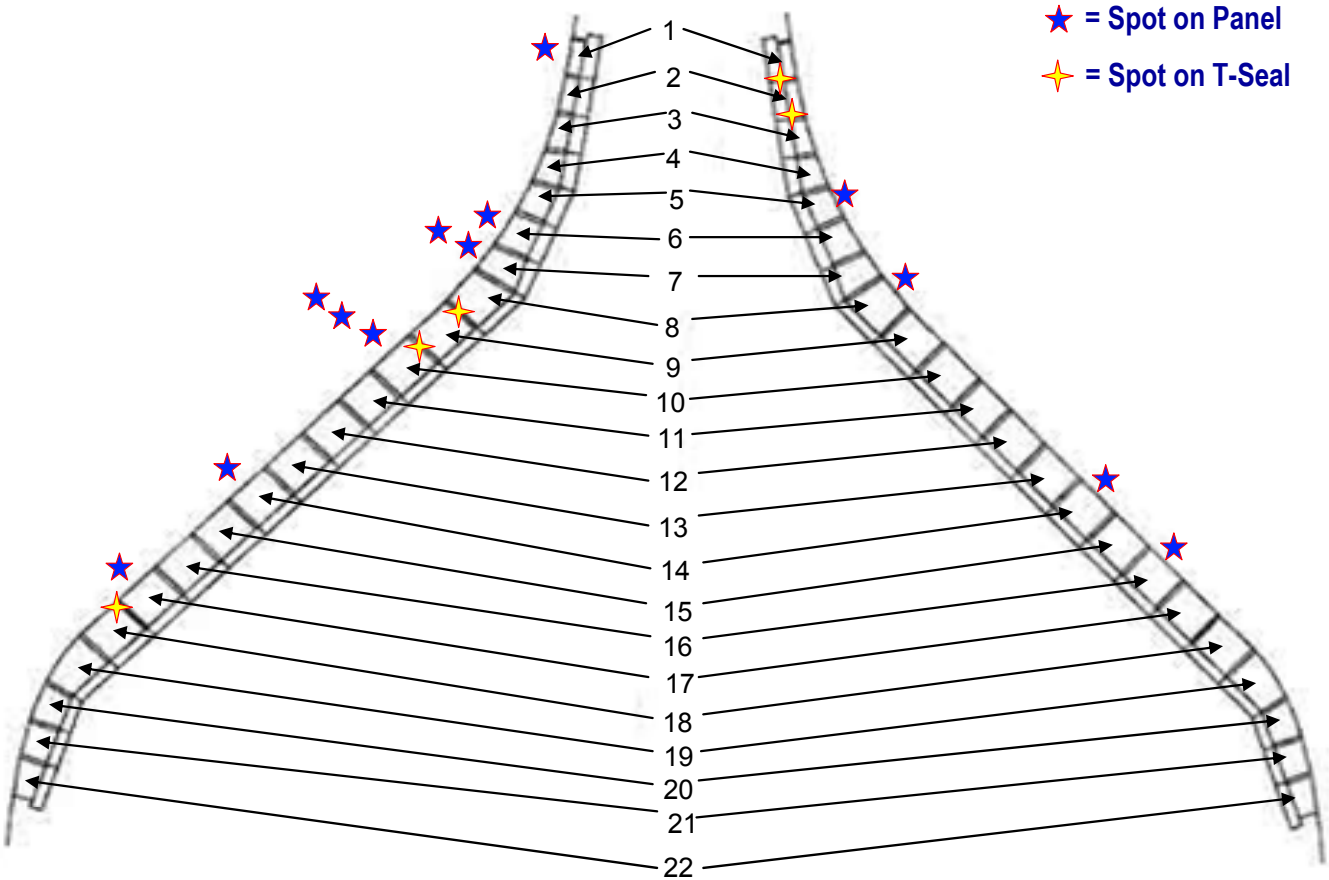

# Current Status: Focused Inspection Locations

| Presenter | M. Gordon | | |
|---|---|---|---|
| Date | July 31, 2005 | Page | 4 |

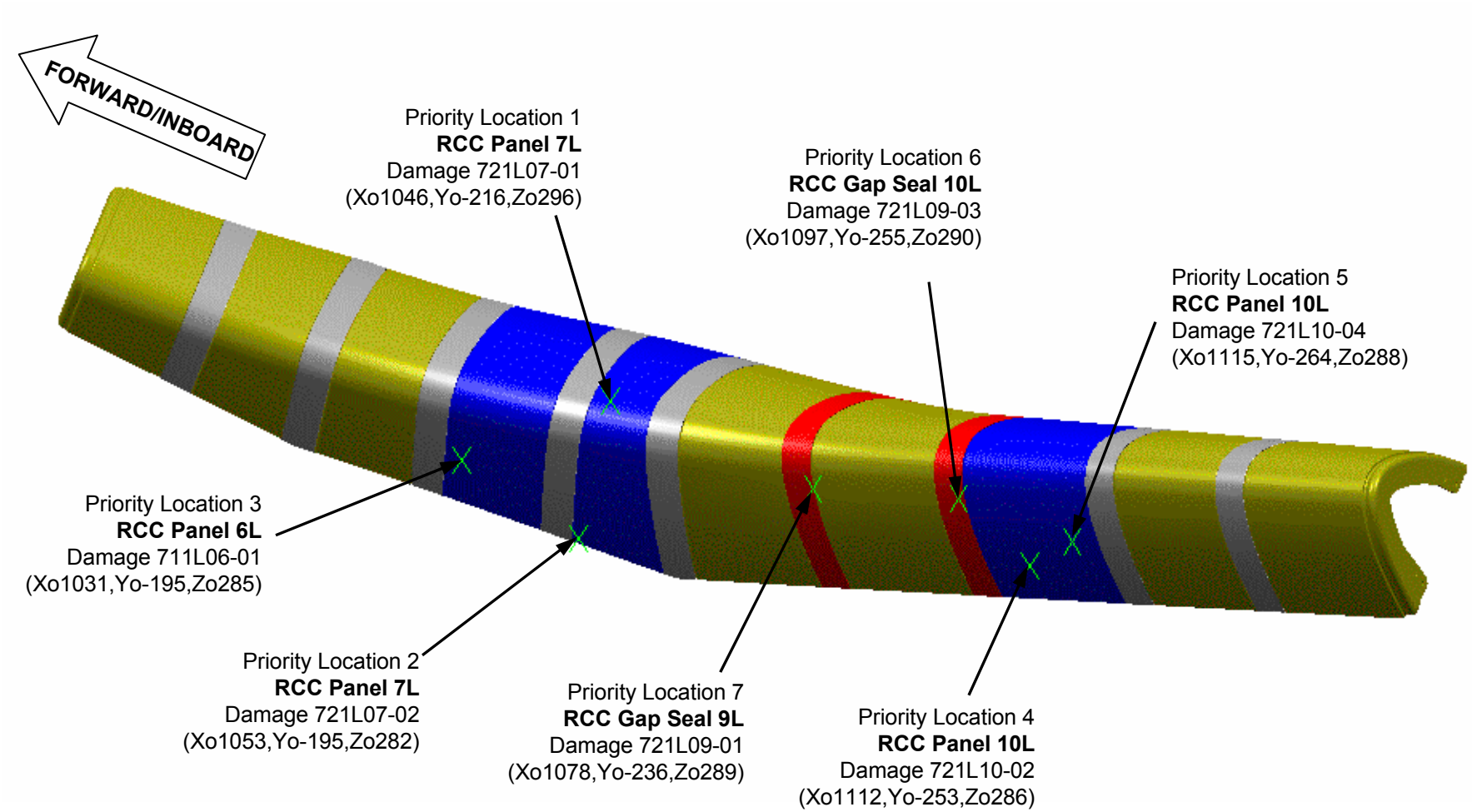

# Current Status: Focused Inspection Results



| Priority Location | Location ID | Sensor | Status | Comments | RCC Assessment |
|---|---|---|---|---|---|
| Location 1 Panel 7L Apex | 721L07-01 | ITVC | Done | Good view | No SiC Damage Detected |
| | | LDRI | Done | No range signature | |
| | | LCS1 | | Missed target | |
| | | LCS2 | | Missed target | |
| | | LCS3 | | Missed target | |
| Location 2 Panel 7L Lower | 721L07-02 | ITVC | Done | Good view in analog | No SiC Damage Detected |
| | | LCS1 | | Inconclusive range signature | |
| | | LCS2 | | Inconclusive range signature | |
| | | LCS3 | | Scan not collected | |
| Location 3 Panel 6L | 711L06-01 | ITVC | Done | Poor focus | No SiC Damage Detected |
| | | LDRI | In work | Crew requested LDRI take... | |
| | | LCS1 | | Inconclusive range signature | |
| | | LCS2 | | Inconclusive range signature | |
| | | LCS3 | | Inconclusive range signature | |
| | | LCS4 | | Inconclusive range signature | |
| | | LCS5 | | | |
| | | LCS6 | | | |
| | | LCS7 | | | |
| | | LCS8 | | | |
| Location 4 Panel 10L | 721L10-02 | ITVC | Done | Best look of all - However, Images evaluated missed AOI | Pending |
| Location 5 Panel 10L | 721L10-04 | ITVC | Done | Quality Looks good | No SiC Damage Detected |
| Location 6 Gap Seal 10L | 721L09-03 | ITVC | Done | Out of focus, crew zoomed in on wrong feature, left area before redirection | No SiC Damage Real Time |
| Location 7 Gap Seal 9L | 721L09-01 | ITVC | Suspect data is in analog feed, still waiting for data | Panned Past Site - Did not stop | No SiC Damage Real Time |

# Forward Plan



- **Black spots appear to be superficial deposits on the surface – No silicon carbide damage is apparent**

- **Missing images from Priority Location 3 (Panel 10L) need to be captured from ITVC video**
  - **Level 2 LDRI scanning from FD2 survey did not indicate major concern**
  - **Real-time review of zoomed-out images did not indicate any damage; however, the still images will be captured**

MSG 065A - FD07 WATER ACTIVITY SUMMARY

For the H2O activities on CDR:

There are three potable CWC fills scheduled for today. Use three empty CWCs located in the middeck from among those with the following S/Ns: 1052, 1055, 1057, 1058, 1060, 1061, 1063, 1067. (Again, note that some of these bags already have cracks at their fittings, but they have passed preflight pressure decay testing.)

The additives for all three of today's fills are both minerals and Silver biocide, and each fill is expected to take approximately 56 minutes.

Perform the first fill at 5/18:20 using CWC FILL in SHUTTLE/ISS H2O CONTAINER FILL (ORB OPS,ECLS), p. 5–26. When this first fill is complete, continue with the second and third fills. A sample is required from the second fill, and this sample should be stowed in MF43E.

Following completion of the second CWC fill, Silver Biocide Syringe Kit S/N 1003 should be empty; stow it in MPLM MPLP2_A1 for return, and use the syringes in Silver Biocide Syringe Kit S/N 1001 for all subsequent CWC fills. (Silver Biocide Syringe Kit S/N 1001 was previously transferred to the Middeck.)

Following each fill, squeeze the CWC and inspect the outer canvas cover and all fittings for cracks and leaks; report each bag's condition to MCC along with its S/N and Barcode. When all fills are complete, the CWCs should be transferred to ISS; report the stowage location(s) to MCC.