STS-LAST
Hardware Retention Proposals

Data provided by JSC – EA, WSTF, and NESC

EP/Energy Systems Division

STS-LAST Hardware Retention Proposal

Quad Charts

EA Shuttle Hardware Retention Effort post STS-LAST		
	Jones/Hernandez	7-8-10

Top List from EP (Note: there are many more items which are included in the comprehensive Excel spreadsheet kept by EA4)

Criteria 1: Knowledge Capture

1. LH2 Feedline/Flowliner System and BSTRA
2. Electrical Connectors & Wire Harnesses
3. OMS/RCS Helium Iso Valves
4. MPS/2 Reg Panels from OV-105
5. PRSD Tanks and Fuel Cell Single Cell Monitoring System (FCMS)
6. MPS Flow Control Valves (FCVs)
7. Elevon (OV-104 Right Inboard or OV-104 Right Outboard)
8. APU Diaphragm Tanks
9. APU Iso Valves – never inspected
10. Power Contactors – from Power Control Assy (PCA)
11. Rudder/Speedbrake Actuator (OV-104 #1 or #2)
12. Water Spray Boiler Heat Exchanger Container
13. RCS Helium Quad Checkvalves

Criteria 2: Future Usage

1. All Pyrotechnic hardware.
2. RCS Thrusters (Primary and Verniers – only spares)
3. ~~MPS Helium Propellant Management System Hardware~~
4. OMS/RCS Helium Regulators
5. APU's
6. MPS LO2 Feedlines
7. OMS Engine
8. TVC Actuators
9. Fuel Cells (Vehicle + spares)

EA Shuttle Hardware Retention Effort post STS-LAST		
	Jones/Hernandez	7-8-10

EP List for <u>Educational Items</u>: (Note: Unless specified, hardware can be from any vehicle or spares)

Purpose of hardware: design aids, visual reference aids, outreach support, etc.

- **MPS**:
  - 17.3 ft^3 COPV
  - Mated pair of T-0 disconnects: 1" GHe, two 1.5" bleed (LO/LH), two 8" fill/drain (LO/LH) 12" Prevalves 1.5" Ball Valve
  - 2 way solenoid valve
  - 3 way solenoid valve
  - 1" Orb/Ground QD both sides
  - 2" and 4" QD both sides
  - 8" QD both sides
- **APU/Hydraulics/MFC:**
  - 1 APU Fuel Isolation Valve
  - 1 APU GN2 Air Half Coupling, 1 Fuel Air Half Coupling
  - 1 APU Catch Bottle, including Manual Drain Valve, Relief Valve, Burst Disc
  - 1 spare Hydraulic Filter Module
  - 1 Hydraulic Thrust Vector Control (TVC) Isolation Valve
  - Hydraulic ET Umbilical Retract Actuator – 1 spare.
- **OMS/RCS:**
- **Fuel Cell/PRSD**
- **Wiring/EPDC**

Orbiter/Shuttle H/W Retention and Inspection Proposals after End of Shuttle Program (STS-LAST)

DCE/NSE/DIV: Jones/Rohloff/EP PRT: Pyro DIVISION PRIORITY NO: 1

HARDWARE / ACTION DESCRIPTION:

- **Pyrotechnic Hardware** (includes: Pressure Cartridges, Cutters, Bolts, Nuts, Boosters, Guillotines, Initiators, Thrusters, Retractors, Delays, Detonating Cords, & Severance Assemblies)
  - Transfer all flight and spare Orbiter Pyrotechnic hardware to JSC.
  - Provide all Hardware Data Packages.

JSC-ENGINEERING COSTS / IMPACTS:

	LOW	MED	HIGH
VEHICLE ACTION COSTS:	X*		
ESTIMATED TRANSPORTATION COSTS:	X		
ESTIMATED ANNUAL MAINTENANCE COSTS:	X		
ESTIMATED STORAGE VOLUME REQ'D:		X	

*Covered under T&R (ESSRD)

Criteria 1 – Hardware / vehicle structure that should be inspected or analyzed given its significant benefit for increasing/advancing the understanding of space hardware environment.
Criteria 2 - Hardware needed in support of a future space vehicle architecture (including hardware that can be used for subsystem development and/or Qual testing); or hardware with remaining life that could be incorporated into EA sponsored flight/test systems. .

ACTION / TRANSPORTATION / STORAGE REQMTS / FUTURE SUPPORT:

- Action: Hardware removal from all 3 vehicles is covered under the current T&R plan. No additional removal action required.
  - Difficulty of H/W Removal: Not applicable.
  - R&R Follow-on Actions: None.
  - Vehicle Invasive Inspections Required: None
  - Specialized Expertise (KSC): KSC Logistics support for preparing items for transportation from KSC to JSC.
  - Specialized Controls: Standard Pyro handling.
- Transportation: Ground transportation from KSC to JSC.
- Storage (JSC): Bond/Controlled Storage at JSC ESTA. No environmental control.
- Future Support (JSC):
  - EP – Testing as needed for future programs.

JUSTIFICATION FOR ACTION – CRITERIA 1,2 :

- NSIs are the required initiator for NASA manned vehicles. Various organizations (JPL, NRL, etc.) also rely on JSC provided initiators for their un-manned programs. While JSC has always directed all internal and external initiator transfers, storage of flight initiators has been at KSC. Storage must now be transferred to JSC.
- Flown hardware is invaluable for verifying pyrotechnic age life predictions and resilience to space environment exposure via functional testing of the hardware.

Note: Justification continues on pg 2.

Orbiter/Shuttle H/W Retention and Inspection Proposals after End of Shuttle Program (STS-LAST)

DCE/NSE/DIV: Jones/Rohloff/EP PRT: Pyro DIVISION PRIORITY NO: 1

HARDWARE/ACTION: **Pyrotechnic Hardware – Transfer to JSC**

JUSTIFICATION (continued):

- Existing spare hardware can be used in flight devices on existing or future vehicle flight vehicles. (As an example the SpaceX Falcon launch vehicle uses a copy of our 3/4 frangible nut and NASA Standard Detonator.)
- Existing spare hardware would be useful for future vehicle development, qualification, and issue troubleshooting.
    - Expanded environmental (shock, vibe, thermal) testing can be conducted to increase our knowledge on the actual capabilities of these and similar devices.
    - Having a supply of various pyrotechnic devices permits rapid troubleshooting for issues as they arise.
    - Having a supply of various pyrotechnic devices allows side by side comparison testing to be conducted for new (increased safety, environmentally friendly, …) device designs.

SCHEMATIC:

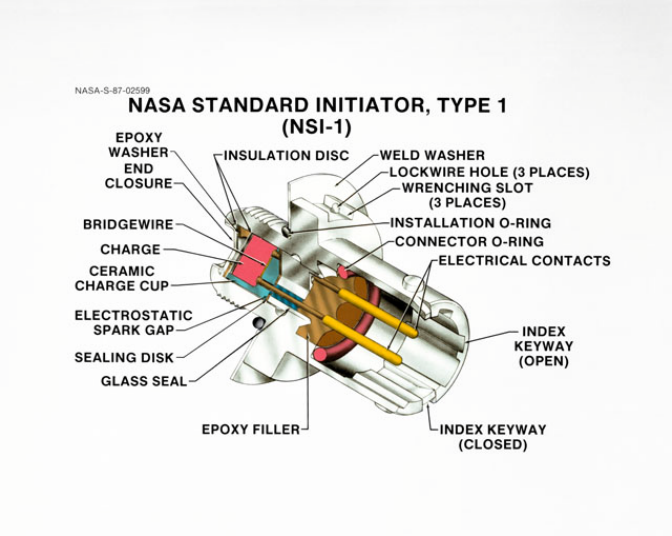

Orbiter/Shuttle H/W Retention and Inspection Proposals after End of Shuttle Program (STS-LAST)

DCE/DIV: Jones/Martinez/EP PRT: MPS DIVISION PRIORITY NO: 1

HARDWARE / ACTION DESCRIPTION:

- **MPS LH2 Feedline**
  - Remove line from OV-103 for future M&P & EP disassembly and examination.
  - Includes Flowliner and BSTRA
  - Provide all Hardware Data Packages.

JSC-ENGINEERING COSTS / IMPACTS:

	LOW	MED	HIGH
VEHICLE ACTION COSTS:		X	
ESTIMATED TRANSPORTATION COSTS:		X	
ESTIMATED ANNUAL MAINTENANCE COSTS:		X	
ESTIMATED STORAGE VOLUME REQ'D:			X

Criteria 1 – Hardware / vehicle structure that should be inspected or analyzed given its significant benefit for increasing/advancing the understanding of space hardware environment.
Criteria 2 - Hardware needed in support of a future space vehicle architecture (including hardware that can be used for subsystem development and/or Qual testing); or hardware with remaining life that could be incorporated into EA sponsored flight/test systems. .

ACTION / TRANSPORTATION / STORAGE REQMTS / FUTURE SUPPORT:

- Action: Hardware removal from vehicle OV-XXX
- Vehicle Invasive Inspections Required: None
- Specialized Expertise (KSC): Requires KSC tech support for R&R and KSC Logistics support storage/transportation to JSC
- Specialized Controls: Feedlines will need to be evacuated to a vacuum or filled with an inert gas for storage.
- Transportation: Grd transportation to JSC
- Storage (JSC): Bond/Controlled Storage. No environmental control.
- Future Support (JSC):
  - JSC-M&P – NDE, valves disassembly, component inspections, documentation, etc.
  - EP – Valve expertise, disassembly, documentation, etc.

JUSTIFICATION FOR ACTION – CRITERIA 1 :

- The LH2 Vacuum Jacketed feedline has flown since the original build. This feedline will contain the LH2 flowliner and the BSTRA balls.
- Flowliner and BSTRA have been known areas of concern for the MPS system with years of troubleshooting for know issues. Removal and inspection will allow verification of analysis performed to build flight rationale.
- VJ lines have proven very durable and saving one for further study can be a powerful learning tool for future systems
- Replacement would be very expensive, and have lead times in excess of 18 months.
- Good asset to test the efficiency of VJ lines

Orbiter/Shuttle H/W Retention and Inspection Proposals after End of Shuttle Program (STS-LAST)

DCE/NSE/DIV: Jones/Martinez/ES PRT: MPS DIVISION PRIORITY NO: 1

HARDWARE/ACTION: Remove **LH2 feedline** form OV-103 for future M&P and EP disassembly and examination

JUSTIFICATION (continued):

SCHEMATIC:

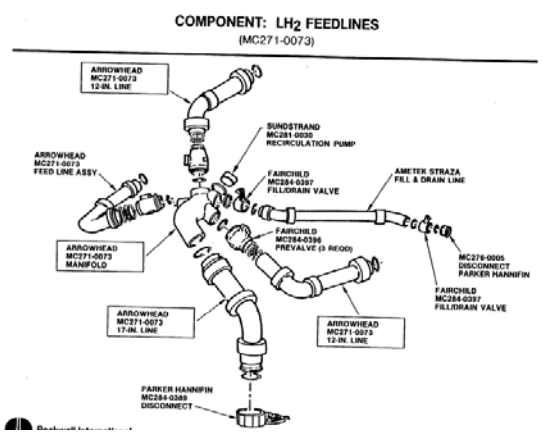

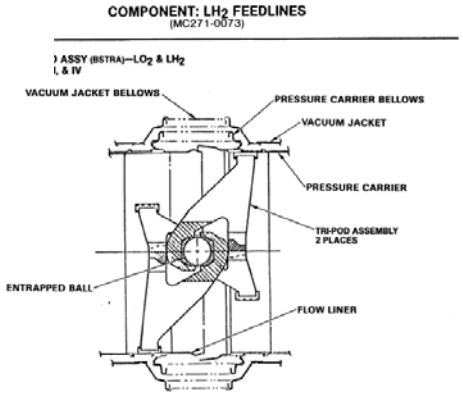

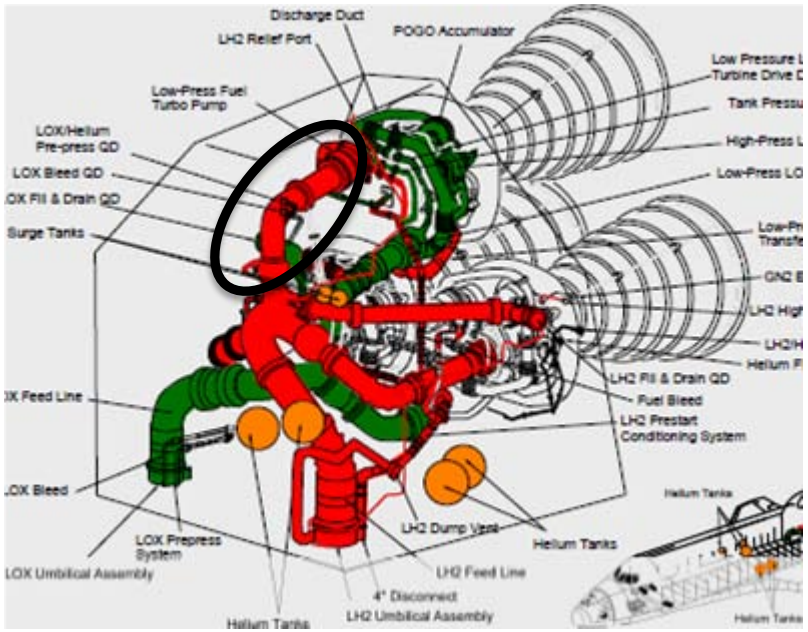

Orbiter/Shuttle H/W Retention and Inspection Proposals after End of Shuttle Program (STS-LAST)

DCE/DIV: Jones/Martinez/EP PRT: MPS DIVISION PRIORITY NO: 4

HARDWARE / ACTION DESCRIPTION:

- **MPS Regulator Panels**
  - Remove from OV-105
  - Includes 1 pneumatic and 1 engine panel, which together includes filter, iso valve, check valve, regulator, relief valve and pressure transducer
  - Provide all Hardware Data Packages.

JSC-ENGINEERING COSTS / IMPACTS:

	LOW	MED	HIGH
VEHICLE ACTION COSTS:		X	
ESTIMATED TRANSPORTATION COSTS:		X	
ESTIMATED ANNUAL MAINTENANCE COSTS:	X		
ESTIMATED STORAGE VOLUME REQ'D:		X	

Criteria 1 – Hardware / vehicle structure that should be inspected or analyzed given its significant benefit for increasing/advancing the understanding of space hardware environment.
Criteria 2 - Hardware needed in support of a future space vehicle architecture (including hardware that can be used for subsystem development and/or Qual testing); or hardware with remaining life that could be incorporated into EA sponsored flight/test systems. .

ACTION / TRANSPORTATION / STORAGE REQMTS / FUTURE SUPPORT:

- Action: Hardware removal from vehicle OV-105
- Vehicle Invasive Inspections Required: None
- Specialized Expertise (KSC): Requires KSC tech support for R&R and KSC Logistics support storage/transportation to JSC
- Specialized Controls: None
- Transportation: Grd transportation to JSC
- Storage (JSC): Bond/Controlled Storage. No environmental control.
- Future Support (JSC):
  - JSC-M&P – NDE, valves disassembly, component inspections, documentation, etc.
  - EP – Valve expertise, disassembly, documentation, etc.

JUSTIFICATION FOR ACTION – CRITERIA 1 :

- Reg panels contain hardware that has flown for an extended period of time and contain a set of useful hardware that could be used for testing and evaluation
- Soft good evaluation may provide useful data for the Orbiter Age Life Handbook.
- Some hardware such as the filters have never been examined for the life of the program
- Panel may be useful for testing purposes

Orbiter/Shuttle H/W Retention and Inspection Proposals after End of Shuttle Program (STS-LAST)

DCE/NSE/DIV: Jones/Martinez/EP PRT: MPS DIVISION PRIORITY NO: 4

HARDWARE/ACTION: Remove **MPS Regulator panel** from OV-105 and keep all valves for analysis and testing

JUSTIFICATION (continued):

SCHEMATIC: MPS REG Panels Removed from OV-105

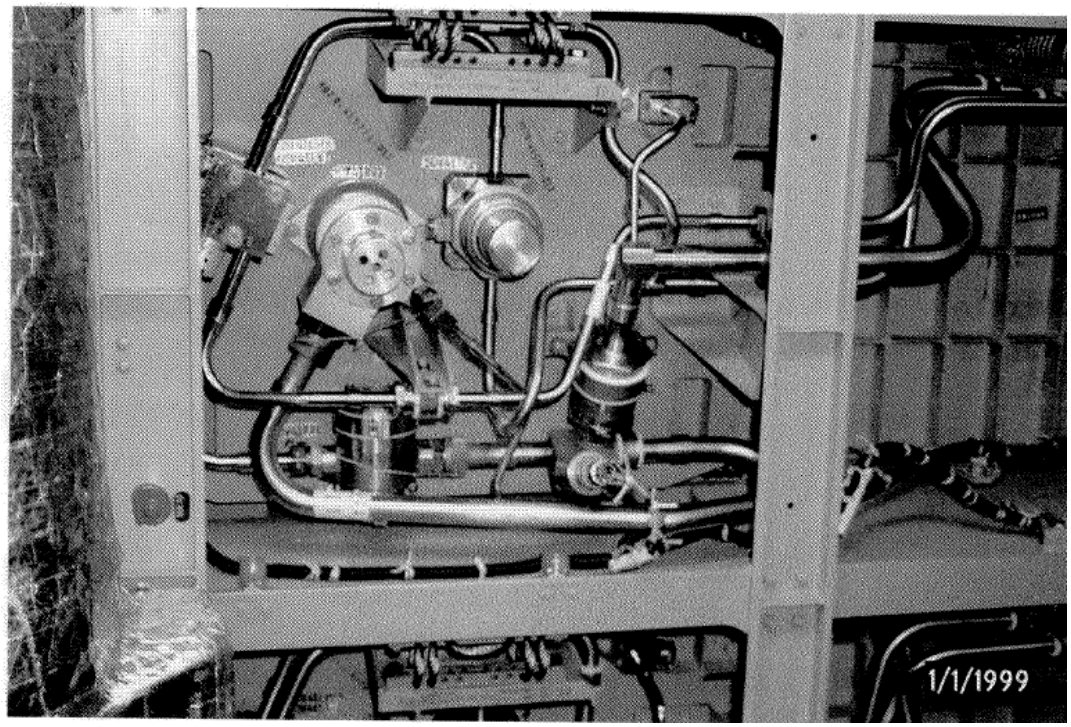

Orbiter/Shuttle H/W Retention and Inspection Proposals after End of Shuttle Program (STS-LAST)

DCE/DIV: Jones/Martinez/EP PRT: MPS DIVISION PRIORITY NO: 6

HARDWARE / ACTION DESCRIPTION:

- **MPS GH2 Flow Control Valves**
  - S/N: 0057
  - S/N: 0051
  - S/N: 0050
  - S/N: 0022
- MPS GH2 Flow Control Valves from newer build date
- Provide all Hardware Data Packages.

JSC-ENGINEERING COSTS / IMPACTS:

	LOW	MED	HIGH
VEHICLE ACTION COSTS:	X		
ESTIMATED TRANSPORTATION COSTS:	X		
ESTIMATED ANNUAL MAINTENANCE COSTS:	X		
ESTIMATED STORAGE VOLUME REQ'D:	X		

Criteria 1 – Hardware / vehicle structure that should be inspected or analyzed given its significant benefit for increasing/advancing the understanding of space hardware environment.
Criteria 2 - Hardware needed in support of a future space vehicle architecture (including hardware that can be used for subsystem development and/or Qual testing); or hardware with remaining life that could be incorporated into EA sponsored flight/test systems. .

ACTION / TRANSPORTATION / STORAGE REQMTS / FUTURE SUPPORT:

- Action: Collect most experienced poppets and at least one new build
- Vehicle Invasive Inspections Required: None
- Specialized Expertise (KSC): Requires KSC tech support for R&R and KSC Logistics support storage/transportation to JSC
- Specialized Controls: None
- Transportation: Grd transportation to JSC
- Storage (JSC): Bond/Controlled Storage. No environmental control.
- Future Support (JSC):
  - JSC-M&P – NDE, valve disassembly, component inspections, documentation, etc.
  - EP – Valve expertise, disassembly, documentation, etc.

JUSTIFICATION FOR ACTION – CRITERIA 1 :

- GH2 FCV's have been a heavily studied piece of hardware since STS-126 where one failed in flight. The failure mode is still not fully understood. Collecting the oldest and most experienced poppets would allow us to study them and compare them to the most recent build of FCV's.
- Keeping them would allow for additional testing that could contain additional Mission Duty Cycles and sensitivity testing that can be used to refine future ATP's.
- NDE techniques could also be refined and new techniques developed on future hardware failure investigations
- Matched poppet contains labyrinth seals which have experienced chipping and cracking from the manufacturing process. Crack depth NDE could be developed.

Orbiter/Shuttle H/W Retention and Inspection Proposals after End of Shuttle Program (STS-LAST)

DCE/NSE/DIV: Jones/Martinez/EP PRT: MPS DIVISION PRIORITY NO: 6

HARDWARE/ACTION: **MPS GH2 Flow Control Valves** – collect valves with the most flights and at least one new build

JUSTIFICATION (continued):

SCHEMATIC: MPS GH2 Flow Control Valves – collect valves with the most flights and at least one new build

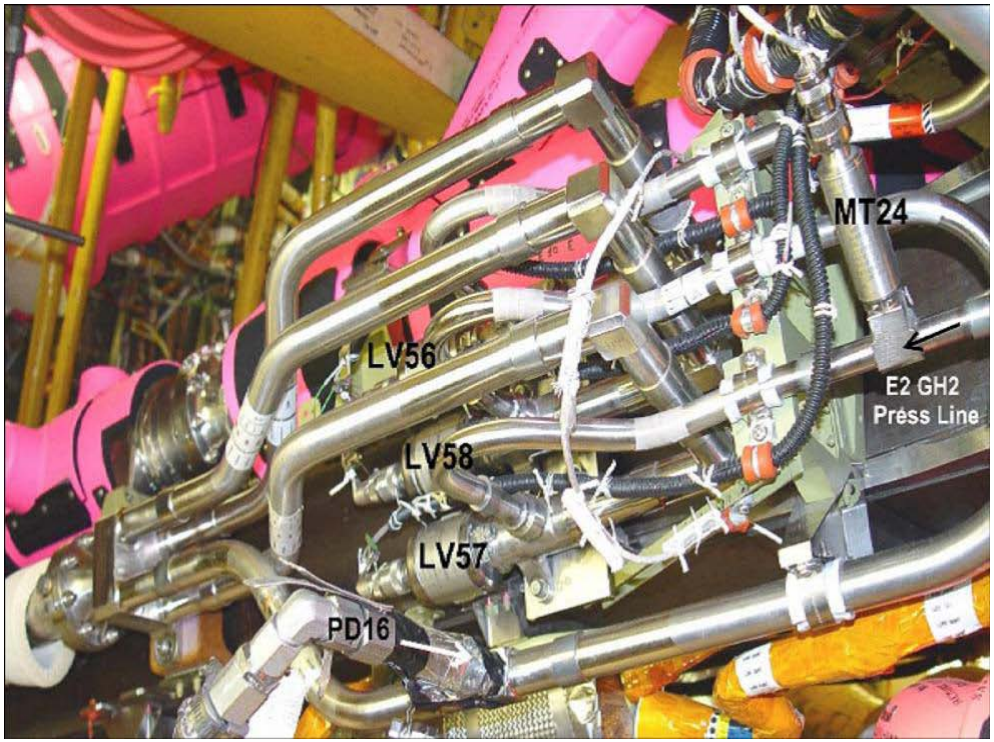

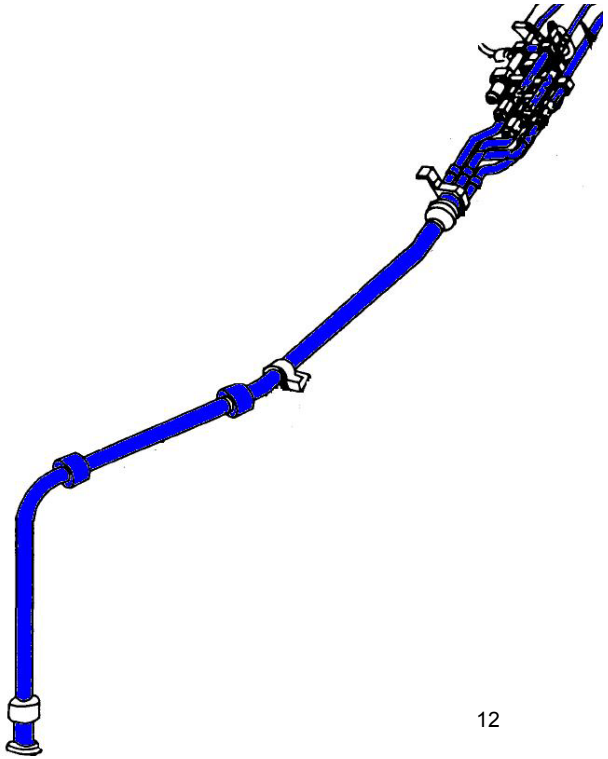

12

Orbiter/Shuttle H/W Retention and Inspection Proposals after End of Shuttle Program (STS-LAST)

DCE/DIV: Jones/Martinez/EP PRT: MPS DIVISION PRIORITY NO: 6

HARDWARE / ACTION DESCRIPTION:

- **MPS LO2 Feedlines**
  - Remove from Vehicle OV-105
  - Ship to JSC Bond/Stores
  - Provide all Hardware Data Packages.

JSC-ENGINEERING COSTS / IMPACTS:

	LOW	MED	HIGH
VEHICLE ACTION COSTS:		X	
ESTIMATED TRANSPORTATION COSTS:		X	
ESTIMATED ANNUAL MAINTENANCE COSTS:	X		
ESTIMATED STORAGE VOLUME REQ'D:			X

Criteria 1 – Hardware / vehicle structure that should be inspected or analyzed given its significant benefit for increasing/advancing the understanding of space hardware environment.
Criteria 2 - Hardware needed in support of a future space vehicle architecture (including hardware that can be used for subsystem development and/or Qual testing); or hardware with remaining life that could be incorporated into EA sponsored flight/test systems. .

ACTION / TRANSPORTATION / STORAGE REQMTS / FUTURE SUPPORT:

- Action: Hardware removal from vehicle OV-XXX
- Vehicle Invasive Inspections Required: None
- Specialized Expertise (KSC): Requires KSC tech support for R&R and KSC Logistics support storage/transportation to JSC
- Specialized Controls: None
- Transportation: Grd transportation to JSC
- Storage (JSC): Bond/Controlled Storage. No environmental control.
- Future Support (JSC):
  - JSC-M&P – NDE, valve disassembly, component inspections, documentation, etc.
  - EP – Valve expertise, disassembly, documentation, etc.

JUSTIFICATION FOR ACTION – CRITERIA 2 :

- LO2 feedlines have flown for an extended period of time
  - 100% inspection would prove useful and these lines could be used in the future to support testing/mockups
  - Replacement would be very expensive, and have lead times in excess of 18 months.
  - Foam properties could be further tested and understood
  - Could serve as a baseline for future foam comparisons

Orbiter/Shuttle H/W Retention and Inspection Proposals after End of Shuttle Program (STS-LAST)

DCE/NSE/DIV: Jones/Martinez/EP PRT: MPS DIVISION PRIORITY NO: 6

HARDWARE/ACTION: Remove LO2 feedlines from OV-105

JUSTIFICATION (continued):

SCHEMATIC:

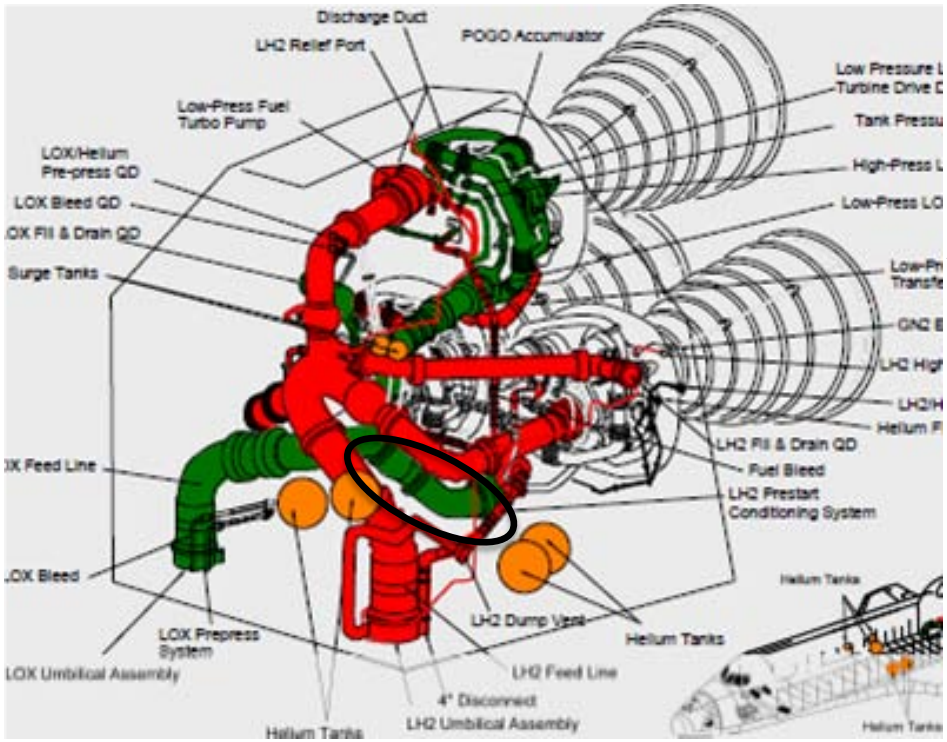

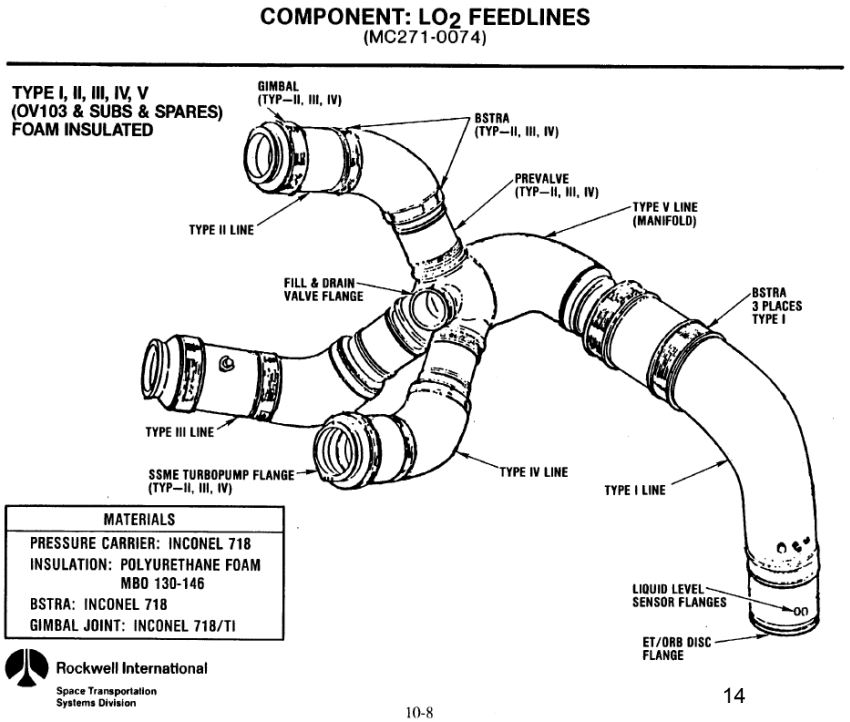

Orbiter/Shuttle H/W Retention and Inspection Proposals after End of Shuttle Program (STS-LAST)

DCE/NSE/DIV: Jones/Plaisance/EP PRT: EW&I DIVISION PRIORITY NO: 2

HARDWARE / ACTION DESCRIPTION:

- **Electrical Wire Harness and Connectors**
  - Remove six (6) electrical wire harnesses and six (6) feed-through connectors from OV-103 for future M&P & EP disassembly and examination.
  - Provide all Hardware Data Packages.

JSC-ENGINEERING COSTS / IMPACTS:

	LOW	MED	HIGH
VEHICLE ACTION COSTS:		X	
ESTIMATED TRANSPORTATION COSTS:	X		
ESTIMATED ANNUAL MAINTENANCE COSTS:	X		
ESTIMATED STORAGE VOLUME REQ'D:	X		

Criteria 1 – Hardware / vehicle structure that should be inspected or analyzed given its significant benefit for increasing/advancing the understanding of space hardware environment.
Criteria 2 - Hardware needed in support of a future space vehicle architecture (including hardware that can be used for subsystem development and/or Qual testing); or hardware with remaining life that could be incorporated into EA sponsored flight/test systems. .

ACTION / TRANSPORTATION / STORAGE REQMTS / FUTURE SUPPORT:

- Action: Hardware removal from vehicle
  - Difficulty of H/W Removal: Low difficulty – no special access required beyond normal OPF procedures
  - R&R Follow-on Actions: None, after last flight, the Vehicle will become non-functional therefore the removed harnesses will have no effect.
  - Vehicle Invasive Inspections Required: None
  - Specialized Expertise (KSC): Requires KSC tech support for R&R and KSC Logistics support for transportation from KSC to JSC.
  - Specialized Controls: Extreme care must be taken to not damage harness during removal
- Transportation: Grd transportation from KSC to JSC
- Storage (JSC): Bond/Controlled Storage. No environmental control.
- Future Support (JSC): M&P Support for material degradation studies
  - KSC Support: See justification section.

JUSTIFICATION FOR ACTION – CRITERIA 1 :

- Removal of oldest original build harnesses from the fwd, mid and aft compartments that have had a variety of repairs performed to (working with KSC OEL to identify best candidate connectors and harnesses):
  - Validate the Category I and Category II inspection philosophies.
  - Validate assumptions that damage resides mostly in the outer perimeter of harness.
  - Inspection of repairs to evaluate validity of repair techniques.
  - Identification of any material degradation.
  - Evaluate effects to material composition related to environments within the various Orbiter compartments

Note: Justification continues on pg 2 if required.

Orbiter/Shuttle H/W Retention and Inspection Proposals after End of Shuttle Program (STS-LAST)

DCE/NSE/DIV: Jones/Plaisance/EP PRT: EW&I DIVISION PRIORITY NO: 2

HARDWARE/ACTION: **Electrical Wiring – Removal of six feed-through connectors and harnesses for evaluation**

JUSTIFICATION (continued):

- Removal of oldest original installation of feed through connectors for material degradation studies.
- Assistance from NASA KSC OEL and Quality Inspectors familiar with inspection criteria and technique would be extremely beneficial in validating the Category I and Category II inspections.

SCHEMATIC:

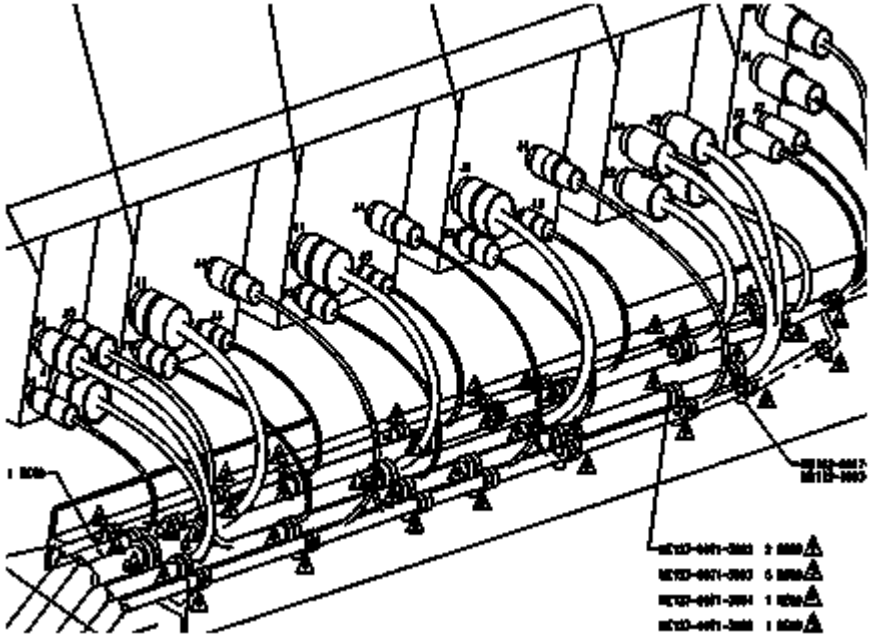

Typical Wire Harness Installation

Orbiter/Shuttle H/W Retention and Inspection Proposals after End of Shuttle Program (STS-LAST)

DCE/NSE/DIV: Jones/Plaisance/EP PRT: EPD&CC DIVISION PRIORITY NO: 9

HARDWARE / ACTION DESCRIPTION:

- **Power Contactors**
- Removal of FPCA 2 & 3 from OV-104 and FPCA 1 from OV-105
  - Remove four General Purpose Power Contactors each from three FPCAs for silver leaf contact M&P analysis
- Provide all Hardware Data Packages.

JSC-ENGINEERING COSTS / IMPACTS:

	LOW	MED	HIGH
VEHICLE ACTION COSTS:		X	
ESTIMATED TRANSPORTATION COSTS:	X		
ESTIMATED ANNUAL MAINTENANCE COSTS:	X		
ESTIMATED STORAGE VOLUME REQ'D:	X		

Criteria 1 – Hardware / vehicle structure that should be inspected or analyzed given its significant benefit for increasing/advancing the understanding of space hardware environment.
Criteria 2 - Hardware needed in support of a future space vehicle architecture (including hardware that can be used for subsystem development and/or Qual testing); or hardware with remaining life that could be incorporated into EA sponsored flight/test systems. .

ACTION / TRANSPORTATION / STORAGE REQMTS / FUTURE SUPPORT:

- Action: Hardware removal from vehicle
  - Difficulty of H/W Removal: Low difficulty – no special access required beyond normal OPF procedures
  - R&R Follow-on Actions: None, after last flight, the Vehicle will become non-functional therefore the removed PCAs will have no effect.
  - Vehicle Invasive Inspections Required: None
  - Specialized Expertise (KSC): Requires KSC tech support for R&R and KSC Logistics support for transportation from KSC to JSC.
  - Specialized Controls: None
- Transportation: Grnd transportation from KSC to JSC
- Storage (JSC): Bond/Controlled Storage. No environmental control.
- Future Support (JSC): M&P analysis details….

JUSTIFICATION FOR ACTION – CRITERIA 1 :

- Removal of the oldest, middle, and youngest General Purpose Power Contactor from the three FPCAs will provide M&P sufficient materials to complete the material study begun after the two contact failures of two power contactors on OV-103
- Also request from Logistics six spare power contactors prior and six post heat treatment change to support the M&P material study

Note: Justification continues on pg 2 if required.

Orbiter/Shuttle H/W Retention and Inspection Proposals after End of Shuttle Program (STS-LAST)

DCE/NSE/DIV: Jones/Plaisance/EP PRT: EPD&C DIVISION PRIORITY NO: 9

HARDWARE/ACTION: **Power Contactors** – Removal of three FPCAs to obtain twelve power contactors for M&P analysis

JUSTIFICATION (continued):

SCHEMATIC:

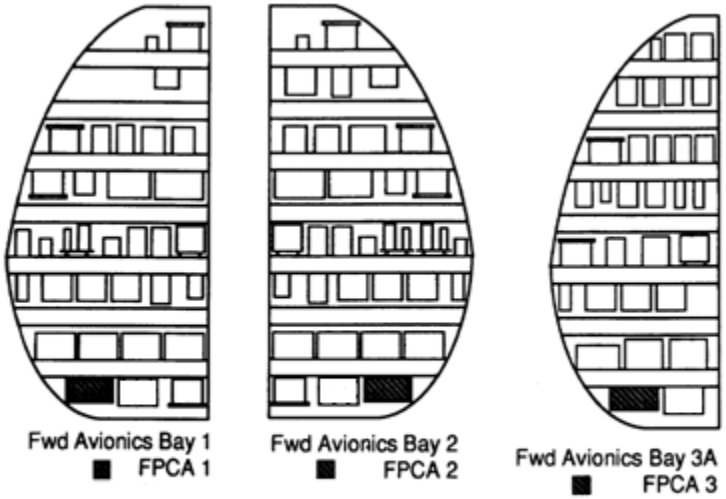

Forward Avionics Bay LRU Locator

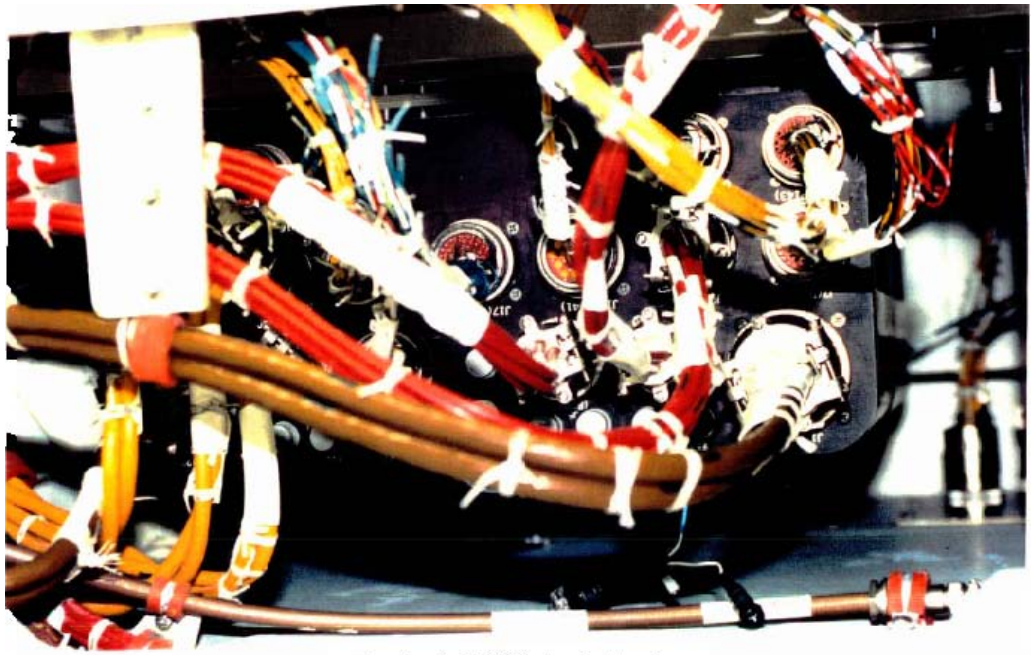

Typical FPCA Installation

Orbiter/Shuttle H/W Retention and Inspection Proposals after End of Shuttle Program (STS-LAST)

DCE/NSE/DIV: Jones/Araghi/EP PRT: FCP/PRSD DIVISION PRIORITY NO: 5

HARDWARE / ACTION DESCRIPTION:

- **Power Reactant Storage & Distributions, PRSD**
  - Remove 2 PRSD tanks with longest accumulated mission time, one Oxygen (S/N TBD, OV-TBD) and on Hydrogen Tank (S/N SHT0002, TK-5, OV-105)
- **Fuel Cell Single Cell Monitoring System, FCMS**
  - Remove 1 FCMS from any Vehicle.
- Provide all Hardware Data Packages.

JSC-ENGINEERING COSTS / IMPACTS:

	LOW	MED	HIGH
VEHICLE ACTION COSTS:		X	
ESTIMATED TRANSPORTATION COSTS:		X	
ESTIMATED ANNUAL MAINTENANCE COSTS:	X		
ESTIMATED STORAGE VOLUME REQ'D:		X	

Criteria 1 – Hardware / vehicle structure that should be inspected or analyzed given its significant benefit for increasing/advancing the understanding of space hardware environment.
Criteria 2 - Hardware needed in support of a future space vehicle architecture (including hardware that can be used for subsystem development and/or Qual testing); or hardware with remaining life that could be incorporated into EA sponsored flight/test systems. .

ACTION / TRANSPORTATION / STORAGE REQMTS / FUTURE SUPPORT:

- Action: Hardware removal and safing from vehicles is covered T&R activities.
- Vehicle Invasive Inspections Required: Standard PRSD tank & FCMS removal. Drainage of PRSD tanks required.
- Specialized Expertise (KSC): Requires KSC tech support for R&R and KSC Logistics support storage/transportation to storage facility (JSC)
- Specialized Controls: Standard container.
- Transportation: Ground transportation to JSC
- Storage (JSC): Bond/Controlled Storage. No environmental control.
- Future Support (JSC):
  - JSC-M&P – NDE, component inspection, documentation.
  - Potential use in future programs (e.g., Shuttle Derived, etc).

JUSTIFICATION FOR ACTION – CRITERIA 1&2 :

- **Removal of oldest PRSD Oxygen & Hydrogen Tanks.**
- Orbiter FCP/PRSD have potential use in future programs.
  - Space rated Cryo tanks are difficult to manufacture with long lead times and very expensive.
- Orbiter PRSD Tanks have the longest age and cycle life flight history for all Cryo storage tanks
  - Inspection data is extremely valuable for other Cryo tanks used in commercial application.
- **Removal of oldest FCMS Box**
- Future use for monitoring the Fuel Cell single cell performance independent of the Fuel Cell Technology.

Note: Justification continues on pg 2 if required.

Orbiter/Shuttle H/W Retention and Inspection Proposals after End of Shuttle Program (STS-LAST)

DCE/NSE/DIV: Jones/Araghi/EP PRT: FCP/PRSD DIVISION PRIORITY NO: 5

HARDWARE/ACTION: **PRSD Tanks & Fuel Cell FCMS Box**

JUSTIFICATION (continued):

- Removal of PRSD Hydrogen (S/N SHT0002, TK-5, OV-105) & Oxygen (SN SXT0006, TK5, OV-103) tanks for future programs consideration & material degradation studies.
- Removal of Fuel Cell Single Cell Monitoring System (FCMS) for future programs considerations. FCMS is essential for monitoring each cell performance.

SCHEMATIC:

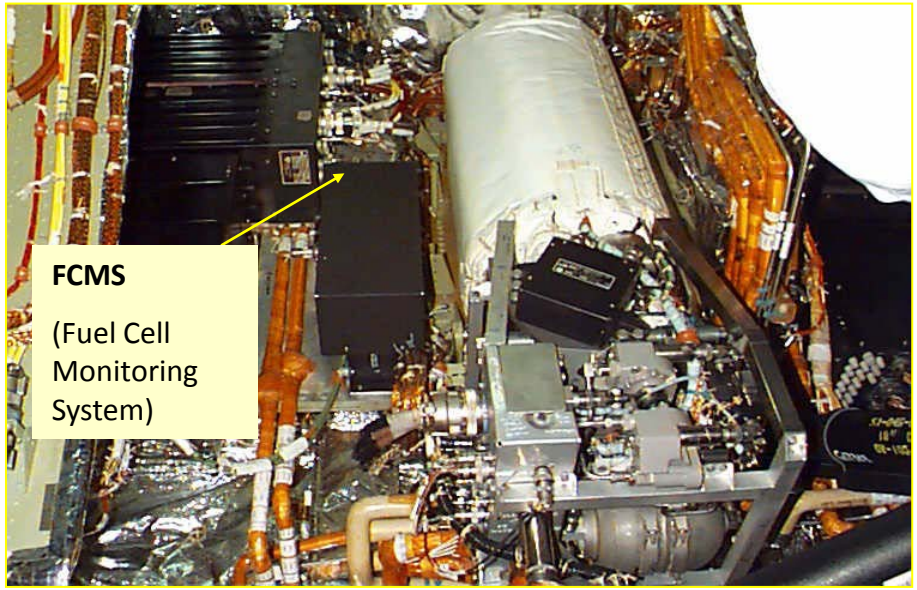

Typical PRSD Tank & FCMS Box

Orbiter/Shuttle H/W Retention and Inspection Proposals after End of Shuttle Program (STS-LAST)

DCE/NSE/DIV: Jones/Hernandez/EP PRT: APU DIVISION PRIORITY NO: 3

HARDWARE / ACTION DESCRIPTION:

- **Orbiter APU Diaphragm Tanks**
  - Remove and decontaminate 3 APU Tanks from each vehicle (covered by T&R activities) – 9 Total
  - Remove 3 APU Water Tanks from each vehicle - 9 Total
  - Transport 9 vehicle APU Tanks, 9 APU Water Tanks plus 2 KSC APU Tank Spares to storage facility (JSC/WSTF).
  - Inspect the Fleet Leader APU Fuel Tanks.
  - Provide all Hardware Data Packages.

JSC-ENGINEERING COSTS / IMPACTS:

	LOW	MED	HIGH
VEHICLE ACTION COSTS:	X*		
ESTIMATED TRANSPORTATION COSTS:		X	
ESTIMATED ANNUAL MAINTENANCE COSTS:	X		
ESTIMATED STORAGE VOLUME REQ'D:			X

*Covered under T&R (ESSRD)

Criteria 1 – Hardware / vehicle structure that should be inspected or analyzed given its significant benefit for increasing/advancing the understanding of space hardware environment.
Criteria 2 - Hardware needed in support of a future space vehicle architecture (including hardware that can be used for subsystem development and/or Qual testing); or hardware with remaining life that could be incorporated into EA sponsored flight/test systems. .

ACTION / TRANSPORTATION / STORAGE REQMTS / FUTURE SUPPORT:

- Action: Hardware removal from vehicle + spares
  - Difficulty of H/W Removal: Hardware removal and safing is covered by T&R activities. Dynatube Fittings.
  - R&R Follow-on Actions: Decontaminate, shipment.
  - Vehicle Invasive Inspections Required: None. Standard Tank removal.
  - Specialized Expertise (KSC): Requires KSC tech support for R&R and KSC Logistics support for transportation from KSC to JSC/WSTF.
  - Specialized Controls: Decontamination covered by T&R.
- Transportation: Standard transportation from KSC to JSC.
- Storage (JSC): Bond/Controlled Storage. No environmental control.
- Future Support (JSC):
  - JSC-M&P and NSE: NDE, overall external inspection, possible dissasembly and inspection of Fleet Leader Tank to look at the tank shell and AF-E-332 diaphragm conditions.

JUSTIFICATION FOR ACTION – CRITERIA 1&2

- Orbiter APU's have potential use in future programs.
  - Diaphragm material (AF-E-332) is no longer manufactured.
  - Tanks are difficult to manufacture with long lead times (>>1 yr).
  - All spacecraft monopropellant hydrazine systems in history have utilized similar type of diaphragm tanks (e.g., Pioneer, Viking, Voyager, IUS, Cassini, etc. Ref: AIAA 95-2534).
- Orbiter APU Tanks have the longest age and cycle life flight history of all hydrazine tanks used, including commercial use.
  - Inspection data is extremely valuable for other hydrazine tanks used in manned and un-manned space applications.

Note: Justification continues on pg 2 if required.

Orbiter/Shuttle H/W Retention and Inspection Proposals after End of Shuttle Program (STS-LAST)

DCE/NSE/DIV: Jones/Hernandez/EP PRT: APU DIVISION PRIORITY NO: 3

HARDWARE/ACTION: Orbiter APU Diaphragm Tanks – R&R and ship Tanks.

JUSTIFICATION (continued):

- A complete detailed inspection will expand the existing historical database by comparing against 2 other tanks previously inspected at 11 yrs and 25 yrs (Note: data is used by Industry. Reference: AIAA 95-2534).
    - Tank shell: Complete visual inspection, hardness testing, thickness measurements, metallographic analysis (conventional, scanning electron microscopy, (SEM)), and electron spectroscopy for chemical analysis (EASCA).
    - Diaphragm: visual inspection, microscopic analysis, thickness measurements, hardness testing, specific gravity, tensile testing, chemical analysis and thermal gravimetric analysis (TGA).
- Quantifying the amount of hydrazine permeation through the diaphragm would provide valuable data for analytical models.

SCHEMATIC:

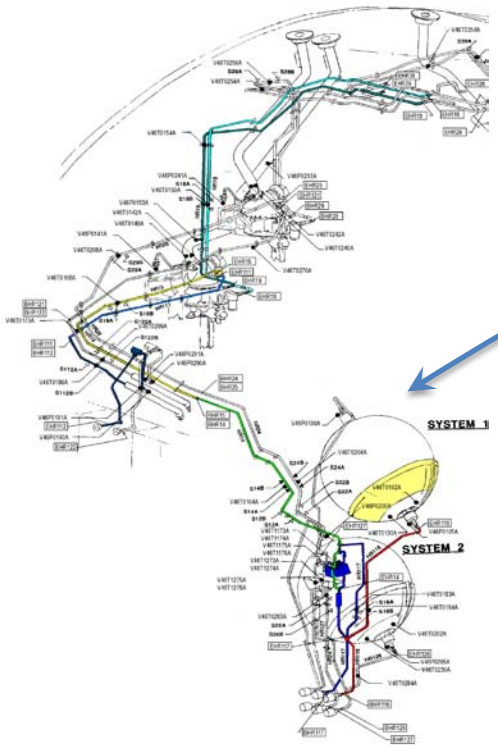

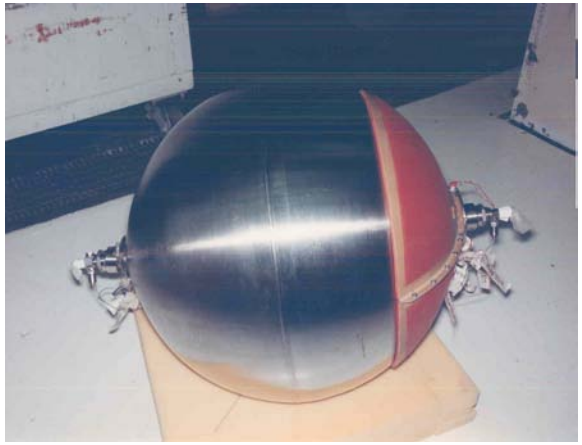

Orbiter/Shuttle H/W Retention and Inspection Proposals after End of Shuttle Program (STS-LAST)

DCE/NSE/DIV: Jones/Hernandez/EP PRT: APU DIVISION PRIORITY NO: 5

HARDWARE / ACTION DESCRIPTION:

- **Orbiter Auxiliary Power Units (APU's)**
  - Remove 3 APU's from each of the 3 vehicles (covered by T&R) and ship to JSC/WSTF.
  - Transport 9 vehicle APU's plus 5 KSC APU spares to JSC/WSTF.
  - Transport to WSTF, all APU's located at Hamilton-Sundstrand (S/N 306, S/N 401, S/N 009 Engineering Test Unit)
  - Provide all Hardware Data Packages.

JSC-ENGINEERING COSTS / IMPACTS:

	LOW	MED	HIGH
VEHICLE ACTION COSTS:	X*		
ESTIMATED TRANSPORTATION COSTS:			X
ESTIMATED ANNUAL MAINTENANCE COSTS:	X		
ESTIMATED STORAGE VOLUME REQ'D:		X	

*Covered under T&R (ESSRD)

Criteria 1 – Hardware / vehicle structure that should be inspected or analyzed given its significant benefit for increasing/advancing the understanding of space hardware environment.
Criteria 2 - Hardware needed in support of a future space vehicle architecture (including hardware that can be used for subsystem development and/or Qual testing); or hardware with remaining life that could be incorporated into EA sponsored flight/test systems. .

ACTION / TRANSPORTATION / STORAGE REQMTS / FUTURE SUPPORT:

- Action: Hardware removal from vehicle
  - Difficulty of H/W Removal: Removal and decontamination are covered by T&R plan (ESSRD).
  - R&R Follow-on Actions: Shipment to JSC/WSTF.
  - Vehicle Invasive Inspections Required: None.
  - Specialized Expertise (KSC): Requires KSC tech support for R&R and KSC Logistics support for transportation from KSC to JSC.
  - Specialized Controls: Decontamination covered by T&R.
- Transportation: Standard transportation from KSC to JSC/WSTF
- Storage (JSC/WSTF): Bond/Controlled Storage. No environmental control.
- Future Support (JSC):
  - JSC-M&P and NSE: External inspection, NDE.

JUSTIFICATION FOR ACTION – CRITERIA 1&2

- APU wet-time limit has been increased over the last few years from 4 yrs to >6.5 yrs in order to allow manifest flexibility
  - No inspections beyond 4.5 yrs wet time have been performed on any flight APU's.
  - Injector Stem is sensitive to nitriding and corrosion.
  - Data helps to validate engineering assessments and wet time flight rationale.
  - Inspection of 1-2 APU's (Wet time Fleet Lead) would be sufficient to provide the needed data.
- Orbiter APU's have potential use in future programs
  - All APU's still have significant life remaining
  - Catalyst (Shell 405) is not longer manufactured.

Note: Justification continues on pg 2 if required.

Orbiter/Shuttle H/W Retention and Inspection Proposals after End of Shuttle Program (STS-LAST)

DCE/NSE/DIV: Jones/Hernandez/EP PRT: APU DIVISION PRIORITY NO: 5

HARDWARE/ACTION: **Orbiter APU's – Remove all vehicle APU's, decontaminate and ship to JSC/WSTF.**

JUSTIFICATION (continued):

SCHEMATIC:

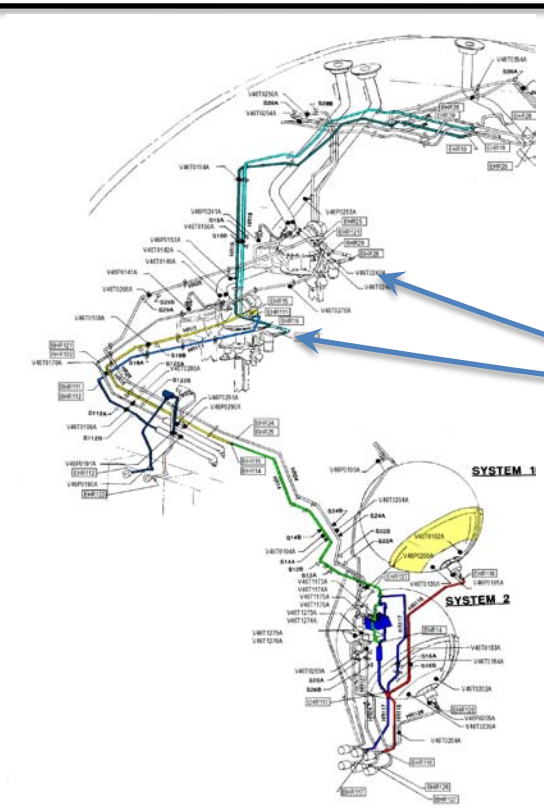

24

Orbiter/Shuttle H/W Retention and Inspection Proposals after End of Shuttle Program (STS-LAST)

DCE/NSE/DIV: Jones/Hernandez/EP PRT: Hydraulics DIVISION PRIORITY NO: 7

HARDWARE / ACTION DESCRIPTION:

- **OV-104 Elevon Actuator**
  - Remove either OV-104 Right Inboard Actuator (S/N 8) OR OV-104 Right Outboard Actuator (S/N 6)
  - In order to avoid aerosurface freefloat, need to re-install spare elevon actuator (S/N 11 Inboard or S/N 5 Outboard).
  - Transport Actuator to storage facility (JSC)
  - Provide all Hardware Data Packages.

JSC-ENGINEERING COSTS / IMPACTS:

	LOW	MED	HIGH
VEHICLE ACTION COSTS: Complexity: High, Task Duration: High			X
ESTIMATED TRANSPORTATION COSTS:		X	
ESTIMATED ANNUAL MAINTENANCE COSTS:	X		
ESTIMATED STORAGE VOLUME REQ'D:		X	

Criteria 1 – Hardware / vehicle structure that should be inspected or analyzed given its significant benefit for increasing/advancing the understanding of space hardware environment.
Criteria 2 - Hardware needed in support of a future space vehicle architecture (including hardware that can be used for subsystem development and/or Qual testing); or hardware with remaining life that could be incorporated into EA sponsored flight/test systems. .

ACTION / TRANSPORTATION / STORAGE REQMTS / FUTURE SUPPORT:

- Action: Hardware removal from vehicle
  - Difficulty of H/W Removal: Medium/High difficulty – standard actuator removal. Provisions needed to hold aerosurface in-place.
  - R&R Follow-on Actions: None.
  - Vehicle Invasive Inspections Required: R&R.
  - Specialized Expertise (KSC): Standard Elevon R&R.
  - Specialized Controls: None.
- Transportation: Standard transportation from KSC to JSC.
- Storage (JSC): Bond/Controlled Storage. No environmental control.
- Future Support (JSC):
  - JSC-NSE: Overall external hardware inspection, documentation.
  - JSC-M&P: Disassembly, removal and inspection of seals to document age life deterioration. Inspection of electrical connectors/harnesses for age deterioration.

JUSTIFICATION FOR ACTION – CRITERIA 1 :

- Both of these OV-104 Elevon actuators have been in service since the beginning of the Program (30+ yrs) with no internal inspections ever performed.
  - Hydraulic seals (Buna-N) provide significant cycle and age life information.
- There are over 800 soft-goods per actuator (o-rings, back-up rings, face seals) which provide very valuable information on aging of hydraulic soft-goods.
  - No other seals within the space and possibly the commercial aircraft sector is likely to have the same exposure life.
  - Orbiter's unique thermal/vacuum environment
  - Could provide needed information for Life Assessment of soft-goods in-service.

Note: Justification continues on pg 2 if required.

Orbiter/Shuttle H/W Retention and Inspection Proposals after End of Shuttle Program (STS-LAST)

DCE/NSE/DIV: Jones/Hernandez/EP PRT: Hydraulics DIVISION PRIORITY NO: 7

HARDWARE/ACTION: **Removal of OV-104 Elevon Actuator and transportation to JSC**

JUSTIFICATION (continued):

- Assessment to include:
  - Observation for cuts, discoloration, extrusion, cracks, swell, shredding, etc.
  - Dimensional Measurements: thickness/cross section, diameter.
  - Changes to the Physical Properties (Measurements to be made in accordance with ASTM Standard D1414.)
    - Harness, Tensile Strength, Compression Set, Swelling, Tensile Elongation, Modulus.

SCHEMATIC:

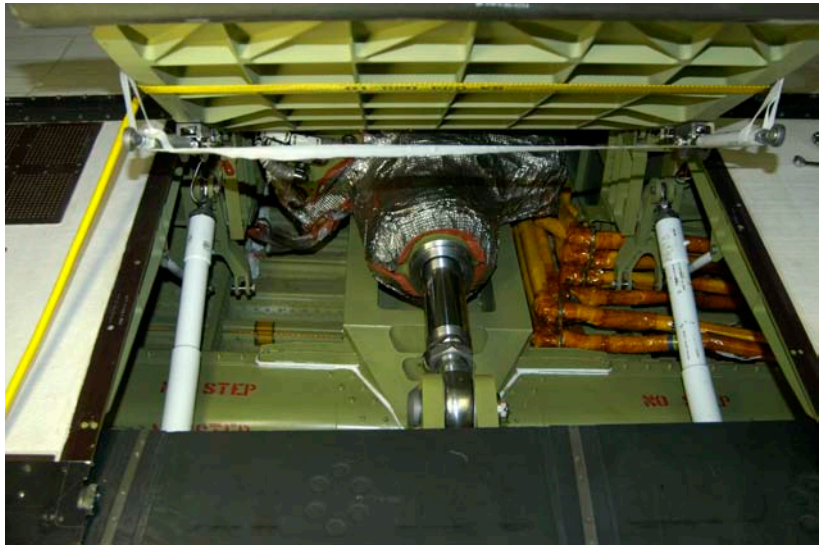

Orbiter/Shuttle H/W Retention and Inspection Proposals after End of Shuttle Program (STS-LAST)

DCE/NSE/DIV: Jones/Hernandez/EP PRT: APU DIVISION PRIORITY NO: 8

HARDWARE / ACTION DESCRIPTION:

- **APU Fuel Isolation Valve**
  - Remove 1 valve from OV-103, APU #1, #2 or #3.
  - Provide all Hardware Data Packages.

JSC-ENGINEERING COSTS / IMPACTS:

	LOW	MED	HIGH
VEHICLE ACTION COSTS:	X*		
ESTIMATED TRANSPORTATION COSTS:	X		
ESTIMATED ANNUAL MAINTENANCE COSTS:	X		
ESTIMATED STORAGE VOLUME REQ'D:	X		

*Covered under T&R (ESSRD)

Criteria 1 – Hardware / vehicle structure that should be inspected or analyzed given its significant benefit for increasing/advancing the understanding of space hardware environment.
Criteria 2 - Hardware needed in support of a future space vehicle architecture (including hardware that can be used for subsystem development and/or Qual testing); or hardware with remaining life that could be incorporated into EA sponsored flight/test systems. .

ACTION / TRANSPORTATION / STORAGE REQMTS / FUTURE SUPPORT:

- Action: Hardware removal from vehicle
  - Difficulty of H/W Removal: Low difficulty – no special access required beyond normal OPF procedures. Dynatube Fittings. Covered by T&R plan (ESSRD).
  - R&R Follow-on Actions: None.
  - Vehicle Invasive Inspections Required: None
  - Specialized Expertise (KSC): Requires KSC tech support for R&R and KSC Logistics support for transportation from KSC to JSC.
  - Specialized Controls: Decontamination covered by T&R.
- Transportation: Standard transportation from KSC to JSC.
- Storage (JSC): Bond/Controlled Storage. No environmental control.
- Future Support (JSC):
  - JSC-M&P and NSE: NDE, valve disassembly, internal inspection of seals (AF-E-411) and sealing surfaces, contamination assessment.

JUSTIFICATION FOR ACTION – CRITERIA 1 :

- MOOG APU Fuel Isolation Valves (FIV) have never been inspected in the history of the Program. Inspection of internal components (softgoods, poppet, sealing surface) provides valuable engineering data for hydrazine systems.
- Similar valves are likely to be used on future monopropellant hydrazine systems.
- Detailed M&P internal inspection to include: Filter Screen (SS 304L), Poppet Seal (Polytetrafluoroethylene), Relief Valve poppet seal (AF-E-411), Nozzle seat (15-5 PH). Inspection to look for contamination, signs of corrosion, cracks, etc.

Note: Justification continues on pg 2 if required.

Orbiter/Shuttle H/W Retention and Inspection Proposals after End of Shuttle Program (STS-LAST)

DCE/NSE/DIV: Jones/Hernandez/EP PRT: APU DIVISION PRIORITY NO: 8

HARDWARE/ACTION: **Orbiter Fuel Isolation Valve – Remove 1 valve from OV-103 from APU #1, #2 or #3.**

JUSTIFICATION (continued):

SCHEMATIC:

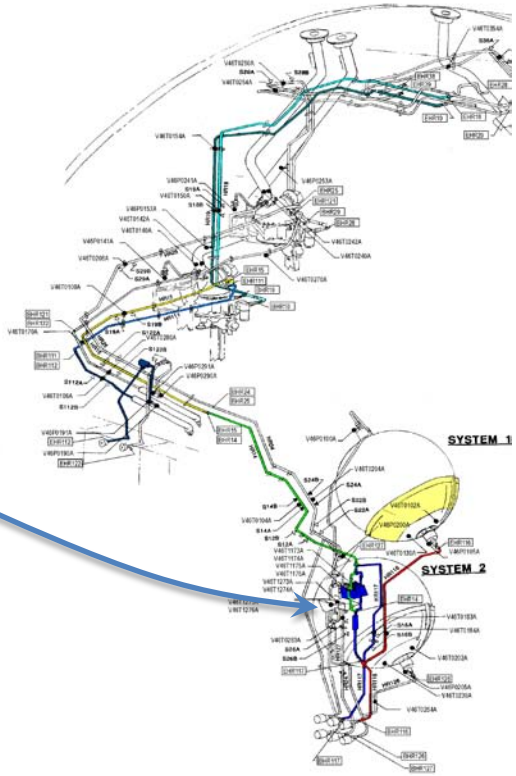

Orbiter/Shuttle H/W Retention and Inspection Proposals after End of Shuttle Program (STS-LAST)

DCE/NSE/DIV: Jones/Hernandez/EP PRT: Hydraulics DIVISION PRIORITY NO: 11

HARDWARE / ACTION DESCRIPTION:

- **Water Spray Heat Exchanger & Container**
  - Remove the Heat Exchanger and Container from 1 WSB (OV-104 WSB #2 S/N 18 – Fleet Leader)
  - Provide all Hardware Data Packages.

JSC-ENGINEERING COSTS / IMPACTS:

	LOW	MED	HIGH
VEHICLE ACTION COSTS:		X	
ESTIMATED TRANSPORTATION COSTS:		X	
ESTIMATED ANNUAL MAINTENANCE COSTS:	X		
ESTIMATED STORAGE VOLUME REQ'D:	X		

Criteria 1 – Hardware / vehicle structure that should be inspected or analyzed given its significant benefit for increasing/advancing the understanding of space hardware environment.
Criteria 2 - Hardware needed in support of a future space vehicle architecture (including hardware that can be used for subsystem development and/or Qual testing); or hardware with remaining life that could be incorporated into EA sponsored flight/test systems. .

ACTION / TRANSPORTATION / STORAGE REQMTS / FUTURE SUPPORT:

- Action: Hardware removal from vehicle
  - Difficulty of H/W Removal: Medium difficulty – no special access required beyond normal OPF procedures. Dynatube Fittings.
  - R&R Follow-on Actions: None.
  - Vehicle Invasive Inspections Required: Standard WSB removal per OMRSD.
  - Specialized Expertise (KSC): Requires KSC tech support for R&R and KSC Logistics support for transportation from KSC to JSC. Removal of Heat Exchanger core from WSB.
  - Specialized Controls: Decontamination covered by T&R.
- Transportation: Standard transportation from KSC to JSC.
- Storage (JSC): Bond/Controlled Storage. No environmental control.
- Future Support (JSC):
  - JSC-M&P and NSE: Inspection of Heat Exchanger Core for signs of accelerated corrosion and/or thermal induced damage.

JUSTIFICATION FOR ACTION – CRITERIA 1 :

- None of the Water Spray Boiler Heat Exchanger Cores have been inspected since the implementation of Propylene Glycol Monomethyl Ether (PGME).
  - The effect of PGME and thermal cycles on material corrosion was never tested as part of the Qualification effort.
  - Both the Container and Heat Exchanger should be examined for any sign of accelerated corrosion due to the PGME boiling (thermal-induced damage).
  - Data is important to validate previous engineering assumptions and support the use of similar heat exchanger fluids and materials in future programs.

Note: Justification continues on pg 2 if required.

Orbiter/Shuttle H/W Retention and Inspection Proposals after End of Shuttle Program (STS-LAST)

DCE/NSE/DIV: Jones/Hernandez/EP PRT: Hydraulics DIVISION PRIORITY NO: 11

HARDWARE/ACTION: **Water Spray Boiler Heat Exchanger/Container**

JUSTIFICATION (continued):

SCHEMATIC:

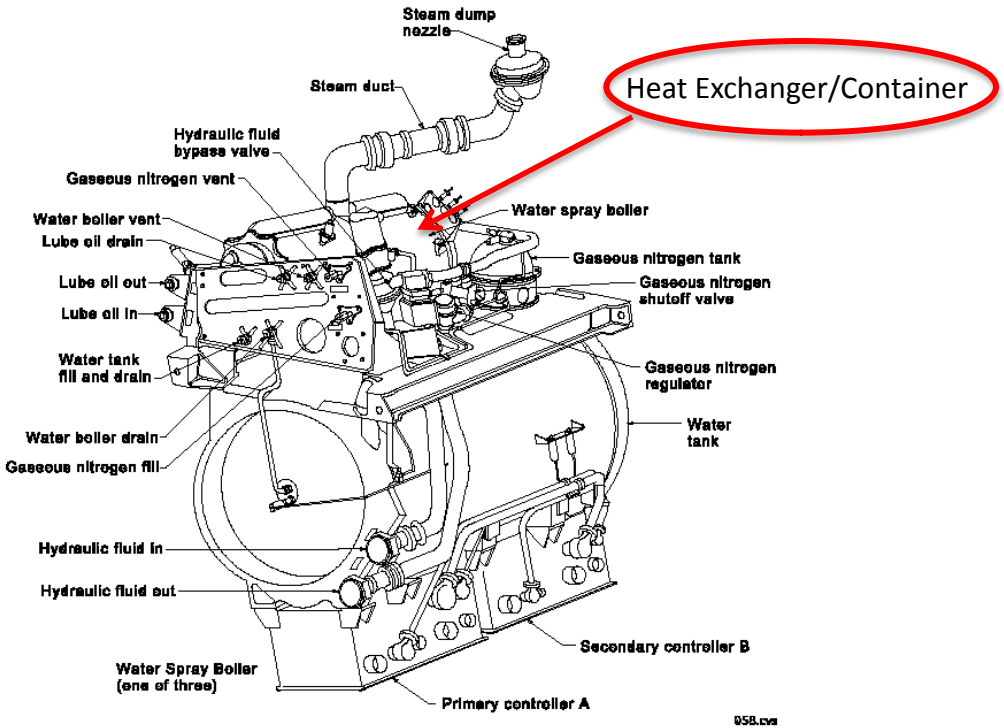

Orbiter/Shuttle H/W Retention and Inspection Proposals after End of Shuttle Program (STS-LAST)

DCE/NSE/DIV: Jones/Hernandez/EP PRT: Hydraulics DIVISION PRIORITY NO: 8

HARDWARE / ACTION DESCRIPTION:

- **Orbiter Thrust Vector Control (TVC) Actuators**
  - Transport 4 spare TVC Actuators from KSC Logistics to storage facility at JSC.
  - Provide all Hardware Data Packages.

JSC-ENGINEERING COSTS / IMPACTS:

	LOW	MED	HIGH
VEHICLE ACTION COSTS:	X		
ESTIMATED TRANSPORTATION COSTS:		X	
ESTIMATED ANNUAL MAINTENANCE COSTS:	X		
ESTIMATED STORAGE VOLUME REQ'D:		X	

Criteria 1 – Hardware / vehicle structure that should be inspected or analyzed given its significant benefit for increasing/advancing the understanding of space hardware environment.
Criteria 2 - Hardware needed in support of a future space vehicle architecture (including hardware that can be used for subsystem development and/or Qual testing); or hardware with remaining life that could be incorporated into EA sponsored flight/test systems. .

ACTION / TRANSPORTATION / STORAGE REQMTS / FUTURE SUPPORT:

- Action: Hardware removal from vehicle
  - Difficulty of H/W Removal: Low difficulty – no special access required beyond normal OPF procedures.
  - R&R Follow-on Actions: None.
  - Vehicle Invasive Inspections Required: None.
  - Specialized Expertise (KSC): None.
  - Specialized Controls: None.
- Transportation: Standard transportation from KSC to JSC.
- Storage (JSC): Bond/Controlled Storage. No environmental control.
- Future Support (JSC):
  - JSC-NSE: Overall external hardware inspection, documentation.
  - Potential use in future programs and testing (e.g., Shuttle Derived, etc).

JUSTIFICATION FOR ACTION – CRITERIA 2 :

- Future programs will likely utilized a similar type of servo-mechanical hydraulic actuator.
- TVC Actuators can serve for flight use and/or testing purposes.
- Manufacturing of TVC Actuators is extremely costly (~2M ea) with a long lead time (>>1 yr).

Note: Justification continues on pg 2 if required.

Orbiter/Shuttle H/W Retention and Inspection Proposals after End of Shuttle Program (STS-LAST)

DCE/NSE/DIV: Jones/Hernandez/EP PRT: Hydraulics DIVISION PRIORITY NO: 8

HARDWARE/ACTION: **Orbiter TVC Actuators – 4 spares**

JUSTIFICATION (continued):

SCHEMATIC:

Orbiter/Shuttle H/W Retention and Inspection Proposals after End of Shuttle Program (STS-LAST)

DCE/NSE/DIV: Jones/Hernandez/EP PRT: Mech Flight Controls DIVISION PRIORITY NO: 10

HARDWARE / ACTION DESCRIPTION:

- **Rudder/Speedbrake Actuator (RSBA)**
  - Remove RSBA S/N 406, position #1 or #2, from OV-104.
    - OV-104 RSBA's are Fleet Leader actuators with limited life for corrosion damage.
  - Transport Actuator to storage facility (JSC)
  - Provide Hardware Data Packages.
  - Note: To prevent aerosurface freefloat, there is a need to re-install a RSBA. Currently Hamilton-Sundstrand has a spare RSBA ETU which can be utilized.

JSC-ENGINEERING COSTS / IMPACTS:

	LOW	MED	HIGH
VEHICLE ACTION COSTS: Complexity: High, Task Duration: High			X
ESTIMATED TRANSPORTATION COSTS:		X	
ESTIMATED ANNUAL MAINTENANCE COSTS:	X		
ESTIMATED STORAGE VOLUME REQ'D:		X	

Criteria 1 – Hardware / vehicle structure that should be inspected or analyzed given its significant benefit for increasing/advancing the understanding of space hardware environment.
Criteria 2 - Hardware needed in support of a future space vehicle architecture (including hardware that can be used for subsystem development and/or Qual testing); or hardware with remaining life that could be incorporated into EA sponsored flight/test systems. .

ACTION / TRANSPORTATION / STORAGE REQMTS / FUTURE SUPPORT:

- Action: Hardware removal from vehicle
  - Difficulty of H/W Removal: Medium/High difficulty – standard actuator removal. Provisions needed to hold aerosurface in-place.
  - R&R Follow-on Actions: Storage and shipment
  - Vehicle Invasive Inspections Required: R&R.
  - Specialized Expertise (KSC): Standard RSB Actuator R&R.
  - Specialized Controls: None.
- Transportation: Standard transportation from KSC to JSC.
- Storage (JSC): Bond/Controlled Storage. No environmental control.
- Future Support (JSC):
  - JSC-NSE: Overall external hardware inspection, documentation.
  - JSC-M&P: Disassembly, removal and inspection of planetary and ring gears for general corrosion and fretting corrosion damage. To be compared with 2003 corrosion mapping.

JUSTIFICATION FOR ACTION – CRITERIA 1 :

- OV-104 RSBA's are Fleet Leader with limited life (3 yrs/5-flights) extended 2 times based on analyses, limited inspections and engineering assessments.
  - Detailed inspection of internal components will help validate the analyses and flight rationale.
  - Inspection will look at general housing corrosion and planetary gear and ring gear fretting corrosion damage.
    - Findings will be compared with detailed corrosion mapping Atlas completed in 2003 and validate methodology used.

Note: Justification continues on pg 2 if required.

Orbiter/Shuttle H/W Retention and Inspection Proposals after End of Shuttle Program (STS-LAST)

DCE/NSE/DIV: Jones/Hernandez/EP PRT: Mech Flight Controls DIVISION PRIORITY NO: 10

HARDWARE/ACTION: **Rudder/Speedbrake Actuator**

JUSTIFICATION (continued):

- The level of internal corrosion and fretting will validate the corrective actions implemented for corrosion mitigation (e.g., disconnecting RSB PDU shafts on the ground, corrosion cleanup and re-application of Conoco grease, internal corrosion cleanup and Braycote re-lubrication post teardown).
- Inspection for presence of cracks can help validate the analytical stress and loads models.

SCHEMATIC:

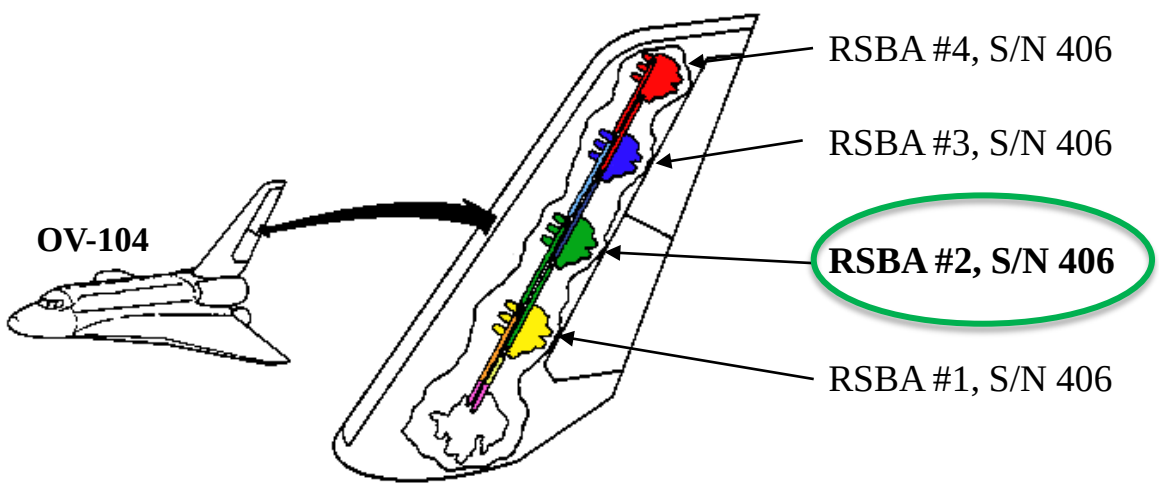

Planet Gear fretting corrosion

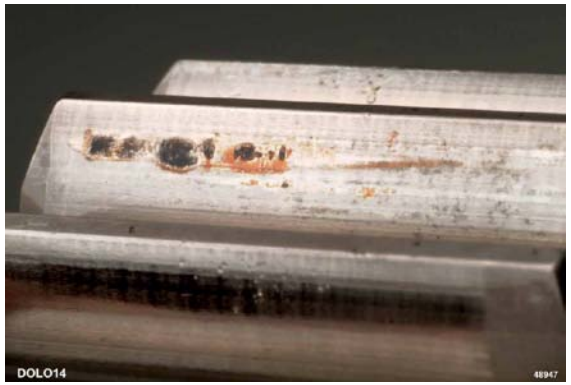

Orbiter/Shuttle H/W Retention and Inspection Proposals after End of Shuttle Program (STS-LAST)

DCE/NSE/DIV: Jones/Durning/EP PRT: OMS/RCS DIVISION PRIORITY NO: 3

HARDWARE / ACTION DESCRIPTION:

OMS/RCS Helium Isolation Valves

- Remove 12 RCS and 4 OMS Helium Isolation Valves from each vehicle – 48 Total.
- Obtain 18 spare Helium Isolation Valves (14 OMS/4 RCS) from Inventory.
- Obtain data packs for components.
- Transport 66 Helium Isolation Valves/Spares/Data Packs to storage facility.

JSC-ENGINEERING COSTS / IMPACTS:

	LOW	MED	HIGH
VEHICLE ACTION COSTS:	X*		
ESTIMATED TRANSPORTATION COSTS:		X	
ESTIMATED ANNUAL MAINTENANCE COSTS:	X		
ESTIMATED STORAGE VOLUME REQ'D:	X		

*Covered under T&R (ESSRD)

Criteria 1 – Hardware / vehicle structure that should be inspected or analyzed given its significant benefit for increasing/advancing the understanding of space hardware environment.
Criteria 2 - Hardware needed in support of a future space vehicle architecture (including hardware that can be used for subsystem development and/or Qual testing); or hardware with remaining life that could be incorporated into EA sponsored flight/test systems. .

ACTION / TRANSPORTATION / STORAGE REQMTS / FUTURE SUPPORT:

- Action: Hardware removal from vehicle
  - Difficulty of H/W Removal: Low difficulty – removal and safing is covered by nominal T&R activities per NSTS 07700 Volume XX.
  - R&R Follow-on Actions: None.
  - Vehicle Invasive Inspections Required: None
  - Specialized Expertise (KSC): None.
  - Specialized Controls: None
- Transportation: Ground transportation from KSC to JSC.
- Storage (JSC): Bond/Controlled Storage. No environmental control.
- Future Support (JSC): Engineering/M&P/Future Programs
  - Engineering – Bench testing valve actuation/talkback response characterization testing.
  - M&P – NDE, component inspection, documentation.
  - EP CFM group has expressed interest to obtain 3+ RCS Valves.
  - EP MLAS2 group has expressed interest to obtain 3+ OMS Valves.
  - Potential use on other future (e.g. Shuttle Derived) programs.

JUSTIFICATION FOR ACTION – CRITERIA 1,2 :

- Perform valve position indicator characterization tests related to Flight Unexplained Anomalies.
- Perform destructive testing of valve position indicator (destructive testing has not been performed).
- Perform destructive testing of eldest fleet valves to characterize seal integrity and valve performance.
  - Quantify degradation of sealing surfaces due to reverse migration of propellant vapors.
  - Better understand Quad Check Valve/Regulator/Iso Valve system dynamic.
- Also have requests from future programs to reuse these assets for development testing.

Note: Justification continues on pg 2 if required.

Orbiter/Shuttle H/W Retention and Inspection Proposals after End of Shuttle Program (STS-LAST)

DCE/NSE/DIV: Jones/Durning/EP PRT: OMS/RCS DIVISION PRIORITY NO: 3

HARDWARE/ACTION: **OMS/RCS Helium Isolation Valves – Transfer Vehicle & Spare Isolation Valves to JSC Engineering**

JUSTIFICATION (continued):

SCHEMATIC:

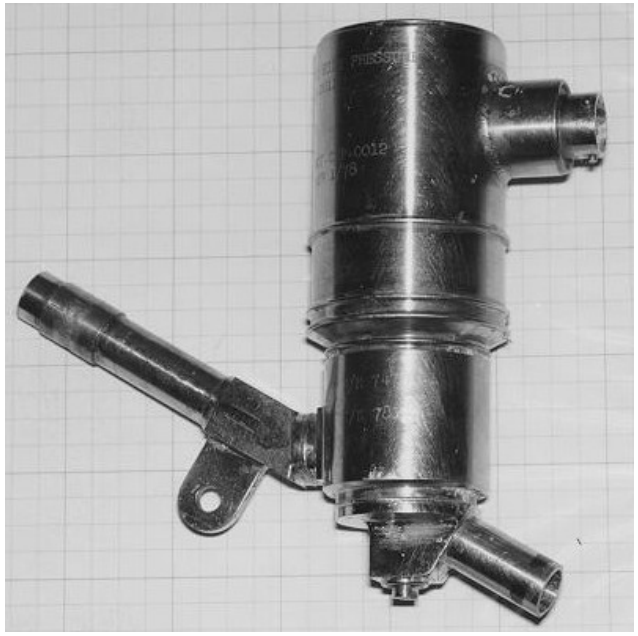

Orbiter/Shuttle H/W Retention and Inspection Proposals after End of Shuttle Program (STS-LAST)

DCE/NSE/DIV: Jones/Durning/EP PRT: OMS/RCS DIVISION PRIORITY NO: 12

HARDWARE / ACTION DESCRIPTION:

OMS/RCS Quad Check Valves

- Remove 4 OMS and 6 RCS Quad Check Valves from each vehicle – 30 Total.
- Obtain 3 spare Quad Check Valves from inventory.
- Obtain data packs for components.
- Transport 33 Quad Check Valves/Spares/Data Packs to storage facility.

JSC-ENGINEERING COSTS / IMPACTS:

	LOW	MED	HIGH
VEHICLE ACTION COSTS:	X*		
ESTIMATED TRANSPORTATION COSTS:	X		
ESTIMATED ANNUAL MAINTENANCE COSTS:	X		
ESTIMATED STORAGE VOLUME REQ'D:	X		

*Covered under T&R (ESSRD)

Criteria 1 – Hardware / vehicle structure that should be inspected or analyzed given its significant benefit for increasing/advancing the understanding of space hardware environment.
Criteria 2 - Hardware needed in support of a future space vehicle architecture (including hardware that can be used for subsystem development and/or Qual testing); or hardware with remaining life that could be incorporated into EA sponsored flight/test systems. .

ACTION / TRANSPORTATION / STORAGE REQMTS / FUTURE SUPPORT:

- Action: Hardware removal from vehicle
  - Difficulty of H/W Removal: Low difficulty – removal and safing is covered by nominal T&R activities per NSTS 07700 Volume XX.
  - R&R Follow-on Actions: None.
  - Vehicle Invasive Inspections Required: None
  - Specialized Expertise (KSC): None.
  - Specialized Controls: None
- Transportation: Ground transportation from KSC to JSC.
- Storage (JSC): Bond/Controlled Storage. No environmental control.
- Future Support (JSC): Engineering/M&P/Future Programs
  - M&P – NDE, component inspection, documentation.
  - EP CFM group has expressed interest to obtain 4+ Quad Check Valves.
  - EP MLAS2 group has expressed interest to obtain 4+ Quad Check Valves.
  - Potential use on other future (e.g. Shuttle Derived) programs.

JUSTIFICATION FOR ACTION – CRITERIA 1,2 :

- Perform destructive testing of eldest fleet QCVs to characterize seal integrity and QCV performance.
  - Quantify degradation of sealing surfaces due to reverse migration of propellant vapors.
  - Better understand Quad Check Valve/Regulator/Iso Valve system dynamic.
- Quad Check Valves have proven flight history and are common components for all likely future game changing pneumatic system designs.
- Also have requests from future programs to reuse these assets for development testing.

Note: Justification continues on pg 2 if required.

Orbiter/Shuttle H/W Retention and Inspection Proposals after End of Shuttle Program (STS-LAST)

DCE/NSE/DIV: Jones/Durning/EP PRT: OMS/RCS DIVISION PRIORITY NO: 12

HARDWARE/ACTION: **OMS/RCS Quad Check Valves – Transfer Vehicle & Spare Quad Check Valves to JSC Engineering**

JUSTIFICATION (continued):

SCHEMATIC:

Orbiter/Shuttle H/W Retention and Inspection Proposals after End of Shuttle Program (STS-LAST)

DCE/NSE/DIV: Jones/Durning/EP PRT: OMS/RCS DIVISION PRIORITY NO: 2

HARDWARE / ACTION DESCRIPTION:

RCS Thrusters

- Obtain 36 spare Primary and 11 Spare Vernier Reaction Control Thrusters from Spares Inventory.
- Obtain data packs for components.
- Transport PRCS/VRCS Spares to storage facility.

JSC-ENGINEERING COSTS / IMPACTS:

	LOW	MED	HIGH
VEHICLE ACTION COSTS:	X		
ESTIMATED TRANSPORTATION COSTS:		X	
ESTIMATED ANNUAL MAINTENANCE COSTS:	X		
ESTIMATED STORAGE VOLUME REQ'D:		X	

Criteria 1 – Hardware / vehicle structure that should be inspected or analyzed given its significant benefit for increasing/advancing the understanding of space hardware environment.
Criteria 2 - Hardware needed in support of a future space vehicle architecture (including hardware that can be used for subsystem development and/or Qual testing); or hardware with remaining life that could be incorporated into EA sponsored flight/test systems. .

ACTION / TRANSPORTATION / STORAGE REQMTS / FUTURE SUPPORT:

- Action: No vehicle hardware removal is requested.
  - Difficulty of H/W Removal: Not Applicable – Parts are in Spares.
  - R&R Follow-on Actions: None.
  - Vehicle Invasive Inspections Required: None.
  - Specialized Expertise (KSC): None.
  - Specialized Controls: None.
- Transportation: Standard RCS thruster shipping and storage container. Ground transportation to storage location.
- Storage (WSTF): Bond/Controlled Storage. No environmental control. Maintain flight readiness configuration of spares.
- Future Support (JSC): Future Programs
  - EP MLAS2 group has expressed interest to obtain 16+ PRCS Thrusters.
  - Potential use on Shuttle Derived programs.

JUSTIFICATION FOR ACTION – CRITERIA 2 :

- OMS/RCS PRT has historically received requests for transfer of thrusters to new programs for development and qualification testing. Thrusters represent significant costs and engineering time to develop and on-hand assets will allow for efficient response to pathfinder program requests.
- Currently have requests from future programs to reuse these assets for development testing.

Note: Justification continues on pg 2 if required.

Orbiter/Shuttle H/W Retention and Inspection Proposals after End of Shuttle Program (STS-LAST)

DCE/NSE/DIV: Jones/Durning/EP PRT: OMS/RCS DIVISION PRIORITY NO: 2

HARDWARE/ACTION: **RCS Thrusters – Obtain spare PRCS & VRCS Thrusters from Spares Inventory**

JUSTIFICATION (continued):

SCHEMATIC:

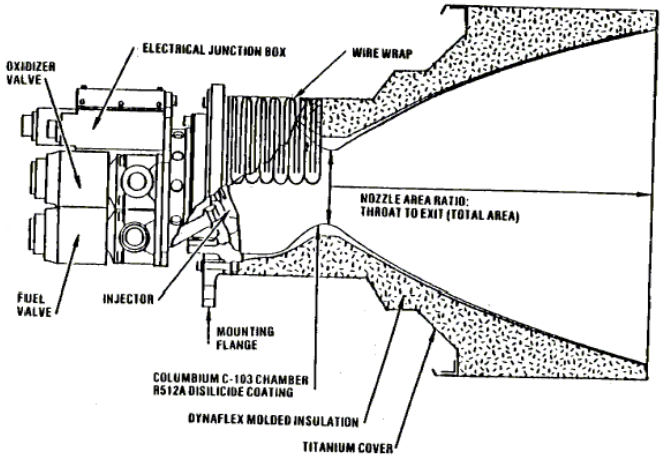

Primary Thruster Cross Section Schematic

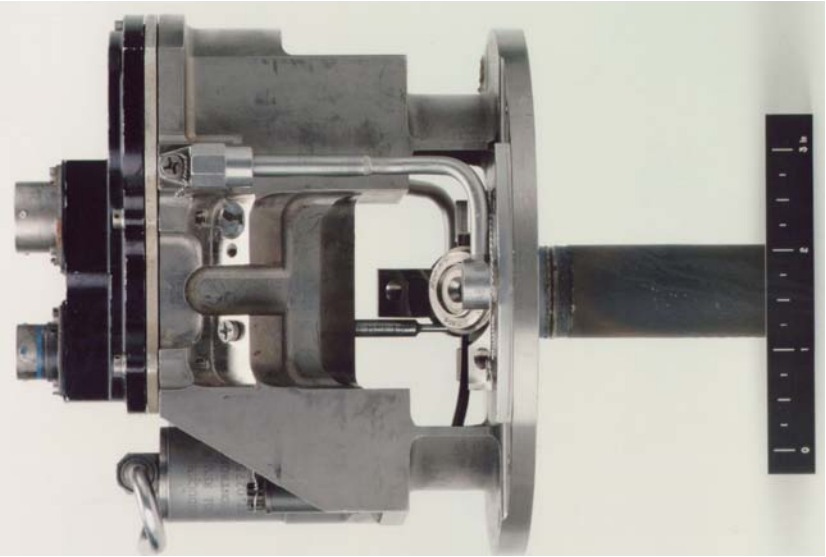

Vernier Thruster Image

Orbiter/Shuttle H/W Retention and Inspection Proposals after End of Shuttle Program (STS-LAST)

DCE/NSE/DIV: Jones/Durning/EP PRT: OMS/RCS DIVISION PRIORITY NO: 4

HARDWARE / ACTION DESCRIPTION:

OMS/RCS Helium Regulators

- Remove 4 OMS and 12 RCS Helium Regulators from each vehicle – 48 Total.
- Obtain 10 spare Helium Regulators (7 OMS/3 RCS) from Inventory.
- Obtain data packs for components.
- Transport 58 Helium Regulators/Spares/Data Packs to storage facility.

JSC-ENGINEERING COSTS / IMPACTS:

	LOW	MED	HIGH
VEHICLE ACTION COSTS:	X*		
ESTIMATED TRANSPORTATION COSTS:		X	
ESTIMATED ANNUAL MAINTENANCE COSTS:	X		
ESTIMATED STORAGE VOLUME REQ'D:	X		

*Covered under T&R (ESSRD)

Criteria 1 – Hardware / vehicle structure that should be inspected or analyzed given its significant benefit for increasing/advancing the understanding of space hardware environment.
Criteria 2 - Hardware needed in support of a future space vehicle architecture (including hardware that can be used for subsystem development and/or Qual testing); or hardware with remaining life that could be incorporated into EA sponsored flight/test systems. .

ACTION / TRANSPORTATION / STORAGE REQMTS / FUTURE SUPPORT:

- Action: Hardware removal from vehicle
  - Difficulty of H/W Removal: Low difficulty – removal and safing is covered by nominal T&R activities per NSTS 07700 Volume XX.
  - R&R Follow-on Actions: None.
  - Vehicle Invasive Inspections Required: None
  - Specialized Expertise (KSC): None.
  - Specialized Controls: None
- Transportation: Ground transportation from KSC to JSC.
- Storage (JSC): Bond/Controlled Storage. No environmental control.
- Future Support (JSC): Engineering/M&P/Future Programs
  - M&P – NDE, component inspection, documentation.
  - EP CFM group has expressed interest to obtain 3+ RCS Regulators.
  - EP MLAS2 group has expressed interest to obtain 3+ OMS Regulators.
  - Potential use on other future (e.g. Shuttle Derived) programs.

JUSTIFICATION FOR ACTION – CRITERIA 1,2 :

- Perform destructive testing of eldest fleet regulators to characterize seal integrity and regulator performance.
  - Quantify degradation of sealing surfaces due to reverse migration of propellant vapors.
  - Better understand Quad Check Valve/Regulator/Iso Valve system dynamic.
- Pressure regulators have proven flight history and are common components for all likely future game changing pneumatic system designs.
- Also have requests from future programs to reuse these assets for development testing.

Note: Justification continues on pg 2 if required.

Orbiter/Shuttle H/W Retention and Inspection Proposals after End of Shuttle Program (STS-LAST)

DCE/NSE/DIV: Jones/Durning/EP PRT: OMS/RCS DIVISION PRIORITY NO: 4

HARDWARE/ACTION: **OMS/RCS Helium Regulators – Transfer Vehicle & Spare Regulators to JSC Engineering**

JUSTIFICATION (continued):

SCHEMATIC:

Orbiter/Shuttle H/W Retention and Inspection Proposals after End of Shuttle Program (STS-LAST)

DCE/NSE/DIV: Jones/Durning/EP PRT: OMS/RCS DIVISION PRIORITY NO: 7

HARDWARE / ACTION DESCRIPTION:

OMS Engines

- Obtain 3 (5?) spare OMS Engines and 6 Spare Nozzles from Spares Inventory.
- Obtain data packs for components.
- Transport OMS Engines/Nozzles Spares/Data Packs to storage facility.

JSC-ENGINEERING COSTS / IMPACTS:

	LOW	MED	HIGH
VEHICLE ACTION COSTS:	X		
ESTIMATED TRANSPORTATION COSTS:			X
ESTIMATED ANNUAL MAINTENANCE COSTS:	X		
ESTIMATED STORAGE VOLUME REQ'D:			X

Criteria 1 – Hardware / vehicle structure that should be inspected or analyzed given its significant benefit for increasing/advancing the understanding of space hardware environment.
Criteria 2 - Hardware needed in support of a future space vehicle architecture (including hardware that can be used for subsystem development and/or Qual testing); or hardware with remaining life that could be incorporated into EA sponsored flight/test systems. .

ACTION / TRANSPORTATION / STORAGE REQMTS / FUTURE SUPPORT:

- Action: No vehicle hardware removal is requested.
  - Difficulty of H/W Removal: Not Applicable – Parts are in Spares.
  - R&R Follow-on Actions: None.
  - Vehicle Invasive Inspections Required: None.
  - Specialized Expertise (KSC): None.
  - Specialized Controls: None.
- Transportation: Standard OMS Engine/Nozzle shipping and storage container. Ground transportation to storage location.
- Storage (WSTF): Bond/Controlled Storage. No environmental control. Maintain flight readiness configuration of spares.
- Future Support (JSC): Future Programs
  - EP Currently has request from PCAD to obtain 1 OMS Nozzle.
  - Potential use on Shuttle Derived programs.

JUSTIFICATION FOR ACTION – CRITERIA 2 :

- OMS/RCS PRT has historically received requests for transfer of OMS Engines to new programs for development and qualification testing. Engines represent significant costs and engineering time to develop and on-hand assets will allow for efficient response to pathfinder program requests.
- Currently have requests from future programs to reuse these assets for development testing.

Note: Justification continues on pg 2 if required.

Orbiter/Shuttle H/W Retention and Inspection Proposals after End of Shuttle Program (STS-LAST)

DCE/NSE/DIV: Jones/Durning/EP PRT: OMS/RCS DIVISION PRIORITY NO: 7

HARDWARE/ACTION: **OMS Engine - Obtain spare OMS Engines and Nozzles from Spares Inventory**

JUSTIFICATION (continued):

SCHEMATIC:

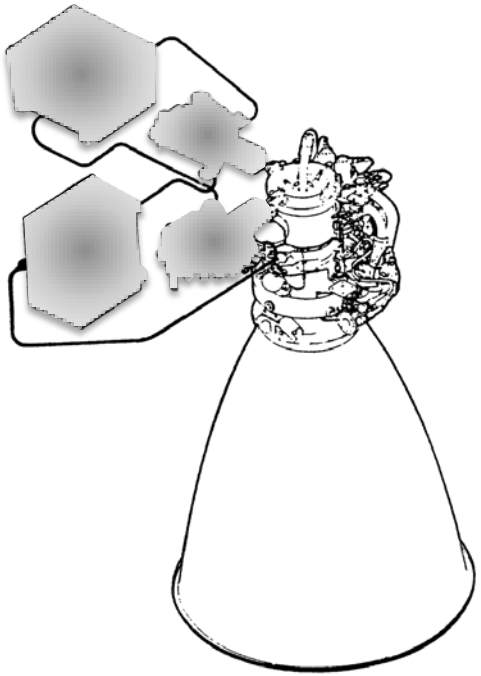

OMS Engine w/ Nozzle Extension
(Gimbal Actuators & Controllers
Shown Shaded But Not Requested)

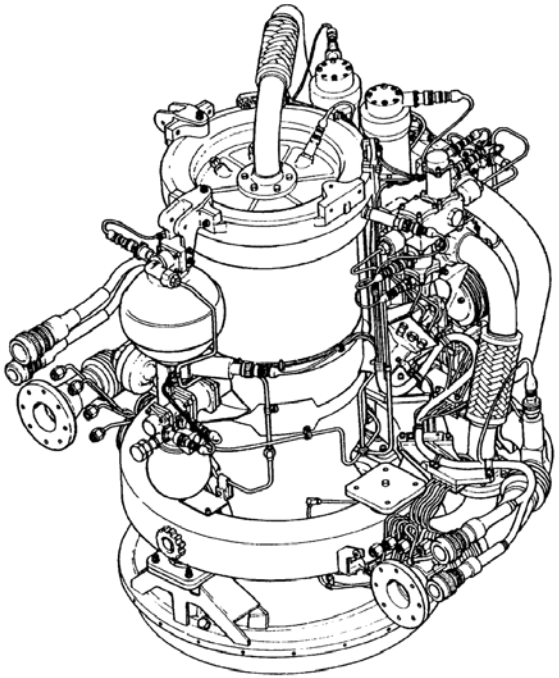

OMS Engine (View A)

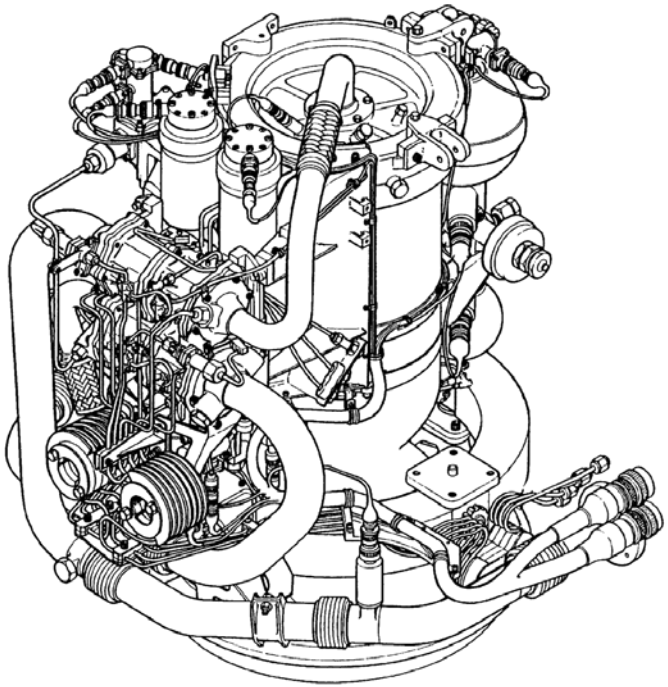

OMS Engine (View B)

Orbiter/Shuttle H/W Retention and Inspection Proposals after End of Shuttle Program (STS-LAST)

DCE/NSE/DIV: Jones/Araghi/EP PRT: FCP/PRSD DIVISION PRIORITY NO: XX of XX

HARDWARE / ACTION DESCRIPTION:

- Fuel Cell Powerplant, FCP
- Remove 3 FCP, one with low, one with mid and one with the longest mission time. FCP power section is certified for 2600 hours of operation and the accessory section is certified for 10,000-hours.

JSC-ENGINEERING COSTS / IMPACTS:

	LOW	MED	HIGH
VEHICLE ACTION COSTS:	X		
ESTIMATED TRANSPORTATION COSTS:	X		
ESTIMATED ANNUAL MAINTENANCE COSTS:	X		
ESTIMATED STORAGE VOLUME REQ'D:	X		

Criteria 1 – Hardware / vehicle structure that should be inspected or analyzed given its significant benefit for increasing/advancing the understanding of space hardware environment.
Criteria 2 - Hardware needed in support of a future space vehicle architecture (including hardware that can be used for subsystem development and/or Qual testing); or hardware with remaining life that could be incorporated into EA sponsored flight/test systems. .

ACTION / TRANSPORTATION / STORAGE REQMTS / FUTURE SUPPORT:

- Action: Hardware removal and safing from vehicles is covered T&R activities.
- Vehicle Invasive Inspections Required: Standard FCP removal. Drainage of FCP Coolant and product water required.
- Specialized Expertise (KSC): Requires KSC tech support for R&R and KSC Logistics support storage/transportation to storage facility (JSC)
- Specialized Controls: Standard canister.
- Transportation: Ground transportation to JSC
- Storage (JSC): JSC Bond/Stores with ambient environmental control
- Future Support (JSC):
  - JSC-M&P – NDE, component inspection, documentation.
  - Potential use in future programs (e.g., Shuttle Derived, etc).

JUSTIFICATION FOR ACTION – CRITERIA 1&2 :

- **Removal of Fuel Cell Powerplant.**
- Orbiter FCP/PRSD have potential use in future programs.
  - Space rated Energy Storage technologies are difficult to manufacture with long lead times and very expensive.
- Orbiter FCP have the longest age and cycle life flight history for all Fuel Cell technologies
  - Inspection data is extremely valuable for other Fuel Cell used in commercial (Stationery, Auto and residential) application.

Note: Justification continues on pg 2 if required.

Orbiter/Shuttle H/W Retention and Inspection Proposals after End of Shuttle Program (STS-LAST)

DCE/NSE/DIV: Jones/Araghi/EP PRT: FCP/PRSD DIVISION PRIORITY NO: XX of XX

HARDWARE/ACTION: PRSD Tanks & Fuel Cell FCMS Box

JUSTIFICATION (continued):

- Removal of Fuel Cell Powerplant for future programs consideration & material degradation studies.

SCHEMATIC:

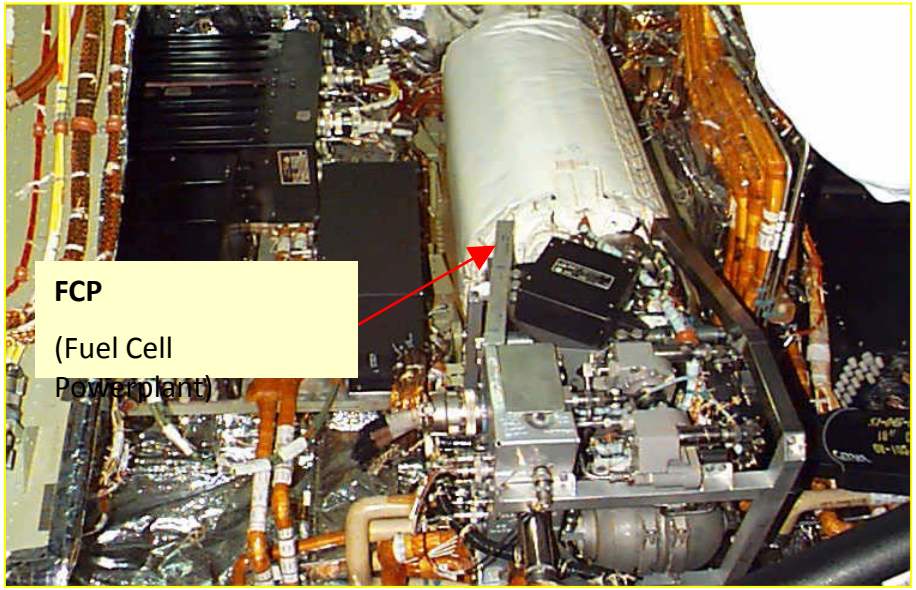

Typical Fuel Cell Powerplant

ER/Software, Robotics, and Simulation Division

STS-LAST Hardware Retention Proposal

Quad Charts

EA Shuttle Hardware Retention Post STS-Last

ER – Category 1: Knowledge Capture

1. SRMS S/N 303 Joints with:
   - wireless strain gauges
   - Qual Booms
   - EE S/N 403
   - Spare Motor Modules (5)
   - Spare Electronics (6)
   - Mechanical and Electrical Ground Support Equipment
   - Air Bearing Test Rig from MDA

ER - Category 2: Future Use

1. SRMS S/N 202 with End Effector S/N 303
   - Shipping containers
   - Strongback and Dolly's
2. SRMS S/N 301 with End Effector S/N 402
   - Shipping containers
   - Strongback and Dolly's

Orbiter/Shuttle H/W Retention and Inspection Proposals after End of Shuttle Program (STS-LAST)

DCE/NSE/DIV: Jorgensen/ER PRT: SRMS DIVISION PRIORITY NO:1of 3

HARDWARE / ACTION DESCRIPTION:

- SRMS S/N 303 Joints with qual booms, spare Motor Modules (5) and Electronics (6), End Effector S/N 403, the Wireless Strain Gauges (WSGIS), and all GSE
- Air bearing test rig from MDA

JSC-ENGINEERING COSTS / IMPACTS:

	LOW	MED	HIGH
VEHICLE ACTION COSTS:	X		
ESTIMATED TRANSPORTATION COSTS:			X
ESTIMATED ANNUAL MAINTENANCE COSTS:	X		
ESTIMATED STORAGE VOLUME REQ'D:			X

Criteria 1 – Hardware / vehicle structure that should be inspected or analyzed given its significant benefit for increasing/advancing the understanding of space hardware environment.
Criteria 2 - Hardware needed in support of a future space vehicle architecture (including hardware that can be used for subsystem development and/or Qual testing); or hardware with remaining life that could be incorporated into EA sponsored flight/test systems. .

ACTION / TRANSPORTATION / STORAGE REQMTS / FUTURE SUPPORT:

- Action: Ship OBSS from KSC to MDA. Attach booms from OBSS to S/N 303 joints and ship from MDA to JSC and provide all pertinent data packs
  - Difficulty of H/W Removal: Low difficulty – Standard procedures at JSC
  - R&R Follow-on Actions: None
  - Vehicle Invasive Inspections Required: None
  - Specialized Expertise (KSC): Requires MDA support
  - Specialized Controls: None
- Transportation:Ground transportation from MDA to JSC
- Storage (JSC): Building 9 flat floor
- Future Support (JSC):
  - Technician support at JSC
  - ER

JUSTIFICATION FOR ACTION – CRITERIA 1 :

- 0g dynamics validation of simulation models – these models can serve as the basis for future space robotic system simulations
- Detailed flight data obtained only on small set of early flights and one post-RTF flight
- Testing at JSC would allow retest to isolate areas that don't compare well with models
- Ground testing at JSC would be higher sampling frequency than flight data (much flight data is only 1 HZ)

Note: Justification continues on pg 2 if required.

Orbiter/Shuttle H/W Retention and Inspection Proposals after End of Shuttle Program (STS-LAST)

DCE/NSE/DIV: Jorgensen/ER PRT: SRMS DIVISION PRIORITY NO: XX of XX

HARDWARE/ACTION:

JUSTIFICATION (continued):

- xxx
- xxx

SCHEMATIC:

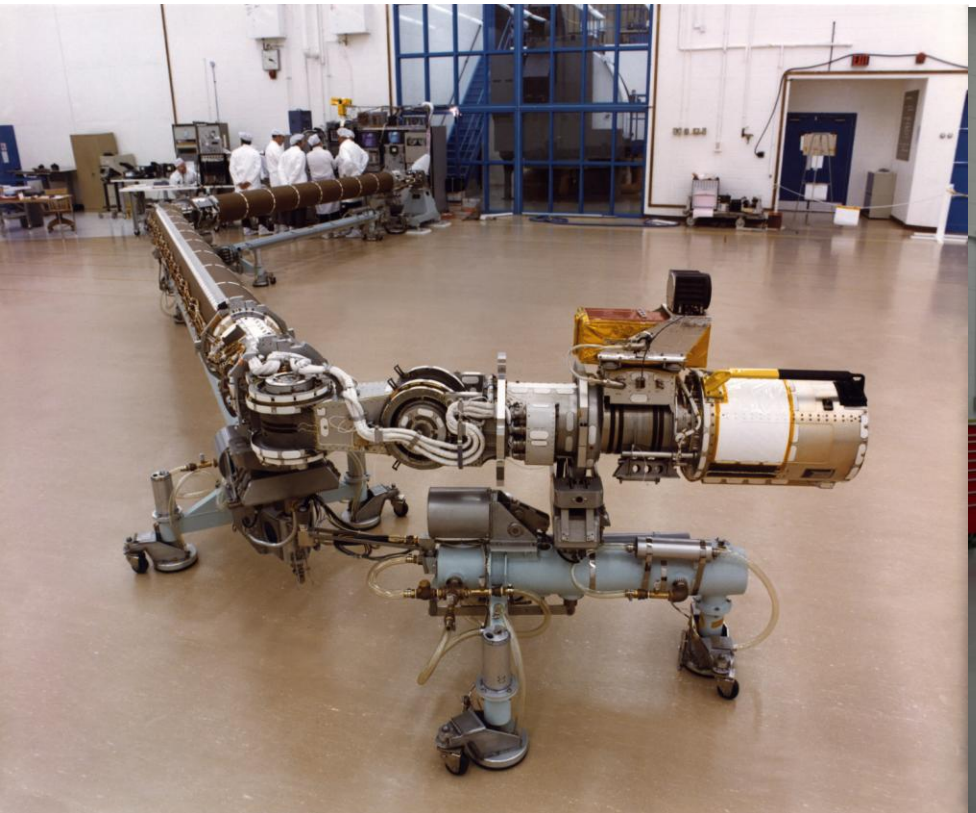

Orbiter/Shuttle H/W Retention and Inspection Proposals after End of Shuttle Program (STS-LAST)

DCE/NSE/DIV: Jorgensen/ER PRT: SRMS DIVISION PRIORITY NO: 2 of 3

HARDWARE / ACTION DESCRIPTION:

- SRMS Flight arm S/N 202 with End Effector S/N 303 and associated GSE

JSC-ENGINEERING COSTS / IMPACTS:

	LOW	MED	HIGH
VEHICLE ACTION COSTS:	X		
ESTIMATED TRANSPORTATION COSTS:		X	
ESTIMATED ANNUAL MAINTENANCE COSTS:	X		
ESTIMATED STORAGE VOLUME REQ'D:			X

Criteria 1 – Hardware / vehicle structure that should be inspected or analyzed given its significant benefit for increasing/advancing the understanding of space hardware environment.
Criteria 2 - Hardware needed in support of a future space vehicle architecture (including hardware that can be used for subsystem development and/or Qual testing); or hardware with remaining life that could be incorporated into EA sponsored flight/test systems. .

ACTION / TRANSPORTATION / STORAGE REQMTS / FUTURE SUPPORT:

- Action: Remove SRMS from OV-103 ,Package and ship from KSC to JSC
  - Difficulty of H/W Removal: Low – Standard procedures
  - R&R Follow-on Actions: None
  - Vehicle Invasive Inspections Required: None
  - Specialized Expertise (KSC): None
  - Specialized Controls: None
- Transportation: Grd transportation from KSC to JSC
- Storage (JSC): Bonded storage with ambient environmental control –limited access(building 9 or 56)
- Future Support (JSC): None
  - ER

JUSTIFICATION FOR ACTION – CRITERIA 2 :

- Preserved in bonded storage for future missions to LEO, GEO, NEO or beyond

Note: Justification continues on pg 2 if required.

Orbiter/Shuttle H/W Retention and Inspection Proposals after End of Shuttle Program (STS-LAST)

DCE/NSE/DIV: Jorgensen/ER PRT: SRMS DIVISION PRIORITY NO: XX of XX

HARDWARE/ACTION:

JUSTIFICATION (continued):

- xxx
- xxx

SCHEMATIC:

S130E005296

Orbiter/Shuttle H/W Retention and Inspection Proposals after End of Shuttle Program (STS-LAST)

DCE/NSE/DIV: Jorgensen/ER PRT: SRMS DIVISION PRIORITY NO: 3 of 3

HARDWARE / ACTION DESCRIPTION:

- SRMS Flight arm S/N 301 with End Effector S/N 402 and associated GSE

JSC-ENGINEERING COSTS / IMPACTS:

	LOW	MED	HIGH
VEHICLE ACTION COSTS:	X		
ESTIMATED TRANSPORTATION COSTS:		X	
ESTIMATED ANNUAL MAINTENANCE COSTS:	X		
ESTIMATED STORAGE VOLUME REQ'D:			X

Criteria 1 – Hardware / vehicle structure that should be inspected or analyzed given its significant benefit for increasing/advancing the understanding of space hardware environment.
Criteria 2 - Hardware needed in support of a future space vehicle architecture (including hardware that can be used for subsystem development and/or Qual testing); or hardware with remaining life that could be incorporated into EA sponsored flight/test systems. .

ACTION / TRANSPORTATION / STORAGE REQMTS / FUTURE SUPPORT:

- Action: Remove from OV-104, Package and ship from KSC to JSC
  - Difficulty of H/W Removal: Low – Standard procedures
  - R&R Follow-on Actions: None
  - Vehicle Invasive Inspections Required: None
  - Specialized Expertise (KSC): None
  - Specialized Controls: None
- Transportation: Grd transportation from KSC to JSC
- Storage (JSC): Bonded storage with ambient environmental control –limited access(building 9 or 56)
- Future Support (JSC): None
  - ER

JUSTIFICATION FOR ACTION – CRITERIA 2 :

- Preserved in bonded storage for future missions to LEO, GEO, NEO or beyond

Note: Justification continues on pg 2 if required.

Orbiter/Shuttle H/W Retention and Inspection Proposals after End of Shuttle Program (STS-LAST)

DCE/NSE/DIV: Jorgensen/ER PRT: SRMS DIVISION PRIORITY NO: XX of XX

HARDWARE/ACTION:

JUSTIFICATION (continued):

- xxx
- xxx

SCHEMATIC:

S130E005296

54

EV/Avionics Systems Division

STS-LAST Hardware Retention Proposal

Quad Charts

Top List from EV

Criteria 2: Future Usage

1. Sensor Pack 1 (LDRI/ITVC/PTU) and Sensor Pack 2 (LCS/IDC)
2. Wing Leading Edge (WLE) Data Recorder
3. WLE Sensor-Side Relay
4. WLE Piezoelectric Accelerometer
5. Switches

Criteria 3: Display/Educational/Reverse Engineering

1. MEDS displays (or any other displays sitting around)
2. Hand controllers
3. ITVCs (B&W TV Cameras), Video Switching Unit, Remote Control Unit, Video Processing Unit, Color TV Monitors, Videospection Cameras and Illuminators

Orbiter/Shuttle H/W Retention and Inspection Proposals after End of Shuttle Program (STS-LAST)

DCE/NSE/DIV: Nuss/Olstad/EV PRT: OBSS DIVISION PRIORITY NO: XX of XX

HARDWARE / ACTION DESCRIPTION:

- Sensor Pack 1 (LDRI/ITVC/PTU) and Sensor Pack 2 (LCS/IDC) (1 ea)
  - Remove from OV104 only, and ship to JSC

JSC-ENGINEERING COSTS / IMPACTS:

	LOW	MED	HIGH
VEHICLE ACTION COSTS:	X		
ESTIMATED TRANSPORTATION COSTS:	X		
ESTIMATED ANNUAL MAINTENANCE COSTS:		X	
ESTIMATED STORAGE VOLUME REQ'D:		X	

Criteria 1 – Hardware / vehicle structure that should be inspected or analyzed given its significant benefit for increasing/advancing the understanding of space hardware environment.
Criteria 2 - Hardware needed in support of a future space vehicle architecture (including hardware that can be used for subsystem development and/or Qual testing); or hardware with remaining life that could be incorporated into EA sponsored flight/test systems. .

ACTION / TRANSPORTATION / STORAGE REQMTS / FUTURE SUPPORT:

- Action: Hardware removal from vehicle
  - Difficulty of H/W Removal: low difficulty, GSE already exists, handling of delicate electro-optical components
  - R&R Follow-on Actions: N/A
  - Vehicle Invasive Inspections Required: None
  - Specialized Expertise (KSC): Requires KSC tech support for removal and KSC Logistics support for transportation from KSC to JSC.
  - Specialized Controls: None
- Transportation: Grd transportation from KSC to JSC
- Storage (JSC): JSC Bond/Storage with ambient environmental control (humidity, temp) with ESD packaging. Data packs are electronic.
- Future Support (JSC):
  - JSC Support: See justification section.

JUSTIFICATION FOR ACTION – CRITERIA 2 :

- The current existing Inspection hardware is seriously being considered for ISS MMOD Inspections (modules and EV stored ORU). Additionally, Inspection is potentially being levied on re-entry vehicles (i.e. inspection at ISS of returning COTS, ERV, etc.).

Note: Justification continues on pg 2 if required.

Orbiter/Shuttle H/W Retention and Inspection Proposals after End of Shuttle Program (STS-LAST)

DCE/NSE/DIV: Nuss/Olstad/EV PRT: OBSS DIVISION PRIORITY NO: XX of XX

HARDWARE/ACTION: Sensor Pack 1 and 2 removal from OV104 and ship to JSC

SCHEMATIC:

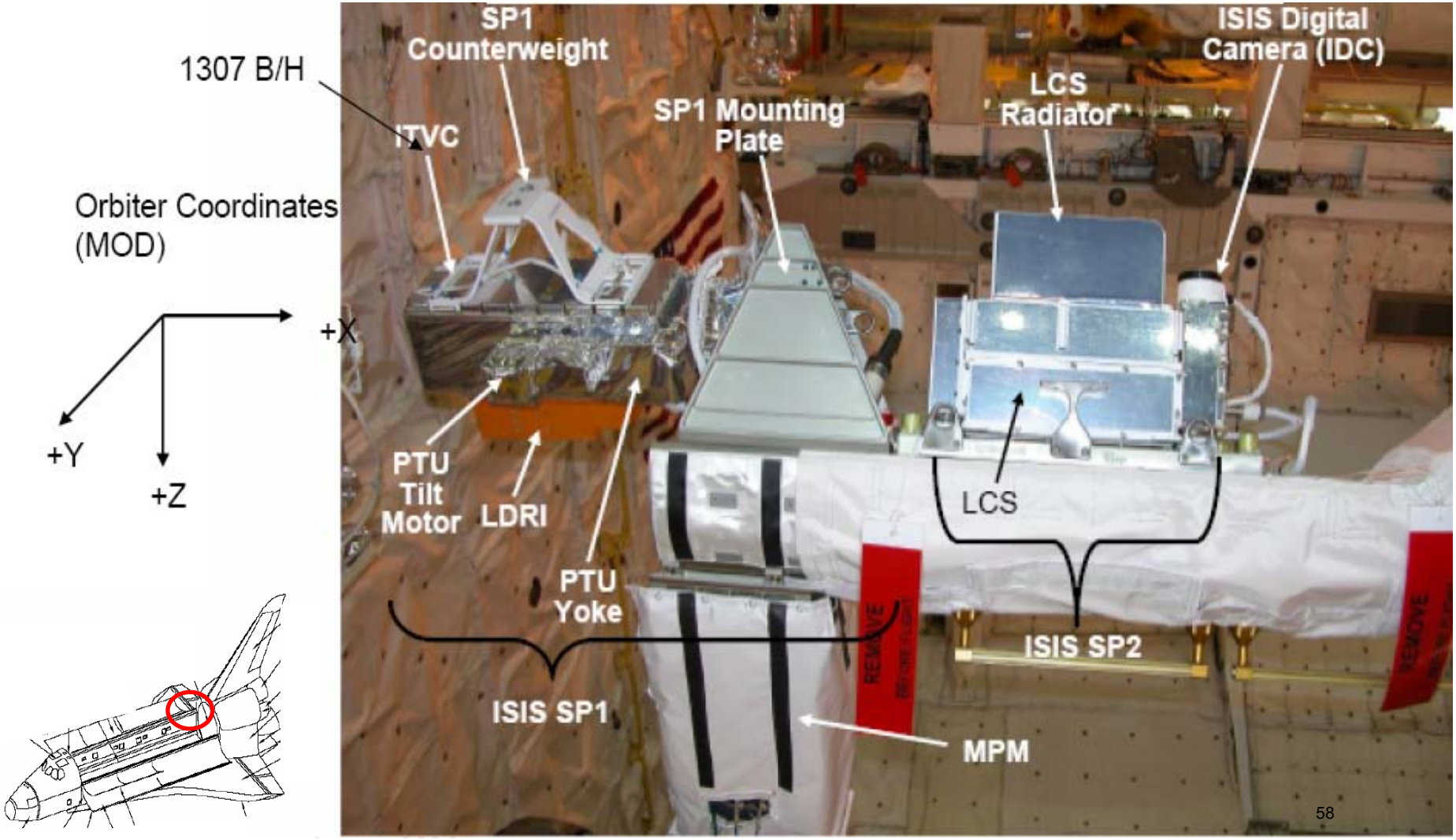

Orbiter/Shuttle H/W Retention and Inspection Proposals after End of Shuttle Program (STS-LAST)

DCE/NSE/DIV: Nuss/Wells/EV PRT: MWIS DIVISION PRIORITY NO: XX of XX

HARDWARE / ACTION DESCRIPTION:

- Wing Leading Edge Data Recorder
  - Remove Qty 44 ea per vehicle from the wing cavity/glove compartments

JSC-ENGINEERING COSTS / IMPACTS:

	LOW	MED	HIGH
VEHICLE ACTION COSTS:	X		
ESTIMATED TRANSPORTATION COSTS:	X		
ESTIMATED ANNUAL MAINTENANCE COSTS:	X		
ESTIMATED STORAGE VOLUME REQ'D:	X		

Criteria 1 – Hardware / vehicle structure that should be inspected or analyzed given its significant benefit for increasing/advancing the understanding of space hardware environment.
Criteria 2 - Hardware needed in support of a future space vehicle architecture (including hardware that can be used for subsystem development and/or Qual testing); or hardware with remaining life that could be incorporated into EA sponsored flight/test systems. .

ACTION / TRANSPORTATION / STORAGE REQMTS / FUTURE SUPPORT:

- Action: Hardware removal from vehicle
  - Difficulty of H/W Removal: Low difficulty – no special access required beyond normal OPF procedures
  - R&R Follow-on Actions: Remove Qty 1 L91 battery assembly per data recorder and scrap.
  - Vehicle Invasive Inspections Required: None
  - Specialized Expertise (KSC): Requires KSC tech support for R&R and KSC Logistics support for transportation from KSC to JSC.
  - Specialized Controls: None
- Transportation: Grd transportation from KSC to JSC
- Storage (JSC): JSC Bond/Stores with ambient environmental control (humidity, temp) and ESD sensitive packaging. Including data packs.
- Future Support (JSC):
  - JSC Support: See justification section.

JUSTIFICATION FOR ACTION – CRITERIA 2 :

- Would like to retain this hardware to support future add-on instrumentation needs within the space program/DOD. Examples of recent requests for this type of instrumentation include the Lunar Electric Rover project, Project M (RR1 Lander R&D test support), SSP Left OMS Pod Main Engine Ignition Instrumentation support. This hardware is estimated to cost ~ $9K per unit or $1,188,000 for 132 units.

Note: Justification continues on pg 2 if required.

Orbiter/Shuttle H/W Retention and Inspection Proposals after End of Shuttle Program (STS-LAST)

DCE/NSE/DIV: Nuss/Wells/EV PRT: MWIS DIVISION PRIORITY NO: XX of XX

HARDWARE/ACTION: Wing Leading Edge Impact Detection System (WLEIDS)- Removal of all WLE data recorders

JUSTIFICATION (continued):

- Removal of Qty 1 Lithium Di-Sulfide L91 battery assembly per data recorder is already planned per vehicle safing plan, which requires Qty 2 bolts in the lid to be removed for accessing the battery pack. With little additional effort, complete removal of the data recorder can be achieved by removal of two bolts through the data recorder base and disconnecting three accel cables.

SCHEMATIC:

•Dimension & Mass:
3.25” x 2.75” x 1.5”
~0.75 lbs

•Certified as GFE and manufactured by Invocon P/N IVC2241001-307
• 915 MHz RF for Upload & Download (USB Download capability)
•Power supply: Energizer L91 2-AA Battery Pack
•20 KHz (3 channels)
•1 Aux Channel for RTD
• Low pass filter: 6KHz
• High pass filter: 10Hz

Orbiter/Shuttle H/W Retention and Inspection Proposals after End of Shuttle Program (STS-LAST)

DCE/NSE/DIV: Nuss/Wells/EV PRT: MWIS DIVISION PRIORITY NO: XX of XX

HARDWARE / ACTION DESCRIPTION:

- Wing Leading Edge (WLE) Sensor-Side Relay (12ea)
  - Remove Qty 4 ea per vehicle from the wing cavity/glove compartments

JSC-ENGINEERING COSTS / IMPACTS:

	LOW	MED	HIGH
VEHICLE ACTION COSTS:	X		
ESTIMATED TRANSPORTATION COSTS:	X		
ESTIMATED ANNUAL MAINTENANCE COSTS:	X		
ESTIMATED STORAGE VOLUME REQ'D:	X		

Criteria 1 – Hardware / vehicle structure that should be inspected or analyzed given its significant benefit for increasing/advancing the understanding of space hardware environment.
Criteria 2 - Hardware needed in support of a future space vehicle architecture (including hardware that can be used for subsystem development and/or Qual testing); or hardware with remaining life that could be incorporated into EA sponsored flight/test systems. .

ACTION / TRANSPORTATION / STORAGE REQMTS / FUTURE SUPPORT:

- Action: Hardware removal from vehicle
  - Difficulty of H/W Removal: Low difficulty – no special access required beyond normal OPF procedures
  - R&R Follow-on Actions: Remove Qty 1 L91 battery assembly per relay and scrap.
  - Vehicle Invasive Inspections Required: None
  - Specialized Expertise (KSC): Requires KSC tech support for R&R and KSC Logistics support for transportation from KSC to JSC.
  - Specialized Controls: None
- Transportation: Grd transportation from KSC to JSC
- Storage (JSC): JSC Bond/Stores with ambient environmental control (humidity, temp) and ESD sensitive packaging. Including data packs.
- Future Support (JSC):
  - JSC Support: See justification section.

JUSTIFICATION FOR ACTION – CRITERIA 2 :

- Would like to retain this hardware to support future add-on instrumentation needs within the space program/DOD. Examples of recent requests for this type of instrumentation include the Lunar Electric Rover project, Project M (RR1 Lander R&D test support), SSP Left OMS Pod Main Engine Ignition Instrumentation support. This hardware is estimated to cost ~ $4K per unit or $48K for 12 units.

Note: Justification continues on pg 2 if required.

Orbiter/Shuttle H/W Retention and Inspection Proposals after End of Shuttle Program (STS-LAST)

DCE/NSE/DIV: Nuss/Wells/EV PRT: MWIS DIVISION PRIORITY NO: XX of XX

HARDWARE/ACTION: Wing Leading Edge Impact Detection System (WLEIDS)- Removal of all WLE Sensor-Side Relays

JUSTIFICATION (continued):

- Removal of Qty 1 Lithium Di-Sulfide L91 battery assembly per relay is already planned per vehicle safing plan, which requires Qty 2 bolts in the lid to be removed for accessing the battery pack. With little additional effort, complete removal of the relay can be achieved by removal of two bolts through the relay base and disconnecting two cables.

SCHEMATIC:

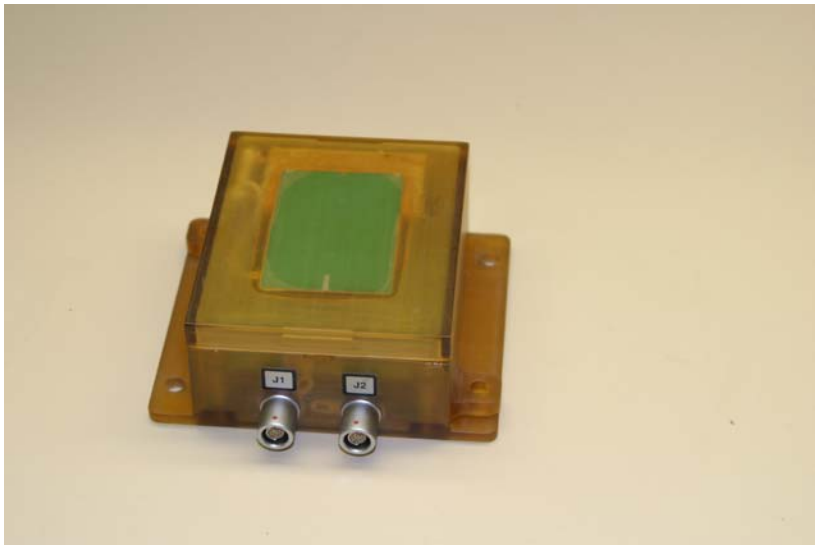

- Certified as GFE and manufactured by Invocon P/N IVC2241002-310
- 915 MHz RF for Upload & Download
- Power supply: Energizer L91 2-AA Battery Pack
- TTL to RS485 Level Shifter

- Dimension & Mass:
  3.26” x 2.69” x 1.28”
  ~0.5 lbs

Orbiter/Shuttle H/W Retention and Inspection Proposals after End of Shuttle Program (STS-LAST)

DCE/NSE/DIV: Nuss/Wells/EV PRT: MWIS DIVISION PRIORITY NO: XX of XX

HARDWARE / ACTION DESCRIPTION:

- Wing Leading Edge (WLE) Piezoelectric Accelerometer (396ea)
  - Remove Qty 132 ea per vehicle from the wing RCC spar panel

JSC-ENGINEERING COSTS / IMPACTS:

	LOW	MED	HIGH
VEHICLE ACTION COSTS:	X		
ESTIMATED TRANSPORTATION COSTS:	X		
ESTIMATED ANNUAL MAINTENANCE COSTS:	X		
ESTIMATED STORAGE VOLUME REQ'D:	X		

Criteria 1 – Hardware / vehicle structure that should be inspected or analyzed given its significant benefit for increasing/advancing the understanding of space hardware environment.
Criteria 2 - Hardware needed in support of a future space vehicle architecture (including hardware that can be used for subsystem development and/or Qual testing); or hardware with remaining life that could be incorporated into EA sponsored flight/test systems. .

ACTION / TRANSPORTATION / STORAGE REQMTS / FUTURE SUPPORT:

- Action: Hardware removal from vehicle
  - Difficulty of H/W Removal: medium difficulty – requires access to wing spar behind RCC panels.
  - R&R Follow-on Actions: N/A
  - Vehicle Invasive Inspections Required: None
  - Specialized Expertise (KSC): Requires KSC tech support for R&R and KSC Logistics support for transportation from KSC to JSC.
  - Specialized Controls: None
- Transportation: Grd transportation from KSC to JSC
- Storage (JSC): JSC Bond/Stores with ambient environmental control (humidity, temp). Including data packs.
- Future Support (JSC):
  - JSC Support: See justification section.

JUSTIFICATION FOR ACTION – CRITERIA 2 :

- Would like to retain this hardware to support future add-on instrumentation needs within the space program/DOD. Examples of recent requests for this type of instrumentation include the Lunar Electric Rover project, Project M (RR1 Lander R&D test support), SSP Left OMS Pod Main Engine Ignition Instrumentation support. This hardware is estimated to cost ~ $600 per unit or $237,600 for 396 units.

Note: Justification continues on pg 2 if required.

Orbiter/Shuttle H/W Retention and Inspection Proposals after End of Shuttle Program (STS-LAST)

DCE/NSE/DIV: Nuss/Wells/EV PRT: MWIS DIVISION PRIORITY NO: XX of XX

HARDWARE/ACTION: Wing Leading Edge Impact Detection System (WLEIDS)- Removal of Piezoelectric accelerometers

JUSTIFICATION (continued):

- N/A

SCHEMATIC:

- Uniaxial Piezoelectric Accelerometer
- Vendor: Endevco P/N 2221F
- .966”L x .6”W x .52”H
- 0.02 lbs (each)
- Typical Charge Sensitivity : 10 pC/g

Orbiter/Shuttle H/W Retention and Inspection Proposals after End of Shuttle Program (STS-LAST)

DCE/NSE/DIV: Nuss/Pipkins/EV PRT: D & C DIVISION PRIORITY NO: XX of XX

HARDWARE / ACTION DESCRIPTION:

- Switches
  - Obtain switches from KSC storage, and ship to JSC

JSC-ENGINEERING COSTS / IMPACTS:

	LOW	MED	HIGH
VEHICLE ACTION COSTS:	X		
ESTIMATED TRANSPORTATION COSTS:	X		
ESTIMATED ANNUAL MAINTENANCE COSTS:	X		
ESTIMATED STORAGE VOLUME REQ'D:	X		

Criteria 1 – Hardware / vehicle structure that should be inspected or analyzed given its significant benefit for increasing/advancing the understanding of space hardware environment.
Criteria 2 - Hardware needed in support of a future space vehicle architecture (including hardware that can be used for subsystem development and/or Qual testing); or hardware with remaining life that could be incorporated into EA sponsored flight/test systems. .

ACTION / TRANSPORTATION / STORAGE REQMTS / FUTURE SUPPORT:

- Action: No vehicle hardware removal is requested
  - Difficulty of H/W Removal: N/A – Parts are in spares
  - R&R Follow-on Actions: None
  - Vehicle Invasive Inspections Required: None
  - Specialized Expertise (KSC): Requires KSC techs to pack and ship to JSC.
  - Specialized Controls: None
- Transportation: Grd transportation from KSC to JSC
- Storage (JSC): JSC Bond/Stores with ambient environmental control (temperature and humidity). Data packs.
- Future Support (JSC):
  - JSC Support: See justification section.

JUSTIFICATION FOR ACTION – CRITERIA 2 :

Would like to retain this hardware for use in prototyping and mockup efforts in support of the Orion project.

Note: Justification continues on pg 2 if required.

Orbiter/Shuttle H/W Retention and Inspection Proposals after End of Shuttle Program (STS-LAST)

DCE/NSE/DIV: Nuss/Pipkins/EV PRT: D & C DIVISION PRIORITY NO: XX of XX

HARDWARE/ACTION: Obtain Switches from KSC storage and ship to JSC

SCHEMATIC:

Quantity per Vehicle	: 900 Approx.
Panel Locations	: Many panels in Orbiter
Original Manufacturer	: Armtek Industries
Current Supplier	: Applied Resources
Specification	: MC452-0102
Part Number	: ME452-0102-7XXX High Current
Part Number	: ME452-0102-8XXX Low Current
Repair Location	: Not repairable except for boots
.	.
Operating Force	: 1 Lb Min. and 8 Lb Max.
Contact Resistance	: 0.060 Ohm Max.

	HIGH CURRENT	LOW CURRENT
Short Circuit	95 Amp. Resistive	25 Amp. Resistive
Continuous Carry (1 Hr)	23 Amps. DC Resistive	10 Amps. DC Resistive
Current at 30 VDC	15 Amp. Resistive	2 Amp. Resistive
Current at 30 VDC	10 Amp. Inductive	0.5 Amp. Inductive
Current at 115 VAC	10 Amp. Resistive	2 Amp. Resistive
Current at 115 VAC	5 Amp. Inductive	1 Amp. Inductive

ES/Structural Engineering Division

STS-LAST Hardware Retention Proposal

Quad Charts

ES Summary Chart

- ***STS LAST Criteria 1: Knowledge Capture***
  - **Remove 4 tiles for emissivity and waterproofing investigation at ARC**
  - **Take composite core sample from OMS Pod and PLB Door**
  - **Remove/study tempered rear-facing windows with MMOD impacts**
  - **Perform upper surface corrosion sampling where RTV was used instead of Koropon**
  - **OV-104 wing leading edge spare core sampling for corrosion**
  - **Inspect low life aft fuselage thrust structure lug on OV-105**
  - **Remove and inspect wing root attachment bolts and fittings**
  - **Remove and inspect vertical tail-to-aft fuselage bolts and fittings**
  - **Perform Microscopy on Slip-Side Joggle of Unflown Spare RCC Panel 9**
  - **Perform IR Thermography on OV-103 RCC Left Wing Panels 1-5**
- ***STS LAST Criteria 1 and 2: Knowledge Capture and Future Use***
  - **Remove orbiter docking system (ODS) from each vehicle**
  - **Send flown windows and spares to JSC**
- ***Items requested as part of FMWG EA Artifacts action (not discussed in depth here)***
  - **Manipulator Retention Latch PDU**
  - **Middle Weight Longeron Latch Assembly**
  - **PLBD Switch Module**
  - **Payload Bay Door Centerline PDU**
  - **ET Door Centerline Latch PDU**
  - **Fwd Vent Door PDU**
  - **Air Data Probe Deployment PDU**
  - **RCC Panel 9**
  - **Window Cavity Conditioning System Assembly Line**
  - **Orbiter window glass (all items on list)**

Adam Gilmore, NASA/JSC/ES, 281-483-8436

Orbiter/Shuttle H/W Retention and Inspection Proposals after End of Shuttle Program (STS-LAST)

DCE/NSE/DIV: Gilmore/Snapp/ES PRT: TPS

HARDWARE / ACTION DESCRIPTION:

- Orbiter Tiles
  - Remove four orbiter tiles from body flap location which have seen the most flights (prefer OV-103, but any vehicle will suffice)

JSC-ENGINEERING COSTS / IMPACTS:

	LOW	MED	HIGH
VEHICLE ACTION COSTS:	X		
ESTIMATED TRANSPORTATION COSTS:	X		
ESTIMATED ANNUAL MAINTENANCE COSTS:	X		
ESTIMATED STORAGE VOLUME REQ'D:	X		

Criteria 1 – Hardware / vehicle structure that should be inspected or analyzed given its significant benefit for increasing/advancing the understanding of space hardware environment.
Criteria 2 - Hardware needed in support of a future space vehicle architecture (including hardware that can be used for subsystem development and/or Qual testing); or hardware with remaining life that could be incorporated into EA sponsored flight/test systems. .

ACTION / TRANSPORTATION / STORAGE REQMTS / FUTURE SUPPORT:

- Action: Hardware removal from vehicle
  - Difficulty of H/W Removal: Low difficulty – no special access required beyond normal OPF procedures
  - R&R Follow-on Actions: Replacement tile (or simulators) req'd to be installed after R&R (for Ferry Flt and display).
  - Vehicle Invasive Inspections Required: None
  - Specialized Expertise (KSC): Requires KSC tech support for R&R and KSC Logistics support for transportation from KSC to ARC.
  - Specialized Controls: None
- Transportation: Grd transportation from KSC to ARC
- Storage (JSC): ARC Bond/Stores with ambient environmental control
- Future Support (JSC): None
  - Ames Support: See justification section.

JUSTIFICATION FOR ACTION – CRITERIA 1 :

- Ship to Ames (2 tiles) to study how surface emissivity of the tiles may have changed over time
- Ship to Ames (2 tiles) to study waterproofing burnout and chemistry of the tile
- Important for future vehicle TPS designs which may have repeated re-entry exposure

Note: Justification continues on pg 2 if required.

Orbiter/Shuttle H/W Retention and Inspection Proposals after End of Shuttle Program (STS-LAST)

DCE/NSE/DIV: Gilmore/Snapp/ES PRT: TPS

HARDWARE/ACTION: Orbiter Tiles - Remove four orbiter tiles from body flap location which have seen the most flights

JUSTIFICATION (continued):

- Analysis of tiles with many years and cycles of the launch+entry+groundops environments provides a unique opportunity for understanding actual long-term operational TPS characteristics
- Insight into these characteristics, the change of surface emissivity, waterproofing burnout and tile chemistry will assist in the design of future multi-mission TPS by enabling more accurate assessments of actual operational TPS performance.

SCHEMATIC: Body Flap Location

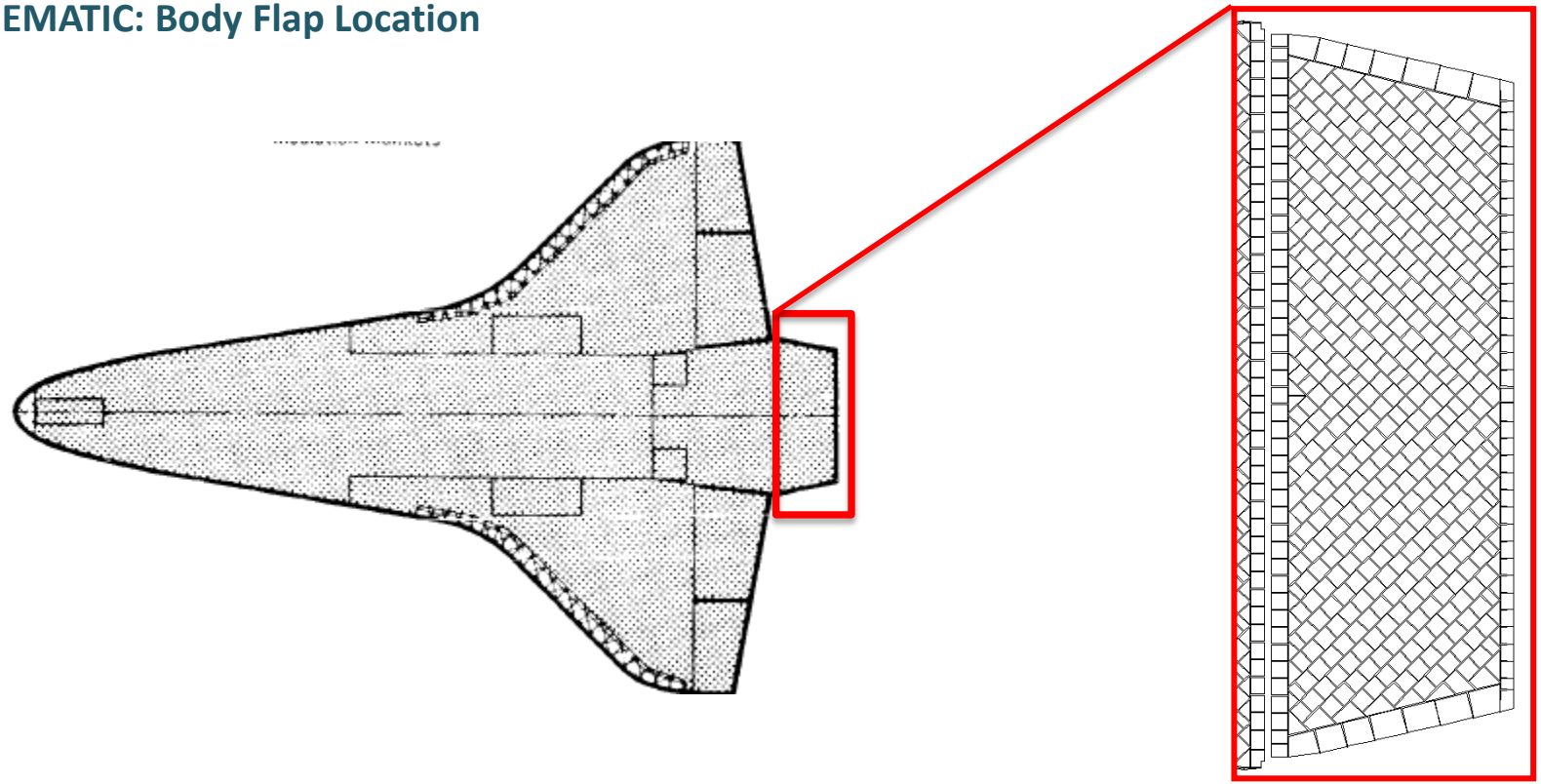

Orbiter/Shuttle H/W Retention and Inspection Proposals after End of Shuttle Program (STS-LAST)

DCE/NSE/DIV: Gilmore/Broughton/ES PRT: STR

HARDWARE / ACTION DESCRIPTION:

- Remove composite cores from OMS Pod and PLB Door areas to assess for degradation (prefer OV-103, but any vehicle will suffice)

JSC-ENGINEERING COSTS / IMPACTS:

	LOW	MED	HIGH
VEHICLE ACTION COSTS:		X	
ESTIMATED TRANSPORTATION COSTS:	X		
ESTIMATED ANNUAL MAINTENANCE COSTS:	X		
ESTIMATED STORAGE VOLUME REQ'D:	X		

Criteria 1 – Hardware / vehicle structure that should be inspected or analyzed given its significant benefit for increasing/advancing the understanding of space hardware environment.
Criteria 2 - Hardware needed in support of a future space vehicle architecture (including hardware that can be used for subsystem development and/or Qual testing); or hardware with remaining life that could be incorporated into EA sponsored flight/test systems. .

ACTION / TRANSPORTATION / STORAGE REQMTS / FUTURE SUPPORT:

- Action: Destructive Hardware Sampling
  - Difficulty of H/W Removal: Low difficulty – TPS removal followed by Facesheet & Core Plug samples are easy to obtain
  - R&R Follow-on Actions: Yes, requires adhesive core fill repair bonding
  - Vehicle Invasive Inspections Required: No
  - Specialized Expertise (KSC): Requires KSC tech support for core sampling.
  - Specialized Controls: None
- Transportation: Low, transport samples to lab (KSC or JSC)
- Storage (JSC): None
- Future Support (JSC): M&P review data and summarize results

JUSTIFICATION FOR ACTION – CRITERIA 1 :

- OMS and PLBD composite material allowable are utilized in humidity and thermal evaluation events
  - Mechanical properties may have been significantly reduced with time and flight cycles, natural and induced environments
    - Provides validation for humidity and core burst model
- Recent OMS Pod Composite Structure Damage Progression testing performed testing on samples at elevated temps and various stages of degradation
  - Associated reduction in mechanical properties were determined
    - Could provide a data source for degradation comparison of flight article samples
    - Valuable insight for composite mechanical properties degradation due to environments

Note: Justification continues on pg 2 if required.

Orbiter/Shuttle H/W Retention and Inspection Proposals after End of Shuttle Program (STS-LAST)

DCE/NSE/DIV: Gilmore/Broughton/ES PRT: STR

HARDWARE/ACTION: Composite core removal from OMS Pod and PLB Door

SCHEMATIC: OMS and PLBD Locations

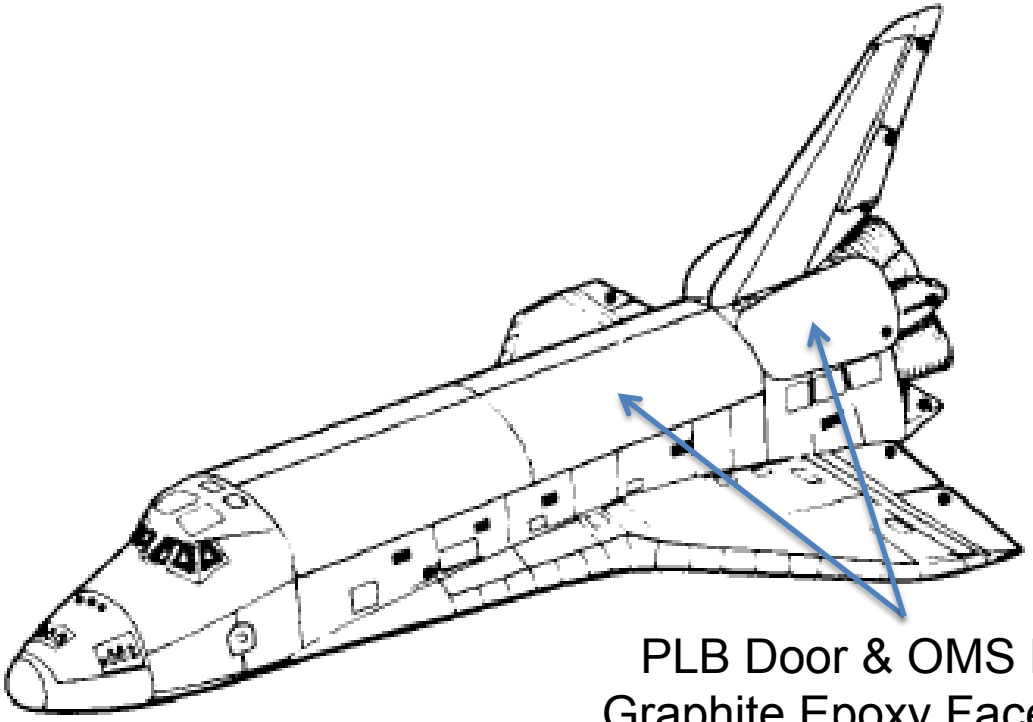

PLB Door & OMS Pods - Graphite Epoxy Face sheets with Nomex core

Orbiter/Shuttle H/W Retention and Inspection Proposals after End of Shuttle Program (STS-LAST)

DCE/NSE/DIV: Gilmore/Estes/ES PRT: Windows

HARDWARE / ACTION DESCRIPTION:

- Provide Orbiter impacted tempered glass panes to JSC (Rear Viewing panes, W9 & W10)
  - OV104 W9, 10, OV103 W9, OV105 W10

JSC-ENGINEERING COSTS / IMPACTS:

	LOW	MED	HIGH
VEHICLE ACTION COSTS:		X	
ESTIMATED TRANSPORTATION COSTS:		<$10 K	
ESTIMATED ANNUAL MAINTENANCE COSTS:	X		
ESTIMATED STORAGE VOLUME REQ'D:		X	

Criteria 1 – Hardware / vehicle structure that should be inspected or analyzed given its significant benefit for increasing/advancing the understanding of space hardware environment.
Criteria 2 - Hardware needed in support of a future space vehicle architecture (including hardware that can be used for subsystem development and/or Qual testing); or hardware with remaining life that could be incorporated into EA sponsored flight/test systems. .

ACTION / TRANSPORTATION / STORAGE REQMTS / FUTURE SUPPORT:

- Action: Hardware removal from vehicle
  - Difficulty of H/W Removal: Medium difficulty – no special access required, but not a "typical" window removal
  - R&R Follow-on Actions: Recommend leave primary pane in place, do not restore redundant pane
  - Vehicle Invasive Inspections Required: None
  - Specialized Expertise (KSC): Requires KSC tech support for R&R and KSC Logistics support for transportation from KSC to JSC.
  - Specialized Controls: None
- Transportation: already housed and stored in shipping containers, no additional shipping requirements are applicable. Ship to JSC.
- Storage (JSC): JSC Temporary Storage with ambient environmental control
- Future Support (JSC): minimal, as needed

JUSTIFICATION FOR ACTION – CRITERIA 2 :

- ES has a core competency within NASA in structural engineering with brittle materials for windows.
- ES has no experience in the residual strength effects of an MMOD impact on a tempered glass pane. These assets will provide that understanding, possibly creating insights to designing outer panes with tempered glass (lighter weight)
- Environmental effects on the exterior coating of the windows will also be assessed for lessons learned for future programs

Note: Justification continues on pg 2 if required.

Orbiter/Shuttle H/W Retention and Inspection Proposals after End of Shuttle Program (STS-LAST)

DCE/NSE/DIV: Gilmore/Estes/ES PRT: Windows

HARDWARE/ACTION: Provide Orbiter flown Thermal windowpanes to JSC (replace with spares)

SCHEMATIC:

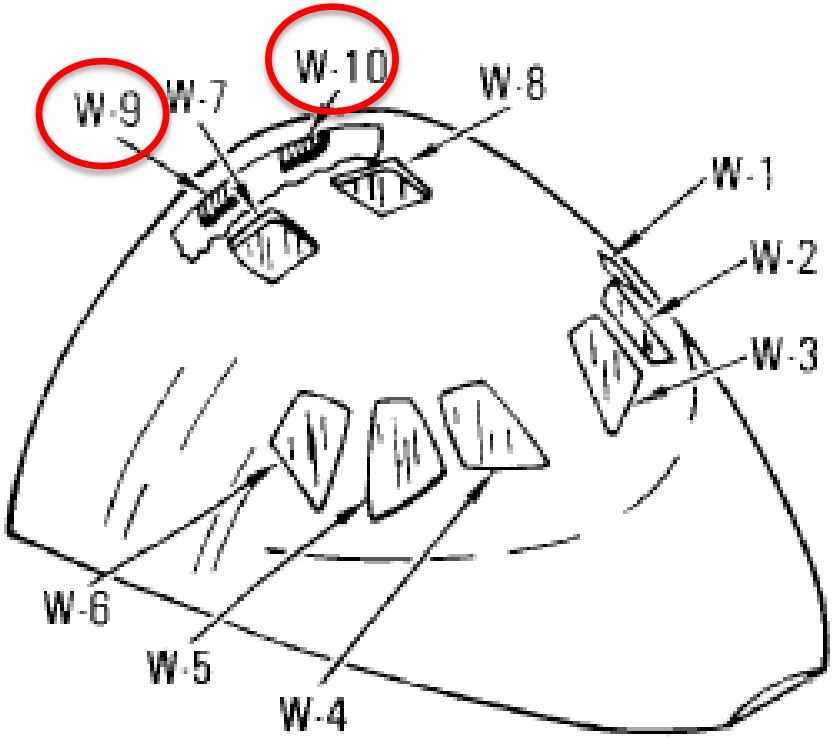

Orbiter/Shuttle H/W Retention and Inspection Proposals after End of Shuttle Program (STS-LAST)

DCE/NSE/DIV: Gilmore/Broughton/ES PRT: STR

HARDWARE / ACTION DESCRIPTION:

- Perform upper surface corrosion sampling in locations where RTV was used instead of the more traditional, Koropon. This can be performed on any single vehicle, but preference is all three vehicles.

JSC-ENGINEERING COSTS / IMPACTS:

	LOW	MED	HIGH
VEHICLE ACTION COSTS:		X	
ESTIMATED TRANSPORTATION COSTS:	X		
ESTIMATED ANNUAL MAINTENANCE COSTS:	X		
ESTIMATED STORAGE VOLUME REQ'D:	X		

Criteria 1 – Hardware / vehicle structure that should be inspected or analyzed given its significant benefit for increasing/advancing the understanding of space hardware environment.
Criteria 2 - Hardware needed in support of a future space vehicle architecture (including hardware that can be used for subsystem development and/or Qual testing); or hardware with remaining life that could be incorporated into EA sponsored flight/test systems. .

ACTION / TRANSPORTATION / STORAGE REQMTS / FUTURE SUPPORT:

- Action: TPS removal & Replacement Required
  - Difficulty of H/W Removal: Low difficulty – Requires removal of FRSI and Tile
  - R&R Follow-on Actions: None
  - Vehicle Invasive Inspections Required: Yes
  - Specialized Expertise (KSC): Requires KSC tech support for TPS R&R and Quality Inspection for corrosion.
  - Specialized Controls: None
- Transportation: None
- Storage (JSC): None
- Future Support (JSC): None

JUSTIFICATION FOR ACTION – CRITERIA 1 :

- 1995/1996 programmatic decision to allow large (~700 sq. ft.) acreage areas of FRSI to be bonded directly to upper wing surface and mid-fuselage sidewall aluminum skin without primer application
  - Applicable to OV-103, OV-104 and OV-105
  - Testing showed RTV provided a good barrier but there was an expected increase in risk by relying on RTV only
    - Koropon primer is the only active inhibitor in the system
- Corrosion Sampling CHIT was implemented to inspect for corrosion under TPS, FRSI and Heat sink
  - TPS is mostly complete for all vehicles
  - FRSI and Heat Sink inspections were lower priority so less work was performed in those areas
- Vehicle inspections would create a flight history to support original RTV testing for the issue of RTV only (no primer) as a corrosion barrier

Note: Justification continues on pg 2 if required.

Orbiter/Shuttle H/W Retention and Inspection Proposals after End of Shuttle Program (STS-LAST)

DCE/NSE/DIV: Gilmore/Broughton/ES PRT: STR

HARDWARE / ACTION DESCRIPTION:

- Perform core sampling on OV-104 wing leading edge spar

JSC-ENGINEERING COSTS / IMPACTS:

	LOW	MED	HIGH
VEHICLE ACTION COSTS:		X	
ESTIMATED TRANSPORTATION COSTS:	X		
ESTIMATED ANNUAL MAINTENANCE COSTS:	X		
ESTIMATED STORAGE VOLUME REQ'D:	X		

Criteria 1 – Hardware / vehicle structure that should be inspected or analyzed given its significant benefit for increasing/advancing the understanding of space hardware environment.
Criteria 2 - Hardware needed in support of a future space vehicle architecture (including hardware that can be used for subsystem development and/or Qual testing); or hardware with remaining life that could be incorporated into EA sponsored flight/test systems. .

ACTION / TRANSPORTATION / STORAGE REQMTS / FUTURE SUPPORT:

- Action: Cut out core samples from wing spar, repair cutout areas with bonded doublers.
  - Difficulty of H/W Removal: Low difficulty – Requires removal of RCC panels
  - R&R Follow-on Actions: None
  - Vehicle Invasive Inspections Required: Yes
  - Specialized Expertise (KSC): Requires KSC tech support for RCC R&R, core sampling and Quality Inspection for corrosion.
  - Specialized Controls: None
- Transportation: Low, transport samples to lab (KSC or JSC)
- Storage (JSC): None
- Future Support (JSC): M&P review data and summarize results

JUSTIFICATION FOR ACTION – CRITERIA 1 :

- Corrosion inspection of un-refurbished wing leading edge spar
  - Unique to OV-104
    - OV-103 and OV-105 WLE spars were stripped, inspected and refurbished due to excessive corrosion findings
    - OV-104 spar does not reveal a similar corrosion trend
      - Core sampling previously suggested as an option to not performing WLE inspections
- Potential to analyze the age and exposure effects on oldest known koropon primer in a known corrosion area
  - Real time aging and accelerated heat aging time are known to decrease koropon performance
    - OV-104's WLE koropon is 23 years old
    - Previous testing shows 30 year old koropon ineffective
    - Recommends refurbish every 7,5 years for harsh environments
- Sampling will supply flight data for koropon aging and environments understanding (i.e, benign or harsh & heat aging effects)
  - Primer degradation, adhesion to structure, and substructure metallurgical evaluation

Orbiter/Shuttle H/W Retention and Inspection Proposals after End of Shuttle Program (STS-LAST)

DCE/NSE/DIV: Gilmore/Broughton/ES PRT: STR

HARDWARE/ACTION: Wing Leading Edge (WLE) Spar Corrosion

SCHEMATIC: Wing Leading Edge Spar

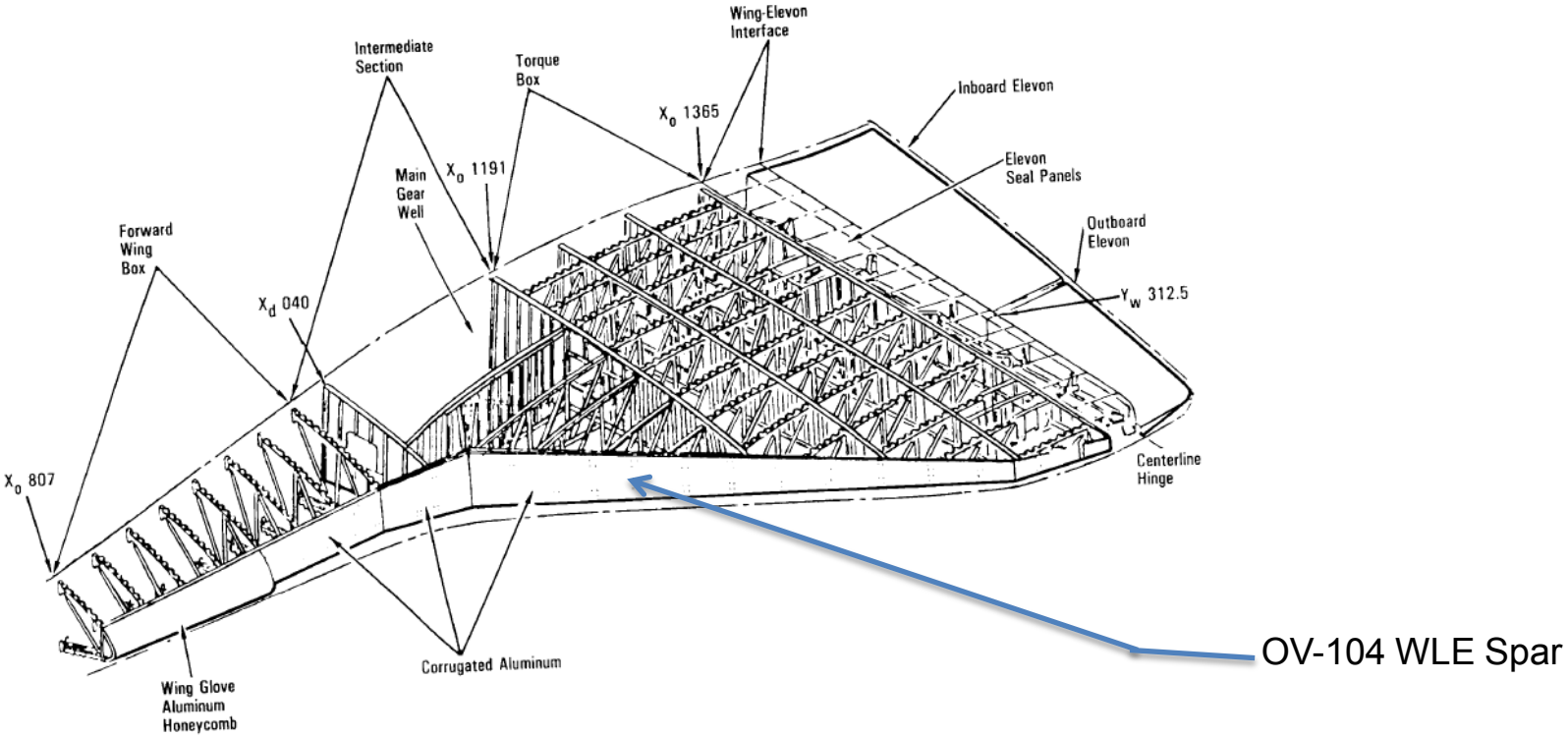

Orbiter/Shuttle H/W Retention and Inspection Proposals after End of Shuttle Program (STS-LAST)

DCE/NSE/DIV: Gilmore/Broughton/ES PRT: STR

HARDWARE / ACTION DESCRIPTION:

- Perform NDE inspection of critical lug in OV-105 aft fuselage thrust structure to inspect for flaws and validate assumptions for this low-life part

JSC-ENGINEERING COSTS / IMPACTS:

	LOW	MED	HIGH
VEHICLE ACTION COSTS:		X	
ESTIMATED TRANSPORTATION COSTS:	X		
ESTIMATED ANNUAL MAINTENANCE COSTS:	X		
ESTIMATED STORAGE VOLUME REQ'D:	X		

Criteria 1 – Hardware / vehicle structure that should be inspected or analyzed given its significant benefit for increasing/advancing the understanding of space hardware environment.
Criteria 2 - Hardware needed in support of a future space vehicle architecture (including hardware that can be used for subsystem development and/or Qual testing); or hardware with remaining life that could be incorporated into EA sponsored flight/test systems. .

ACTION / TRANSPORTATION / STORAGE REQMTS / FUTURE SUPPORT:

- Action: Hardware Remove & Reinstall for Access
  - Difficulty of H/W Removal: Med difficulty – Requires removal of V070-351558 Thrust Structure Strut to access critical lug, may be preloaded. (4.25" Dia., 45.4" long strut)
  - R&R Follow-on Actions: None Strut can be re-installed
  - Vehicle Invasive Inspections Required: Yes
  - Specialized Expertise (KSC): Requires KSC tech support for R&R and KSC NDE support for inspection.
  - Specialized Controls: None
- Transportation: None
- Storage (JSC): None
- Future Support (JSC): None

JUSTIFICATION FOR ACTION – CRITERIA 1 :

- OV-105 unique Part – Titanium forging
  - OV-103 & OV-104 are diffusion bonded Titanium parts
- Industry standard to inspect for flaws (3) times prior to critical crack size in part life
  - M/C is 50 for this titanium lug forging with crack initiating at edge of hole
    - M/C was originally 30 but was extended due to spectra updates using flight data
    - This interface was never inspected due to operational impacts
    - V30E00.020-C Internal Detailed Inspection of Visible areas
      - Critical crack size at hole is not visible
- Provides validation of fracture and durability reporting

Note: Justification continues on pg 2 if required.

Orbiter/Shuttle H/W Retention and Inspection Proposals after End of Shuttle Program (STS-LAST)

DCE/NSE/DIV: Gilmore/Broughton/ES PRT: STR

HARDWARE/ACTION: Low Life AFT Fuselage Thrust Structure

SCHEMATIC: Aft Thrust Structure Location

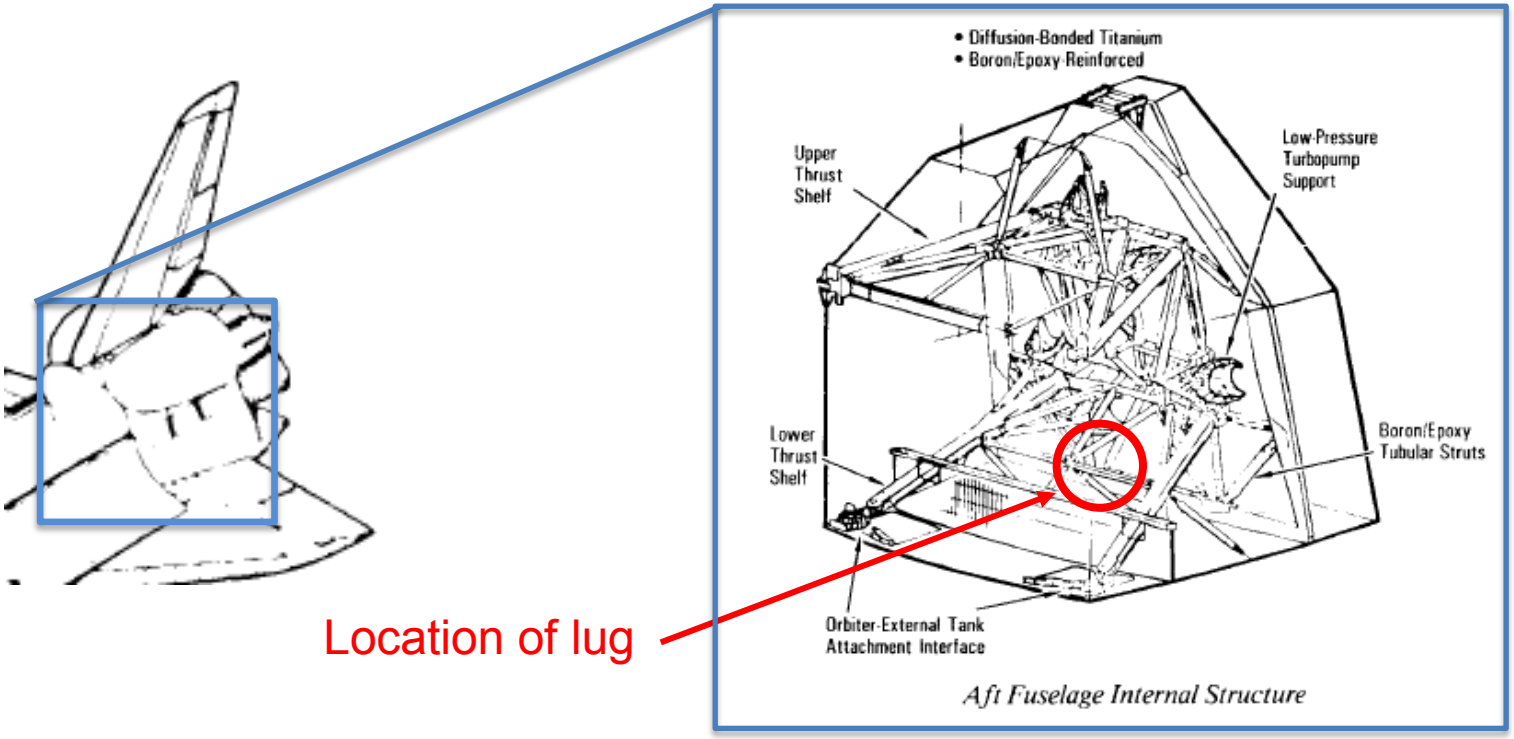

Orbiter/Shuttle H/W Retention and Inspection Proposals after End of Shuttle Program (STS-LAST)

DCE/NSE/DIV: Gilmore/Logan/ES PRT: STR

HARDWARE / ACTION DESCRIPTION:

- Wing Root Attachment Bolts and Fittings
  - Remove wing root attach bolts and inspect holes in carry-through attach fittings at wing main spars, upper and lower chords. Preference is OV-103, but any vehicle will suffice.

JSC-ENGINEERING COSTS / IMPACTS:

	LOW	MED	HIGH
VEHICLE ACTION COSTS:			x
ESTIMATED TRANSPORTATION COSTS:	X		
ESTIMATED ANNUAL MAINTENANCE COSTS:	X		
ESTIMATED STORAGE VOLUME REQ'D:	X		

Criteria 1 – Hardware / vehicle structure that should be inspected or analyzed given its significant benefit for increasing/advancing the understanding of space hardware environment.
Criteria 2 - Hardware needed in support of a future space vehicle architecture (including hardware that can be used for subsystem development and/or Qual testing); or hardware with remaining life that could be incorporated into EA sponsored flight/test systems. .

ACTION / TRANSPORTATION / STORAGE REQMTS / FUTURE SUPPORT:

- Action: Hardware removal from vehicle
  - Difficulty of H/W Removal: Medium difficulty – internal access req'd to center and outer wings at wing root
  - R&R Follow-on Actions: Replacement fasteners req'd to be installed after R&R and inspections (for Ferry Flt and display).
  - Vehicle Invasive Inspections Required:
    (1) Fastener hole ID inspections to include:
      a) hole ID condition inspection for corrosion, flaws, cracks, and other indications of distress. High freq hole eddy current procedures and equipment req'd.
      b) hole ID measurements to +/- .001" at min two orthogonal dia.
    (2) Inspect at following locations:
      a) wing root at x_0 = 1365, spar upper and lower chord fittings
      b) wing root at x_0 = 1307, spar lower chord fittings
      c) wing root at x_0 = 1191, spar upper and lower chord fittings
  - Specialized Expertise (KSC): Requires KSC tech support for R&R and inspections. KSC Logistics support for transportation from KSC to JSC.
  - Specialized Controls: Confined space entry, as required.

JUSTIFICATION FOR ACTION – CRITERIA 1 :

- Ship fasteners to JSC for detailed dimensional and condition inspections.
- Results of hole inspections in fittings to be evaluated with fastener inspection findings to determine, if possible, whether initial design, analysis, and maintenance approaches used were adequate, or adjusted accordingly, with respect to the following:
  a) safe life design with life limited parts
  b) materials selection
  c) corrosion abatement provisions
  d) fatigue improvement considerations
  e) considerations for temperature effects
  f) analytical analysis approaches
  g) structural test validations
  h) maintainability considerations
  i) methods and allowances for structural repairs
- Results of post project review of this critical structural joint could provide valuable insight toward the design of future vehicle structures which may be subjected to equivalent or more stringent environmental requirements.

Orbiter/Shuttle H/W Retention and Inspection Proposals after End of Shuttle Program (STS-LAST)

DCE/NSE/DIV: Gilmore/Logan/ES PRT: STR

HARDWARE/ACTION: Wing Root Attachment Bolts and Fittings

ACTION / TRANSPORTATION / STORAGE REQMTS / FUTURE SUPPORT:

Transportation: Ground transportation from KSC to JSC
Storage (JSC): none
Future Support (JSC): None

Ames Support: See justification section.

SCHEMATIC:

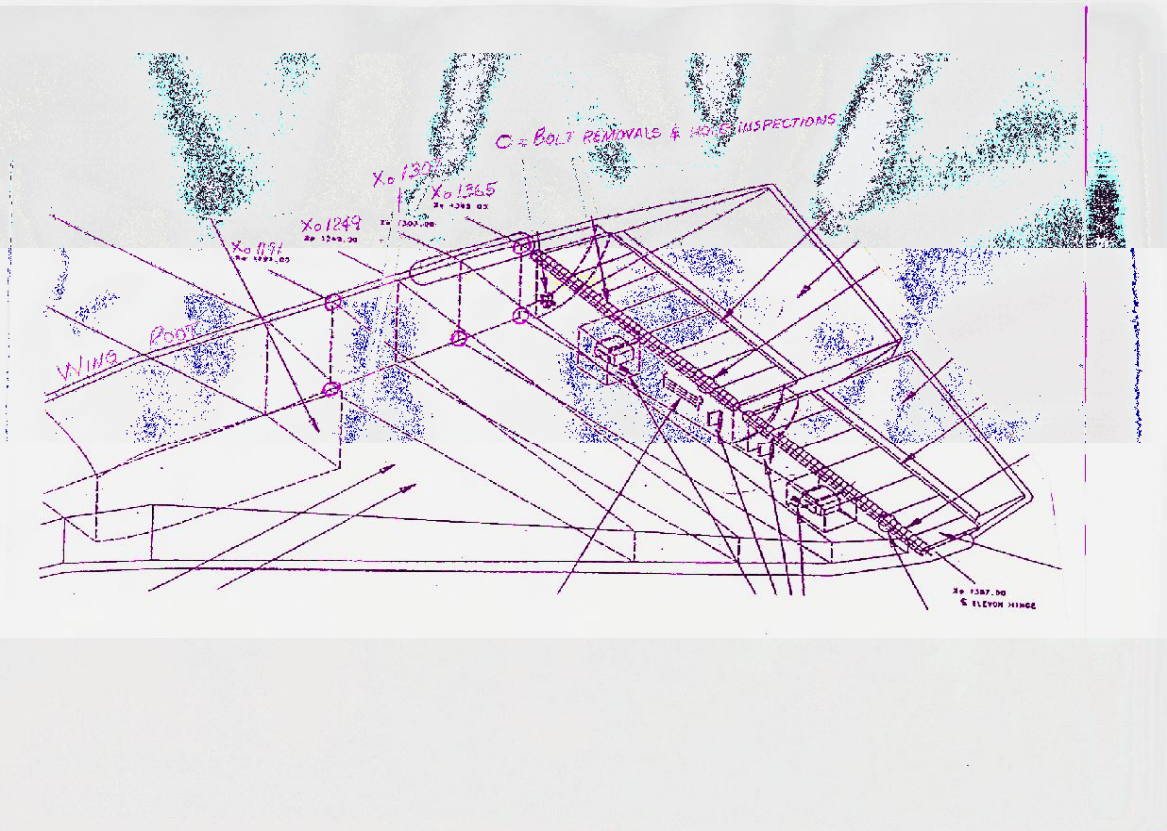

Orbiter/Shuttle H/W Retention and Inspection Proposals after End of Shuttle Program (STS-LAST)

DCE/NSE/DIV: Gilmore/Logan/ES PRT: STR

HARDWARE / ACTION DESCRIPTION:

- Vert Tail-to-Aft Fuselage Attachment Bolts and Fittings
  - Remove vert tail attach bolts and inspect holes in fwd and aft attach fittings. Preference is OV-103, but any vehicle will suffice.

JSC-ENGINEERING COSTS / IMPACTS:

	LOW	MED	HIGH
VEHICLE ACTION COSTS:			x
ESTIMATED TRANSPORTATION COSTS:	X		
ESTIMATED ANNUAL MAINTENANCE COSTS:	X		
ESTIMATED STORAGE VOLUME REQ'D:	X		

Criteria 1 – Hardware / vehicle structure that should be inspected or analyzed given its significant benefit for increasing/advancing the understanding of space hardware environment.
Criteria 2 - Hardware needed in support of a future space vehicle architecture (including hardware that can be used for subsystem development and/or Qual testing); or hardware with remaining life that could be incorporated into EA sponsored flight/test systems. .

ACTION / TRANSPORTATION / STORAGE REQMTS / FUTURE SUPPORT:

- Action: Hardware removal from vehicle
  - Difficulty of H/W Removal: Medium difficulty – May require access to interior ceiling of aft fuselage
  - R&R Follow-on Actions: Replacement fasteners req'd to be installed after R&R and inspections (for Ferry Flt and display).
  - Vehicle Invasive Inspections Required:
    (1) Fastener hole ID inspections to include:
    a) hole ID condition inspection for corrosion, flaws, cracks, and other indications of distress. High freq hole eddy current procedures and equipment req'd.
    b) hole ID measurements to +/- .001" at min two orthogonal dia.
    (2) Inspect at following locations:
    a) VT root at fwd attach LH & RH, upper and lower fittings
    b) VT root at aft attach x_0 = 1417.38 LH & RH, upper and lower ftgs
    c) VT root at aft attach x_0 = 1423.32 LH, upper and lower ftgs
    d) VT root at aft attach x_0 = 1429.27 RH, upper and lower ftgs
    e) VT root at aft attach x_0 = 1435.21 LH & RH, upper and lower ftgs
    NOTE: Aft attach upper fittings is VT pad-up skin

JUSTIFICATION FOR ACTION – CRITERIA 1 :

- Ship fasteners to JSC for detailed dimensional and condition inspections.
- Results of hole inspections in fittings to be evaluated with fastener inspection findings to determine, if possible, whether initial design, analysis, and maintenance approaches used were adequate, or adjusted accordingly, with respect to the following:
  a) safe life design with life limited parts
  b) materials selection
  c) corrosion abatement provisions
  d) fatigue improvement considerations
  e) considerations for temperature effects
  f) analytical analysis approaches
  g) structural test validations
  h) maintainability considerations
  i) methods and allowances for structural repairs
- Results of post project review of this critical structural joint could provide valuable insight toward the design of future vehicle structures which may be subjected to equivalent or more stringent environmental requirements.

Orbiter/Shuttle H/W Retention and Inspection Proposals after End of Shuttle Program (STS-LAST)

DCE/NSE/DIV: Gilmore/Logan/ES PRT: STR

HARDWARE/ACTION: Wing Root Attachment Bolts and Fittings

ACTION / TRANSPORTATION / STORAGE REQMTS / FUTURE SUPPORT:

- Transportation: Ground transportation from KSC to JSC
- Specialized Expertise (KSC): Requires KSC tech support for R&R and inspections. KSC Logistics support for transportation from KSC to JSC.
- Specialized Controls: Confined space entry, as required.
- Storage (JSC): none
- Future Support (JSC): None

Ames Support: See justification section.

SCHEMATIC:

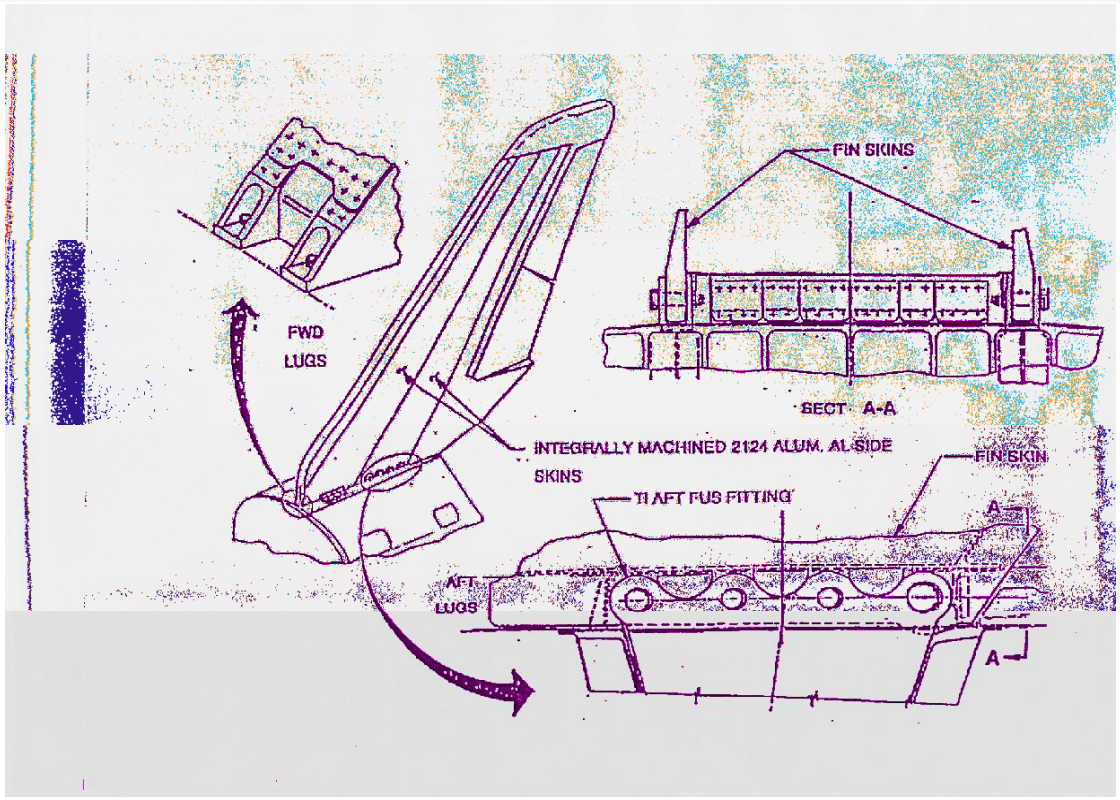

Orbiter/Shuttle H/W Retention and Inspection Proposals after End of Shuttle Program (STS-LAST)

DCE/RDE/CoRDE/DIV: Gilmore/Davis/Hagen/ES PRT: DSIPT ODS

HARDWARE / ACTION DESCRIPTION:

- Orbiter Docking Mechanisms
  - Remove three Orbiter Docking Mechanisms , Docking bases, Avionics and Control Panels

JSC-ENGINEERING COSTS / IMPACTS:

	LOW	MED	HIGH
VEHICLE ACTION COSTS:		X	
ESTIMATED TRANSPORTATION COSTS:	X		
ESTIMATED ANNUAL MAINTENANCE COSTS:		X	
ESTIMATED STORAGE VOLUME REQ'D:		X	

Criteria 1 – Hardware / vehicle structure that should be inspected or analyzed given its significant benefit for increasing/advancing the understanding of space hardware environment.
Criteria 2 - Hardware needed in support of a future space vehicle architecture (including hardware that can be used for subsystem development and/or Qual testing); or hardware with remaining life that could be incorporated into EA sponsored flight/test systems. .

ACTION / TRANSPORTATION / STORAGE REQMTS / FUTURE SUPPORT:

- Action: Hardware removal from vehicle
  - Difficulty of H/W Removal: Low difficulty – no special access required beyond normal OPF procedures. Procedure performed many times and well documented.
  - R&R Follow-on Actions: None
  - Vehicle Invasive Inspections Required: None
  - Specialized Expertise (KSC): Requires KSC tech support for Removal and KSC Logistics support for crating and storage at KSC pyro approved bonded storage.
  - Specialized Controls: None
- Transportation: None
- Storage (KSC): Pyro Bonded Stores with Environmental Control
- Future Support (KSC): Potential removal from storage

JUSTIFICATION FOR ACTION – CRITERIA 1 & 2 :

- Important for future vehicle docking systems design and development
- Potential reuse of assets for future flight programs
- Cadmium oxide and pyrotechnic safeing minimum requirement costs and difficulty comparable to removal and storage

Note: Justification continues on pg 2 if required.

Orbiter/Shuttle H/W Retention and Inspection Proposals after End of Shuttle Program (STS-LAST)

DCE/RDE/CoRDE/DIV: Gilmore/Davis/Hagen/ES PRT: DSIPT ODS

HARDWARE/ACTION: Remove three Orbiter Docking Mechanisms , Docking bases, Avionics and Control Panels

JUSTIFICATION (continued):

- Hardware will be inaccessible after Orbiter leaves OPF due to payload bay doors being closed

SCHEMATIC:

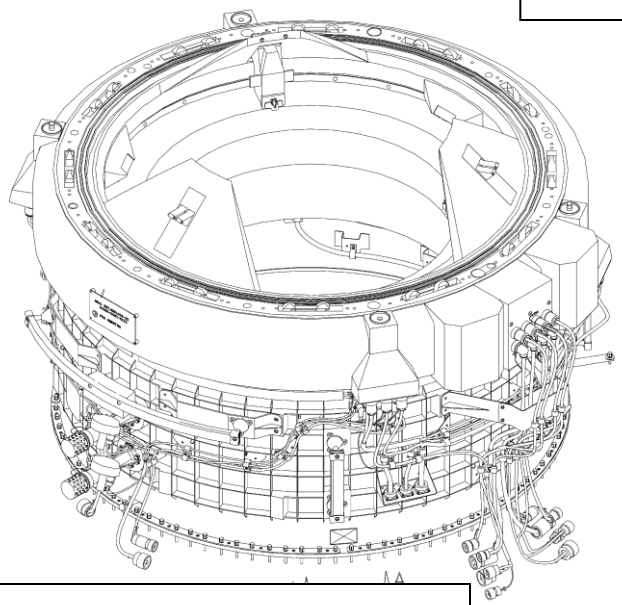

Docking Mechanism and Docking Base

Avionics Boxes

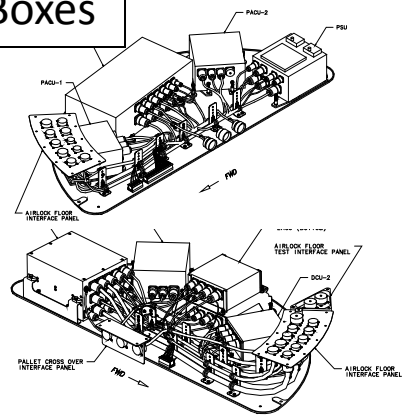

Control Panel

BEFORE

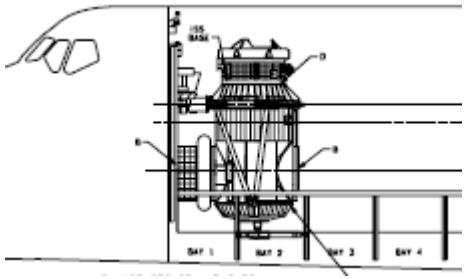

AFTER

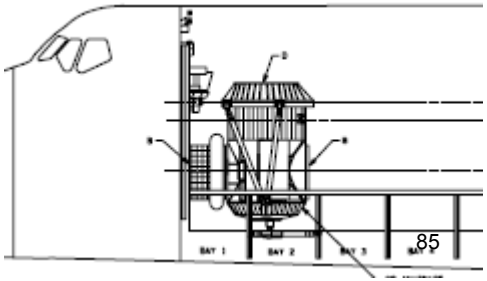

Orbiter/Shuttle H/W Retention and Inspection Proposals after End of Shuttle Program (STS-LAST)

DCE/NSE/DIV: Gilmore/Estes/ES PRT: Windows

HARDWARE / ACTION DESCRIPTION:

- Orbiter Windows
  - Provide Orbiter flown Thermal windowpanes to JSC (replace with spares)
  - Provide remaining orbiter windowpane spares, window assembly spares, and window seals and soft goods to JSC

JSC-ENGINEERING COSTS / IMPACTS:

	LOW	MED	HIGH
VEHICLE ACTION COSTS:		X	
ESTIMATED TRANSPORTATION COSTS:			>$10K
ESTIMATED ANNUAL MAINTENANCE COSTS:	X		
ESTIMATED STORAGE VOLUME REQ'D:		X	

Criteria 1 – Hardware / vehicle structure that should be inspected or analyzed given its significant benefit for increasing/advancing the understanding of space hardware environment.
Criteria 2 - Hardware needed in support of a future space vehicle architecture (including hardware that can be used for subsystem development and/or Qual testing); or hardware with remaining life that could be incorporated into EA sponsored flight/test systems. .

ACTION / TRANSPORTATION / STORAGE REQMTS / FUTURE SUPPORT:

- Action: Hardware removal from vehicle
  - Difficulty of H/W Removal: Low difficulty – no special access required beyond normal OPF procedures
  - R&R Follow-on Actions: Replace flown Thermal panes with unflown spares, High-for all panes, more than a week
  - Vehicle Invasive Inspections Required: None
  - Specialized Expertise (KSC): Requires KSC tech support for R&R and KSC Logistics support for transportation from KSC to JSC.
  - Specialized Controls: None
- Transportation: already housed and stored in shipping containers, no additional shipping requirements are applicable. Ship to JSC.
- Storage (JSC): JSC Temporary Storage with ambient environmental control
- Future Support (JSC): minimal, as needed

JUSTIFICATION FOR ACTION – CRITERIA 1&2

- ES has a core competency within NASA in structural engineering with brittle materials for windows.
- Training of the next generation of window/glass experts requires access to assets that can only be obtained from this program.
  - Flown assets will allow development and fine tuning of window designs for impact tolerance
- These assets are also being deployed to further develop an engineering understanding for other programs (e.g. motor plume exposure testing).

Note: Justification continues on pg 2 if required.

Orbiter/Shuttle H/W Retention and Inspection Proposals after End of Shuttle Program (STS-LAST)

DCE/NSE/DIV: Gilmore/Estes/ES PRT: Windows

HARDWARE/ACTION: Provide Orbiter flown Thermal windowpanes to JSC (replace with spares)

JUSTIFICATION (continued):

- Flown assets provide unique, natural hypervelocity impacts that cannot be easily obtained otherwise. No other existing space program will be able to provide assets with these features.
- The unflown assets provide a clean slate of material that can be used for a variety of purposes, from developing an understanding of the optical characteristics of the glass on various scientific instruments to understanding the effects of various types of damages on the strength of the material.

SCHEMATIC:

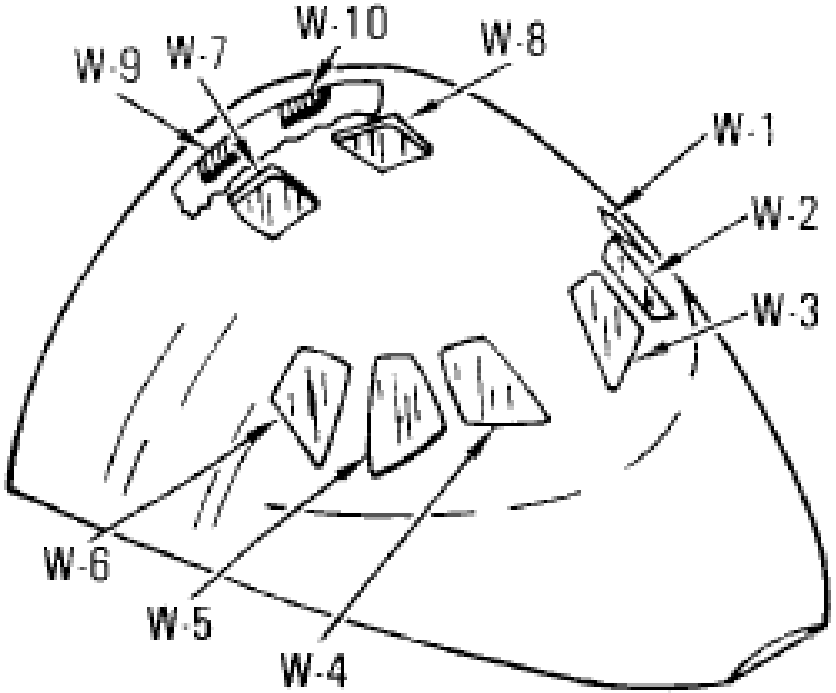

Orbiter/Shuttle H/W Retention and Inspection Proposals after End of Shuttle Program (STS-LAST)

DCE/NSE/DIV: Gilmore/Rodriguez/ES PRT: LESS

HARDWARE / ACTION DESCRIPTION:

- Orbiter LESS
  - Perform rough cut of slip-side joggle of spare RCC panel 9 (S/N SPRP09L013)
  - Perform microscopy at GRC on rough cut specimen

JSC-ENGINEERING COSTS / IMPACTS:

	LOW	MED	HIGH
VEHICLE ACTION COSTS:	n/a		
ESTIMATED TRANSPORTATION COSTS:	X		
ESTIMATED ANNUAL MAINTENANCE COSTS:	X		
ESTIMATED STORAGE VOLUME REQ'D:	X		

Criteria 1 – Hardware / vehicle structure that should be inspected or analyzed given its significant benefit for increasing/advancing the understanding of space hardware environment.
Criteria 2 - Hardware needed in support of a future space vehicle architecture (including hardware that can be used for subsystem development and/or Qual testing); or hardware with remaining life that could be incorporated into EA sponsored flight/test systems. .

ACTION / TRANSPORTATION / STORAGE REQMTS / FUTURE SUPPORT:

- Action: Destructive sampling of RCC Spare
  - Difficulty of H/W Removal: Low difficulty – already stored in a crate in logistics
  - R&R Follow-on Actions: None
  - Vehicle Invasive Inspections Required: None
  - Specialized Expertise (KSC): Requires KSC tech support for rough cuts and KSC Logistics support for transportation from KSC to GRC.
  - Specialized Controls: None
- Transportation: Ship rough cut material to GRC.
- Storage (GRC): GRC Temporary Storage with ambient environmental control
- Future Support (GRC): Microscopy

JUSTIFICATION FOR ACTION – CRITERIA 1

- As part of the SiC Liberation Root Cause Investigation, the role of manufacturing in developing limited material separations at the coating interface was inferred but never proven
- Spare Panel 9 (SPRP09L013) had infrared thermography performed at multiple steps during its manufacture
  - Several locations on the panel showed regions with potential material separations
- Microscopy of this particular unflown spare panel would confirm the presence of material separations

Note: Justification continues on pg 2 if required.

Orbiter/Shuttle H/W Retention and Inspection Proposals after End of Shuttle Program (STS-LAST)

DCE/NSE/DIV: Gilmore/Rodriguez/ES PRT: LESS

HARDWARE/ACTION: Perform Microscopy on Slip-Side Joggle of Spare RCC Panel 9 (S/N SPRP09L013)

JUSTIFICATION (continued):

- This information would be beneficial to future space craft developing composite structures which have coatings with differential thermal expansion

SCHEMATIC:

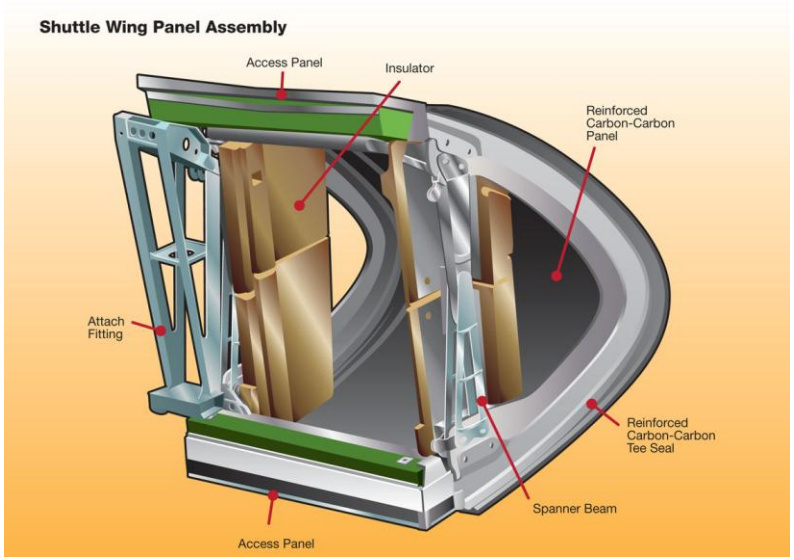

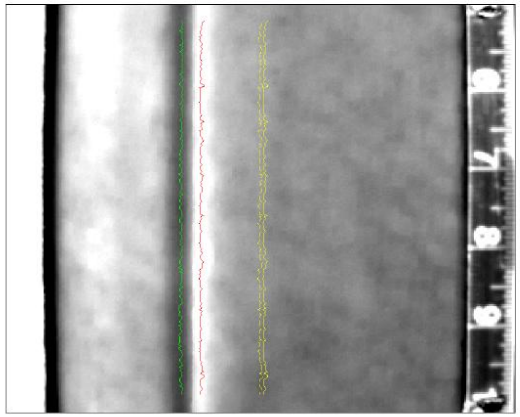

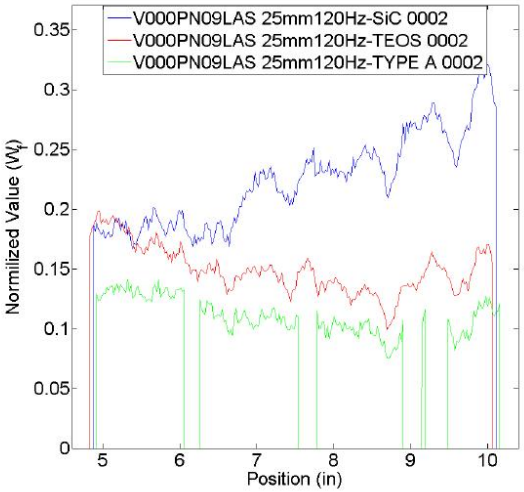

Orbiter/Shuttle H/W Retention and Inspection Proposals after End of Shuttle Program (STS-LAST)

DCE/NSE/DIV: Gilmore/Rodriguez/ES PRT: LESS

HARDWARE / ACTION DESCRIPTION:

- Orbiter LESS
  - Perform IR Thermography on OV-103 RCC Left Wing Panels 1-5
    - Any vehicle will suffice, but OV-103 is strongly preferred

JSC-ENGINEERING COSTS / IMPACTS:

	LOW	MED	HIGH
VEHICLE ACTION COSTS:		x	
ESTIMATED TRANSPORTATION COSTS:	n/a		
ESTIMATED ANNUAL MAINTENANCE COSTS:	n/a		
ESTIMATED STORAGE VOLUME REQ'D:	n/a		

Criteria 1 – Hardware / vehicle structure that should be inspected or analyzed given its significant benefit for increasing/advancing the understanding of space hardware environment.
Criteria 2 - Hardware needed in support of a future space vehicle architecture (including hardware that can be used for subsystem development and/or Qual testing); or hardware with remaining life that could be incorporated into EA sponsored flight/test systems. .

ACTION / TRANSPORTATION / STORAGE REQMTS / FUTURE SUPPORT:

- Action: Collect NDE on OV-103 RCC LH Panels 1-5
  - Difficulty of H/W Removal: Low difficulty – no special access required beyond normal OPF procedures
  - R&R Follow-on Actions: None
  - Vehicle Invasive Inspections Required: None
  - Specialized Expertise (KSC): Requires KSC tech support for removing and re-installation and KSC NDE support
  - Specialized Controls: None
- Transportation: none
- Storage : none
- Future Support: none

JUSTIFICATION FOR ACTION – CRITERIA 1

- As part of the SiC Liberation Root Cause Investigation, IR Thermography was performed on numerous panels in the fleet
- However, thermography was limited to RCC panels 6 thru19, which are largely refurbished panels
  - Panels 1-5 were not included in the inspection due to access limitations
- Thermography on flown non-refurbished panels would help our understanding of the root cause for SiC liberation

Note: Justification continues on pg 2 if required.

Orbiter/Shuttle H/W Retention and Inspection Proposals after End of Shuttle Program (STS-LAST)

DCE/NSE/DIV: Gilmore/Rodriguez/ES PRT: LESS

HARDWARE/ACTION: Perform IR Thermography on OV-103 RCC Left Wing Panels 1-5

JUSTIFICATION (continued):

- This information would be beneficial to future space craft developing composite hot structures

SCHEMATIC:

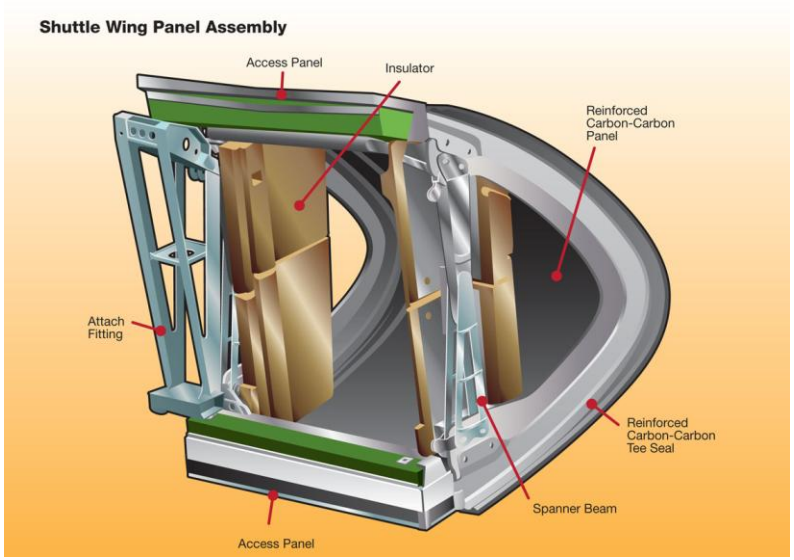

EC/Crew and Thermal Systems Division

STS-LAST Hardware Retention Proposal

Hardware Retention Criteria and Prioritization Guidelines

- Criteria 1: Knowledge Capture
  - Hardware/vehicle structure that should be inspected or analyzed given its significant benefit for increasing/advancing the understanding of space hardware environment
  - These are to be prioritized according to the following guidelines:
    - Do not fully understand hardware performance in flight environment
    - Evaluation can be used to verify design assumptions, analysis, and simulation, material selection
    - Fleet leader hardware
      - Aging hardware, exposure, degradation, cycles.
      - Any compatibility effects with fluids, environment
    - Hardware that has never been inspected
- Criteria 2: Future Use
  - Hardware needed in support of a future space vehicle architecture, including hardware that can be used for subsystem development and/or Qual testing; or hardware with remaining life that could be incorporated into EA-sponsored flight test systems.
  - These are to be prioritized according to the following guidelines:
    - Hardware Demand - Currently active programs that are requesting hardware
    - Anticipate that future programs will want hardware/long lead procurement
    - Hardware cannot be found anywhere else, unique design
    - No vendor available/Could be repurchased if vendor is available
    - Simple/Easy to acquire and ship
    - Spare life testing/Useful for qual life time testing/Include off-limit testing
      - Aid in understanding given designs for future missions

Hardware Retention for Knowledge Capture Benefit: Low

- Potential benefit for increasing or advancing the understanding of space hardware environment for ECLSS technology is low:
  - Orbiter ECLSS hardware have met all designed performance requirements.
    - Mature technologies at subcomponent levels
    - Through failure analyses, design modifications, performance verification tests and system redundancies, ECLSS has been able to address all failures to date without accepting significant risk in safety or mission success.
    - M&P concluded that NDE or other non-invasive inspections of ECLSS hardware would be of no significant value for systems that are performing per specifications.

Hardware Retention for Knowledge Capture Benefit: Low

- Potential benefit for increasing or advancing the understanding of space hardware environment for ECLSS technology is low:
  - New design architecture is expected to be significantly different from Orbiter design in most respects
    - Performance requirements
    - Technology application
    - Operational life

Hardware Retention for Future Use Benefit: Low

- Potential benefit of keeping ECLSS hardware to support future space vehicle design testing program, including EA-sponsored flight/test systems, is low:
  - Unique, Orbiter-specific hardware design configuration will likely not add value to anticipated development or qualification test programs in the forseeable future.
    - ECLSS hardware designs are optimized to vehicle requirements.
    - New vehicle design specifications are unlikely to utilize legacy hardware.

Conclusion

- EC is not recommending retention of any Orbiter hardware based on this effort's stated criteria
  - We share the universal technical curiosity regarding the conditions of our hardware at the end of the Space Shuttle Program.
  - However, given real budget and technical resource limitations, the benefit of efforts to obtain, maintain and study the hardware (with respect to ECLSS technology advancement) is marginal at best.

Recommendations

- Obtain selected spare hardware for engineering display and/or educational/training aids.
  - Having the actual hardware (Flash Evaporator System, Hydrogen Separators, etc.) available for hands-on examination is invaluable to the understanding of the design.
- Negotiate with new Orbiter owners for hardware access agreement or collaborative arrangement for future study
  - Maintaining ECLSS hardware in a system-level configuration may provide future designers with insight into system design rationale .

Hardware for Display/Education

- If the opportunity exists to retain flight or spare hardware for historical display and/or personnel training, EC would like to acquire the following hardware:
  - Flash Evaporator System
  - Cold Plates (Aluminum and Stainless Steel)
  - Hydrogen Separator
  - Heat Exchanger
  - Humidity Separator
  - Lithium Hydroxide Cartridge
  - Ammonia Boiler System

Hardware for Display/Education

- Water Coolant Loop Pump Package
- Potable Water Tank
- Radiator Flow Control Assembly
- Emergency Egress Slide
- Sky Genies
- Light Weight Seats

- List may be revised to include additional hardware.
- Acquisition and storage planning has not been pursued yet, and would have to be done if/when hardware availability is finalized.

EG/Aeroscience and Flight Mechanics Division

STS-LAST Hardware Retention Proposal

Provide BLT and Catalytic Coating DTO Data

DCE/NSE/DIV: Ruppert/Anderson/EG **PRT:** Entry Aeroheating EG Priority NO: 1 of 3

HARDWARE / ACTION DESCRIPTION:

- Provide data from BLT and Catalytic Coating DTO
  - Requires all MADS surface thermocouple data
  - Requires creation of Best Estimated Trajectory (BET)
- For OV-103 and OV-105 only

JSC-ENGINEERING COSTS / IMPACTS:

	LOW	MED	HIGH
VEHICLE ACTION COSTS:	X		
ESTIMATED TRANSPORTATION COSTS:	X		
ESTIMATED ANNUAL MAINTENANCE COSTS:	None Required		
ESTIMATED STORAGE VOLUME REQ'D:	None Required		

Criteria 1 – Hardware / vehicle structure that should be inspected or analyzed given its significant benefit for increasing/advancing the understanding of space hardware environment.
Criteria 2 - Hardware needed in support of a future space vehicle architecture (including hardware that can be used for subsystem development and/or Qual testing); or hardware with remaining life that could be incorporated into EA sponsored flight/test systems. .

ACTION / TRANSPORTATION / STORAGE REQMTS / FUTURE SUPPORT:

- Action: Provide MADS surface TC data & Create BET
  - Difficulty of H/W Removal: None
  - R&R Follow-on Actions: None
  - Vehicle Invasive Inspections Required: None
  - Specialized Expertise (USA/Boeing): Requires USA/Boeing support to create BET and provide MADS data
    - BET creation typically 2 weeks when expedited
  - Specialized Controls: None
- Transportation: None
- Storage: electronic data archiving only
- Future Support (JSC):
  - Data reduction and interpretation of the performance of the BLT and catalytic coating DTO.

JUSTIFICATION FOR ACTION – CRITERIA 1,2:

- The SSP has committed significant resources to obtain BLT and catalytic coating flight data for a 0.5" protuberance
- Data from DTOs have the potential to effect future vehicle designs
- If the thermocouple data and BET are not recovered or provided, the BLT and catalytic coating DTO are of limited value
- USA/Boeing have the expertise and tools needed to quickly and efficiently provide the MADS data and to create the BET
  - BET creation within EA would take a significant amount of time

Note: Justification continues on pg 2 if required.

BLT and Catalytic Coating DTO Data Reporting

DCE/NSE/DIV: Ruppert/Anderson/EG **PRT:** Entry Aeroheating EG Priority NO: 3 of 3

HARDWARE / ACTION DESCRIPTION:

- Document the design and implementation of the BLT and catalytic coating DTO and provide first-cut analysis of results
  - Reporting for STS-133 and 134 (flights with BLT DTO)

JSC-ENGINEERING COSTS / IMPACTS:

	LOW	MED	HIGH
VEHICLE ACTION COSTS:	X		
ESTIMATED TRANSPORTATION COSTS:	X		
ESTIMATED ANNUAL MAINTENANCE COSTS:	None Required		
ESTIMATED STORAGE VOLUME REQ'D:	None Required		

Criteria 1 – Hardware / vehicle structure that should be inspected or analyzed given its significant benefit for increasing/advancing the understanding of space hardware environment.
Criteria 2 - Hardware needed in support of a future space vehicle architecture (including hardware that can be used for subsystem development and/or Qual testing); or hardware with remaining life that could be incorporated into EA sponsored flight/test systems. .

ACTION / TRANSPORTATION / STORAGE REQMTS / FUTURE SUPPORT:

- Action: Provide documentation of BLT and catalytic coating DTO activities
  - Difficulty of H/W Removal: None
  - R&R Follow-on Actions: None
  - Vehicle Invasive Inspections Required: None
  - Specialized Expertise (USA/Boeing): USA/Boeing support to document design, implementation, and flight data from DTO activities
  - Specialized Controls: None
- Transportation: None
- Storage: electronic data archiving only
- Future Support (JSC):
  - Compilation of data, interpretation, and documentation into a NASA TM for future reference

JUSTIFICATION FOR ACTION – CRITERIA 1,2:

- The SSP has committed significant resources to obtain BLT and catalytic coating flight data for 0.5" protuberance
- Data from DTOs have the potential to effect future vehicle designs
- The design and implementation of the experiments have not been adequately documented
- USA/Boeing have the expertise and knowledge to quickly and efficiently document

Note: Justification continues on pg 2 if required.

Orbiter Surface Geometry Scans

DCE/NSE/DIV: Ruppert/Anderson&Gomez/EG **PRT:** Entry Aeroheating & Ascent Aero EG Priority NO: 2 of 3

HARDWARE / ACTION DESCRIPTION:

- Digital Scanning and Data Processing of Orbiters (OV-103, -104, and -105)
  - Utilize outer mold line digital scanning process and techniques developed in support of BLT FE
  - Capture windward surface to high resolution
    - <0.060" between data points
  - Capture leeward surface to coarse resolution
    - ~1" between data points

JSC-ENGINEERING COSTS / IMPACTS:

	LOW	MED	HIGH
VEHICLE ACTION COSTS:	X		
ESTIMATED TRANSPORTATION COSTS:	X		
ESTIMATED ANNUAL MAINTENANCE COSTS:	None Required		
ESTIMATED STORAGE VOLUME REQ'D:	None Required		

Criteria 1 – Hardware / vehicle structure that should be inspected or analyzed given its significant benefit for increasing/advancing the understanding of space hardware environment.
Criteria 2 - Hardware needed in support of a future space vehicle architecture (including hardware that can be used for subsystem development and/or Qual testing); or hardware with remaining life that could be incorporated into EA sponsored flight/test systems. .

ACTION / TRANSPORTATION / STORAGE REQMTS / FUTURE SUPPORT:

- Action: Vehicle preparation and digital scanning
  - Difficulty of H/W Removal: Low difficulty – no special access required beyond normal OPF procedures. Flight like state desired for OML. Could be performed prior to completion of STS-LAST mission.
  - R&R Follow-on Actions: No hardware follow-on required
  - Vehicle Invasive Inspections Required: None
  - Specialized Expertise (KSC): Requires KSC TPS tech support for preparation for flight like configuration, requires USA Optics support to perform digital scans and data processing.
  - Specialized Controls: None
- Transportation: None required
- Storage: electronic data archiving only
- Future Support (JSC):
  - Computational support to develop CFD grid system(s) and perform aerodynamic and aerothermodynamic simulations.

JUSTIFICATION FOR ACTION – CRITERIA 1 :

- High Quality Orbiter OML does not exist in electronic format
  - Current CAD has known discrepancies on the order of 1" in certain areas
- Aerodynamic CFD analyses will lead to validation of bent airframe aerodynamic effects for future vehicles
- Aerothermodynamic CFD analyses will lead to validation of boundary layer transition prediction with rapidly maturing high fidelity prediction methods for distributed roughness (fleet data) and discrete roughness (BLT FE data)

Note: Justification continues on pg 2 if required.

NESC/NASA Engineering and Safety Center

STS-LAST Hardware Retention Proposal

Quad Charts

EA Shuttle Hardware Retention Effort
Post STS-LAST

Top List from NESC (not in order of priority)

Category 1: Knowledge Capture

1. Two (adjacent) Wing Leading Edge Panels with adjoining T-seal and support hardware (preferably a panel from 7 -11)
2. Flash Evaporator System topping spray valve/nozzle assemblies (4 minimum)
3. In-place borescope inspection of the ECLSS Ammonia Tanks and remove/ship flown relief valve, iso valve and flow control valve from the same system
4. Two spare hydrogen separators
5. Two stainless steel, long life cold plates from 2 separate avionics bays from OV-103

Category 2: Future Use

1. Carbon COPV's
   - Flight: MC282-0082-0210, s/n -003
   - Spares: MC282-0082-0209, s/n's -006, -007 & -010
2. Rotational Hand Controller
   - Flight or Spare: MC621-0043-3047
3. Translational Hand Controller
   - Flight or Spare: MC621-0043-3140
4. Tiles, 12 flown/12 spare, same p/n's
5. MLI blankets, 1 flown, 1 not flown; roughly 3'x3' section
6. AFRSI blankets, 1 flown, 1 not flown; roughly 3'x3' section
7. FRSI blankets, 1 flown, 1 not flown; roughly 3'x3' section

Comment:

- The Technical Fellows have reviewed the proposed JSC Engineering lists and have no objections as written.

EA Shuttle Hardware Retention Effort
Post STS-LAST

Top List from NESC in Support of MLAS Project

Category 2: Future Use

1. Two PMS Control Panel 4 (P/N V070-415752-001), including:
   - Filter (P/N ME286-0056-0001)
   - Iso Valves (P/N MC284-0403-0001)
   - 750 psi Regulator (P/N MC284-0533-0006)
   - Relief Valve (P/N MC284-0398-0004)
   - Check Valve (P/N ME-284-0472-0004)
   - High Pressure Sensor (P/N TBD) if available
   - Low Pressure Sensor (P/N TBD) if available
   - Rope vib. isolators, mech fittings, elec. connectors, etc.

2. One Low Pressure Cross Over Valve (P/N MC284-0403-0003)

3. Two 4.7 ft3 COPV (P/N MC282-0082-0010), including:
   - Internal Temp Sensor (P/N ME449-0156-0002)
   - Mounting Brackets/Struts (P/N TBD)

4. Fleet leader, Primary RCS engines

Orbiter/Shuttle H/W Retention and Inspection Proposals after End of Shuttle Program (STS-Last)

TF: Prosser/Piascik TDT: NDE/Materials PRIORITY NO: XX

HARDWARE / ACTION DESCRIPTION:

- Remove/Supply Carbon COPV's:
  - Flight: MC282-0082-0210, s/n -003
  - Spares: MC282-0082-0209, s/n's -006, -007 & -010
  - Provide all hardware data packages

NESC ENGINEERING COSTS / IMPACTS:

	LOW	MED	HIGH
VEHICLE ACTION COSTS:		X	
ESTIMATED TRANSPORTATION COSTS:		X	
ESTIMATED ANNUAL MAINTENANCE COSTS:		X	
ESTIMATED STORAGE VOLUME REQ'D:		X	

Criteria 1 – Hardware / vehicle structure that should be inspected or analyzed given its significant benefit for increasing/advancing the understanding of space hardware environment.
Criteria 2 - Hardware needed in support of a future space vehicle architecture (including hardware that can be used for subsystem development and/or Qual testing); or hardware with remaining life that could be incorporated into EA sponsored flight/test systems. .

ACTION / TRANSPORTATION / STORAGE REQMTS / FUTURE SUPPORT:

- Action:
  - Remove MC282-0082-0210, s/n -003 COPV from OV-104
  - Supply Spares: MC282-0082-0209, s/n's -006, -007 & -010 from inventory
- Hardware removal from vehicle
  - Difficulty of H/W Removal: Medium difficulty – special equipment
  - R&R Follow-on Actions: None
  - Vehicle Invasive Inspections Required: None
  - Specialized Expertise (KSC): Requires KSC tech support for R&R and KSC Logistics support for transport to LaRC.
  - Specialized Controls: None
- Transportation: Ground transportation from KSC to WSTF
- Storage: Blanket pressure desired, not required
- Future Support: None

JUSTIFICATION FOR ACTION – CRITERIA 2:

- The plan is to perform destructive burst and pressure cycle tests to validate mechanics models

Note: Justification continues on pg 2 if required.

Orbiter/Shuttle H/W Retention and Inspection Proposals after End of Shuttle Program (STS-Last)

TF: Raju TDT: Structures PRIORITY NO: XX

HARDWARE / ACTION DESCRIPTION:

- 2 (adjacent) Wing Leading Edge Panels with adjoining T-seal and support hardware (preferably a panel from 7 -11), with data pack
- Removal and ship to LaRC

NESC ENGINEERING COSTS / IMPACTS:

	LOW	MED	HIGH
VEHICLE ACTION COSTS:		X	
ESTIMATED TRANSPORTATION COSTS:	X		
ESTIMATED ANNUAL MAINTENANCE COSTS:	X		
ESTIMATED STORAGE VOLUME REQ'D:	X		

Criteria 1 – Hardware / vehicle structure that should be inspected or analyzed given its significant benefit for increasing/advancing the understanding of space hardware environment.
Criteria 2 - Hardware needed in support of a future space vehicle architecture (including hardware that can be used for subsystem development and/or Qual testing); or hardware with remaining life that could be incorporated into EA sponsored flight/test systems. .

ACTION / TRANSPORTATION / STORAGE REQMTS / FUTURE SUPPORT:

- Action: Hardware removal from vehicle
  - Difficulty of H/W Removal: Low difficulty –handling instructions already exist
  - R&R Follow-on Actions: Replacement RCC/T-seal (or simulators) req'd to be installed after R&R (for display).
  - Vehicle Invasive Inspections Required: None
  - Specialized Expertise (KSC): Requires KSC tech support for R&R and KSC Logistics support for transportation from KSC to LaRC.
  - Specialized Controls: None
- Transportation: Grd transportation from KSC to LaRC
- Storage: LaRC storage. Data pack requested, but no controlled/Bonded storage
- Future Support (JSC): None

JUSTIFICATION FOR ACTION – CRITERIA 1:

- LaRC engineers would like to have a shuttle leading edge panel available for future damage tolerance testing and analysis. The damage tolerance of RCC was found to be a critical issue during the Columbia accident investigation, but tests of RCC were limited because of the extreme scarcity of the material. With the ending of the shuttle program, there is an opportunity to better understand the response of RCC to impact and subsequent environmental degradation.

Note: Justification continues on pg 2 if required.

Orbiter/Shuttle H/W Retention and Inspection Proposals after End of Shuttle Program (STS-Last)

TF: Raju TDT: Structures PRIORITY NO: XX

HARDWARE / ACTION: Wing Leading Edge Panel- Removal and shipping to LaRC

JUSTIFICATION (continued):

- Although RCC, in its exact form, will likely not be used in future programs, the development of future thermal protection systems similar to RCC will benefit from understanding the damage mechanisms found in this material that has survived actual re-entry conditions

SCHEMATIC:

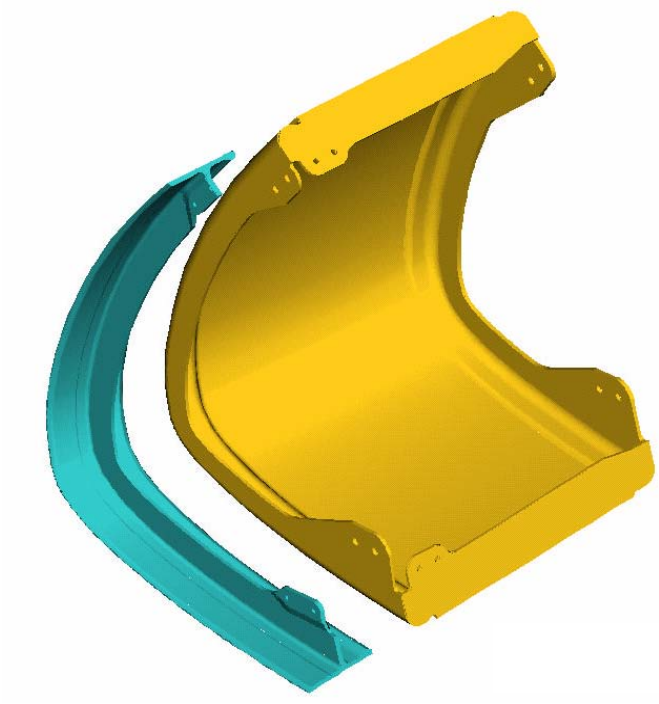

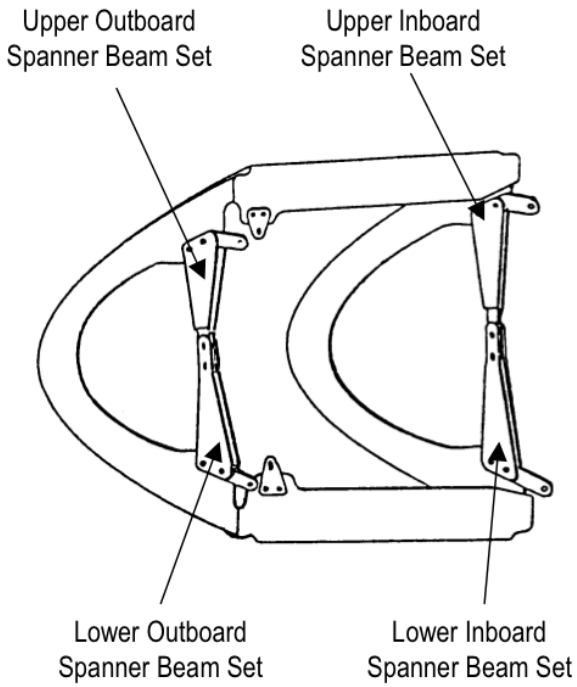

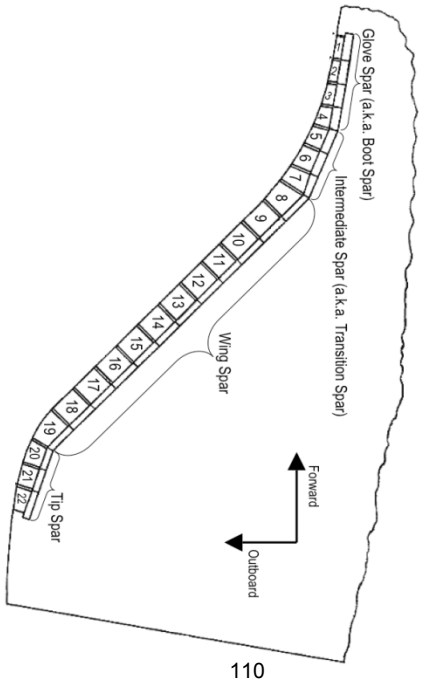

Orbiter/Shuttle H/W Retention and Inspection Proposals after End of Shuttle Program (STS-Last)

TF: Rickman TDT: Passive Thermal PRIORITY NO: XX

HARDWARE / ACTION DESCRIPTION:

- Remove set of 12 TPS tiles (flown, any mission, known heat rates)
- Supply set of 12 spare TPS tiles (un-flown, same locations as above)
- Optionally, supply set of ~30 spare tiles to keep in inventory for arc heater model construction and TPS testing (black, un-flown preferred)

NESC ENGINEERING COSTS / IMPACTS:

	LOW	MED	HIGH
VEHICLE ACTION COSTS:	X		
ESTIMATED TRANSPORTATION COSTS:	X		
ESTIMATED ANNUAL MAINTENANCE COSTS:	X		
ESTIMATED STORAGE VOLUME REQ'D:	X		

Criteria 1 – Hardware / vehicle structure that should be inspected or analyzed given its significant benefit for increasing/advancing the understanding of space hardware environment.
Criteria 2 - Hardware needed in support of a future space vehicle architecture (including hardware that can be used for subsystem development and/or Qual testing); or hardware with remaining life that could be incorporated into EA sponsored flight/test systems. .

ACTION / TRANSPORTATION / STORAGE REQMTS / FUTURE SUPPORT:

- Action: Hardware removal from vehicle
  - Difficulty of H/W Removal: Low difficulty – no special access required beyond normal OPF procedures
  - R&R Follow-on Actions: Replacement tile (or simulators) req'd to be installed after R&R (for display).
  - Vehicle Invasive Inspections Required: None
  - Specialized Expertise (KSC): Requires KSC tech support for R&R and KSC Logistics support for transportation from KSC to LaRC.
  - Specialized Controls: None
- Transportation: Grd transportation from KSC to LaRC
- Storage: LaRC storage, design data requested (environments for given locations)
- Future Support (JSC): None

JUSTIFICATION FOR ACTION – CRITERIA 2:

- LaRC thermal engineers do TPS design for many missions. It would be helpful in the future to have reference TPS tiles that had been flown on missions with known heat rates, to be able to refer to as standards. This could help in design, and in correlation to analysis.
- These tiles could also be used as heatshield structure for arc heater models, as LaRC engineers have done in the past. LaRC could also use the tiles as a backer for our flexible TPS testing instead of using carbon or balsa blocks. The shuttle tiles would be reusable for this purpose as they would not go over-temp.

Note: Justification continues on pg 2 if required.

Orbiter/Shuttle H/W Retention and Inspection Proposals after End of Shuttle Program (STS-Last)

TF: Rickman TDT: Passive Thermal PRIORITY NO: XX

HARDWARE / ACTION DESCRIPTION:

- Remove/Supply TCS MLI blanket assembly (both flown and virgin, ~3x3-ft if possible)

NESC ENGINEERING COSTS / IMPACTS:

	LOW	MED	HIGH
VEHICLE ACTION COSTS:	X		
ESTIMATED TRANSPORTATION COSTS:	X		
ESTIMATED ANNUAL MAINTENANCE COSTS:	X		
ESTIMATED STORAGE VOLUME REQ'D:	X		

Criteria 1 – Hardware / vehicle structure that should be inspected or analyzed given its significant benefit for increasing/advancing the understanding of space hardware environment.
Criteria 2 - Hardware needed in support of a future space vehicle architecture (including hardware that can be used for subsystem development and/or Qual testing); or hardware with remaining life that could be incorporated into EA sponsored flight/test systems. .

ACTION / TRANSPORTATION / STORAGE REQMTS / FUTURE SUPPORT:

- Action: Hardware removal from vehicle
  - Difficulty of H/W Removal: Low difficulty – no special access required beyond normal OPF procedures
  - R&R Follow-on Actions: Replacement blanket (or simulator) req'd to be installed after R&R (for display).
  - Vehicle Invasive Inspections Required: None
  - Specialized Expertise (KSC): Requires KSC tech support for R&R and KSC Logistics support for transportation from KSC to LaRC.
  - Specialized Controls: None
- Transportation: Grd transportation from KSC to LaRC
- Storage: LaRC storage
- Future Support (JSC): None

JUSTIFICATION FOR ACTION – CRITERIA 2:

- LaRC thermal engineers are designing TCS for systems related to inflatable entry vehicles. Having in-hand flown and virgin blankets will help make thermal design decisions for these missions.

Note: Justification continues on pg 2 if required.

Orbiter/Shuttle H/W Retention and Inspection Proposals after End of Shuttle Program (STS-Last)

TF: Rickman TDT: Passive Thermal PRIORITY NO: XX

HARDWARE / ACTION DESCRIPTION:

- Remove/Supply AFRSI blanket assembly (both flown and virgin, ~3x3-ft if possible)

NESC ENGINEERING COSTS / IMPACTS:

	LOW	MED	HIGH
VEHICLE ACTION COSTS:	X		
ESTIMATED TRANSPORTATION COSTS:	X		
ESTIMATED ANNUAL MAINTENANCE COSTS:	X		
ESTIMATED STORAGE VOLUME REQ'D:	X		

Criteria 1 – Hardware / vehicle structure that should be inspected or analyzed given its significant benefit for increasing/advancing the understanding of space hardware environment.
Criteria 2 - Hardware needed in support of a future space vehicle architecture (including hardware that can be used for subsystem development and/or Qual testing); or hardware with remaining life that could be incorporated into EA sponsored flight/test systems. .

ACTION / TRANSPORTATION / STORAGE REQMTS / FUTURE SUPPORT:

- Action: **Samples of flown material near coordinates:**
- V07T9522. (x,y,z of 658.2, -105.0, 358.3)
- V07T9253 (x,y,z=1005.1, -105.0, 353.0)
  - Areas on the FRCS would also be acceptable
- Supply local TC data from the flown mission as well (if available)
- Hardware removal from vehicle
  - Difficulty of H/W Removal: Low difficulty – no special access
  - R&R Follow-on Actions: Replacement AFRSI (or simulators) req'd to be installed after R&R (for Ferry Flt and display).
  - Vehicle Invasive Inspections Required: None
  - Specialized Expertise (KSC): Requires KSC tech support for R&R and KSC Logistics support for transport to LaRC.
  - Specialized Controls: None
- Transportation: Grd transportation from KSC to LaRC
- Storage: LaRC storage
- Future Support: None

JUSTIFICATION FOR ACTION – CRITERIA 2:

- LaRC thermal engineers are designing flexible TPS for many systems including inflatable entry systems. Having in-hand flown and virgin blankets will help make thermal design decisions for these missions.

Note: Justification continues on pg 2 if required.

Orbiter/Shuttle H/W Retention and Inspection Proposals after End of Shuttle Program (STS-Last)

TF: Rickman TDT: Passive Thermal PRIORITY NO: XX

HARDWARE / ACTION DESCRIPTION:

- Remove/Supply FRSI blanket assembly (both flown and virgin, ~3x3-ft if possible)

NESC ENGINEERING COSTS / IMPACTS:

	LOW	MED	HIGH
VEHICLE ACTION COSTS:	X		
ESTIMATED TRANSPORTATION COSTS:	X		
ESTIMATED ANNUAL MAINTENANCE COSTS:	X		
ESTIMATED STORAGE VOLUME REQ'D:	X		

Criteria 1 – Hardware / vehicle structure that should be inspected or analyzed given its significant benefit for increasing/advancing the understanding of space hardware environment.
Criteria 2 - Hardware needed in support of a future space vehicle architecture (including hardware that can be used for subsystem development and/or Qual testing); or hardware with remaining life that could be incorporated into EA sponsored flight/test systems. .

ACTION / TRANSPORTATION / STORAGE REQMTS / FUTURE SUPPORT:

- Action:
  - Remove samples of blanket below V07T9253, (~x,y,z of 1005.1, -105.0, 320.0)
  - Supply local TC data from the flown mission as well (if available)
- Hardware removal from vehicle
  - Difficulty of H/W Removal: Low difficulty – no special access
  - R&R Follow-on Actions: Replacement FRSI (or simulators) req'd to be installed after R&R (for Ferry Flt and display).
  - Vehicle Invasive Inspections Required: None
  - Specialized Expertise (KSC): Requires KSC tech support for R&R and KSC Logistics support for transport to LaRC.
  - Specialized Controls: None
- Transportation: Grd transportation from KSC to LaRC
- Storage: LaRC storage
- Future Support: None

JUSTIFICATION FOR ACTION – CRITERIA 2:

- LaRC thermal engineers are designing flexible TPS for many systems including inflatable entry systems. Having in-hand flown and virgin blankets will help make thermal design decisions for these missions.

Note: Justification continues on pg 2 if required.

Orbiter/Shuttle H/W Retention and Inspection Proposals after End of Shuttle Program (STS-Last)

TF: Murri TDT: Flight Mechanics PRIORITY NO: XX

HARDWARE / ACTION DESCRIPTION:

- Remove/Supply Rotational Hand Controller
  - Flight or Spare: MC621-0043-3047 rotational hand controller

NESC ENGINEERING COSTS / IMPACTS:

	LOW	MED	HIGH
VEHICLE ACTION COSTS:	X		
ESTIMATED TRANSPORTATION COSTS:	X		
ESTIMATED ANNUAL MAINTENANCE COSTS:	X		
ESTIMATED STORAGE VOLUME REQ'D:	X		

Criteria 1 – Hardware / vehicle structure that should be inspected or analyzed given its significant benefit for increasing/advancing the understanding of space hardware environment.
Criteria 2 - Hardware needed in support of a future space vehicle architecture (including hardware that can be used for subsystem development and/or Qual testing); or hardware with remaining life that could be incorporated into EA sponsored flight/test systems. .

ACTION / TRANSPORTATION / STORAGE REQMTS / FUTURE SUPPORT:

- Action:
  - Remove or supply spare MC621-0043-3047 rotational hand controller
- Hardware removal from vehicle
  - Difficulty of H/W Removal: Low difficulty – no special access or equipment, if removed from vehicle
  - R&R Follow-on Actions: None
  - Vehicle Invasive Inspections Required: None
  - Specialized Expertise (KSC): Requires KSC tech support for R&R and KSC Logistics support for transport to ARC.
  - Specialized Controls: None
- Transportation: Grd transportation from KSC to ARC
- Storage: ARC storage
- Future Support: None

JUSTIFICATION FOR ACTION – CRITERIA 2:

- Hand controller characteristics have a significant impact on the ease and precision with which pilots can accomplish specific tasks. Nine astronaut-in-the-loop studies of spacecraft tasks, including ISS docking, lunar landing and capsule re-entry, have been conducted at ARC and LaRC, but none have examined the effects of hand controller characteristics. Comparing Shuttle hand controllers to off-the-shelf components in simulation would help to identify requirements for controller characteristics of future space vehicles.

Note: Justification continues on pg 2 if required.

Orbiter/Shuttle H/W Retention and Inspection Proposals after End of Shuttle Program (STS-Last)

TF: Murri TDT: Flight Mechanics PRIORITY NO: XX

HARDWARE / ACTION DESCRIPTION:

- Remove/Supply Translational Hand Controller
  - Flight or Spare: MC621-0043-3140 translational hand controller

NESC ENGINEERING COSTS / IMPACTS:

	LOW	MED	HIGH
VEHICLE ACTION COSTS:	X		
ESTIMATED TRANSPORTATION COSTS:	X		
ESTIMATED ANNUAL MAINTENANCE COSTS:	X		
ESTIMATED STORAGE VOLUME REQ'D:	X		

Criteria 1 – Hardware / vehicle structure that should be inspected or analyzed given its significant benefit for increasing/advancing the understanding of space hardware environment.
Criteria 2 - Hardware needed in support of a future space vehicle architecture (including hardware that can be used for subsystem development and/or Qual testing); or hardware with remaining life that could be incorporated into EA sponsored flight/test systems. .

ACTION / TRANSPORTATION / STORAGE REQMTS / FUTURE SUPPORT:

- Action:
  - Remove or supply spare MC621-0043-3140 translational hand controller
- Hardware removal from vehicle
  - Difficulty of H/W Removal: Low difficulty – no special access or equipment, if removed from vehicle
  - R&R Follow-on Actions: None
  - Vehicle Invasive Inspections Required: None
  - Specialized Expertise (KSC): Requires KSC tech support for R&R and KSC Logistics support for transport to ARC.
  - Specialized Controls: None
- Transportation: Ground transportation from KSC to ARC
- Storage: ARC storage
- Future Support: None

JUSTIFICATION FOR ACTION – CRITERIA 2:

- Hand controller characteristics have a significant impact on the ease and precision with which pilots can accomplish specific tasks. Nine astronaut-in-the-loop studies of spacecraft tasks, including ISS docking, lunar landing and capsule re-entry, have been conducted at ARC and LaRC, but none have examined the effects of hand controller characteristics. Comparing Shuttle hand controllers to off-the-shelf components in simulation would help to identify requirements for controller characteristics of future space vehicles

Note: Justification continues on pg 2 if required.

Orbiter/Shuttle H/W Retention and Inspection Proposals after End of Shuttle Program (STS-Last)

TF: Rotter TDT: Active Thermal PRIORITY NO: XX

HARDWARE / ACTION DESCRIPTION:

- Remove/Supply Flash Evaporator System topping spray valve/nozzle assemblies (4 minimum)
  - Spares acceptable, part number: SV767675-2

NESC ENGINEERING COSTS / IMPACTS:

	LOW	MED	HIGH
VEHICLE ACTION COSTS:	X		
ESTIMATED TRANSPORTATION COSTS:	X		
ESTIMATED ANNUAL MAINTENANCE COSTS:	X		
ESTIMATED STORAGE VOLUME REQ'D:	X		

Criteria 1 – Hardware / vehicle structure that should be inspected or analyzed given its significant benefit for increasing/advancing the understanding of space hardware environment.
Criteria 2 - Hardware needed in support of a future space vehicle architecture (including hardware that can be used for subsystem development and/or Qual testing); or hardware with remaining life that could be incorporated into EA sponsored flight/test systems. .

ACTION / TRANSPORTATION / STORAGE REQMTS / FUTURE SUPPORT:

- Action:
  - Supply FES topping spray valve/nozzle assembly, spares acceptable
- Hardware removal from vehicle
  - Difficulty of H/W Removal: Spares
  - R&R Follow-on Actions: None
  - Vehicle Invasive Inspections Required: None
  - Specialized Expertise (KSC): Requires KSC Logistics support for transport to JSC.
  - Specialized Controls: Seal in contamination control bagging
- Transportation: Transportation from KSC to JSC
- Storage: JSC storage, provide data packs
- Future Support: None

JUSTIFICATION FOR ACTION – CRITERIA 1:

- Unique design: Valves designed to prevent a last drop leak after closing. The nozzle provides a circular spray pattern

FES Topping Valve Module

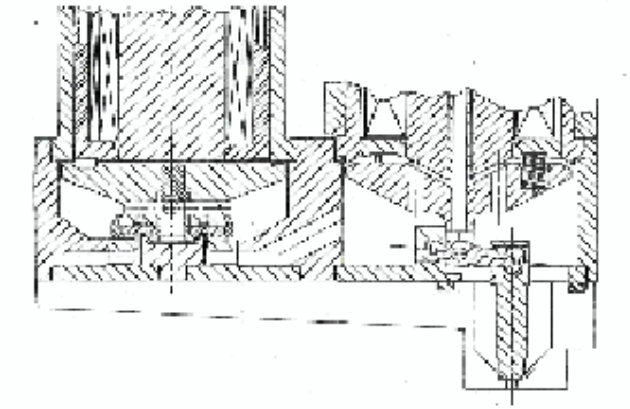

Note: Justification continues on pg 2 if required.

Orbiter/Shuttle H/W Retention and Inspection Proposals after End of Shuttle Program (STS-Last)

TF: Rotter TDT: Active Thermal PRIORITY NO: XX

HARDWARE / ACTION DESCRIPTION:

- In-place internal inspection of NH3 Tanks, & NH3 tubing for corrosion. Remove & ship the relief, flow isolation & flow control valves for detail inspection
  - Borescope the NH3 tanks & tubing for corrosion
  - Remove NH3 relief, isolation and fcv's from a vehicle

NESC ENGINEERING COSTS / IMPACTS:

	LOW	MED	HIGH
VEHICLE ACTION COSTS:		X	
ESTIMATED TRANSPORTATION COSTS:	X		
ESTIMATED ANNUAL MAINTENANCE COSTS:	X		
ESTIMATED STORAGE VOLUME REQ'D:	X		

Criteria 1 – Hardware / vehicle structure that should be inspected or analyzed given its significant benefit for increasing/advancing the understanding of space hardware environment.
Criteria 2 - Hardware needed in support of a future space vehicle architecture (including hardware that can be used for subsystem development and/or Qual testing); or hardware with remaining life that could be incorporated into EA sponsored flight/test systems. .

ACTION / TRANSPORTATION / STORAGE REQMTS / FUTURE SUPPORT:

- Action:
- Borescope the NH3 tanks and tubing for corrosion
- Remove relief valve, iso valve and flow control valve from a vehicle
- Difficulty of H/W Removal: Low
- R&R Follow-on Actions: None
- Vehicle Invasive Inspections Required: Borescope inspect Ammonia Tanks and tubing
- Specialized Expertise (KSC): KSC technicians and quality with borescope skills
- Specialized Controls: Integrity seal hardware for shipment
- Transportation: Ground transport from KSC to JSC
- Storage: Store at JSC
- Future Support: None

JUSTIFICATION FOR ACTION – CRITERIA 1:

- These tanks and iso valves have never been inspected internally, valuable data point for ISS. Materials compatibly to NH3 for ISS

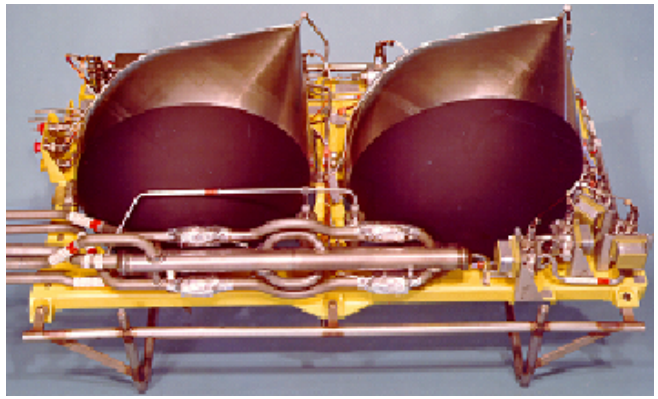

Note: Justification continues on pg 2 if required.

Orbiter/Shuttle H/W Retention and Inspection Proposals after End of Shuttle Program (STS-Last)

TF: Rotter TDT: ECLSS PRIORITY NO: XX

HARDWARE / ACTION DESCRIPTION:

- Supply 2 spare hydrogen separators
  - There are 2 hydrogen separators in spares, part number: MC250-0009-0001

NESC ENGINEERING COSTS / IMPACTS:

	LOW	MED	HIGH
VEHICLE ACTION COSTS:			
ESTIMATED TRANSPORTATION COSTS:	X		
ESTIMATED ANNUAL MAINTENANCE COSTS:	X		
ESTIMATED STORAGE VOLUME REQ'D:	X		

Criteria 1 – Hardware / vehicle structure that should be inspected or analyzed given its significant benefit for increasing/advancing the understanding of space hardware environment.
Criteria 2 - Hardware needed in support of a future space vehicle architecture (including hardware that can be used for subsystem development and/or Qual testing); or hardware with remaining life that could be incorporated into EA sponsored flight/test systems. .

ACTION / TRANSPORTATION / STORAGE REQMTS / FUTURE SUPPORT:

- Action:
- Supply 2 spare hydrogen separators
- Difficulty of H/W Removal: N/A
- R&R Follow-on Actions: None
- Vehicle Invasive Inspections Required: None
- Specialized Expertise (KSC): None
- Specialized Controls: None
- Transportation: Transport from KSC to JSC
- Storage: Environmentally controlled, supply data packs
- Future Support: None

JUSTIFICATION FOR ACTION – CRITERIA 1:

- This is a unique design. There is no vendor who makes these units, or who has the knowledge to build a like design. Separates H2 through silver palladium tubes

119

Note: Justification continues on pg 2 if required.

Orbiter/Shuttle H/W Retention and Inspection Proposals after End of Shuttle Program (STS-Last)

TF: Rotter TDT: Active Thermal PRIORITY NO: XX

HARDWARE / ACTION DESCRIPTION:

- Remove & ship 2 stainless steel avionics bay cold plates (from 2 different avionics bays) from OV-103 that have flown every flight

NESC ENGINEERING COSTS / IMPACTS:

	LOW	MED	HIGH
VEHICLE ACTION COSTS:		X	
ESTIMATED TRANSPORTATION COSTS:	X		
ESTIMATED ANNUAL MAINTENANCE COSTS:	X		
ESTIMATED STORAGE VOLUME REQ'D:	X		

Criteria 1 – Hardware / vehicle structure that should be inspected or analyzed given its significant benefit for increasing/advancing the understanding of space hardware environment.
Criteria 2 - Hardware needed in support of a future space vehicle architecture (including hardware that can be used for subsystem development and/or Qual testing); or hardware with remaining life that could be incorporated into EA sponsored flight/test systems. .

ACTION / TRANSPORTATION / STORAGE REQMTS / FUTURE SUPPORT:

- Action:
- Remove & ship 2 avionics bay cold plates (from different avionics bays) from OV-103 that have flown every flight
- Difficulty of H/W Removal: Medium
- R&R Follow-on Actions: None
- Vehicle Invasive Inspections Required: None
- Specialized Expertise (KSC): KSC technicians with experience removing cold plates
- Specialized Controls: Integrity seal hardware for shipment
- Transportation: Ground transport from KSC to JSC
- Storage: Store at JSC
- Future Support: None

JUSTIFICATION FOR ACTION – CRITERIA 1:

- There has been silting generated within the steel cold plates and it's likely that most of the silt remained in cold plates, in the non-flow areas of the plates. There has only been one set of plates looked into in the late 1990's. Need another look for corrosion or for anything else that might have occurred in the cold plates for future long deep space missions.

Note: Justification continues on pg 2 if required.

Orbiter/Shuttle H/W Retention and Inspection Proposals after End of Shuttle Program (STS-Last)

TF: Garcia TDT: Propulsion PRIORITY NO: XX

HARDWARE / ACTION DESCRIPTION:

- Supply fleet leader Primary RCS Thrusters (qty. 16)

NESC ENGINEERING COSTS / IMPACTS:

	LOW	MED	HIGH
VEHICLE ACTION COSTS:			
ESTIMATED TRANSPORTATION COSTS:			
ESTIMATED ANNUAL MAINTENANCE COSTS:			X
ESTIMATED STORAGE VOLUME REQ'D:			X

Criteria 1 – Hardware / vehicle structure that should be inspected or analyzed given its significant benefit for increasing/advancing the understanding of space hardware environment.
Criteria 2 - Hardware needed in support of a future space vehicle architecture (including hardware that can be used for subsystem development and/or Qual testing); or hardware with remaining life that could be incorporated into EA sponsored flight/test systems. .

ACTION / TRANSPORTATION / STORAGE REQMTS / FUTURE SUPPORT:

- Action:
- Supply fleet leader Primary RCS Thrusters (qty. 16)
- Difficulty of H/W Removal: N/A
- R&R Follow-on Actions: None
- Vehicle Invasive Inspections Required: None
- Specialized Expertise (KSC): None
- Specialized Controls: None
- Transportation: Already at WSTF
- Storage: As currently stored, supply data packs
- Future Support: None

JUSTIFICATION FOR ACTION – CRITERIA 2:

- Future Project Application: NESC's Max Launch Abort System (MLAS) pad abort test vehicle #2 that includes primary objective of demonstrating active control with a liquid propulsion attitude control system (ACS). Fleet leader Primary RCS thrusters potentially fulfill this need.

Note: Justification continues on pg 2 if required.

Orbiter/Shuttle H/W Retention and Inspection Proposals after End of Shuttle Program (STS-LAST)

TF: Garcia TDT: Propulsion PRIORITY NO: XX

HARDWARE / ACTION DESCRIPTION:

- **MPS Helium Propellant Management System Hardware**
- Remove from OV-TBD & OV-TBD.
- Includes 2 pneumatic panels (w/ filter, iso valves, check valve, regulator, relief valve, pressure transducers, mounting panel, rope vib. isolators, mech. fittings, elec. connectors, etc.), low pressure cross-over valve, and 2 COPVs (w/ temp sensors, mounting brackets/struts, mech. fittings, etc.).
- Provide all hardware data packages and interfacing ancillary h/w

NESC ENGINEERING COSTS / IMPACTS:

	LOW	MED	HIGH
VEHICLE ACTION COSTS:		X	
ESTIMATED TRANSPORTATION COSTS:		X	
ESTIMATED ANNUAL MAINTENANCE COSTS:		X	
ESTIMATED STORAGE VOLUME REQ'D:		X	

Criteria 1 – Hardware / vehicle structure that should be inspected or analyzed given its significant benefit for increasing/advancing the understanding of space hardware environment.
Criteria 2 - Hardware needed in support of a future space vehicle architecture (including hardware that can be used for subsystem development and/or Qual testing); or hardware with remaining life that could be incorporated into EA sponsored flight/test systems. .

ACTION / TRANSPORTATION / STORAGE REQMTS / FUTURE SUPPORT:

- Action: Remove hardware from OV-TBD & OV-TBD.
- Vehicle Invasive Inspections Required: None.
- Specialized Expertise (KSC): Requires KSC tech support for R&R and KSC Logistics support storage/transportation to JSC/WSTF.
- Specialized Controls: None.
- Transportation: Ground transportation to JSC/WSTF.
- Storage (JSC/WSTF): Controlled storage.
- Future Support (JSC): NESC's MLAS project.

JUSTIFICATION FOR ACTION – CRITERIA 2 :

- Future Project Application: NESC's Max Launch Abort System (MLAS) pad abort test vehicle #2 that includes primary objective of demonstrating active control with a liquid propulsion attitude control system (ACS). ACS needs a high pressure, high flow helium pressurization system. Industry research indicates the helium pressurization hardware will be longest schedule lead and have aggregate cost in the millions. This presents risk to the project.
- Risk can be alleviated by leveraging Orbiter's MPS helium prop mgmt. system 750psi control components and 4500psi helium COPVs:
  - Two PMS Control Panel 4 (P/N V070-415752-001), including:
    - Filter (P/N ME286-0056-0001)
    - Iso Valves (P/N MC284-0403-0001)
    - 750 psi Regulator (P/N MC284-0533-0006)
    - Relief Valve (P/N MC284-0398-0004)
    - Check Valve (P/N ME-284-0472-0004)
    - High Pressure Sensor (P/N TBD) if available
    - Low Pressure Sensor (P/N TBD) if available
    - Rope vib. isolators, mech fittings, elec. connectors, etc.
  - One Low Pressure Cross Over Valve (P/N MC284-0403-0003)
  - Two 4.7 ft3 COPV (P/N MC282-0082-0010), including:
    - Internal Temp Sensor (P/N ME449-0156-0002)
    - Mounting Brackets/Struts (P/N TBD)

Orbiter/Shuttle H/W Retention and Inspection Proposals after End of Shuttle Program (STS-LAST)

TF: Garcia TDT: Propulsion PRIORITY NO: XX

HARDWARE/ACTION: Remove **MPS Helium Propellant Mgmt System Hardware** for MLAS ACS application

JUSTIFICATION (continued):

SCHEMATIC: Photo of MPS Helium Test Stand & PMS Panel 4

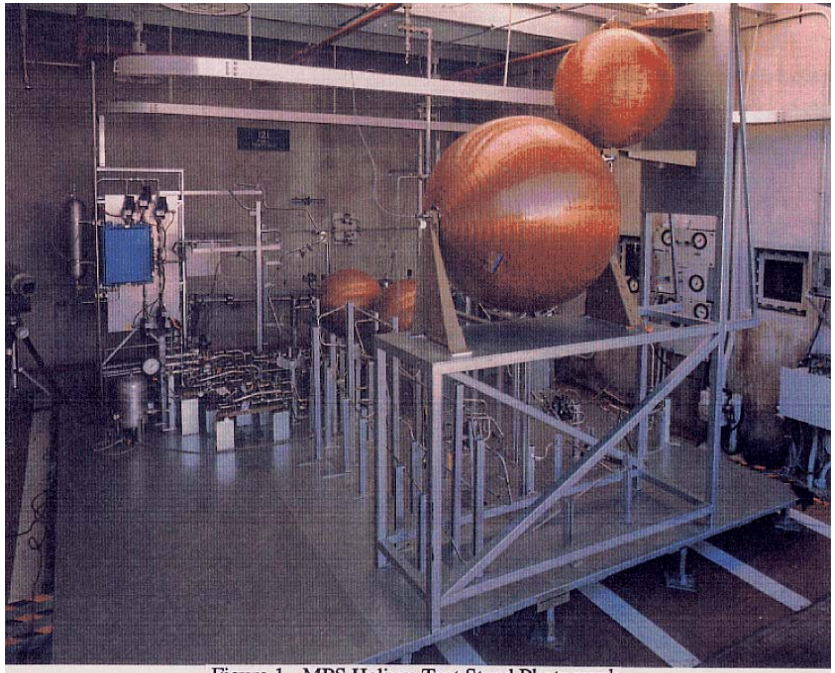

Figure 1 - MPS Helium Test Stand Photograph

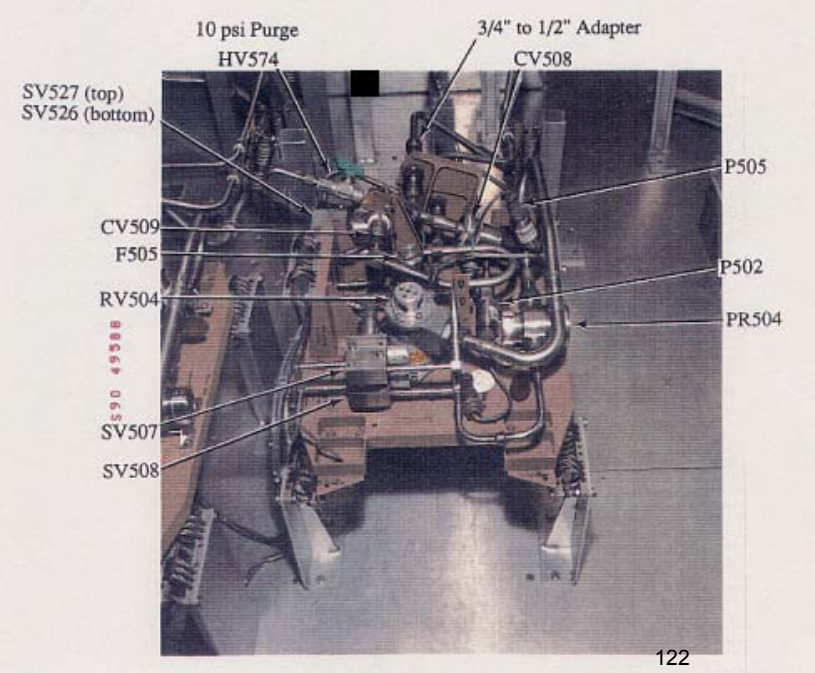

WSTF/White Sands Testing Facility

(Redlines to EP Quad Charts)

STS-LAST Hardware Retention Proposal

Quad Charts

EA Shuttle Hardware Retention Effort
Post STS-LAST

Top List from WSTF

Category 1: Knowledge Capture

1. APU Diaphragm Tanks (shared with EP)
2. MPS Flow Control Valves (shared with EP)
3. PRSD Tanks (shared with EP)
4. COPV Carbon Tanks (quad chards would need to be developed)

Category 2: Future Use

1. RCS Thrusters (Primary and Verniers – KSC Spares) (shared with EP)
2. OMS Engine (Spares) (shared with EP)

Orbiter/Shuttle H/W Retention and Inspection Proposals after End of Shuttle Program (STS-LAST)

DCE/NSE/DIV: Jones/Durning/EP | PRT: OMS/RCS | DIVISION PRIORITY NO: 2

HARDWARE / ACTION DESCRIPTION:

RCS Thrusters

- Obtain 36 spare Primary and 12 spare Vernier Reaction Control Thrusters from Spares Inventory.
- Obtain data packs for components.
- Transport PRCS/VRCS Spares to storage facility.

JSC-ENGINEERING COSTS / IMPACTS:

	LOW	MED	HIGH
VEHICLE ACTION COSTS:	X		
ESTIMATED TRANSPORTATION COSTS:		X	
ESTIMATED ANNUAL MAINTENANCE COSTS:	X		
ESTIMATED STORAGE VOLUME REQ'D:		X	

Criteria 1 – Hardware / vehicle structure that should be inspected or analyzed given its significant benefit for increasing/advancing the understanding of space hardware environment.
Criteria 2 - Hardware needed in support of a future space vehicle architecture (including hardware that can be used for subsystem development and/or Qual testing); or hardware with remaining life that could be incorporated into EA sponsored flight/test systems. .

ACTION / TRANSPORTATION / STORAGE REQMTS / FUTURE SUPPORT:

- Action: No vehicle hardware removal is requested.
  - Difficulty of H/W Removal: Not Applicable – Parts are in Spares.
  - R&R Follow-on Actions: None.
  - Vehicle Invasive Inspections Required: None.
  - Specialized Expertise (KSC): None.
  - Specialized Controls: None.
- Transportation: Standard RCS thruster shipping and storage container. Ground transportation to storage location.
- Storage (WSTF): Bond/Controlled Storage. No environmental control. Maintain flight readiness configuration of spares.
- Future Support (JSC): Future Programs
  - EP MLAS2 group has expressed interest to obtain 16+ PRCS Thrusters.
  - Potential use on Shuttle Derived programs.

JUSTIFICATION FOR ACTION – CRITERIA 2 :

- OMS/RCS PRT has historically received requests for transfer of thrusters to new programs for development and qualification testing. Thrusters represent significant costs and engineering time to develop and on-hand assets will allow for efficient response to pathfinder program requests.
- Currently have requests from future programs to reuse these assets for development testing.

Note: Justification continues on pg 2 if required.

Orbiter/Shuttle H/W Retention and Inspection Proposals after End of Shuttle Program (STS-LAST)

DCE/NSE/DIV: Jones/Durning/EP | PRT: OMS/RCS | DIVISION PRIORITY NO: 7

HARDWARE / ACTION DESCRIPTION:

OMS Engines

- Obtain 5 spare OMS Engines (2 at KSC, 3 at WSTF) and 6 Spare Nozzles from Spares Inventory.
- Obtain data packs for components.
- Transport OMS Engines/Nozzles Spares/Data Packs to storage facility.

JSC-ENGINEERING COSTS / IMPACTS:

	LOW	MED	HIGH
VEHICLE ACTION COSTS:	X		
ESTIMATED TRANSPORTATION COSTS:			X
ESTIMATED ANNUAL MAINTENANCE COSTS:	X		
ESTIMATED STORAGE VOLUME REQ'D:			X

Criteria 1 – Hardware / vehicle structure that should be inspected or analyzed given its significant benefit for increasing/advancing the understanding of space hardware environment.
Criteria 2 - Hardware needed in support of a future space vehicle architecture (including hardware that can be used for subsystem development and/or Qual testing); or hardware with remaining life that could be incorporated into EA sponsored flight/test systems. .

ACTION / TRANSPORTATION / STORAGE REQMTS / FUTURE SUPPORT:

- Action: No vehicle hardware removal is requested.
  - Difficulty of H/W Removal: Not Applicable – Parts are in Spares.
  - R&R Follow-on Actions: None.
  - Vehicle Invasive Inspections Required: None.
  - Specialized Expertise (KSC): None.
  - Specialized Controls: None.
- Transportation: Standard OMS Engine/Nozzle shipping and storage container. Ground transportation to storage location. Potential to reduce transportation cost by sharing ground transportation with RCS thrusters.
- Storage (WSTF): Bond/Controlled Storage. No environmental control. Maintain flight readiness configuration of spares.
- Future Support (JSC): Future Programs
  - EP Currently has request from PCAD to obtain 1 OMS Nozzle.
  - Potential use on Shuttle Derived programs.

JUSTIFICATION FOR ACTION – CRITERIA 2 :

- OMS/RCS PRT has historically received requests for transfer of OMS Engines to new programs for development and qualification testing. Engines represent significant costs and engineering time to develop and on-hand assets will allow for efficient response to pathfinder program requests.
- Currently have requests from future programs to reuse these assets for development testing.

Note: Justification continues on pg 2 if required.

Orbiter/Shuttle H/W Retention and Inspection Proposals after End of Shuttle Program (STS-LAST)

DCE/NSE/DIV: Jones/Hernandez/EP PRT: APU DIVISION PRIORITY NO: 3

HARDWARE / ACTION DESCRIPTION:

- **Orbiter APU Diaphragm Tanks**
  - Remove and decontaminate 3 APU Tanks from each vehicle (covered by T&R activities) – 9 Total
  - Remove 3 APU Water Tanks from each vehicle - 9 Total
  - Transport 9 vehicle APU Tanks, 9 APU Water Tanks plus 2 KSC APU Tank Spares to storage facility (JSC/WSTF).
  - Inspect the Fleet Leader APU Fuel Tanks.
  - Provide all Hardware Data Packages.

JSC-ENGINEERING COSTS / IMPACTS:

	LOW	MED	HIGH
VEHICLE ACTION COSTS:	X*		
ESTIMATED TRANSPORTATION COSTS:		X	
ESTIMATED ANNUAL MAINTENANCE COSTS:	X		
ESTIMATED STORAGE VOLUME REQ'D:			X

*Covered under T&R (ESSRD)

Criteria 1 – Hardware / vehicle structure that should be inspected or analyzed given its significant benefit for increasing/advancing the understanding of space hardware environment.
Criteria 2 - Hardware needed in support of a future space vehicle architecture (including hardware that can be used for subsystem development and/or Qual testing); or hardware with remaining life that could be incorporated into EA sponsored flight/test systems. .

ACTION / TRANSPORTATION / STORAGE REQMTS / FUTURE SUPPORT:

- Action: Hardware removal from vehicle + spares
  - Difficulty of H/W Removal: Hardware removal and safing is covered by T&R activities. Dynatube Fittings.
  - R&R Follow-on Actions: Decontaminate, shipment.
  - Vehicle Invasive Inspections Required: None. Standard Tank removal.
  - Specialized Expertise (KSC): Requires KSC tech support for R&R and KSC Logistics support for transportation from KSC to JSC/WSTF. WSTF has previous experience performing analysis on diaphragm.
  - Specialized Controls: Decontamination covered by T&R.
- Transportation: Standard transportation from KSC to JSC/WSTF.
- Storage (JSC): Bond/Controlled Storage. No environmental control.
- Future Support (JSC):
  - JSC-M&P and NSE: NDE, overall external inspection, possible dissasembly and inspection of Fleet Leader Tank to look at the tank shell and AF-E-332 diaphragm conditions.

JUSTIFICATION FOR ACTION – CRITERIA 1&2

- Orbiter APU's have potential use in future programs.
  - Diaphragm material (AF-E-332) is no longer manufactured.
  - Tanks are difficult to manufacture with long lead times (>>1 yr).
  - All spacecraft monopropellant hydrazine systems in history have utilized similar type of diaphragm tanks (e.g., Pioneer, Viking, Voyager, IUS, Cassini, etc. Ref: AIAA 95-2534).
- Orbiter APU Tanks have the longest age and cycle life flight history of all hydrazine tanks used, including commercial use.
  - Inspection data is extremely valuable for other hydrazine tanks used in manned and un-manned space applications.

Note: Justification continues on pg 2 if required.

Orbiter/Shuttle H/W Retention and Inspection Proposals after End of Shuttle Program (STS-LAST)

DCE/NSE/DIV: Jones/Hernandez/EP PRT: APU DIVISION PRIORITY NO: 3

HARDWARE/ACTION: Orbiter APU Diaphragm Tanks – R&R and ship Tanks.

JUSTIFICATION (continued):

- A complete detailed inspection will expand the existing historical database by comparing against 2 other tanks previously inspected at 11 yrs and 25 yrs (Note: data is used by Industry. Reference: AIAA 95-2534).
  - Tank shell: Complete visual inspection, hardness testing, thickness measurements, metallographic analysis (conventional, scanning electron microscopy, (SEM)), and electron spectroscopy for chemical analysis (EASCA).
  - Diaphragm: visual inspection, microscopic analysis, thickness measurements, hardness testing, specific gravity, tensile testing, chemical analysis and thermal gravimetric analysis (TGA). WSTF has performed these analyses in the past.
- Quantifying the amount of hydrazine permeation through the diaphragm would provide valuable data for analytical models.
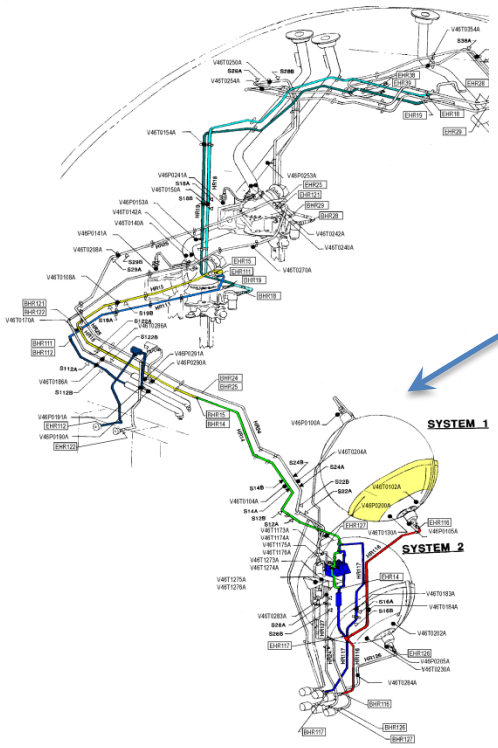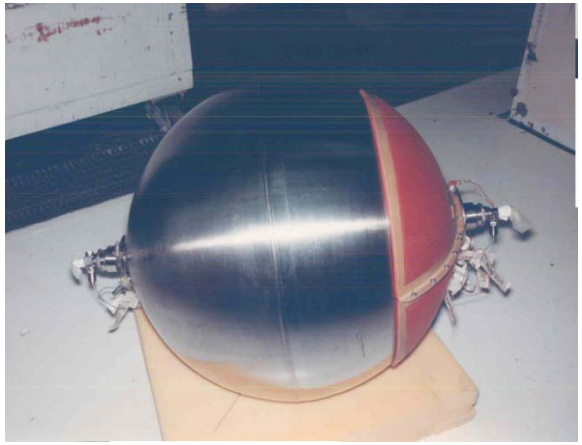
SCHEMATIC: